MEMORANDUM

Planning Department

Date: November 16, 2023
To: Zoning Administrator
From: Randy Baez, Associate Planner

Subject: **NEW DETACHED ACCESSORY DWELLING UNIT (P-MS23-0123)** – A Minor Site Development (MSD) Permit to develop a 1,083 square-foot, two-story, detached Accessory Dwelling Unit (ADU) up to 21 feet, 7 inches in height, within the rear yard of an existing 1,856 square-foot single-family dwelling on an 0.2-acre site in the R1-6 Single-Family Residential Zoning District located at 2387 Mattos Drive. Zoning Administrator approval is required for ADU'S over 1,000 square feet in size and over 20 feet in height. The project is categorically exempt from environmental review under the California Environmental Quality Act (CEQA) pursuant to CEQA Guidelines Section 15303 (Construction or Conversion of Small Structures).

Location: 2387 Mattos Dr. (APN: 8839031)

Zoning/GP: Single-Family Residential (R1-6) / Low Density Residential (LDR)

Application:

On June 12, 2023, Jake Dacy (on behalf of the property owner) submitted a Minor Site Development (MSD) Permit application to develop a two-story, 1,083 square-foot detached Accessory Dwelling Unit (ADU) within the rear yard of the 0.2-acre site. No improvements are proposed for the existing 1,856 square-foot single-family home at this time.

The proposed ADU will feature an 84 square-foot porch, 672 square feet of living space on the first floor and 327 square feet of living space on the second floor. Per Milpitas Municipal Code (MMC) Table XI-10-57.03(C)(2)(c), ADUs over 1,000 square feet in size and over 20 feet in height are subject to approval from the Zoning Administrator through an MSD Permit.

Due to Building & Safety requirements, the proposed ADU was given the address of 2387 Mattos Drive, while the address for the main dwelling is 2383 Mattos Drive.

The Project site is surrounded by residential uses to the north, south, east, and west, as demonstrated in Map 1: Project Zoning and Map 2: Aerial View.

Map 1: Project Zoning

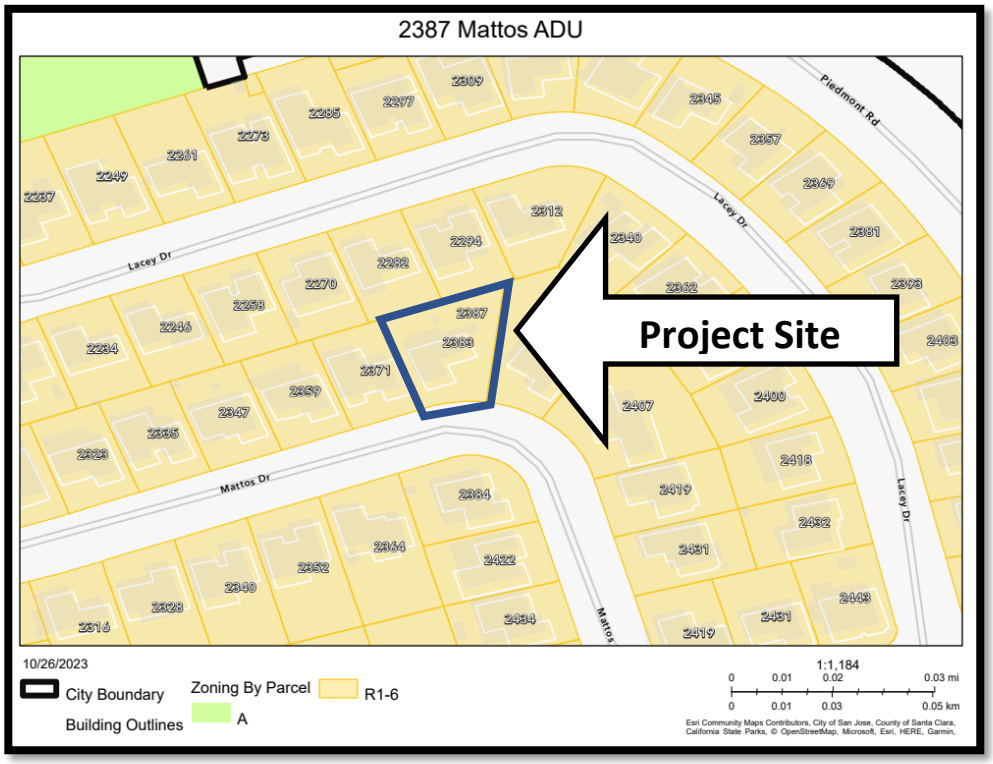

Map 2: Aerial View

Table 1: Surrounding Zoning and Land Uses

	General Plan	Zone	Uses
Subject Site	Low Density Residential (LDR)	Single Family Residential (R1-6)	Single-Family Residential
North	Low Density Residential (LDR)	Single Family Residential (R1-6)	Single-Family Residential
South	Low Density Residential (LDR)	Single Family Residential (R1-6)	Single-Family Residential
East	Low Density Residential (LDR)	Single Family Residential (R1-6)	Single-Family Residential
West	Low Density Residential (LDR)	Single Family Residential (R1-6)	Single-Family Residential

Project Details

The 1,083 square-foot detached Accessory Dwelling Unit (ADU) is proposed in the northeast corner of the property. The ADU will feature a first floor of 672 square feet and 327 square feet on the second floor. No parking spaces would be required for the ADU, and no changes are proposed for the main dwelling. *Figure 1*: *Site Plan* shows the location of the proposed enclosure.

Figure 1: Site Plan

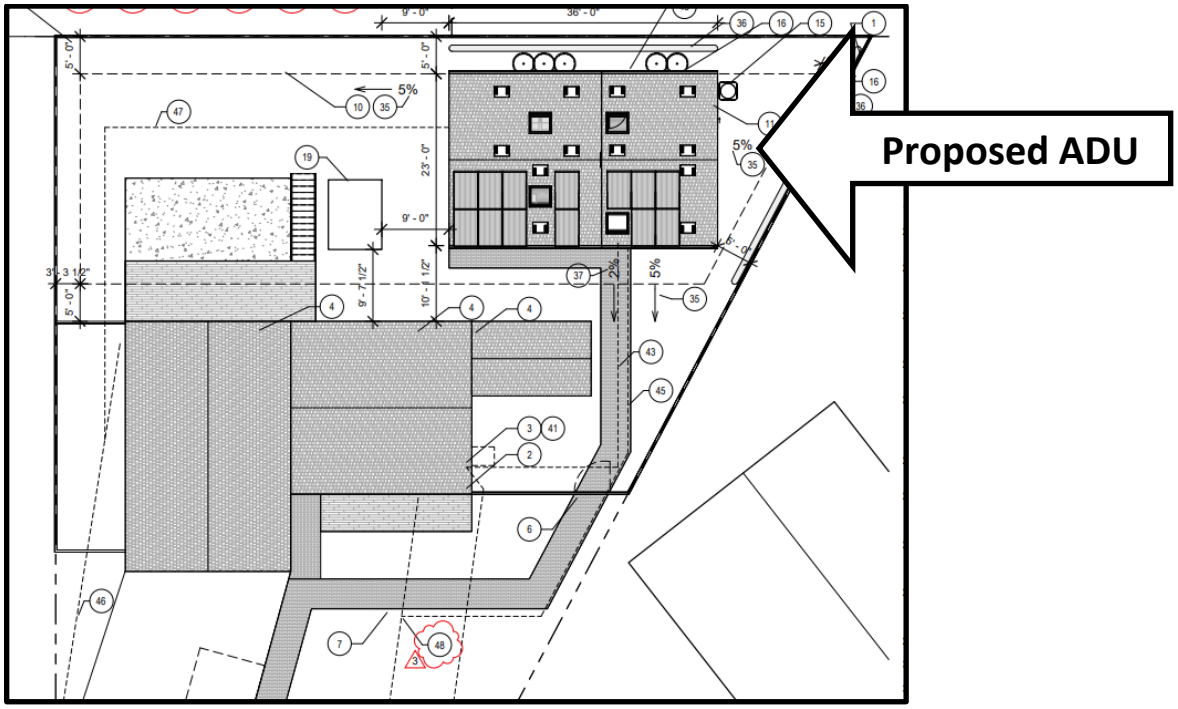

Analysis

The project site is in the Single Family Residential (R1-6) Zoning District and complies with most of the development standards of MMC Sec. XI-10-13.08 (ADU Regulations) as shown in *Table 2.* Detached ADUs with two bedrooms can be up to 1,000 square feet in size and 20 feet in height with limited review. The proposed ADU is 1,083 square feet and over 21 feet, 6 inches in height, which requires Zoning Administrator review per MMC Sec. XI-10-13.08-I.

Table 2: Detached ADU Development Standards

Standards	Required/Maximum	Proposed	Complies
Front Setback	20 feet	Approximately 90 feet	Yes
Side Yard Setback	4 feet	5 feet	Yes
Rear Yard Setback	4 feet	5 feet	Yes
Setback to Other Structures	6 feet	10 feet, 1.5 inches	Yes
Building Height	16 feet, up to 20 feet*	21 feet, 6.5 inches	No**
Building Size	1,000	1,068	No**
*	Building height allowed up to 18 feet if located within one-half mile walking distance of a major transit stop or a high-quality transit corridor; and allowed up to 20 feet if needed to accommodate a roof pitch on the ADU to match existing dwelling		
**	Requires Zoning Administrator approval		

Colors and Materials

The proposed ADU will feature a gray plaster exterior and asphalt shingle roof to match the existing single-family dwelling. The existing single-family dwelling, along with others within the vicinity, are currently two-story structures, which is consistent with the proposed detached two-story ADU. In order to preserve the privacy of the property and neighboring properties, frosted glass windows will be installed on the second story. *Figures 2 and 3* show the proposed floor plan, and *Figures 4 and 5* show the proposed elevations.

Figure 2: 1st Floor Plan

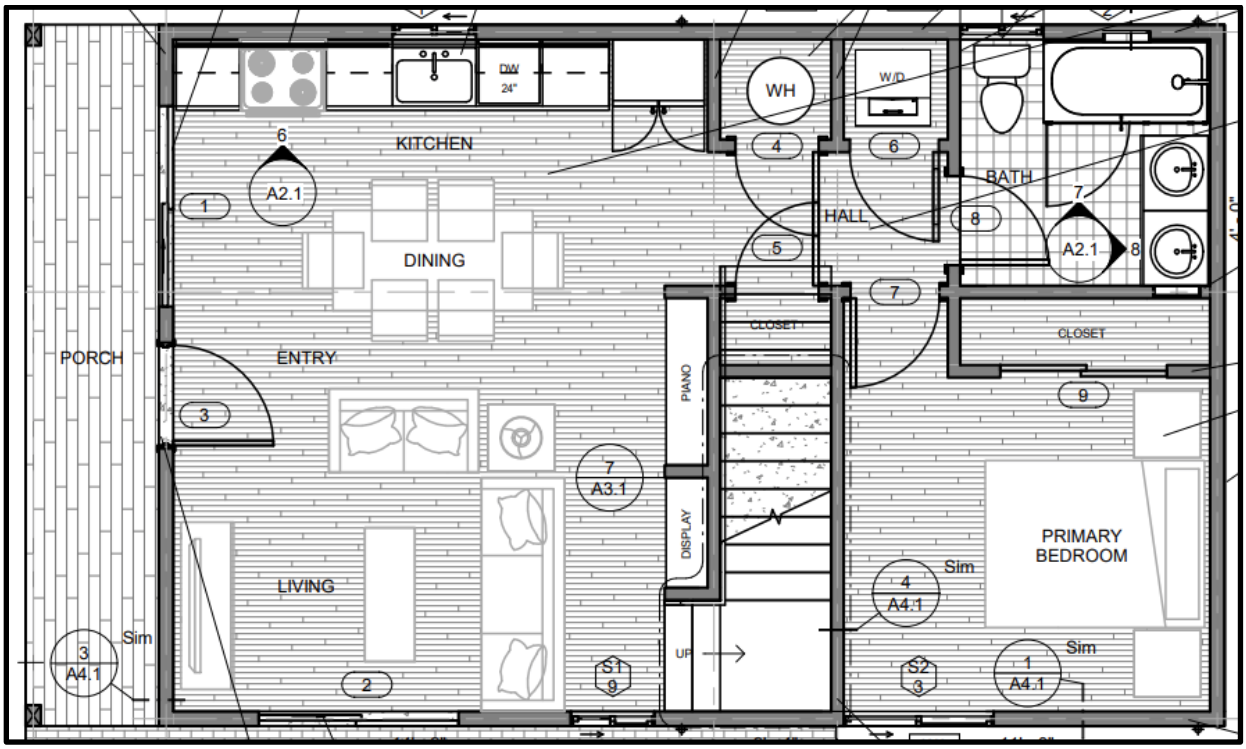

Figure 3: 2nd Floor Elevation

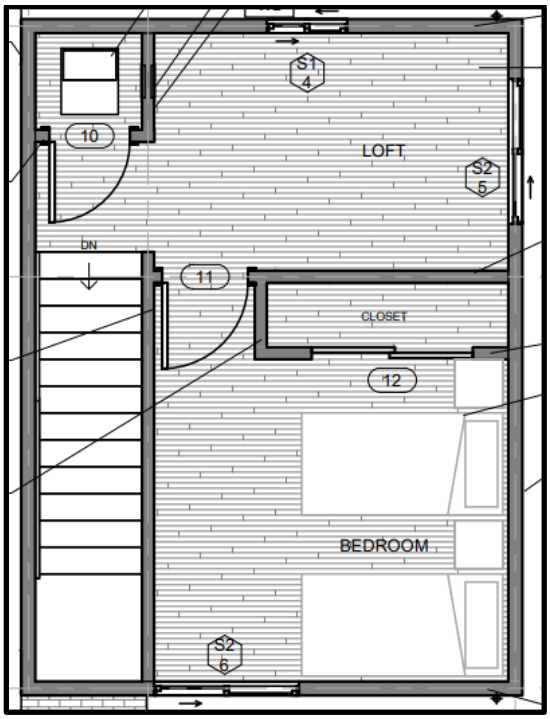

Figure 4: Front Elevation

Figure 5: Rear Elevation

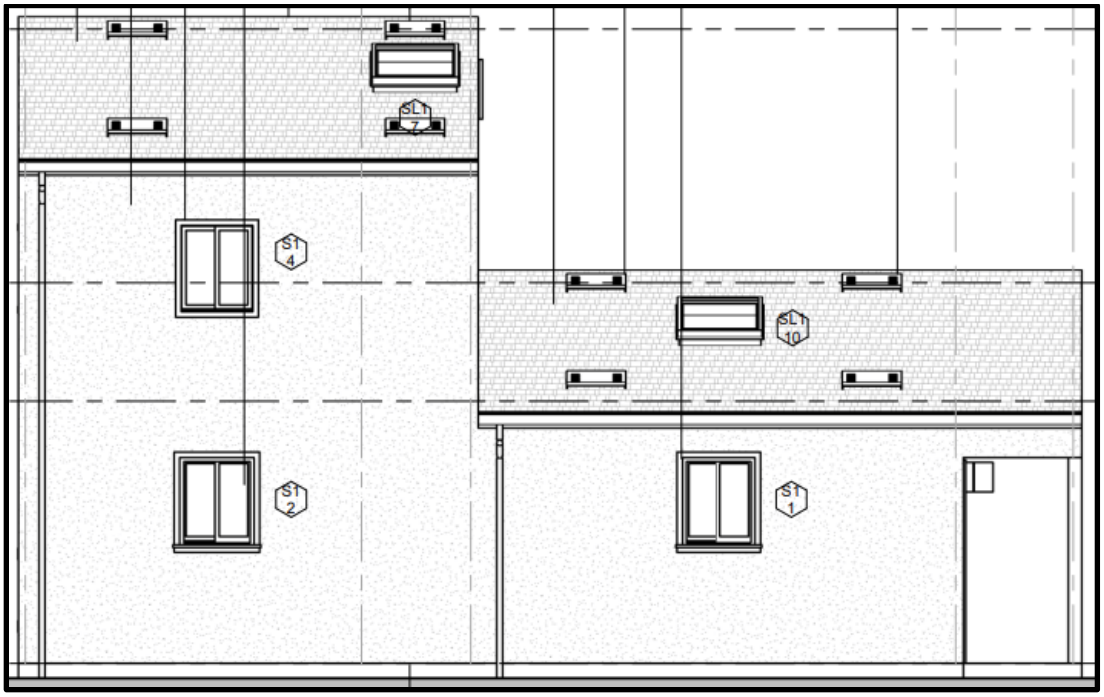

Parking
Due to the project being located within one-half mile walking distance of public transit, no additional parking is required for the ADU. No other alterations are proposed for the main dwelling at this time. The property currently has a two-car garage and a driveway that can safely accommodate two vehicles for a total of 4 parking spaces. The site will remain compliant with MMC Sec. XI-10-53 (parking standards).

Landscaping
The applicant proposes to install vertical screening evergreen landscaping between the ADU and the two nearest residences to the north and east. This new landscaping will help provide additional privacy by creating a landscaped buffer between the residences. No trees need to be removed to develop this project.

Zoning Conformance
As proposed, the project and associated use are consistent with the purpose and intent of the Single Family Residential (R1-6) zoning district, which is intended to *"stabilize and protect the residential characteristics of the District and to promote and encourage a suitable environment for family life. The R1 District is intended for the suburban family home and the services appurtenant thereto,"* per MMC Sec. XI-10-4.01.

<u>Findings for Approval:</u>

In accordance with Section XI-10-57.03(G) of the Milpitas Municipal Code, the Zoning Administrator may consider and approve a Minor Site Development if the required findings can be made. Findings shall identify the rationale behind the decision to take a certain action and are analyzed below:

1. *The development recognizes and respects the nature of the neighborhood and site, development patterns, materials used, and the expectations of those who will see and use the building;*

   The project is minimally visible to vehicles and pedestrians from the public right-of-way. The ADU has a proposed building height of 21 feet, 6.5 inches below the maximum height allowed within the R1-6 Zoning District. The two-story ADU is designed to be consistent with the main dwelling and other nearby residential structures. The ADU will be painted a gray-colored finish to match the existing main dwelling.

2. *The development assures that modifications satisfy functional requirements, and are screened with appropriate compatible materials; and*

   The proposed two-story ADU was designed to have the majority of the square footage on the ground floor in order to maximize space and functionality. The ADU will complement the character of the neighborhood as its building materials will match the existing dwelling. Furthermore, the project would not require additional parking spaces, so the subject site would still meet and exceed minimum parking requirements.

3. *The development assures that the modifications will not interfere with the privacy, quiet enjoyment or view of the surrounding properties.*

   The proposed two-story (ADU) is located within the rear yard of the site, but will be surrounded by vertical screening evergreen landscaping in order to provide a buffer between nearby residences. In addition, the Project will provide frosted windows on the second floor of the structure to not interfere with the privacy of the surrounding properties.

California Environmental Quality Act (CEQA):

The project is categorically exempt from further environmental review under the California Environmental Quality Act (CEQA) pursuant to CEQA Guidelines Section 15303 (Construction or Conversion of Small Structures). As proposed, the project is less than 10,000 square feet, located within an area where all public services and facilities are available to allow for maximum development permissible in the General Plan and in an area that is not environmentally sensitive.

Recommendation:

STAFF RECOMMENDS THAT the Zoning Administrator approve P-MS23-0123 to allow the development of a 1,083 square-foot Accessory Dwelling Unit (ADU) within the rear yard of an existing 1,856 square-foot residential building on an 0.2-acre site in the R1-6 Single Family Residential Zoning District located at 2387 and 2383 Mattos Dr., subject to the findings outlined in this report and the attached Conditions of Approval.

Attachments:

A. *Conditions of Approval*
B. *Project Plans*

Attachment A

CONDITIONS OF APPROVAL:

1. General Compliance. The applicant, including all successors in interest (collectively "Permittee") shall comply with each and every condition set forth in this Permit. This **Minor Site Development Permit No. MS23-0123** ("Permit") shall have no force or effect and no building permit shall be issued unless and until all things required by the below-enumerated precedent conditions have been performed or caused to be performed. **(P)**

2. Effective Date. Unless there is a timely appeal filed in accordance with the Milpitas Zoning Code, the date of approval of this Permit is the date on which the decision-making body approved this Permit. **(P)**

3. Acceptance of Permit. Should Permittee fail to file a timely appeal within twelve (12) calendar days of the date of approval of this Permit, inaction by Permittee shall be deemed to constitute each of the following: **(P)**
   i. Acceptance of this Permit by Permittee; and
   ii. Agreement by the Permittee to be bound by, comply with, and to do all things required of or by Permittee pursuant to all of the terms, obligations, and conditions of this Permit.

4. Permit Expiration. Pursuant to Section XI-10-64-06 of the Milpitas Zoning Code, this Permit shall become null and void if the activity permitted by this Permit is not commenced within two (2) years from the date of approval, or for a project submitted with a tentative map, within the time limits of the approved tentative map. Pursuant to Section XI-10-64.06(B) of the Milpitas Zoning Code, an activity permitted by this Permit shall be deemed to have commenced when the project: **(P)**
   i. Completes a foundation associated with the project; or
   ii. Dedicates any land or easement as required from the zoning action; or
   iii. Complies with all legal requirements necessary to commence the use, or obtains an occupancy permit, whichever is sooner.

5. Time Extension. Pursuant to Section XI-10-64.07 of the Milpitas Zoning Code, unless otherwise provided by State law, Permittee shall have the right to request a one-time extension of the Permit if the request is made in writing to the Planning Department prior to the expiration date of the approval. **(P)**

6. Notice. Pursuant to California Government Code Section 66020, any protest filed in court relating to the imposition of fees, dedication, reservations, or other exactions to be imposed on the development project shall be filed within ninety (90) days after the date of the approval of this Permit. This provision serves as notice from the local agency to the Permittee that the ninety (90) day period in which the applicant may file a protest has begun under California Government Code Section 66020(d)(1). **(CA)**

7. Cost and Approval. Permittee shall fully complete and satisfy each and every condition set forth in this Permit and any other condition applicable to the project to the sole satisfaction of the City. Additionally, Permittee shall be solely responsible and liable for the cost to satisfy each and every condition. Permittee shall pay all required fees and charges to the City at the rate in effect at time of building permit issuance, or, the rate in effect when the fees and charges are due and paid in full to the City. There is no vesting of any fees or charges with the approval of this Permit. **(P)**

8. Conditions. Each and every condition set forth in this Exhibit shall apply to the project and continue to apply to the project so long as the Permittee is operating the project under the permits and approvals in this Permit. **(P)**

9. Compliance with Laws. The construction, use, and all related activity authorized under this Permit shall comply with all applicable local, state, and federal laws, rules, regulations, guidelines, requirements, and policies. **(CA/P)**

10. Previous Approvals. Permittee shall abide and continue to comply with all previous City approvals, permits, or requirements relating to the subject property, unless explicitly superseded or revised by this Permit. **(P)**

11. Indemnification. To the fullest extent permitted by law, Permittee shall indemnify, defend with counsel of the City's choosing, and hold harmless City, its City Council, its boards and commissions, officials, officers, employees, and agents from and against any and all claims, demands, obligations, damages, actions, causes of action, suits, losses, judgments, fines, penalties, liabilities, costs and expenses (including without limitation, attorney's fees, disbursements and court costs) of every kind and nature whatsoever which may arise from or in any manner relate (directly or indirectly) to (i) City's approval of the project, including but not limited to, the approval of the discretionary permits, maps under the Subdivision Map Act, and/or the City's related determinations or actions under the California Environmental Quality Act, and (ii) Permittee's construction, operation, use, or related activity under this Permit. This indemnification shall include, but not be limited to, damages awarded against the City, if any, costs of suit, attorneys' fees, and other expenses incurred in connection with such claim, action, causes of action, suit or proceeding whether incurred by applicant, City, and/or the parties initiating or bringing such proceeding. Permittee shall indemnify the City for all of City's costs, attorneys' fees, and damages which City incurs in enforcing the indemnification provisions set forth in this condition. Permittee shall pay to the City upon demand or, as applicable, to counsel of City's choosing, any amount owed pursuant to the indemnification requirements prescribed in this condition. **(CA)**

12. Written Response to Conditions. The Permittee shall provide a written response to the Conditions of Approval indicating how each condition has been addressed with the building permit application submittal. **(ALL)**

13. Revocation, Suspension, Modification. This Permit may be suspended, revoked, or modified in accordance with Section XI-10-63.06 of the Milpitas Zoning Code. **(P)**

14. Severability. If any term, provision, or condition of this Permit is held to be illegal or unenforceable by the Court, such term, provision, or condition shall be severed and shall be inoperative, and the remainder of this Permit shall remain operative, binding, and fully enforceable. **(CA)**

15. Permittee shall develop the approved project in conformance with the approved plans (date stamped November 16, 2023), approved by the Zoning Administrator in accordance with these Conditions of Approval. **(P)**

    Any deviation from the approved site plan, elevations, materials, colors, landscape plan, or other approved submittal shall require that, prior to the issuance of building permits, the Permittee shall submit modified plans and any other applicable materials as required by the City for review and obtain the approval of the Planning Director or Designee. If the Planning Director or designee determines that the deviation is significant, the owner or designee shall be required to apply for review and obtain approval of the Zoning Administrator or City Council, as applicable, in accordance with the Milpitas Zoning Code. **(P)**

16. Fire Department. The permittee shall comply with the requirements of the Fire Department and the California Fire Code, as may be amended by the City of Milpitas. Changes to the site plan and/or internal circulation shall be reviewed and approved by the Fire Department. **(F)**

17. Building Department. The permittee shall comply with the requirements of the Building, Safety and Housing Department. Building construction plans must be submitted for review and approval before construction is to commence. All applicable California Code of Regulations Title 24 and Milpitas Municipal Code requirements at the time of building permit application must be met in advance of any building permit approvals or related construction. **(B)**

18. Land Development Department The project/development shall comply with the requirements of the Engineering Division. Changes to the site plan shall be reviewed and approved by the Engineering Division. **(LD)**

(P) = Planning
(PO) = Police
(F) = Fire Prevention
(B) = Building
(LD) = Land Development
(CA) = City Attorney

_____ Date: _____

Jay Lee, AICP
Planning Director

PROJECT LOCATION

2383 MATTOS DRIVE, MILPITAS, CA 95035

APN

08839031

ZONING DISTRICT:

R1-6

LOT AREA:

8,712 SQUARE FEET

YEAR BUILT:

1970

GROSS FLOOR AREA:

PROPOSED ADU PORCH:	84.0 GSF
PROPOSED ADU FIRST FLOOR :	672.0 GSF
PROPOSED ADU 2ND FLOOR :	326.8 GSF
PROPOSED ADU TOTAL:	1,082.8 GSF
EXISTING BUILDING:	1,856.0 GSF
PROPOSED ADU :	1,082.8 GSF
PROPOSED TOTAL:	2,938.8 GSF

BED/BATH:

EXISTING BUILDING:	4/2.5
PROPOSED ADU:	2/1

STORIES:

EXISTING BUILDING:	2
PROPOSED ADU:	2

OCCUPANCY GROUP:

EXISTING BUILDING:	R3
PROPOSED ADU:	R3

CONSTRUCTION TYPE:

EXISTING BUILDING:	VB
PROPOSED ADU:	VB

SPRINKLERED

EXISTING BUILDING:	NO
PROPOSED ADU:	NO

SETBACK REQUIREMENTS:

LIMITTED DETACHED ADU ON SINGLE FAMILY LOT:

REQUIRED ADU SIDE YARD SETBACK: 4'
PROPOSED ADU SIDE YARD SETBACK: 4'

REQUIRED ADU REAR YARD SETBACK: 4'
PROPOSED ADU REAR YARD SETBACK: 4'

REQUIRED ADU SETBACK FROM PRIMARY DWELLING UNIT: 6'
PROPOSED ADU SETBACK FROM PRIMARY DWELLING UNIT: 6'

FIRE RATED WALL AND OPENING ARE REQUIRED ON EITHER THE EXISTING HOUSE WALL OR ON THE ADU WALL IF THE SEPARATION DISTANCE BETWEEN THE TWO STRUCTURES IS LESS THAN 10'

HEIGHT REQUIREMENTS:

PERMITTED 2-STORY DETACHED ADU:

PERMITTED ADU HEIGHT ABOVE GRADE:	28' - 0"
PROPOSED ADU HEIGHT ABOVE GRADE:	21' - 6 1/2"

ADU PARKING REQUIREMENT AND EXEMPTIONS:

PARKING EXEMPTIONS FOR AN ADU (MUNICIPAL CODE XI-10-13.08 (H): NO PARKING IS REQUIRED FOR AN ADU THAT MEETS ANY OF THE FOLLOWING CRITERIA.
1. THE ADU IS LOCATED WITHIN 0.5 MILES OF A PUBLIC BUS STOP OR RAIL STATION (SEE WWW.VTA.ORG), AND THE PATH OF TRAVEL IS PUBLICLY ACCESSIBLE.

DISTANCE FROM PROPOSED ADU TO SOUTH TEMPLE DRIVE AND EDSEL DRIVE BUS STOP: .45 MILES (VTA LINE 246)

BUILDING INFORMATION 5

THE FOLLOWING ITEMS SHALL BE SUBMITTED AS DEFERRED SUBMITTALS:

1. SOLAP PANEL SUBMITTAL

NOTE: MINIMUM 2.04 KW PV SYSTEM (AS PER T-24 ENERGY COMPLIANCE FORM) WILL BE SUBMITTED UNDER SEPARATE PERMIT.

NOTE: THE PHOTOVOLTAIC PLANS SHALL BE SUBMITTED AND APPROVED PRIOR TO THE ROUGH ELECTRICAL INSPECTION. THIS PERMIT WILL NOT BE FINALIZED UNTIL THE PHTOVOLTAIC PERMIT IS FINALIZED.

DEFERRED SUBMITTALS 6

THE FOLLOWING ARE FEATURES THAT MUST BE INSTALLED AS CONDITION FOR MEETING THE MODELED ENERGY PERFORMANCE FOR THIS COMPUTER ANALYSIS:

1. INSULATION BELOW ROOF DECK

2. NEEA HEAT PUMP WATER HEATER BRAND (RHEEM), MODEL NAME (PROPH50 T2 RH375-15) OR EQUIVALENT TO BE INSTALLED AS SPECIFIED ON THE T-24 ENERGY COMPLIANCE FORMS.

REQUIRED SPECIAL FEATURES 8

THE FOLLOWING IS A SUMMARY OF THE FEATURES THAT MUST BE FIELD-VERIFIED BY A CERTIFIED HERS RATER AS A CONDITION FOR MEETING THE MODELED ENERGY PERFORMANCE FOR THIS COMPUTER ANALYSIS. ADDITIONAL DETAIL IS PROVIDED IN THE BUILDNG TABLES BELOW. REGISTERED CF2RS AND CF3RS ARE REQUIRED TO BE COMPLETED IN THE HERS REGISTRY:

- QUALITY INSULATION INSTALLATION (QII)
- INDOOR AIR QUALITY VENTILATION
- MINIMUM AIRFLOW
- VERIFIED SEER/SEER2
- VERIFIED REFRIGERANT CHARGE
- FAN EFFICACY WATTS/CFM
- VERIFIED HSPF
- VERIFIED HEAT PUMP RATED HEATING CAPACITY
- DUCT LEAKAGE TESTING

HERS FEATURE SUMMARY 7

PROJECT DESCRIPTION

THE PROJECT CONSISTS OF A NEW DETACHED 1,082 SQFT ADU IN THE REAR YARD OF THE PROPERTY AND DEMOLITION OF (2) SHEDS IN THE REAR.

NO NEW GAS METER WILL BE INSTALLED UNDER THIS PERMIT. 3

PROJECT DESCRIPTION 4

VICINITY MAP 3

2023 MILPITAS MUNICIPAL CODE
2022 CALIFORNIA RESIDENTIAL CODE & BULLETINS (CRC)
2022 CALIFORNIA ELECTRICAL CODE & BULLETINS (CEC)
2022 CALIFORNIA MECHANICAL CODE & BULLETINS (CMC)
2022 CALIFORNIA PLUMBING CODE & BULLETINS (CPC)
2022 CALIFORNIA ENERGY CODE & BULLETINS (CEC)
2022 CALIFORNIA FIRE CODE & BULLETINS (CFC)
2022 CALIFORNIA GREEN BUILDING STANDARDS CODE & BULLETINS (CALGREEN)

APPLICABLE CODES 2

PROJECT INFORMATION	A0.0
GENERAL INFORMATION	A0.1
BLUEPRINT FOR A CLEAN BAY	A0.2
CALGREEN MANDATORY MEASURES	A0.3
T24 REPORT	A0.4
T24 REPORT	A0.5
RESIDENTIAL MEASURES SUMMARY	A0.6
SITE PLAN	A1.0
FLOOR PLANS / LIGHTING / ELEC / DOORS / WINDOWS	A2.1
ELEVATIONS / SECTIONS	A3.1
DETAILS	A4.1
SKYLIGHT DETAILS	A4.2
TITLE SHEET	S1.0
FOUNDATION PLAN	S2.0
SECOND FLOOR FRAMING PLAN	S2.1
ROOF FRAMING PLAN	S2.2
FOUNDATION DETAILS	S3.0
FOUNDATION AND STAIR DETAILS	S3.1
SHEAR WALL DETAILS	S4.0
SHEAR WALL AND ROOF FRAMING DETAILS	S4.1

SHEET INDEX 1

DESIGN EVEREST
CONSULTING ENGINEERS
365 FLOWER LANE
MOUNTAIN VIEW, CA 94043
PHONE: (888) 311-3015 FAX: (650) 695-1801

2387 MATTOS DRIVE
ADU BUILDING PERMIT

REV	DATE	REMARKS
0	02.14.2023	BUILDING PERMIT
1	05.13.2023	REVISION 1
2	07.24.2023	REVISION 2
3	10.04.2023	REVISION 3

LICENSED ARCHITECT
NATHAN CONRAD
C36505
5-31-2025
STATE OF CALIFORNIA

SIGN DATE:
DATE:
SCALE:
DRAWN BY: NC
CKD BY: NC
PROJECT#: 202212048

A0.0
PROJECT INFORMATION

APPLIANCES

1. GENERALLY, THIS EQUIPMENT IS DELIVERED FACTORY DIRECT, MOUNTING & CONNECTIONS NOT INCLUDED. GENERAL CONTRACTOR SHALL MOUNT AND MAKE UP ALL REQUIRED CONNECTIONS TO MAKE THE EQUIPMENT FUNCTION PROPERLY.

CARPET

1. ALL MATERIAL SHOULD BE ORDERED AT LEAST TEN WEEKS PRIOR TO INSTALLATION TO ENSURE TIMELY DELIVERY.
2. VERIFY ALL LEAD TIMES FOR ALL MATERIALS TO ENSURE TIMELY INSTALLATION.
3. CARPET INSTALLER TO PROVIDE SEAMING PLAN TO DESIGNER AND CLIENT FOR APPROVAL PRIOR TO ORDERING CARPET. DO NOT CROSS SEAM OR SUBSTITUTE MANUFACTURERS.
4. ALL SEAMS SHALL BE SECURED ACCORDING TO MANUFACTURERS RECOMMENDATIONS.
5. SEAM SEALER MUST BE USED ON CARPET.
6. CARPET, WHEN INSTALLED, MUST BE COMPLETELY PROTECTED WITH POLY-TAC.
7. INSTALL CARPET FLAT, LEVEL, AND SECURE USING DIRECT GLUE DOWN METHOD AND MANUFACTURERS RECOMMENDED GUIDELINES.
8. ALL FLOOR OUTLETS OR SIMILAR DEVICES SHALL BE INSTALLED FOLLOWING CARPET INSTALLATION. INSTALLER TO COORDINATE CUTTING OF CARPET FOR FLOOR OUTLETS WITH ELECTRICAL CONTRACTOR.
9. DO NOT BEGIN INSTALLATION UNTIL PAINTING AND FINISH WORK ARE COMPLETE.

CONTRACTOR / CONSTRUCTION

1. INSTALL ALL WORK PLUMB, LEVEL, SQUARE, TRUE, AND IN PROPER ALIGNMENT.
2. GENERAL CONTRACTOR SHALL BE RESPONSIBLE FOR ANY AND ALL BONDS, CASH DEPOSITS, ETC. THAT THE CITY OR JURSIDICTION WILL REQUIRE TO FACILITATE CONSTRUCTION OF THE PROJECT.
3. CONTRACTOR SHALL OBTAIN ALL PERMITS AND INSPECTIONS AND WILL COMPLY WITH ALL APPLICABLE CODES, LAWS, ORDINANCES, RULES, AND REGULATIONS OF ALL PUBLIC AUTHORITIES (FEDERAL, STATE, OR LOCAL) GOVERNING THE WORK. THE MOST STRINGENT SHALL APPLY.
4. THE GENERAL CONTRACTOR SHALL OBTAIN AND PAY FOR ALL OTHER PERMITS REQUIRED BY LAW FOR THE EXECUTION OF THIS WORK UNLESS NOTED OTHERWISE. THE BASIC BUILDING PERMIT WILL BE OBTAINED AND PAID FOR BY THE OWNER. ALL TRADE PERMITS, IF REQUIRED BY JURISDICTION AUTHORITIES, AND FEES SHALL BE PAID FOR BY THE CONTRACTOR. THE CONTRACTOR SHALL ALSO OBTAIN AND PAY CERTIFICATES , INSPECTIONS, AND OTHER LEGAL FEES REQUIRED, BOTH PERMANENT AND TEMPORARY, INCLUDING PLUMBING, ELECTRICAL, AND HIGHWAY PERMITS UNLESS OTHERWISE SPECIFICALLY PROVIDED.
5. PRIOR TO BIDDING, THE GENERAL CONTRACTOR AND ALL SUB-CONTRACTORS SHALL VISIT THE SITE AND BECOME ACQUAINTED WITH ALL CONDITIONS RELATING TO THE CONSTRUCTION AND COMPLETION OF THE PROJECT AND THE EMPLOYMENT OF LABOR THEREON. BIDDERS AND THEIR SUB-CONTRACTORS SHALL REPORT ANY DISCREPANCIES TO THE ARCHITECT.
6. EACH SUBCONTRACTOR MUST BE A SPECIALIST IN THEIR FIELD. EACH SUBCONTRACTOR SHALL, PRIOR TO THE SUBMISSION OF HIS/HER BID OR PERFORMANCE OF WORK. NOTIFY THE GENERAL CONTRACTOR OF ANY WORK CALLED OUT IN THE DRAWINGS IN HIS/HER TRADE THAT CANNOT BE FULLY GUARUNTEED OR CONSTRUCTED ACCORDING TO THE ARCHITECT'S DESIGN INTENT.
7. THE CONTRACTOR SHALL CHECK AND VERIFY ALL DIMENSIONS AND CONDITIONS FOR BUILDING AND SITE PRIOR TO PROCEEDING WITH THE WORK.
8. GENERAL CONTRACTOR TO OBTAIN CONTACT INFORMATION FOR THE FOLLOWING UTILITIES: WATER, SEWER, GAS, PHONE, POWER, CATV.
9. PRIOR TO CONSTRUCTION, CONTRACTORS SHALL VERIFY SIZES, ARRANGEMENTS, AND CLEARANCES OF FIXTURES, EQUIPMENT, AND APPLIANCES SPECIFIED BY ARCHITECT, BY OTHERS, OR N.I.C.
10. CONTRACTOR SHALL VERIFY QUANTITY, SIZE, AND LOCATION OF ALL ITEMS AFFECTING WORK, INCLUDING, BUT NOT LIMITED TO PLUMBING FIXTURES, ELECTRICAL, RECEPTACLES, LIFE SAFETY EQUIPMENT, DUCTWORK, APPLIANCES, AND EQUIPMENT BEING PROVIDED BY OTHERS. T+C ARCHITECTURE AND INTERIOR DESIGN IS TO BE NOTIFIED OF ANY ITEMS IN CONFLICT PRIOR TO CONSTRUCTION.
11. CONTRACTOR SHALL COMPLY WITH APPLICABLE LOCAL, STATE, AND FEDERAL CODES AND REGULATIONS REGARDING SAFETY OR PERSONS, PROPERTY, AND ENVIRONMENTAL PROTECTION.
12. ALL FINISHES SHALL MEET OR EXCEED REQUIREMENTS OF LOCAL CODES.
13. GENERAL CONTRACTOR IS RESPONSIBLE FOR ANY AND ALL PURCHASES FOR THE ENTIRE PROJECT, U.O.N.
14. VERIFY ALL MANUFACTURERS LEAD TIMES AT BID STAGE AND PURCHASE ALL MATERIALS ACCORDINGLY. SUBSTITUTIONS MAY NOT BE MADE WITHOUT WRITTEN CONSENT FROM T+C ARCHITECTURE AND INTERIOR DESIGN AND CLIENT.
15. PRIOR TO PURCHASE OR INSTALLATION OF ANY FINISH, SUBMIT (3) SAMPLES TO ARCHITECT FOR REVIEW. ALLOW TIME FOR SUBMITTAL REVIEW AND RESUBMITTALS IF REQUIRED.
16. UNLESS QUALIFIED, NO PRODUCT SUBSTITUTIONS OR "OR EQUAL" PRODUCTS, EQUIPMENT OR MATERIALS SHALL BE ALLOWED.
17. T+C ARCHITECTURE AND INTERIOR DESIGN IS NOT RESPONSIBLE FOR ANY RESELECTS REQUIRED DUE TO MATERIALS NOT BEING PURCHASED PRIOR TO MANUFACTURERS GIVEN LEAD TIMES. CONTRACTORS WILL BE RESPONSIBLE TO RESELECT MATERIAL AND SUBMIT TO T+C ARCHITECTURE AND INTERIOR DESIGN FOR APPROVAL WITHOUT IMPACTING THE SCHEDULE.
18. FLAME CERTIFICATES ARE TO BE OBTAINED FOR ALL FINISH MATERIALS IN DUPLICATE BY CONTRACTOR. SUBMIT (1) ONE COPY OF EACH TO T+C ARCHITECTURE AND INTERIOR DESIGN. CONTRACTOR SHALL VERIFY ALL DIMENSIONS PRIOR TO THE COMMENCEMENT OF WORK AND/OR ORDERING OF MATERIALS. ANY VARIANCES WHICH MAY AFFECT THE WORK ARE TO BE REPORTED TO THE ARCHITECT FOR RESOLUTION BEFORE PROCEEDING.
19. ANY UNCERTAINTY AND/OR DISCREPANCY CONCERNING PRODUCT/MATERIAL TYPE SHALL BE VERIFIED W/ THE ARCHITECT.
20. PROVIDE ACCESS PANELS AS REQUIRED. COORDINATE LOCATIONS, SIZES, AND AND DETAILS FOR ACCESS PANELS AND SUBMIT FOR ARCHITECT'S APPROVAL.
21. JOINT SEALERS SHALL BE REQUIRED AT THE INTERSECTION OF ALL DISSIMILAR MATERIALS IN INTERIOR AND EXTERIOR CONDITIONS.
22. ARCHITECTURAL, MECHANICAL, AND ELECTRICAL PENETRATIONS OF THE BUILDING ENVELOPE INCLUDING EXTERIOR WINDOWS, GRILLES, HVAC DUCTWORK, AND CONDUIT AS REQUIRED THROUGH THE EXTERIOR WALLS, ROOF DECKS, VERTICAL ROOF AND MANSARD WALLS SHALL REQUIRE MECHANICAL FLASHING IN ADDITION TO APPROPRIATE EXTERIOR SEALANTS TO PROVIDE ENSURE WATERTIGHT CONDITIONS AT THESE LOCATIONS.
23. GENERAL CONTRACTOR SHALL PROVIDE LOUVERS FOR THE ATTIC VENTING AIR EXCHANGES THAT MEET OR EXCEED THE REQUIRED VOLUME OF AIR PER THE CALCULATIONS. CONTRACTOR SHALL PROVIDE THE PROPER QUANTITY OF LOUVERS SO THAT THE REQUIRED VOLUME OF AIR IS EXCHANGED.
24. SPLASHBLOCKS TO BE PLACED UNDER RAINWATER LEADERS, TYP., INCLUDING AT COURTYARD PLANTERS.
25. ALL PIPING, CONDUITS, AND DUCTWORK SHALL BE CONCEALED UNLESS SPECIFICALLY NOTED OTHERWISE.
26. IT IS THE RESPONSIBILITY OF THE GENERAL CONTRACTOR TO COORDINATE, FURNISH AND INSTALL ALL FRAMING, BACKING AND DEADWOOD REQUIREMENTS FOR EQUIPMENT AND MATERIALS INSTALLED IN THE BUILDING.
27. CONTRACTOR SHALL PROVIDE ALL NECESSARY BACKING AND/OR BLOCKING FOR ALL ORNAMENTAL LIGHT FIXTURES, EQUIPMENT, FIXED DECORATIVE ELEMENTS, AND WINDOW TREATMENTS WHERE APPLICABLE.
28. PROVIDE AND COORDINATE LOCATION AND TYPE OF BLOCKING / BACKING IN PARTITIONS BEHIND ALL WALL MOUNTED ITEMS. REVIEW ALL BLOCKING W/ ARCHITECT IN FIELD PRIOR TO COVERING W/ OTHER MATERIAL.
29. ALL CHANGES IN FLOOR MATERIAL OCCUR AT THE CENTERLINE OF DOOR OR FRAMED OPENING UNLESS OTHERWISE INDICATED ON THE DRAWINGS.

DRAWINGS / SPECIFICATIONS

1. ARCHITECT DRAWINGS ARE THE PROPERTY OF T+C ARCHITECTURE AND INTERIOR DESIGN AND SHALL NOT BE USED FOR PURPOSES OTHER THAN SHOWN HEREIN.
2. NO DEVIATIONS SHALL BE MADE FROM THE WORK DESCRIBED IN THE ARCHITECTURAL DRAWINGS AND SPECIFICATIONS WITHOUT WRITTEN APPROVAL FROM THE ARCHITECT.
3. SUBSTITUTIONS, REVISIONS, OR CHANGES MUST BE SUBMITTED TO T+C ARCHITECTURE AND INTERIOR DESIGN FOR REVIEW AND APPROVAL PRIOR TO PURCHASING, FABRICATION, OR INSTALLATION.
4. CONFLICTS FOUND IN THE CONSTRUCTION DOCUMENTS SHALL BE BROUGHT TO THE ATTENTION OF THE ARCHITECT.
5. IT IS THE RESPONSIBILITY OF ANYONE SUPPLYING LABOR AND/OR MATERIALS TO NOTIFY THE ARCHITECT OF ANY CONFLICTS OR DISCREPANCIES BETWEEN THE ARCHITECTURAL DRAWINGS / SPECIFICATIONS AND THE DRAWINGS PRODUCED BY ENGINEERS OR OTHER PROJECT CONSULTANTS.
6. DETAILS AND NOTES ARE TO BE CONSIDERED TYPICAL AND ARE TO APPLY IN SIMILAR CONDITIONS IN ALL PARTS OF THE BUILDING U.N.O. NOTIFY THE ARCHITECT IN THE EVENT OF ANY DISCREPANCY.
7. DETAILS AND NOTES ARE NOT MEANT TO CONTRADICT MANUFACTURERS INSTALLATION GUIDELINES. ALL FINISHES, FIXTURES, EQUIPMENT, AND APPLIANCES SHALL BE INSTALLED IN STRICT COMPLIANCE WITH MANUFACTURERS RECOMMENDATIONS.
8. DO NOT SCALE DRAWINGS, WRITTEN DIMENSIONS GOVERN. TYPICAL OR TYP. SHALL MEAN THAT THE CONDITION, DETAIL, OR ELEVATION IS REPRESENTATIVE OF SIMILAR CONDITIONS THROUGHOUT, U.N.O.
9. ALL DIMENSIONS, WHEN SHOWN IN THE ARCHITECTURAL PLANS, ARE TO FACE OF STUD, MASONRY, OR CONCRETE; OR CENTERLINE OF COMMON WALL UNLESS OTHERWISE NOTED.
10. ALL WORK NOTED AS "NOT IN CONTRACT," "N.I.C," OR "BY OTHERS" SHALL BE PROVIDED UNDER A SEPARATE CONTRACT. CONTRACTOR SHALL INCLUDE "NOT IN CONTRACT," "N.I.C.," AND "BY OTHERS" ITEMS IN CONSTRUCTION SCHEDULE AND COORDINATE AS NECESSARY TO ASSURE PROPER AND TIMELY INSTALLATION.
11. SHOP DRAWINGS FOR ALL BUILT-IN CABINETRY ARE BY OTHERS. DRAWINGS SHOWN ARE FOR DESIGN DIRECTION ONLY. SHOP DRAWINGS MUST BE APPROVED BY THE DESIGNER.
12. NOTES ARE AN AID TO THE CONTRACTOR IN UNDERSTANDING THE WORK AND SHOULD NOT BE CONSTRUED AS BEING COMPLETE IN EVERY DETAIL. IT IS THE RESPONSIBILITY OF THE CONTRACTOR TO BECOME THOROUGHLY FAMILIAR WITH THE WORK, AND REPORT ALL DISCREPANCIES BETWEEN THE DRAWINGS AND THE ACTUAL CONDITIONS TO THE ARCHITECT.
13. THE DRAWINGS INDICATE LOCATION, DIMENSIONS, REFERENCE, AND TYPICAL DETAILS OF CONSTRUCTION. THE DRAWINGS DO NOT ILLUSTRATE EVERY CONDITION. WORK NOT PARTICULARLY DETAILED SHALL BE OF CONSTRUCTION SIMILAR TO PARTS THAT ARE DETAILED.
14. DO NOT SUBSTITUTE, REVISE, OR CHANGE THE WORK WITHOUT THE WRITTEN CONSENT OF THE ARCHITECT.
15. CONTRACTOR SHALL PAY SPECIFIC ATTENTION TO THE DIMENSIONS OR IMPLIED PLAN AND SECTIONAL SPATIAL RELATIONSHIPS, AND VERIFY ALL AXES AND IMPLIED SYMMETRIES BEFORE BEGINNING WORK.
16. DETAILED AND LARGER SCALE DRAWINGS TAKE PRECEDENCE OVER SMALLER SCALE DRAWINGS.
17. DIMENSIONS ARE NOT ADJUSTABLE WITHOUT APPROVAL OF THE ARCHITECT, UNLESS NOTED AS +/-.
18. VERTICAL DIMENSIONS ARE FROM THE TOP OF SUBFLOOR, UNLESS OTHERWISE NOTED.
19. DIMENSIONS MARKED AS "V.I.F." SHALL BE VERIFIED IN THE FIELD BY THE CONTRACTOR.
20. DEFINITIONS USED IN THE DRAWINGS:

    SIMILAR: COMPARABLE CHARACTERISTICS FOR THE CONDITION NOTED. DIFFERENCES CAN BE INFERRED FROM OTHER INFORMATION INDICATED. VERIFY DIMENSIONS AND ORIENTATIONS W/ ARCH IN FIELD PRIOR TO CONSTRUCTION.

    AS REQUIRED: AS REQUIRED BY REGULATORY REQUIREMENTS, BY REFERENCED STANDARDS, BY EXISTING CONDITIONS, BY GENERALLY ACCEPTED CONSTRUCTION PRACTICES, OR BY THE CONTRACT DOCUMENTS.

    TYPICAL: IDENTICAL FOR ALL SUCH CONDITIONS, UNLESS OTHERWISE NOTED.

    CONTRACTOR: THE GENERAL CONTRACTOR OR ANY SUBCONTRACTORS HIRED INDIVIDUALLY OR INDEPENDENTLY BY THE OWNER.

    ALL REFERENCES TO 'EXISTING' ARE REFERRING TO EXISTING CONDITIONS.
21. LEGENDS ON THE PLANS, SHEET NOTES, AND GENERAL NOTES SHALL BE INCLUDED AS COMPLIMENTARY INFORMATION, MEANING ALL REFERENCES TO LABOR, MATERIALS, AND SYSTEMS SHALL BE INCLUDED IN THE GC'S PRICE FOR WORK WITHOUT CHANGES TO THE CONTRACT PROCE OR SCHEDULE.

EQUIPMENT / APPLIANCES

1. KITCHEN APPLIANCES INSTALLED AND PURCHASED BY CONTRACTOR.
2. REFER TO MFR. SPECS. FOR REQUIREMENTS FOR ALL APPLIANCES.
3. ALL A/V EQUIPMENT TO BE SELECTED AND PROVIDED BY OTHERS.
4. ALL WIRING / CABLING REQUIRED FOR A/V AND/OR COMPUTER EQUIPMENT TO BE DETERMINED BY QUALIFIED CONSULTANT. LOCATIONS SHOWN ON THESE DRAWINGS ARE FOR DESIGN DIRECTION ONLY.

FIRE PROTECTION

1. FIRE PROTECTION (INCLUDING SPRINKLERS) ARE DESIGN/BUILD FOR THE ENTIRE PROJECT AND SHALL BE IN ACCORDANCE WITH ALL APPLICABLE CODES. FIRE SPRINKLERS SHALL CONFORM TO NFPA 13 (INCLUSIVE OF ATTIC SPACES). FIRE SPRINKLER SYSTEM DESIGN SHALL BE DRAWN BY OTHERS AND SUBMITTED FIRST TO THE ARCH AND THEN TO THE FIRE DEPT. FOR APPROVAL PRIOR TO INSTALLATION. GC TO PROVIDE A COMPLETE AND FUNCTIONAL FIRE SPRINKLER SYSTEM, WITH APPROVALS FROM ALL AUTHORITIES HAVING JURISDICTION ON THE PROJECT, INCLUDING DESIGN AND INSTALLATION. ANY INFORMATION INCLUDED IN THE PLANS IS FOR REFERENCE ONLY. IT IS THE RESPONSIBILITY OF THE DESIGN/BUILD CONTRACTOR TO BE WELL VERSED IN THE REQUIREMENTS OF THE AUTHORITIES HAVING JURISDICTION AND THE CITY IN WHICH THE SYSTEM WILL BE INSTALLED. IT IS THE SOLE RESPONSIBILITY OF THE DESIGNER TO PROVIDE AND INSTALL AN APPROVED SYSTEM MEETING THE REQUIREMENTS OF THE LOCAL CODES, OFFICIALS AND THE OWNER.
2. PROVIDE A CERTIFICATE OF COMPLETION FOR THE INSTALLATION OF THE AUTOMATIC FIRE SPRINKLER SYSTEM IN ACCORDANCE WITH NFPA 13; SECTION 24.1; FIGURE 24.1 PRIOR TO FINAL INSPECTION OF THE OVERHEAD FIRE SPRINKLER SYSTEM AND FINAL APPROVAL FOR OCCUPANCY.
3. PROVIDE A CERTIFICATE OF COMPLETION FOR THE INSTALLATION OF THE UNDERGROUND PIPING SUPPLYING THE FIRE SPRINKLER SYSTEM IN ACCORDANCE WITH NFPA 24; SECTION 10.10; FIGURE 10.10.1 PRIOR TO FINAL INSPECTION OF THE UNDERGROUND PIPING ASSOCIATED WITH THE FIRE SPRINKLER SYSTEM AND FINAL APPROVAL FOR OCCUPANCY.
4. SPRINKLER HEADS SHALL BE FULLY CONCEALED.

GLAZING

1. GLASS SUBJECT TO HUMAN IMPACT SHALL BE OF SAFETY GLAZING MATERIAL (LAMINATED, UNLESS OTHERWISE NOTED) WHERE REQUIRED AND SHALL MEET LOCAL, STATE, AND FEDERAL REQUIREMENTS.

GROUT

1. FOR GROUT WIDTHS 1/8" - 5/8", USE SANDED.
2. FOR GROUT WIDTHS 1/16" - 1/8", USE UNSANDED.
3. USE UNSANDED GROUT ON ALL GLASS TILES.

METALS

1. ALL EXTERIOR METALS SHALL BE HOT DIPPED GALVANIZEDAND PAINTED FIELD PAINTED. GENERAL CONTRACTOR SHALL ASSUME THE MOST STRINGENT FINISH IF NOT INDICATED IN DOCUMENTS.

PAINT

1. ALL PAINTS MUST BE LOW VOC.
2. COMPLY WITH APPLICABLE FEDERAL, STATE, AND LOCAL REGULATIONS GOVERNING THE USE OF PAINT MATERIALS.
3. FOLLOW MANUFACTURERS RECOMMENDATIONS FOR ENVIRONMENTAL CONDITIONS UNDER WHICH COATINGS AND COATING SYSTEMS MAY BE APPLIED.
4. PROTECT FLOORS AND ALL ADJACENT SURFACES FROM PAINT SMEARS, SPLATTERS, AND DROPPINGS. MASK OFF AREAS WHERE REQUIRED. USE DROP CLOTHS TO PROTECT FLOORS AND ITEMS NO TO BE PAINTED.
5. PAINT VISIBLE DUCT SURFACES BEHIND VENTS, REGISTERS, AND GRILLS FLAT BLACK.
6. FINISH CEILING ACCESS DOORS, PIPES, CONDUIT, GRILLS, AND OTHER ITEMS OF SIMILAR NATURE IN A SEMI-GLOSS TO MATCH THE COLOR OF THE ADJACENT WALL AND CEILING PAINT COLOR UNLESS PRE-FINISHED IN FINAL INTENDED COLOR, OR AS DIRECTED.
7. ALL WALLS AND CEILINGS IN RESTROOMS TO HAVE SEMI-GLOSS FINISH, U.O.N.
8. ALL REMAINING WALLS AND CEILINGS TO HAVE EGGSHELL FINISH, U.O.N.
9. ALL TRIM, CASING, AND BASE TO HAVE SEMI-GLOSS FINISH, U.O.N.
10. ALL FLAT PAINT TO BE WASHABLE / SCRUBBABLE TYPE - SHERMAN WILLIAMS "DURATION HOME" OR EQUAL.
11. ALL COLORS MUST BE SUBMITTED TO ARCHITECT FOR APPROVAL PRIOR TO INSTALLATION.
12. ALL GRILLES SHOULD BE PAINTED TO MATCH SURROUNDING SURFACE COLOR.

POWER / LIGHTING / COMMUNICATIONS

1. CONTRACTOR RESPONSIBLE FOR ALL LIGHTING AND CEILING ELEMENTS, U.O.N.
2. REFER TO MECHANICAL, ELECTRICAL, AND FIRE PROTECTION DRAWINGS AND SPECIFICATIONS FOR THE DESIGN OF THESE SYSTEMS, SWITCHES, OUTLETS, FIXTURES, DUCTS, ETC.
3. VERIFY FIXTURE QUANTITIES PRIOR TO ORDERING.
4. NO SUBSTITUTIONS MAY BE MADE FOR SPECIFIED LIGHT FIXTURES WITHOUT WRITTEN APPROVAL FROM ARCHITECT AND CLIENT.
5. ALL CEILING ELEMENTS SHOULD BE ORDERED 12 WEEKS PRIOR TO INSTALLATION TO ENSURE TIMELY DELIVERY.
6. LIGHT SWITCHES SHALL CONFORM TO ALL APPLICABLE CODE REQUIREMENTS.
7. LIGHT SWITCHES SHOWN ADJACENT TO ONE ANOTHER SHALL BE GANGED WITH SINGLE DECORATIVE STAINLESS STEEL PLATES.
8. ELECTRICIAN SHALL DETERMINE WHETHER ELECTRONIC OR MAGNETIC DIMMERS ARE REQUIRED FOR LOW VOLTAGE LIGHT FIXTURES.
9. CONTRACTOR IS RESPONSIBLE FOR ADDITIONAL OUTLETS REQUIRED BY CODE.
10. CONTRACTOR TO DETERMINE EQUIPMENT REQUIRING SOLE DEDICATION OF A CIRCUIT.
11. VERIFY THE LOCATION OF REMOTE POWER PANELS, DISCONNECT SWITCHES, SPECIAL PANELS, THERMOSTATS, ALARMS, OR ANY DEVICE EXPOSED TO VIEW WILL NOT CONFLICT WITH ART OR CABINETRY AS SHOWN IN THESE DRAWINGS. CONTACT T+C ARCHITECTURE AND INTERIOR DESIGN IMMEDIATELY IF DISCREPANCIES ARISE.
12. ALL OUTLETS TO HAVE WHITE FINISH.
13. OWNER TO VERIFY ELECTRICAL OUTLET LOCATIONS.
14. ALL OUTLETS TO BE AT STANDARD HEIGHT, U.O.N.

SITE

1. ANY SURVEY MONUMENTS WITHIN THE AREA OF CONSTRUCTION SHALL BE PRESERVED OR RESET BY A REGISTERED CIVIL ENGINEER OR A LICENSED LAND SURVEYOR.
2. HAZARDOUS MATERIALS: IN THE EVENT THAT HAZARDOUS MATERIALS ARE ENCOUNTERED IN THE PREMISES DURING THE EXECUTION OF THE WORK, NOTIFY THE OWNER IMMEDIATELY AND DO NOT PROCEED UNTIL DIRECTED. FOLLOW ALL CAL OSHA REQUIREMENTS.
3. THE GENERAL CONTRACTOR SHALL REFER TO THE SOILS REPORT PROVIDED AND FOLLOW THE RECOMMENDED MEASURES CONTAINED THEREIN. THE GENERAL CONTRACTOR SHALL CONTACT THE SOILS ENGINEER AND REQUEST AN ON SITE REVIEW AND APPROVAL OF THE EXCAVATION AND OTHER WORK ELABORATED IN THE SOILS REPORT, INCLUDING INSPECTION OF THE FOUNDATION DRAINAGE SYSTEM, SLAB VAPOR BARRIER, AND VERTICAL WALL WATERPROOFING.
4. GENERAL CONTRACTOR TO PROVIDE ALL REQUIRED SURVEYS.
5. OFF SITE PARKING FOR SITE WORKERS IS GENERAL CONTRACTOR'S RESPONSIBILITY.
6. GENERAL CONTRACTOR IS RESPONSIBLE FOR SITE SURVEYING AND LAYOUT. OWNER TO PROVIDE ONE (1) BENCHMARK FOR GENERAL CONTRACTOR USE.
7. COORDINATE ALL WORK AS REQUIRED BY THE CONTRACT DOCUMENTS WITH THE OWNER, INCLUDING TEMPORARY STORAGE, LOADING, KEYING SYSTEMS, ETC., AND PROVIDE NECESSARY BARRICADES, SIGNS, BARRIERS, AND PROTECTION.
8. GENERAL CONTRACTOR TO PROVIDE TRAFFIC CONTROL & OFF-SITE PARKING DURING CONSTRUCTION.
9. ANY WASTE AND REFUSE CAUSED BY THE CONTRACTOR SHALL BE REMOVED FROM THE PREMISES AND DISPOSED OF IN ACCORDANCE WITH ALL LOCAL REGULATIONS.
10. GENERAL CONTRACTOR WILL BE RESPONSIBLE TO PROVIDE WATER, SEWER, POWER AND TELEPHONE CONNECTIONS FOR THE CONSTRUCTION TRAILER.
11. GENERAL CONTRACTOR SHALL RESEARCH AND VERIFY ALL TRASH, DEBRIS & RECYCLING REQUIREMENTS (INCLUDING TRASH SERVICE DURING CONSTRUCTION) FOR THE CITY IN WHICH THIS WORK WILL BE PERFORMED AND SHALL INCLUDE SUCH COSTS IN THIS PROPOSAL.

STONE / TILE

1. ALL MATERIALS SHOULD BE ORDERED AT LEAST TEN WEEKS PRIOR TO INSTALLATION TO ENSURE TIMELY DELIVERY.
2. VERIFY LEAD TIMES FOR ALL MATERIALS TO ENSURE TIMELY INSTALLATION.
3. ALL STEPS NECESSARY TO CREATE AN EXTREMELY FLUSH FLOOR ARE TO BE TAKEN BY CONTRACTOR. NO THRESHOLD SHOULD BE GREATER THAN 1/4".
4. MITER CORNERS, TYP.
5. AFTER FLOORS ARE CLEANED AND SEALED, THEY MUST BE PROTECTED PRIOR TO FURNITURE INSTALLATION.
6. STONE AND GROUT TO BE SEALED WITH MIRACLE SEALANTS 511 POROUS PLUS.
7. FINISH LEVEL OF CARPET AND HARD SURFACE MUST BE FLUSH. FLOORING CONTRACTOR IS ULTIMATELY RESPONSIBLE FOR DETERMINING CORRECT INSTALLATION OF MATERIAL TO MEET THIS OBJECTIVE.
8. A GROUT RELEASE IS RECOMMENDED TO PREVENT FINELY POWDERED PIGMENTS FROM LODGING IN THE PORES OF THE TILE SURFACE.
9. ALUMINUM FINISH SCHLUTER - PROFILE SCHIENE OR RENO TK - TO BE USED AS TRANSITIONS BETWEEN TILE AND CARPET.
10. THE MINIMUM SIZE SCHLUTER NECESSARY TO CREATE A FLUSH TRANSITION SHOULD BE USED TO MAKE AS INCONSPICUOUS AS POSSIBLE.
11. CERAMIC TILE TO BE INSTALLED IN STRICT ACCORDANCE WITH PUBLISHED REFERENCE STANDARDS AND MANUFACTURERS / DISTRIBUTORS INSTALLATION REQUIREMENTS.
12. INSTALL TILE IN A PATTERN AND DIRECTION AS SHOWN IN DRAWINGS.
13. INSTALL FLOOR TILE INTO RECESS AND UNDER EQUIPMENT WHERE APPLICABLE.
14. MINIMIZE THE NUMBER OF SMALL CUT TILES WHENEVER POSSIBLE.
15. REFER TO MFG. RECOMMENDATIONS FOR GROUT JOINT SIZES. THE MINIMUM SIZE JOINT SHALL APPLY.

VINYL

1. ALL MATERIAL SHOULD BE ORDERED AT LEAST TEN WEEKS PRIOR TO INSTALLATION TO ENSURE TIMELY DELIVERY.
2. VERIFY ALL LEAD TIMES FOR ALL MATERIALS TO ENSURE TIMELY INSTALLATION.
3. ALL INSTALLATION METHODS SHALL BE PER VINYL MANUFACTURERS RECOMMENDATIONS.
4. USE ONLY THE APPROPRIATE MANUFACTURERS ADHESIVE.
5. MATERIALS AND ADHESIVE SHOULD BE ALLOWED TO ACCLIMATE FOR A MINIMUM OF 24 TO 48 HOURS.
6. ALL INSTALLATIONS MUST BE ROLLED WITH A MINIMUM 100LB ROLLER.

WALLS

1. ALL WALLS TO HAVE AT LEAST A LEVEL 4 SMOOTH FINISH, U.N.O.
2. ALL OUTSIDE EDGES TO HAVE A SQUARE PROFILE CORNER BEAD, U.O.N.
3. SEE SHEETS A10.0'S FOR DESCRIPTIONS OF WALL OR FLOOR/CEILING ASSEMBLY DETAILS.

WALL / WINDOW COVERING

1. ALL WALLCOVERING PRIMERS, ADHESIVES, SEALERS, SIZING, AND INSTALLATION METHODS SHALL BE PER WALLCOVERING MANUFACTURERS RECOMMENDATIONS.
2. WALLCOVERING TO BE INSTALLED SECURE AND FLAT, WITHOUT WRINKLES, GAPS, OR OVERLAPS. SEAMS SHALL BE TIGHT AND SECURE. CLEAN WALLCOVERING TO BE FREE OF DIRT AND GLUE.
3. WALL COVERING SEAMS SHOULD BE NO CLOSER THAN SIX INCHES FROM THE OUTSIDE CORNERS AND FIVE INCHES FROM THE INSIDE CORNERS. HORIZONTAL SEAMS ARE NOT ACCEPTABLE, U.O.N.
4. ALL SEAMS SHALL BE VERTICAL AND PLUMB, WITH PATTERN MATCHED TO THE GREATEST DEGREE POSSIBLE WHERE PATTERN OCCURS.
5. WHERE WALLCOVERING OCCURS, WALL TO RECEIVE LEVEL 5 FINISH.
6. PROVIDE WINDOW BLINDS FOR ALL WINDOWS AND DOORS.

WOOD / FINISH CABINETRY

1. ALL STAINED WOOD TO HAVE SATIN MATTE FINISH - DO NOT USE LACQUER, U.O.N.
2. TYPES OF ARCHITECTURAL WOODWORK SHALL INCLUDE THE FOLLOWING: INTERIOR STANDING AND RUNNING TRIMS, RAILS, BASE, DOOR CASING, DOOR FRAMES, CHAIR RAILS, DOORS, WOOD CABINETS, BUILT-IN DESKS, WOOD COUNTER APRONS, WOOD BULKHEADS, FLUSH WOOD PANELING, AND RAISED WOOD / APPLIED WOOD PANELING.
3. FULL LENGTH CONTINUOUS BOARDS SHALL BE USED WHENEVER APPLICABLE OR SPECIFICALLY NOTED.
4. ALL JOINTS SHALL BE TIGHT AND TRUE AND SECURELY FASTENED. CORNERS SHALL BE NEATLY MITERED, BUTTED, OR COPED WITH NAILS SET AND SURFACES FREE OF TOOL MARKS.
5. ALL NAILING SHALL BE DONE WITH FINISH NAILS WHERE PAINT OR STAIN IS TO COVER.
6. ALL WOOD GRAIN IS TO BE LAID IN THE DIRECTIONS INDICATED ON ELEVATIONS AND DETAILS. CONTACT T+C ARCHITECTURE AND INTERIOR DESIGN WITH ANY CONFLICTS OR DISCREPANCIES.
7. STAIN SUBMITTAL MUST BE REPRESENTATIVE OF ALL POSSIBLE COLOR VARIANCES OR MATERIAL APPROVED COLOR VARIATIONS WILL DETERMINE COMPLIANCE WITH THE SPECIFIED MATERIAL. INSTALLATION OF MATERIAL THAT DEVIATES FROM THE APPROVED SAMPLES WILL BE REQUIRED TO BE REMOVED AND REPLACE BY CONTRACTOR.
8. CONTRACTOR TO SUPPLY SHOP DRAWINGS FOR ALL MILLWORK.

A. G.C. SHALL PROVIDE SAFETY GLAZING IN ALL LOCATIONS REQUIRED BY CBC SEC. 2406 AND AS REQUIRED BY CHAPTER 7.

B. GC SHALL INCLUDE IN BID ALL LIGHT FIXTURES, WIRING, AND ASSOCICATED SYSTEMS FOUND IN ELECTRICAL, ARCHITECTURAL, AND ALL OTHER DRAWINGS AND SPEC, INCLUSIVE, TYP.

C. GC SHALL INCLUDE COORDINATION OF LIGHT FIXTURES, MECHANICAL DUCTWORK, AND REGISTERS INALL CEILINGS, TYP. MINOR VARIATIONS IN LOCATIONS OF ALL ABOVE SYSTEMS SHALL BE INCLUDED IN THE BID.

D. ALL LIGHTS TO BE LED LIGHTS.

E. VERIFY & UPGRADE ELECTRICAL OUTLETS TO AFCI, TYP.

DESIGN EVEREST
CONSULTING ENGINEERS
365 FLOWER LANE
MOUNTAIN VIEW, CA 94043
PHONE: (888) 311-3015 FAX: (650) 695-1801

2387 MATTOS DRIVE

ADU BUILDING PERMIT

REV	DATE	REMARKS
0	02.14.2023	BUILDING PERMIT
1	05.13.2023	REVISION 1
2	07.24.2023	REVISION 2
3	10.04.2023	REVISION 3

LICENSED ARCHITECT
NATHAN CONRAD
C36505
5-31-2025
STATE OF CALIFORNIA

SIGN DATE:

DATE:

SCALE:

DRAWN BY: Author

CKD BY: Checker

PROJECT#: 202212048

A0.1

GENERAL INFORMATION

BLUEPRINT FOR A CLEAN BAY

Best Management Practices for the Construction Industry

Remember: The property owner and the contractor share ultimate responsibility for the activities that occur on a construction site. You may be held responsible for any environmental damage caused by your subcontractors or employees.

Preventing Pollution: It's Up to Us

In the Santa Clara Valley, storm drains transport water directly to local creeks and San Francisco Bay without treatment. Stormwater pollution is a serious problem for wildlife dependent on our creeks and bays and for the people who live near polluted streams or baylands. Common sources of this pollution include spilled oil, fuel, and fluids from vehicles and heavy equipment; construction debris; sediment created by erosion; landscaping runoff containing pesticides or weed killers; and materials such as used motor oil, antifreeze, and paint products that people pour or spill into a street or storm drain.

Santa Clara Valley Urban Runoff Pollution Prevention Program

Thirteen valley municipalities have joined together with Santa Clara County and the Santa Clara Valley Water District to educate local residents and businesses and fight stormwater pollution. This "blueprint" summarizes "Best Management Practices "(BMPs) for stormwater pollution prevention.

Spill Response Agencies:

1. Dial 911
2. Santa Clara County Environmental Health Services (408) 299-6930
3. Governor's Office of Emergency Services Warning Center (800) 852-7550 (24 hours).

Small Business Hazardous Waste Disposal Program

Santa Clara County businesses that generate less than 27 gallons or 220 pounds of hazardous waste per month are eligible to use Santa Clara County's Small Business Hazardous Waste Disposal Program. Call (408) 299-7300 for a quote, more information or guidance on disposal.

Local Pollution Control Agencies

Santa Clara County Office of Toxics and Solid Waste Management (408) 441-1195

Santa Clara Valley Water District (408) 265-2600

San Jose/Santa Clara Water Pollution Control Plant (408) 945-5300 Serving Milpitas, Cupertino, Los Gatos, Milpitas, Monte Sereno, San Jose, Santa Clara and Saratoga

Fresh Concrete and Mortar Application

Who should use this information?

- Masons and Bricklayers
- Sidewalk Construction Crews
- Patio Construction Workers
- Construction Inspectors
- General Contractors
- Home Builders
- Developers
- Concrete Delivery/Pumping Workers

Storm Drain Pollution from Fresh Concrete And Mortar Applications

Fresh concrete and cement-related mortars that wash into lakes, streams, or estuaries are toxic to fish and the aquatic environment. Disposing of these materials to the storm drains or creeks can block storm drains, causes serious problems, and is prohibited by law.

Doing the Job Right General Business Practices

- ❑ Wash out concrete mixers only in designated wash-out areas in your yard, away from storm drains and waterways, where the water will flow into a temporary waste pit in a dirt area. Let water percolate through soil and dispose of settled, hardened concrete as garbage. Whenever possible, recycle washout by pumping back into mixers for reuse.
- ❑ Wash out chutes onto dirt areas at site that do not flow to streets or drains.
- ❑ Always store both dry and wet materials under cover, protected from rainfall and runoff and away from storm drains or waterways. Protect dry materials from wind.
- ❑ Secure bags of cement after they are open. Be sure to keep wind-blown cement powder away from streets, gutters, storm drains, rainfall, and runoff.
- ❑ Do not use diesel fuel as a lubricant on concrete forms, tools, or trailers.

During Construction

- ❑ Don't mix up more fresh concrete or cement than you will use in a two-hour period.
- ❑ Set up and operate small mixers on tarps or heavy plastic drop cloths.
- ❑ When cleaning up after driveway or sidewalk construction, wash fines onto dirt areas, not down the driveway or into the street or storm drain.
- ❑ Protect applications of fresh concrete and mortar from rainfall and runoff until the material has dried.
- ❑ Wash down exposed aggregate concrete only when the wash water can (1) flow onto a dirt area; (2) drain onto a bermed surface from which it can be pumped and disposed of properly; or (3) be vacuumed from a catchment created by blocking a storm drain inlet. If necessary, divert runoff with temporary berms. Make sure runoff does not reach gutters or storm drains.
- ❑ When breaking up pavement, be sure to pick up all the pieces and dispose of properly. Recycle large chunks of broken concrete at a local recycling facility.
- ❑ Never bury waste material. Dispose of small amounts of excess dry concrete, grout, and mortar in the trash.
- ❑ Never dispose of washout into the street, storm drains, drainage ditches, or streams.

Heavy Equipment Operation

Who should use this information?

- Vehicle and Equipment Operators
- Site Supervisors
- General Contractors
- Home Builders
- Developers

Stormwater Pollution from Heavy Equipment on Construction Sites

Poorly maintained vehicles and heavy equipment that leak fuel, oil, antifreeze or other fluids on the construction site are common sources of storm drain pollution. Prevent spills and leaks by isolating equipment from runoff channels, and by watching for leaks and other maintenance problems. Remove construction equipment from the site as soon as possible.

Doing the Job Right Site Planning and Preventive Vehicle Maintenance

- ❑ Designate one area of the construction site, well away from streams or storm drain inlets, for auto and equipment parking, refueling, and routine vehicle and equipment maintenance. Contain the area with berms, sand bags, or other barriers.
- ❑ Maintain all vehicles and heavy equipment. Inspect frequently for and repair leaks.
- ❑ Perform major maintenance, repair jobs, and vehicle and equipment washing off site where cleanup is easier.
- ❑ If you must drain and replace motor oil, radiator coolant, or other fluids on site, use drip pans or drop clot hs to catch drips and spills. Collect all spent fluids, store in separate containers. Recycle them wherever possible, otherwise, dispose of them as hazardous wastes.
- ❑ Do not use diesel oil to lubricate equipment parts, or clean equipment. Use only water for any onsite cleaning.
- ❑ Cover exposed fifth wheel hitches and other oily or greasy equipment during rain events.
- ❑ Use as little water as possible for dust control. Ensure water used doesn't leave silt or discharge to storm drains.

Spill Cleanup

- ❑ Clean up spills immediately when they happen.
- ❑ Never hose down "dirty" pavement or impermeable surfaces where fluids have spilled. Use dry cleanup methods (absorbent materials, cat litter, and/or rags) whenever possible and properly dispose of absorbent materials.
- ❑ Sweep up spilled dry materials immediately. Never attempt to "wash them away" with water, or bury them.
- ❑ Clean up spills on dirt areas by digging up and properly disposing of contaminated soil.
- ❑ Report significant spills to the appropriate local spill response agencies immediately. In Milpitas, dial 9-1-1 if hazardous materials might enter the storm drain.

Earth-Moving and Dewatering Activities

Who should use this information?

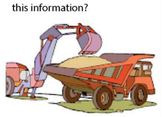

- Bulldozer, Back Hoe, and Grading Machine Operators
- Dump Truck Drivers
- Site Supervisors
- General Contractors
- Home Builders
- Developers

Storm Drain Pollution from Earth-Moving Activities

Soil excavation and grading operations loosen large amounts of soil that can flow or blow into storm drains when handled improperly. Sediments in runoff can clog storm drains, smother aquatic life, and destroy habitats in creeks and the Bay. Effective erosion control practices reduce the amount of runoff crossing a site and slow the flow with check dams or roughened ground surfaces.

Contaminated groundwater is a common problem in the Santa Clara Valley. Depending on soil types and site history, groundwater pumped from construction sites may be contaminated with toxics (such as oil or solvents) or laden with sediments. Any of these pollutants can harm wildlife in creeks or the Bay, or interfere with wastewater treatment plant operation. Discharging sediment-laden water from a dewatering site into any water of the state without treatment is prohibited.

Doing the Job Right General Business Practices

- ❑ Schedule excavation and grading work during dry weather.
- ❑ Perform major equipment repairs away from the job site.
- ❑ When refueling or vehicle/equipment maintenance must be done on site, designate a location away from storm drains.
- ❑ Do not use diesel oil to lubricate equipment parts, or clean equipment.

Practices During Construction

- ❑ Remove existing vegetation only when absolutely necessary. Plant temporary vegetation for erosion control on slopes or where construction is not immediately planned.
- ❑ Protect downslope drainage courses, streams, and storm drains with wattles, or temporary drainage swales. Use check dams or ditches to divert runoff around excavations. Refer to the Regional Water Quality Control Board's Erosion and Sediment Control Field Manua l for proper erosion and sediment control measures, and California Stormwater Quality Association Stormwater Best Management Practice Handbook (construction, 2003)
- ❑ Cover stockpiles and excavated soil with secured tarps or plastic sheeting.

Dewatering Operations

Check for Toxic Pollutants

- ❑ Check for odors, discoloration, or an oily sheen on groundwater.
- ❑ Call your local wastewater treatment agency and ask whether the groundwater must be tested.
- ❑ If contamination is suspected, have the water tested by a certified laboratory.
- ❑ Depending on the test results, you may be allowed to discharge pumped groundwater to the storm drain (if no sediments present) or sanitary sewer. OR, you may be required to collect and haul pumped groundwater offsite for treatment and disposal at an appropriate treatment facility.

Detecting Contaminated Soil or Groundwater

Contaminated groundwater is a common problem in the Santa Clara Valley. It is essential that all contractors and subcontractors involved know what to look for in detecting contaminated soil or groundwater, and testing ponded groundwater before pumping. Watch for any of these conditions:

1. Unusual soil conditions, discoloration or odor.
2. Abandoned underground tanks.
3. Abandoned wells.
4. Buried barrels, debris or trash.

If any of these are found follow the procedures below.

Roadwork and Paving

Who should use this information?

- Road Crews
- Driveway/Sidewalk/Parking Lot Construction Crews
- Seal Coat Contractors
- Operators of Grading Equipment, Paving Machines, Dump Trucks, Concrete Mixers
- Construction Inspectors
- General Contractors
- Developers
- Home Builders

Storm Drain Pollution from Roadwork

Road paving, surfacing, and pavement removal happen right in the street, where there are numerous opportunities for asphalt, saw-cut slurry, or excavated material to illegally enter storm drains. Extra planning is required to store and dispose of materials properly and guard against pollution of storm drains, creeks, and the Bay.

Doing the Job Right General Business Practices

- ❑ Develop and implement erosion/sediment control plans for roadway embankments.
- ❑ Schedule excavation and grading work during dry weather.
- ❑ Check for and repair leaking equipment.
- ❑ Perform major equipment repairs at designated areas in your maintenance yard, where cleanup is easier. Avoid performing equipment repairs at construction sites.
- ❑ When refueling or when vehicle/equipment maintenance must be done on site, designate a location away from storm drains and creeks.
- ❑ Do not use diesel oil to lubricate equipment parts or clean equipment.
- ❑ Recycle used oil, concrete, broken asphalt, etc. whenever possible, or dispose of properly.

During Construction

- ❑ Avoid paving and seal coating in wet weather, or when rain is forecast, to prevent fresh materials from contacting stormwater runoff.
- ❑ Cover and seal catch basins and manholes when applying seal coat, slurry seal, fog seal, or similar materials.
- ❑ Protect drainage ways by using earth dikes, sand bags, or other controls to divert or trap and filter runoff.
- ❑ Never wash excess material fr om exposed aggregate concrete or similar treatments into a street or storm drain. Collect and recycle, or dispose to dirt area.
- ❑ Cover stockpiles (asphalt, sand, etc.) and other construction materials with plastic tarps. Protect from rainfall and prevent runoff with temporary roofs or plastic sheets and berms.
- ❑ Park paving machines over drip pans or absorbent material (cloth, rags, etc.) to catch drips when not in use.
- ❑ Clean up all spills and leaks using "dry" methods (with absorbent materials and/or rags) Dig up, remove, and properly dispose of contaminated soil.
- ❑ Collect and recycle or appropriately dispose of excess abrasive gravel or sand.
- ❑ Avoid over-application by water trucks for dust control.

Asphalt/Concrete Removal

- ❑ Avoid creating excess dust when breaking asphalt or concrete.
- ❑ After breaking up old pave ment, be sure to remove all chunks and pieces. Make sure broken pavement does not come in contact with rainfall or runoff.
- ❑ When making saw cuts, use as little water as possible. Shovel or vacuum saw-cut slurry and remove from the site. Cover or protect storm drain inlets during saw-cutting. Sweep up, and properly dispose of, all residues.
- ❑ Sweep, never hose down streets to clean up tracked dirt. Use a street sweeper or vacuum truck. Do not dump vacuumed liquor in storm drains.

Painting and Application of Solvents and Adhesives

Who should use this information?

- Painters
- Paperhangers
- Plasterers
- Graphic Artists
- Dry Wall Crews
- Floor Covering Installers
- General Contractors
- Home Builders
- Developers
- Homeowners

Storm Drain Pollution from Paints, Solvents, and Adhesives

All paints, solvents, and adhesives contain chemicals that are ha rmful to wildlife in local creeks, San Francisco Bay, and the Pacific Ocean. Toxic chemicals may come from liquid or solid products or from cleaning residues or rags. Paint material and wastes, adhesives and cleaning fluids should be recycled when possible, or disposed of properly to prevent these materials from flowing into storm drains and watercourses.

Doing the Job Right Handling Paint Products

- ❑ Keep all liquid paint products and wastes away from the gutter, street, and storm drains. Liquid residues from paints, thinners, solvents, glues, and cleaning fluids are hazardous wastes and must be disposed of as hazardous.
- ❑ Wash water from painted buildings constructed before 1978 can contain high amounts of lead, even if paint chips are not present. Before you begin stripping paint or cleaning pre-1978 building exteriors with water under high pressure, test paint for lead by taking paint scrapings to a local laboratory. See Yellow Pages for a state-certified laboratory.
- ❑ If there is loose paint on the building, or if the paint tests positive for lead, block storm drains. Check with the wastewater treatment plant to determine whether you may discharge water to the sanitary sewer, or if you must send it offsite for disposal as hazardous waste.

Paint Removal

- ❑ Paint chips and dust from non-hazardous dry stripping and sand blasting may be swept up or collected in plastic drop cloths and disposed of as trash.
- ❑ Chemical paint stripping residue and chips and dust from marine paints or paints containing lead, mercury or tributyl tin must be disposed of as hazardous wastes. Lead based paint removal requires a state-certified contractor.
- ❑ When stripping or cleaning building exteriors with high-pressure water, block storm drains. Direct wash water onto a dirt area to find out if you can collect (mop or vacuum) building cleaning water and dispose to the sanitary sewer. Sampling of the water may be required to assist the wastewater treatment authority in making its decision.

Painting Cleanup

- ❑ Never clean brushes or rinse paint containers into a street, gutter, storm drain, French drain, or stream.
- ❑ For water-based paints, paint out brushes to the extent possible, and rinse into a drain that goes to the sanitary sewer. Never pour paint down a storm drain. Dispose of excess liquids and residue as hazardous waste.
- ❑ For oil-based paints, paint out brushes to the extent possible and clean with thinner or solvent in a proper container. Filter and reuse thinners and solvents. Dispose of excess liquids and residue as hazardous waste.
- ❑ When thoroughly dry, empty paint cans, used brushes, rags, and drop cloths may be disposed of as garbage in a sanitary landfill. Leave lids off paint cans so the refuse collector can see that they are empty. Empty, dry paint cans also may be recycled as metal.
- ❑ Dispose of empty aerosol paint cans as hazardous waste or at household hazardous waste collection events.

Recycle/Reuse Leftover Paints Whenever Possible

- ❑ Donate excess water-based (latex) paint for reuse.
- ❑ Reuse leftover oil-based paint. Dispose of non-recyclable thinners, sludge and unwanted paint, as hazardous waste.
- ❑ Unopened cans of paint may be able to be returned to the paint vendor. Check with the vendor regarding its "buy-back" policy.

General Construction and Site Supervision

Who should use this information?

- General Contractors
- Site Supervisors
- Inspectors
- Home Builders
- Developers
- Homeowners

Storm Drain Pollution from Construction Activities

Construction sites are common sources of storm water pollution. Materials and wastes that blow or wash into a storm drain, gutter, or street have a direct impact on local creeks and the Bay.

As a contractor, or site supervisor, owner or operator of a site, you may be responsible for any environmental damage caused by your subcontractors or employees.

Doing the Job Right General Principles

- ❑ Keep an orderly site and ensure good housekeeping practices are used.
- ❑ Maintain equipment properly.
- ❑ Cover materials when they are not in use.
- ❑ Keep materials away from streets, storm drains and drainage channels.
- ❑ Ensure dust control water doesn't leave site or discharge to storm drains.

Advance Planning To Prevent Pollution

- ❑ Schedule excavation and grading activities for dry weather periods. To reduce soil erosion, plant temporary vegetation or place other erosion controls before rain begins. Use the Erosion and Sediment Control Field Manual , available form the Regional Water Quality Control Board San Francisco Bay Region, as a reference.
- ❑ Control the amount of runoff crossing your site (especially during excavation!) by using berms or temporary or permanent drainage ditches to divert water flow around the site. Reduce stormwater runoff velocities by constructing temporary check dams or berms where appropriate.
- ❑ Train your employees and subcontractors. Make these brochures available to everyone who works on the construction site. Inform subcontractors about the stormwater requirements and their own responsibilities.

Good Housekeeping Practices

- ❑ Designate one area of the site for auto parking, vehicle refueling, and routine equipment maintenance. The designated area should be well away from streams or storm drain inlets, bermed if necessary. Make major repairs off site.
- ❑ Keep materials out of the rain – prevent runoff contamination at the source. Cover exposed piles of soil or construction materials with plastic sheeting or temporary roofs. Before it rains, sweep and remove materials from surfaces that drain to storm drains, creeks, or channels.
- ❑ Keep pollutants off exposed surfaces. Place trash cans and recycling receptacles around the site to minimize litter.
- ❑ Clean up leaks, drips and other spills immediately so they do not contaminate soil or groundwater or leave residue on paved surfaces.
- ❑ Never hose down "dirty" pavement or surfaces where materials have spilled.
- ❑ Use dry cleanup methods whenever possible. If you must use water, use just enough to keep the dust down.
- ❑ Cover and maintain dumpsters. Check frequently for leaks. Place dumpsters under roofs or cover with tarps or plastic sheeting secured around the outside of the dumpster. Never clean out a dumpster by hosing it down on the construction site.
- ❑ Place portable toilets away from storm drains. Make sure portable toilets are in good working order. Check frequently for leaks .

Materials/Waste Handling

- ❑ Practice Source Reduction -- minimize waste when you order materials. Order only the amount you need to finish the job.
- ❑ Use recyclable materials whenever possible. Arrange for pick-up of recyclable materials such as concrete, asphalt, scrap metal, solvents, degreasers, cleared vegetation, paper, rock, and vehicle maintenance materials such as used oil, antifreeze, batteries, and tires.
- ❑ Dispose of all wastes properly. Many construction materials and wastes, including solvents, water-based paints, vehicle fluids, broken asphalt and concrete, wood, and cleared vegetation can be recycled.
  Materials that cannot be recycled must be taken to an appropriate landfill or disposed of as hazardous waste.
  Never bury waste materials or leave them in the street or near a creek or stream bed.

Permits

- ❑ In addition to local grading and building permits, you will need to obtain coverage under the State's General Construction Activity Stormwater Permit if your construction site's disturbed area totals 1 acre or more. Information on the General Permit can be obtained from the Regional Water Quality Control Board.

Landscaping,Gardening, And Pool Maintenance

Who should use this information?

- Landscapers
- Gardeners
- Swimming Pool/Spa Service and Repair Workers
- General Contractors
- Home Builders
- Developers
- Homeowners

Storm Drain Pollution from Landscaping and Swimming Pool Maintenance

Many landscaping activities expose soils and increase the likelihood that earth and garden chemicals will run off into the storm drains during irrigation or when it rains. Swimming pool water containing chlorine and copper-based algaecides should never be discharged to storm drains. These chemicals are toxic to aquatic life.

Doing the Job Right General Business Practices

- ❑ Protect stockpiles (e.g. asphalt, sand, or soil) and landscaping materials from wind and rain by storing them under tarps or secured plastic sheeting.
- ❑ Store pesticides, fertilizers, and other chemicals indoors or in a shed or storage cabinet.
- ❑ Schedule grading and excavation projects during dry weather.
- ❑ Use temporary check dams or ditches to divert runoff away from storm drains.
- ❑ Protect storm drains with sandbags or other sediment controls.
- ❑ Revegetation is an excellent form of erosion control for any site. Replant as soon as possible with temporary vegetation such as grass seed.

Landscaping/Garden Maintenance

- ❑ Consider using Integrated Pest Management Techniques. Use pesticides sparingly, according to instructions on the label. Rinse empty containers, and use rinsewater as product. Dispose of rinsed, empty containers in the trash.
- ❑ Dispose of unused pesticides as hazardous waste.
- ❑ Collect lawn and garden clippings, pruning waste, and tree trimmings. Chip if necessary, and compost if possible.
- ❑ Do not blow or rake leaves, etc. into the street, or place yard waste in gutters or on dirt shoulders. Sweep up any leaves, litter or residue in gutters or on street.

Pool/Fountain/Spa Maintenance

Draining pools or spas

- ❑ When it's time to drain a pool, spa, or fountain, please be sure to call your local wastewater treatment plant before you start for further guidance on flow rate restrictions, backflow prevention, and handling special cleaning waste (such as acid wash). Discharge flows should be kept to the low levels typically possible through a garden hose. Higher flow rates may be prohibited by local ordinance.
- ❑ Never discharge pool or spa water to a street or storm drain; discharge to a sanitary sewer cleanout.
- ❑ If possible, when emptying a pool or spa, let chlorine dissipate for a few days and then recycle/reuse water by draining it gradually onto a landscaped area. OR
- ❑ San Jose/Santa Clara Water Pollution Control Plant (408) 945-5300. You may be able to discharge to the sanitary sewer by running the hose to a utility sink or sewer pipe clean-out.
- ❑ Do not use copper-based algaecides Control algae with chlorine or other alternatives, such as sodium bromide.

Filter Cleaning

- ❑ Never clean a filter in the street or near a storm drain. Rinse cartridge and diatomaceous earth filters onto a dirt area, and spade filter residue into soil. Dispose of spent diatomaceous earth in the garbage.
- ❑ If there is no suitable dirt call San Jose/Santa Clara Water Pollution Control Plant (408) 945-5300 for instructions on discharging filter backwash or rinse water to the sanitary sewer.

Milpitas Municipal Code (MMC) 2017

XI-16-11 Accidental Discharge - Notification of Discharge

(a) All persons shall notify the City by telephone immediately by dialing 911 upon accidentally discharging any material other than an acceptable discharge into a storm drain or watercourse to enable countermeasures to be taken by the City to minimize damage to storm drains and the receiving waters. Prohibited discharges include but are not limited to:
(1) Sewage;
(2) Discharges of wash water resulting from the cleaning of exterior surfaces and pavement, or the equipment and other facilities of any commercial business, or any other public or private facility;
(3) Discharges of runoff from material storage areas, including containing chemicals, fuels, or other potentially polluting or hazardous materials;
(4) Discharges of pool or fountain water containing chlorine, biocides, or other chemicals; discharges of pool or fountain filter backwash water;
(5) Discharges of sediment, pet waste, vegetation clippings, or other landscape or construction-related wastes; and
(6) Discharges of food-related wastes (e.g., grease, fish processing, and restaurant kitchen mat and trash bin wash water, etc.).
The City, at its sole option, may direct the person or persons responsible for the discharge to perform cleanup activities when it is deemed by the City that the person or persons have the capability to perform such activities. All violations shall be corrected in a timely manner before the next rain event, but no longer than ten (10) business days after the violations are discovered.
(b) The person deemed by the City responsible for the discharge shall, within five (5) days of the date of occurrence, provide a detailed written statement to the City Manager or his or her designee describing the causes of the accidental discharge and the measures being taken to prevent future occurrences. Such notification will not relieve persons of liability for violations of this Chapter or for any fines imposed on the City on account thereof under Section 13350 of the California Water Code, or for violation of Section 5650 of the California Fish and Wildlife Code, or any other applicable provisions of State or federal law.
(c) Persons deemed by the City responsible for the discharge are responsible for all expenses resulting from the discharge, including, but not limited to, damages, fines, and costs of clean-up, whether performed by their own efforts, City efforts, or the efforts of a third party. Reimbursement of City efforts shall be determined by the number of personnel required and amount of time necessary for the coordination of City efforts and actual clean-up. All personnel costs shall be charged at their current fully-burdened rate, including overtime, plus any and all other direct costs.

XI-16-14 Enforcement and Penalties

(a) Criminal Penalties. Violations of the provisions of this Chapter shall be subject to criminal penalties as provided in Section I-1-4.09-1 of this Code.

(b) Judicial Civil Penalties. Any person who intentionally or negligently violates any provision of this Chapter or any provision of any permit or certificate issued pursuant to this Chapter shall be civilly liable to the city in a sum not to exceed twenty-five thousand dollars per day for each day in which such violation occurs.

(c) Administrative Citations. When the City Manager and/or his or her designee determines that one or more violations of this Chapter have occurred an administrative citation may be issued pursuant to the procedures set forth in Sections V-500-8.00 through V-500-8.06. The schedule of fines for administrative citations issued for violations of this Chapter shall be set forth in the schedule of fines established by resolution of the City Council.

(d) Notice of Noncompliance. If the severity of the violation warrants immediate action, a Notice of Noncompliance or Stop Work Notice shall be issued, permits may be suspended or revoked, Stormwater Pollution Prevention Plans may be found in noncompliance, and corrective actions may be implemented in accordance with Section 11 of this Chapter. For all other cases, including those sites or projects where a stormwater pollution prevention plan is not required, the City Manager or his or her designee shall issue a Notice of Noncompliance that shall enumerate the violations found. The City Manager or his or her designee shall order compliance by a date or hour certain at his or her discretion. If the violations are not abated in the time period identified in the Notice of Noncompliance, the site shall be deemed to be in noncompliance with federal, State and local laws and the City Manager or his or her designee shall have the authority to issue a Stop Work Notice and/or deem the Stormwater Pollution Prevention Plan inadequate. If a Stop Work Notice is issued, corrective actions must be performed until the site has achieved compliance. Corrective actions may include revision and resubmission of any Plan, including, but not limited to, Stormwater Pollution Prevention Plan, Erosion Control Plan or Grading Plan. The City Manager or his or her designee may also require a discharger that has violated any discharge limits contained in this Chapter to install a temporary system for the capture, testing, and release of stormwater.

(e) Suspension of Utility Service. The City may, without prior notice, suspend water service, sanitary sewer service, and/or storm drain discharge access to a person discharging to the storm drain system when such suspension is necessary to stop an actual or threatened discharge which presents, or may present, imminent and substantial danger to the environment or to the health or welfare of persons; or presents, or may present, imminent and substantial danger to the storm drain system.

(f) For construction projects where a total of three or more Stop Work Notices and Notices of Noncompliance for urban runoff violations have been issued, the City Manager or his or her designee may require the contractor to hire a Qualified SWPPP Developer (QSD) or Qualified SWPPP Practitioner (QSP) within three business days. The QSD/QSP shall establish effective BMPs, provide guidance for improvement for the duration of the project, and certify compliance. A Stop Work Notice shall be issued for failure to comply.

(g) Remedies Cumulative. The remedies provided in this section are cumulative and not exclusive, and shall be in addition to any other penalty provided for in this Chapter and shall be in addition to all other remedies available to the City under State and federal law.

PROJECT ADDRESS:

PROJECT NAME:

BLUEPRINT FOR A CLEAN BAY
BUILDING & SAFETY DEPARTMENT

SHEET
CB-1

DESIGN EVEREST
CONSULTING ENGINEERS
365 FLOWER LANE
MOUNTAIN VIEW, CA 94043
PHONE: (888) 311-3015 FAX: (650) 695-1801

2387 MATTOS DRIVE
ADU BUILDING PERMIT

REV	DATE	REMARKS
0	02.14.2023	BUILDING PERMIT
1	05.13.2023	REVISION 1
2	07.24.2023	REVISION 2
3	10.04.2023	REVISION 3

LICENSED ARCHITECT
NATHAN CONRAD
C36505
5-31-2025
STATE OF CALIFORNIA

SIGN DATE:
DATE:
SCALE:
DRAWN BY: Author
CKD BY: Checker
PROJECT#: 202212048

A0.2
BLUEPRINT FOR A CLEAN BAY

CITY OF MILPITAS
Building Safety Department
455 E. Calaveras Blvd.
Milpitas, CA 95035
408-586-3240
www.milpitas.gov

2022 CALGREEN MANDATORY MEASURES CHECKLIST (RESIDENTIAL)

This checklist applies to newly constructed buildings, and additions or alterations of existing residential buildings where the addition or alteration increases the building's conditioned area, volume, or size. The requirements shall apply only to and/or within the specific area of the addition or alteration. (301.1.1)

Parenthetical references are to the noted section of the *2022 California Green Building Code*, unless stated otherwise.

Feature or Measure	Required
RESIDENTIAL MANDATORY MEASURES	
Site Development (4.106)	
Projects less than one acre: Projects which disturb less than one acre of soil and are not part of a larger common plan of development which in total disturbs one acre or more, shall manage storm water drainage during construction. **Projects one acre or more:** Newly constructed projects or additions shall comply with Milpitas Municipal Code Title 2 Chapter 13 for erosion and sediment controls, the City of Milpitas Enforcement Response Plan for Construction Site Control, and the California Regional Water Quality Control Board San Francisco Bay Region Municipal Regional Stormwater NPDES Permit requirements.	X
Construction plans shall indicate how the site grading or drainage system will manage all surface water flows to keep water from entering buildings.	X
Electric vehicle (EV) charging for new construction. New construction shall comply with sec. 4.106.4.1 or 4.106.4.2 to facilitate future installation and use of EV chargers. Electric vehicle supply equipment (EVSE) shall be installed in accordance with *California Electrical Code* (CEC), Article 625.	N/A
New one- and two-family dwellings and Townhouses with private garages. Each dwelling unit shall be installed with listed raceways capable of supporting EVSE.	N/A
New multifamily dwellings, hotels, and motels. **EV Capable.** 10% of the total parking spaces on a building site shall be EV spaces capable of supporting future Level II EVSE.	N/A
EV Ready. 25% of the total parking spaces shall be equipped with low power Level 2 EV charging receptacles.	N/A
20 or more units. 5% of the total parking spaces shall be equipped with Level 2 EVSE.	N/A
ENERGY EFFICIENCY (4.201)	
For the purposes of mandatory energy efficiency standards in this code, the California Energy Commission will continue to adopt mandatory standards.	X
WATER EFFICIENCY AND CONSERVATION	
Indoor Water Use (4.303)	
All noncompliant plumbing fixtures in any single-family and multi-family residential real property shall be replaced with water-conserving plumbing fixtures. Plumbing fixture replacement is required prior to final inspection. (See also California Civil Code sec. 1101.4 and 1101.5)	N/A
Water closets. The effective flush volume of all water closets shall not exceed 1.28 gpf. Tank-type water closets shall be certified to the performance criteria of the U.S. EPA WaterSense Specification for Tank-type Toilets. **Note:** The effective flush volume of dual flush toilets is defined as the composite, average flush volume of two reduced flushes and one full flush.	X
Urinals. The effective flush volume of wall-mounted urinals shall not exceed 0.125 gpf, and other urinals shall not exceed 0.5 gpf.	N/A

Single showerheads. Showerheads shall have a max. flow rate of not more than 1.8 gpm at 80 psi. Showerheads shall be certified to the performance criteria of the U.S. EPA WaterSense Specification for Showerheads.	X
Multiple showerheads serving one shower. When a shower is served by more than one showerhead, the combined flow rate of all the showerheads and/or other shower outlets controlled by a single valve shall not exceed 1.8 gpm at 80 psi, or the shower shall be designed to allow only one shower outlet to be in operation at a time.	N/A
Residential lavatory faucets. The max. flow rate of residential lavatory faucets shall not exceed 1.2 gpm at 60 psi. The min. flow rate of residential lavatory faucets shall not be less than 0.8 gpm at 20 psi.	X
Lavatory faucets in common and public use areas. The max. flow rate of lavatory faucets installed in common and public use areas (outside of dwellings or sleeping units) in residential buildings shall not exceed 0.5 gpm at 60 psi.	N/A
Metering faucets. Metering faucets when installed in residential buildings shall not deliver more than 0.2 gallons per cycle.	N/A
Kitchen faucets. The max. flow rate of kitchen faucets shall not exceed 1.8 gpm at 60 psi.	X
Outdoor Water Use (4.304)	
Outdoor potable water use in landscape areas. Residential developments shall comply with a local water efficient landscape ordinance or the current California Department of Water Resources' Model Water Efficient Landscape Ordinance (MWELO), whichever is more stringent.	N/A
Water Reuse Systems (4.305)	
(RESERVED)	
MATERIAL CONSERVATION AND RESOURCE EFFICIENCY	
Enhanced Durability and reduced Maintenance (4.406)	
Rodent proofing. Annular spaces around pipes, electric cables, conduits, or other openings in sole/bottom plates at exterior walls shall be protected against the passage of rodents by closing such openings with cement mortar, concrete masonry, or similar method acceptable to the enforcing agency.	X
Construction Waste Reduction, Disposal and Recycling (4.408)	
Construction waste management. Recycle and/or salvage for reuse a minimum of 65% of the nonhazardous construction and demolition waste in accordance with either sec. 4.408.2, 4.408.3 or 4.408.4, or meet a more stringent local construction and demolition waste management ordinance.	X
Documentation. Documentation shall be provided to the City of Milpitas Solid Waste Division which demonstrates compliance prior to final inspection.	X
Building Maintenance and Operation (4.410)	
O&M Manual. An operation and maintenance manual shall be available in the building at the time of final inspection.	X
Recycling by Occupants. Where 5 or more multifamily dwelling units are constructed on a building site, provide readily accessible area(s) that serves all buildings on the site and are identified for the depositing, storage, and collection of nonhazardous materials for recycling, including (at a minimum) paper, corrugated cardboard, glass, plastics, organic waste, and metals, or meet a lawfully enacted local recycling ordinance, if more restrictive.	N/A
ENVIRONMENTAL QUALITY	
Fireplaces (4.503)	
Bay Area Air Quality Management District. Only gas fireplaces, pellet-fueled devices, or E.P.A. certified wood-burning devices may be installed in new buildings, added to or replace wood-burning devices in existing buildings, or be used when reconstructing or repairing a wood-burning device [Milpitas Municipal Code II-15].	N/A
Gas fireplace shall be a direct-vent sealed-combustion type. Woodstove or pellet stove shall comply with US EPA New Source Performance Standards (NSPS) emission limits.	N/A

Pollutant Control (4.504)	
Cover vent openings. At the time of rough installation, during storage on the construction site and until final startup of the heating, cooling and ventilation equipment, all duct and other related air distribution component openings shall be covered.	X
Finish material pollutant control. Adhesives, sealants, and caulks shall be compliant with VOC limits as shown in Table 4.504.1 or 4.504.2, as applicable.	X
Aerosol adhesives and smaller unit sizes of adhesives and sealant or caulking compounds (no more than 1 pound in weight no more than 16 fluid ounces) shall comply with statewide VOC standards and other requirements.	X
Paints and coatings. Paints, stains, and other coatings shall be compliant with VOC limits as shown in Table 4.504.3.	X
Aerosol Paints and Coatings. Shall meet the Product-Weighted MIR limits for ROC and comply with the BAAQMD percent VOC by weight of product limits of Regulation 8, Rule 49.	X
Carpet. All carpet and carpet cushion shall meet the requirements of the CDPH "Standard Method for the Testing of Evaluation of Volatile Organic Chemical Emissions from Indoor Sources Using Environmental Chambers".	X
Carpet adhesive. Shall meet the requirements of Table 4.504.1.	X
Resilient flooring systems. At least 80% of floor area receiving resilient flooring shall meet the requirements of CDPH "Standard Method for the Testing of Evaluation of Volatile Organic Chemical Emissions from Indoor Sources Using Environmental Chambers".	X
Composite wood products. Hardwood plywood, particleboard, and medium density fiberboard (MDF) used on interior or exterior of the building shall comply with formaldehyde emission limits per Table 4.504.5.	X
Documentation. Verification of compliance hall be provided to the City building inspector.	X
Interior Moisture Control (4.505)	
Concrete Slab Foundations. Concrete slab foundations required to have a vapor retarder by the California Building Code or the California Residential Code shall have a capillary break installed in compliance with section 4.505.2.1.	X
Moisture content of building materials. Building materials with visible signs of water damage shall not be installed.	X
Wall and floor framing shall not to exceed 19% moisture content at time of enclosure. Moisture content shall be verified in compliance with section 4.505.3.	X
Insulation products which are visibly wet or have a high moisture content shall be replaced or allowed to dry prior to enclosure.	X
Indoor Air Quality and Exhaust (4.506)	
Bathroom exhaust fans. Each bathroom shall be mechanically ventilated, and exhaust fans shall be ENERGY STAR rated and ducted to terminate outside.	X
Unless functioning as a component of a whole house ventilation system, bathroom exhaust fans must be controlled by a humidity control adjustable between a relative humidity range of ≤50% to max. 80%.	X
Environmental Comfort (4.507)	
Heating and air-conditioning systems. Shall be sized, designed, and have their equipment selected using the following methods: 1. Establish heat loss and heat gain values according to ANSI/ACCA 2 Manual J-2016 (Residential Load Calculation), ASHRAE handbooks or other equivalent design methods. 2. Size duct systems according to ANSI/ACCA 1 Manual D-2016 (Residential Duct Systems) or other equivalent design software or methods. 3. Select heating and cooling equipment according to ANSI/ACCA 3 Manual S-2014 or other equivalent design methods.	X

INSTALLER AND SPECIAL INSPECTOR QUALIFICATIONS	
Qualifications (702)	
Installer training. HVAC system installers are trained and certified in the proper installation of HVAC systems including ducts and equipment by a nationally or regionally recognized training or certification program.	X
Special inspection. Special inspectors employed by the owner or owner's agent shall demonstrate competence to the satisfaction of the enforcing agency for the particular type of inspection to be performed and shall have a certification or qualifications acceptable to the enforcing agency. **Note:** Special Inspectors shall be independent entities with no financial interest in the materials or the project they are inspecting for compliance with CALGreen.	X
Verifications (703)	
Documentation. Documentation used to show compliance with CALGreen shall include, but is not limited to, construction documents, plans, specifications, builder or installer certification, inspection reports, or other methods acceptable to the enforcing agency, which demonstrate substantial conformance.	X

4.504.5 Composite Wood Products

Hardwood plywood, particleboard and medium density fiberboard composite wood products used on the interior or exterior of the building shall meet the requirements for formaldehyde as specified in ARB's Air Toxics Control Measure for Composite Wood (17 CCR 93120 et seq.) as shown in Table 4.504.5.

TABLE 4.504.5

FORMALDEHYDE LIMITS[1] Maximum Formaldehyde Emissions in Parts per Million

PRODUCT	CURRENT LIMIT
Hardwood plywood veneer core	0.05
Hardwood plywood composite core	0.05
Particleboard	0.09
Medium density fiberboard	0.11
Thin medium density fiberboard[2]	0.13

1. Values in this table are derived from those specified by the California Air Resources Board, Air Toxics Control Measure for Composite Wood as tested in accordance with ASTM E1333. For additional information, see *California Code of Regulations*, Title 17, Sections 93120 through 93120.12.
2. Thin medium density fiberboard has a maximum thickness of $^{5}/_{16}$ inch (8 mm).

4.504.5.1 Documentation
Verification of compliance with this section shall be provided as requested by the enforcing agency. Documentation shall include at least one of the following:

1. Product certifications and specifications.
2. Chain of custody certifications.
3. Product labeled and invoiced as meeting the Composite Wood Products regulation (see CCR, Title 17, Section 93120, *et seq.*).
4. Exterior grade products marked as meeting the P5-1 or P5-2 standards of the Engineered Wood Association, the Australian AS/NZS 2269, European 636 3S, and Canadian CSA O121, CSA O151, CSA O153 and CSA O325 standards.
5. Other methods acceptable to the enforcing agency.

4.504.1 Covering of Duct Openings and Protection of Mechanical Equipment During Construction

At the time of rough installation, during storage on the construction site and until final startup of the heating, cooling and ventilating equipment, all duct and other related air distribution component openings shall be covered with tape, plastic, sheetmetal or other methods acceptable to the enforcing agency to reduce the amount of water, dust and debris, which may enter the system.

TABLE 4.504.1

ADHESIVE VOC LIMIT[1, 2] Less Water and Less Exempt Compounds in Grams per Liter

ARCHITECTURAL APPLICATIONS	VOC LIMIT
Indoor carpet adhesives	50
Carpet pad adhesives	50
Outdoor carpet adhesives	150
Wood flooring adhesive	100
Rubber floor adhesives	60
Subfloor adhesives	50
Ceramic tile adhesives	65
VCT and asphalt tile adhesives	50
Drywall and panel adhesives	50
Cove base adhesives	50
Multipurpose construction adhesives	70
Structural glazing adhesives	100
Single-ply roof membrane adhesives	250
Other adhesives not specifically listed	50
SPECIALTY APPLICATIONS	
PVC welding	510
CPVC welding	490
ABS welding	325
Plastic cement welding	250
Adhesive primer for plastic	550
Contact adhesive	80
Special purpose contact adhesive	250
Structural wood member adhesive	140
Top and trim adhesive	250
SUBSTRATE SPECIFIC APPLICATIONS	
Metal to metal	30

Plastic foams	50
Porous material (except wood)	50
Wood	30
Fiberglass	80

1. If an adhesive is used to bond dissimilar substrates together, the adhesive with the highest VOC content shall be allowed.
2. For additional information regarding methods to measure the VOC content specified in this table, see South Coast Air Quality Management District Rule 1168.

4.504.2 Finish Material Pollutant Control

Finish materials shall comply with this section.

TABLE 4.504.2

SEALANT VOC LIMIT Less Water and Less Exempt Compounds in Grams per Liter

SEALANTS	VOC LIMIT
Architectural	250
Marine deck	760
Nonmembrane roof	300
Roadway	250
Single-ply roof membrane	450
Other	420
SEALANT PRIMERS	
Architectural	
Nonporous	250
Porous	775
Modified bituminous	500
Marine deck	760
Other	750

4.504.2.1 Adhesives, Sealants and Caulks
Adhesives, sealants and caulks used on the project shall meet the requirements of the following standards unless more stringent local or regional air pollution or air quality management district rules apply:

1. Adhesives, adhesive bonding primers, adhesive primers, sealants, sealant primers and caulks shall comply with local or regional air pollution control or air quality management district rules where applicable or SCAQMD Rule 1168 VOC limits, as shown in Table 4.504.1 or 4.504.2, as applicable. Such products also shall comply with the Rule 1168 prohibition on the use of certain toxic compounds (chloroform, ethylene dichloride, methylene chloride, perchloroethylene and trichloroethylene), except for aerosol products, as specified in Subsection 2 below.
2. Aerosol adhesives, and smaller unit sizes of adhesives, and sealant or caulking compounds (in units of product, less packaging, which do not weigh more than 1 pound and do not consist of more than 16 fluid ounces) shall comply with statewide VOC standards and other requirements, including prohibitions on use of certain toxic compounds, of *California Code of Regulations*, Title 17, commencing with Section 94507.

4.504.2.2 Paints and Coatings
Architectural paints and coatings shall comply with VOC limits in Table 1 of the ARB Architectural Suggested Control Measure, as shown in Table 4.504.3, unless more stringent local limits apply. The VOC content limit for coatings that do not meet the definitions for the specialty coatings categories listed in Table 4.504.3 shall be determined by classifying the coating as a Flat, Nonflat or Nonflat-high Gloss coating,

4.504.3 Carpet Systems

All carpet installed in the building interior shall meet the requirements of the California Department of Public Health, "Standard Method for the Testing and Evaluation of Volatile Organic Chemical Emissions from Indoor Sources Using Environmental Chambers," Version 1.2, January 2017 (Emission testing method for California Specification 01350).

See California Department of Public Health's website for certification programs and testing labs.

https://www.cdph.ca.gov/Programs/CCDPHP/DEODC/EHLB/IAQ/Pages/VOC.aspx

TABLE 4.504.3

VOC CONTENT LIMITS FOR ARCHITECTURAL COATINGS[2, 3] Grams of VOC per Liter of Coating, Less Water and Less Exempt Compounds

COATING CATEGORY	VOC LIMIT
Flat coatings	50
Nonflat coatings	100
Nonflat-high gloss coatings	150
SPECIALTY COATINGS	
Aluminum roof coatings	400
Basement specialty coatings	400
Bituminous roof coatings	50
Bituminous roof primers	350
Bond breakers	350
Concrete curing compounds	350
Concrete/masonry sealers	100
Driveway sealers	50
Dry fog coatings	150
Faux finishing coatings	350
Fire resistive coatings	350
Floor coatings	100
Form-release compounds	250
Graphic arts coatings (sign paints)	500
High temperature coatings	420
Industrial maintenance coatings	250
Low solids coatings[1]	120
Magnesite cement coatings	450
Mastic texture coatings	100
Metallic pigmented coatings	500

Multicolor coatings	250
Pretreatment wash primers	420
Primers, sealers and undercoaters	100
Reactive penetrating sealers	350
Recycled coatings	250
Roof coatings	50
Rust preventative coatings	250
Shellacs	
Clear	730
Opaque	550
Specialty primers, sealers and undercoaters	100
Stains	250
Stone consolidants	450
Swimming pool coatings	340
Traffic marking coatings	100
Tub and tile refinish coatings	420
Waterproofing membranes	250
Wood coatings	275
Wood preservatives	350
Zinc-rich primers	340

1. Grams of VOC per liter of coating, including water and including exempt compounds.
2. The specified limits remain in effect unless revised limits are listed in subsequent columns in the table.
3. Values in this table are derived from those specified by the California Air Resources Board, Architectural Coatings Suggested Control Measure, February 1, 2008. More information is available from the Air Resources Board.

4.504.3.1 Carpet Cushion
All carpet cushion installed in the building interior shall meet the requirements of the California Department of Public Health, "Standard Method for the Testing and Evaluation of Volatile Organic Chemical Emissions from Indoor Sources Using Environmental Chambers," Version 1.2, January 2017 (Emission testing method for California Specification 01350).

See California Department of Public Health's website for certification programs and testing labs.

https://www.cdph.ca.gov/Programs/CCDPHP/DEODC/EHLB/IAQ/Pages/VOC.aspx

4.504.3.2 Carpet Adhesive
All carpet adhesive shall meet the requirements of Table 4.504.1.

DESIGN EVEREST
CONSULTING ENGINEERS
365 FLOWER LANE
MOUNTAIN VIEW, CA 94043
PHONE: (888) 311-3015 FAX: (650) 695-1801

2387 MATTOS DRIVE
ADU BUILDING PERMIT

REV	DATE	REMARKS
0	02.14.2023	BUILDING PERMIT
1	05.13.2023	REVISION 1
2	07.24.2023	REVISION 2
3	10.04.2023	REVISION 3

LICENSED ARCHITECT
NATHAN CONRAD
C36505
5-31-2025
STATE OF CALIFORNIA

SIGN DATE:
DATE:
SCALE:
DRAWN BY: Author
CKD BY: Checker
PROJECT#: 202212048

A0.3

CALGREEN MANDATORY MEASURES

GENERAL INFORMATION					
01	Project Name	2383 Mattos Drive - ADU			
02	Run Title	Title 24 Analysis			
03	Project Location	2383 Mattos Drive			
04	City	Milpitas	05	Standards Version	2022
06	Zip code	95035	07	Software Version	EnergyPro 9.2
08	Climate Zone	4	09	Front Orientation (deg/ Cardinal)	252
10	Building Type	Single family	11	Number of Dwelling Units	1
12	Project Scope	Newly Constructed	13	Number of Bedrooms	2
14	Addition Cond. Floor Area (ft^2)	0	15	Number of Stories	2
16	Existing Cond. Floor Area (ft^2)	n/a	17	Fenestration Average U-factor	0.33
18	Total Cond. Floor Area (ft^2)	998.8	19	Glazing Percentage (%)	18.27%
20	ADU Bedroom Count	n/a	21	ADU Conditioned Floor Area	n/a
22	Fuel Type	Natural gas	23	Occupancy U:	No

COMPLIANCE RESULTS	
01	Building Complies with Computer Performance
02	This building incorporates features that require field testing and/or verification by a certified HERS rater under the supervision of a CEC-approved HERS provider.
03	This building incorporates one or more Special Features shown below

ENERGY DESIGN RATINGS	Energy Design Ratings			Compliance Margins		
	Source Energy (EDR1)	Efficiency[1] EDR (EDR2efficiency)	Total[2] EDR (EDR2total)	Source Energy (EDR1)	Efficiency[1] EDR (EDR2efficiency)	Total[2] EDR (EDR2total)
Standard Design	36.1	38.8	31.5			
Proposed Design	32.6	37.1	30.5	3.5	1.7	1
RESULT[3]: PASS						

[1]Efficiency EDR includes improvements like a better building envelope and more efficient equipment
[2]Total EDR includes efficiency and demand response measures such as photovoltaic (PV) system and batteries
[3]Building complies when source energy, efficiency and total compliance margins are greater than or equal to zero and unmet load hour limits are not exceeded

- Standard Design PV Capacity: 2.04 kWdc
- PV System resized to 2.04 kWdc (a factor of 2.042) to achieve 'Standard Design PV' PV scaling.

ENERGY USE SUMMARY						
Energy Use	Standard Design Source Energy (EDR1) (kBtu/ft^2 -yr)	Standard Design TDV Energy (EDR2) (kTDV/ft^2 -yr)	Proposed Design Source Energy (EDR1) (kBtu/ft^2 -yr)	Proposed Design TDV Energy (EDR2) (kTDV/ft^2 -yr)	Compliance Margin (EDR1)	Compliance Margin (EDR2)
Space Heating	2.15	9.62	1.9	14.69	0.25	-5.07
Space Cooling	0.61	23.79	0.52	25.01	0.09	-1.22
IAQ Ventilation	0.4	4.24	0.4	4.24	0	0
Water Heating	2.35	24.37	1.32	15.38	1.03	8.99
Self Utilization/Flexibility Credit				0		0
Efficiency Compliance Total	5.51	62.02	4.14	59.32	1.37	2.7
Photovoltaics	-1.79	-60.66	-1.79	-60.66		
Battery			0	0		
Flexibility						
Indoor Lighting	0.86	8.43	0.86	8.43		
Appl. & Cooking	5.21	33.95	5.19	33.8		
Plug loads	4.53	47.1	4.53	47.1		
Outdoor Lighting	0.2	1.81	0.2	1.81		
TOTAL COMPLIANCE	14.52	92.65	13.13	89.8		

ENERGY USE INTENSITY	Standard Design (kBtu/ft^2 - yr)	Proposed Design (kBtu/ft^2 - yr)	Compliance Margin (kBtu/ft^2 - yr)	Margin Percentage
Gross EUI[1]	20.43	18.56	1.87	9.15
Net EUI[2]	9.38	7.51	1.87	19.94

Notes
1. Gross EUI is Energy Use Total (not including PV) / Total Building Area
2. Net EUI is Energy Use Total (including PV) / Total Building Area

REQUIRED PV SYSTEMS											
01	02	03	04	05	06	07	08	09	10	11	12
DC System Size (kWdc)	Exception	Module Type	Array Type	Power Electronics	CFI	Azimuth (deg)	Tilt Input	Array Angle (deg)	Tilt: (x in 12)	Inverter Eff. (%)	Annual Solar Access (%)
2.04	NA	Standard (14-17%)	Fixed	none	true	150-270	n/a	n/a	<=7:12	96	98

REQUIRED SPECIAL FEATURES
The following are features that must be installed as condition for meeting the modeled energy performance for this computer analysis.
• Insulation below roof deck
• Northwest Energy Efficiency Alliance (NEEA) rated heat pump water heater; specific brand/model, or equivalent, must be installed

HERS FEATURE SUMMARY
The following is a summary of the features that must be field-verified by a certified HERS Rater as a condition for meeting the modeled energy performance for this computer analysis. Additional detail is provided in the building tables below. Registered CF2Rs and CF3Rs are required to be completed in the HERS Registry
• Quality insulation installation (QII)
• Indoor air quality ventilation
• Minimum Airflow
• Verified SEER/SEER2
• Verified Refrigerant Charge
• Fan Efficacy Watts/CFM
• Verified HSPF
• Verified heat pump rated heating capacity
• Duct leakage testing

BUILDING - FEATURES INFORMATION						
01	02	03	04	05	06	07
Project Name	Conditioned Floor Area (ft^2)	Number of Dwelling Units	Number of Bedrooms	Number of Zones	Number of Ventilation Cooling Systems	Number of Water Heating Systems
2383 Mattos Drive - ADU	998.8	1	2	2	0	1

ZONE INFORMATION						
01	02	03	04	05	06	07
Zone Name	Zone Type	HVAC System Name	Zone Floor Area (ft^2)	Avg. Ceiling Height	Water Heating System 1	Status
1st Floor Zone	Conditioned	New HVAC1	672	8	DHW Sys 1	New
2nd Floor Zone	Conditioned	New HVAC1	326.8	8	DHW Sys 1	New

OPAQUE SURFACES							
01	02	03	04	05	06	07	08
Name	Zone	Construction	Azimuth	Orientation	Gross Area (ft^2)	Window and Door Area (ft2)	Tilt (deg)
Northwest Wall (New)	1st Floor Zone	R-15 + R-5 Wall	342	Left	297	15	90
Northeast Wall (New)	1st Floor Zone	R-15 + R-5 Wall	72	Back	189	0	90
Southeast Wall (New)	1st Floor Zone	R-15 + R-5 Wall	162	Right	297	61	90

OPAQUE SURFACES							
01	02	03	04	05	06	07	08
Name	Zone	Construction	Azimuth	Orientation	Gross Area (ft^2)	Window and Door Area (ft2)	Tilt (deg)
Southwest Wall (New)	1st Floor Zone	R-15 + R-5 Wall	252	Front	189	60	90
Northwest Wall (New) 2	2nd Floor Zone	R-15 + R-5 Wall	342	Left	144	7.5	90
Northeast Wall (New) 2	2nd Floor Zone	R-15 + R-5 Wall	72	Back	189	13.5	90
Southeast Wall (New) 2	2nd Floor Zone	R-15 + R-5 Wall	162	Right	144	13.5	90
Southwest Wall (New) 2	2nd Floor Zone	R-15 + R-5 Wall	252	Front	189	0	90
Roof 3	1st Floor Zone	R-30 Ceiling + R-15 Below	n/a	n/a	329.2	n/a	n/a
Roof 4	2nd Floor Zone	R-30 Ceiling + R-15 Below	n/a	n/a	310.8	n/a	n/a
Interior Surface	1st Floor Zone	Interior Ceiling	n/a	n/a	326.8	n/a	n/a
Interior Surface 2	2nd Floor Zone	Interior Floor	n/a	n/a	326.8	n/a	n/a

OPAQUE SURFACES - CATHEDRAL CEILINGS										
01	02	03	04	05	06	07	08	09	10	11
Name	Zone	Construction	Azimuth	Orientation	Area (ft^2)	Skylight Area (ft^2)	Roof Rise (x in 12)	Roof Reflectance	Roof Emittance	Cool Roof
Roof	1st Floor Zone	R-30 Ceiling + R-15 Below1	0	n/a	16.1	16	4	0.1	0.85	No
Roof 2	2nd Floor Zone	R-30 Ceiling + R-15 Below1	0	n/a	16.1	16	4	0.1	0.85	No

ATTIC							
01	02	03	04	05	06	07	08
Name	Construction	Type	Roof Rise (x in 12)	Roof Reflectance	Roof Emittance	Radiant Barrier	Cool Roof
Attic 1st Floor Zone	Attic Roof1st Floor Zone	Ventilated	4	0.1	0.85	No	No
Attic 2nd Floor Zone	Attic Roof2nd Floor Zone	Ventilated	4	0.1	0.85	No	No

FENESTRATION / GLAZING													
01	02	03	04	05	06	07	08	09	10	11	12	13	14
Name	Type	Surface	Orientation	Azimuth	Width (ft)	Height (ft)	Mult.	Area (ft^2)	U-factor	U-factor Source	SHGC	SHGC Source	Exterior Shading
Northwest Window (New)	Window	Northwest Wall (New)	Left	342			1	7.5	0.3	NFRC	0.23	NFRC	Bug Screen
Northwest Window (New) 2	Window	Northwest Wall (New)	Left	342			1	7.5	0.3	NFRC	0.23	NFRC	Bug Screen
Southeast Window (New)	Window	Southeast Wall (New)	Right	162			1	40	0.3	NFRC	0.23	NFRC	Bug Screen
Southeast Window (New) 2	Window	Southeast Wall (New)	Right	162			1	7.5	0.3	NFRC	0.23	NFRC	Bug Screen
Southeast Window (New) 3	Window	Southeast Wall (New)	Right	162			1	13.5	0.3	NFRC	0.23	NFRC	Bug Screen
Southwest Window (New)	Window	Southwest Wall (New)	Front	252			1	40	0.3	NFRC	0.23	NFRC	Bug Screen
Northwest Window (New) 3	Window	Northwest Wall (New) 2	Left	342			1	7.5	0.3	NFRC	0.23	NFRC	Bug Screen
Northeast Window (New)	Window	Northeast Wall (New) 2	Back	72			1	13.5	0.3	NFRC	0.23	NFRC	Bug Screen
Southeast Window (New) 4	Window	Southeast Wall (New) 2	Right	162			1	13.5	0.3	NFRC	0.23	NFRC	Bug Screen
Skylight (New)	Skylight	Roof		0			1	16	0.47	NFRC	0.25	NFRC	

FENESTRATION / GLAZING													
01	02	03	04	05	06	07	08	09	10	11	12	13	14
Name	Type	Surface	Orientation	Azimuth	Width (ft)	Height (ft)	Mult.	Area (ft^2)	U-factor	U-factor Source	SHGC	SHGC Source	Exterior Shading
Skylight (New) 2	Skylight	Roof 2		0			1	16	0.47	NFRC	0.25	NFRC	

OPAQUE DOORS			
01	02	03	04
Name	Side of Building	Area (ft^2)	U-factor
Solid Core Door	Southwest Wall (New)	20	0.2

SLAB FLOORS							
01	02	03	04	05	06	07	08
Name	Zone	Area (ft^2)	Perimeter (ft)	Edge Insul. R-value and Depth	Edge Insul. R-value and Depth	Carpeted Fraction	Heated
Slab-on-Grade	1st Floor Zone	672	0.1	none	0	80%	No

OPAQUE SURFACE CONSTRUCTIONS							
01	02	03	04	05	06	07	08
Construction Name	Surface Type	Construction Type	Framing	Total Cavity R-value	Interior / Exterior Continuous R-value	U-factor	Assembly layers
R-15 + R-5 Wall	Exterior Walls	Wood Framed Wall	2x4 @ 16 in. O. C.	R-15	None / 5	0.06	Inside Finish: Gypsum Board Cavity / Frame: R-15 / 2x4 Sheathing / Insulation: R-5 Sheathing Exterior Finish: 3 Coat Stucco

OPAQUE SURFACE CONSTRUCTIONS							
01	02	03	04	05	06	07	08
Construction Name	Surface Type	Construction Type	Framing	Total Cavity R-value	Interior / Exterior Continuous R-value	U-factor	Assembly layers
R-30 Ceiling + R-15 Below1	Cathedral Ceilings	Wood Framed Ceiling	2x4 @ 24 in. O. C.	R-30	15 / None	0.023	Roofing: Light Roof (Asphalt Shingle) Roof Deck: Wood Siding/sheathing/decking Cavity / Frame: R-30 / 2x4 Sheathing / Insulation: R-15 Sheathing Inside Finish: Gypsum Board
Attic Roof1st Floor Zone	Attic Roofs	Wood Framed Ceiling	2x4 @ 24 in. O. C.	R-15	None / 0	0.07	Roofing: Light Roof (Asphalt Shingle) Roof Deck: Wood Siding/sheathing/decking Cavity / Frame: R-13.0 / 2x4 Around Roof Joists: R-2.0 insul.
Attic Roof2nd Floor Zone	Attic Roofs	Wood Framed Ceiling	2x4 @ 24 in. O. C.	R-15	None / 0	0.07	Roofing: Light Roof (Asphalt Shingle) Roof Deck: Wood Siding/sheathing/decking Cavity / Frame: R-13.0 / 2x4 Around Roof Joists: R-2.0 insul.
R-30 Ceiling + R-15 Below	Ceilings (below attic)	Wood Framed Ceiling	2x4 @ 24 in. O. C.	R-30	None / None	0.032	Over Ceiling Joists: R-20.9 insul. Cavity / Frame: R-9.1 / 2x4 Inside Finish: Gypsum Board
Interior Floor	Interior Floors	Wood Framed Floor	2x12 @ 16 in. O. C.	R-0	None / None	0.196	Floor Surface: Carpeted Floor Deck: Wood Siding/sheathing/decking Cavity / Frame: no insul. / 2x12 Ceiling Below Finish: Gypsum Board
Interior Ceiling	Interior Ceiling	Wood Framed Ceiling	2x4 @ 24 in. O. C.	R-0	None / None	0.204	Floor Surface: Carpeted Floor Deck: Wood Siding/sheathing/decking Cavity / Frame: no insul. / 2x4 Ceiling Below Finish: Gypsum Board

DESIGN EVEREST
CONSULTING ENGINEERS
365 FLOWER LANE
MOUNTAIN VIEW, CA 94043
PHONE: (888) 311-3015 FAX: (650) 695-1801

2387 MATTOS DRIVE
ADU BUILDING PERMIT

REV	DATE	REMARKS
0	02.14.2023	BUILDING PERMIT
1	05.13.2023	REVISION 1
2	07.24.2023	REVISION 2
3	10.04.2023	REVISION 3

LICENSED ARCHITECT
NATHAN CONRAD
C36505
5-31-2025
STATE OF CALIFORNIA

SIGN DATE:
DATE:
SCALE:
DRAWN BY: Author
CKD BY: Checker
PROJECT#: 202212048

A0.4
T24 REPORT

BUILDING ENVELOPE - HERS VERIFICATION

01	02	03	04	05
Quality Insulation Installation (QII)	**High R-value Spray Foam Insulation**	**Building Envelope Air Leakage**	**CFM50**	**CFM50**
Required	Not Required	N/A	n/a	n/a

WATER HEATING SYSTEMS

01	02	03	04	05	06	07	08	09
Name	**System Type**	**Distribution Type**	**Water Heater Name**	**Number of Units**	**Solar Heating System**	**Compact Distribution**	**HERS Verification**	**Water Heater Name (#)**
DHW Sys 1	Domestic Hot Water (DHW)	Standard	DHW Heater 1	1	n/a	None	n/a	DHW Heater 1 (1)

WATER HEATERS - NEEA HEAT PUMP

01	02	03	04	05	06	07	08
Name	**# of Units**	**Tank Vol. (gal)**	**NEEA Heat Pump Brand**	**NEEA Heat Pump Model**	**Tank Location**	**Duct Inlet Air Source**	**Duct Outlet Air Source**
DHW Heater 1	1	50	Rheem	PROPH50 T2 RH37515 (50 gal, JA13)	TankZone	1st Floor Zone	1st Floor Zone

WATER HEATING - HERS VERIFICATION

01	02	03	04	05	06	07
Name	**Pipe Insulation**	**Parallel Piping**	**Compact Distribution**	**Compact Distribution Type**	**Recirculation Control**	**Shower Drain Water Heat Recovery**
DHW Sys 1 - 1/1	Not Required	Not Required	Not Required	None	Not Required	Not Required

SPACE CONDITIONING SYSTEMS

01	02	03	04	05	06	07	08	09
Name	**System Type**	**Heating Unit Name**	**Heating Equipment Count**	**Cooling Unit Name**	**Cooling Equipment Count**	**Fan Name**	**Distribution Name**	**Required Thermostat Type**
New HVAC1	Heat pump heating cooling	Heat Pump System 1	1	Heat Pump System 1	1	HVAC Fan 1	Air Distribution System 1	Setback

HVAC - HEAT PUMPS

01	02	03	04	05	06	07	08	09	10	11	12	13
			Heating				Cooling					
Name	**System Type**	**Number of Units**	**Efficiency Type**	**HSPF / HSPF2 / COP**	**Cap 47**	**Cap 17**	**Efficiency Type**	**SEER / SEER 2**	**EER / EER / CEER**	**Zonally Controlled**	**Compressor Type**	**HERS Verification**
Heat Pump System 1	Central split HP	1	HSPF	9.5	36000	24000	EERSEER	16	12	Not Zonal	Single Speed	Heat Pump System 1-hers-htpump

HVAC HEAT PUMPS - HERS VERIFICATION

01	02	03	04	05	06	07	08	09
Name	**Verified Airflow**	**Airflow Target**	**Verified EER/EER2**	**Verified SEER/SEER2**	**Verified Refrigerant Charge**	**Verified HSPF/HSPF2**	**Verified Heating Cap 47**	**Verified Heating Cap 17**
Heat Pump System 1-hers-htpump	Required	350	Not Required	Required	Yes	Yes	Yes	Yes

HVAC - DISTRIBUTION SYSTEMS

01	02	03	04	05	06	07	08	09	10	11	12
Name	**Type**	**Design Type**	**Duct Ins. R-value**		**Duct Location**		**Surface Area**		**Bypass Duct**	**Duct Leakage**	**HERS Verification**
			Supply	**Return**	**Supply**	**Return**	**Supply**	**Return**			
Air Distribution System 1	Unconditioned attic	Non-Verified	R-6	R-6	Attic	Attic	n/a	n/a	No Bypass Duct	Sealed and Tested	Air Distribution System 1-hers-dist

HVAC DISTRIBUTION - HERS VERIFICATION

01	02	03	04	05	06	07	08	09
Name	**Duct Leakage Verification**	**Duct Leakage Target (%)**	**Verified Duct Location**	**Verified Duct Design**	**Buried Ducts**	**Deeply Buried Ducts**	**Low-leakage Air Handler**	**Low Leakage Ducts Entirely in Conditioned Space**
Air Distribution System 1-hers-dist	Yes	5.0	Not Required	Not Required	Not Required	Credit not taken	Not Required	No

HVAC - FAN SYSTEMS

01	02	03	04
Name	**Type**	**Fan Power (Watts/CFM)**	**Name**
HVAC Fan 1	HVAC Fan	0.45	HVAC Fan 1-hers-fan

HVAC FAN SYSTEMS - HERS VERIFICATION

01	02	03
Name	**Verified Fan Watt Draw**	**Required Fan Efficacy (Watts/CFM)**
HVAC Fan 1-hers-fan	Required	0.45

INDOOR AIR QUIALITY (IAQ) FANS

01	02	03	04	05	06	07	08	09
Dwelling Unit	**Airflow (CFM)**	**Fan Efficacy (W/CFM)**	**IAQ Fan Type**	**Includes Heat/Energy Recovery?**	**IAQ Recovery Effectiveness - SRE**	**Includes Fault Indicator Display?**	**HERS Verification**	**Status**
SFam IAQVentRpt	51	0.35	Exhaust	No	n/a / n/a	No	Yes	

DOCUMENTATION AUTHOR'S DECLARATION STATEMENT

1. I certify that this Certificate of Compliance documentation is accurate and complete.

Documentation Author Name: Raffi Dar	Documentation Author Signature: Raffi Dar
Company: Precise Green Consulting Inc.	Signature Date: 10/02/2023
Address: 3633 Urquidez Ave	CEA/ HERS Certification Identification (if applicable):
City/State/Zip: Glendale, CA 91208	Phone: 818-291-3919

RESPONSIBLE PERSON'S DECLARATION STATEMENT

I certify the following under penalty of perjury, under the laws of the State of California:
1. I am eligible under Division 3 of the Business and Professions Code to accept responsibility for the building design identified on this Certificate of Compliance.
2. I certify that the energy features and performance specifications identified on this Certificate of Compliance conform to the requirements of Title 24, Part 1 and Part 6 of the California Code of Regulations.
3. The building design features or system design features identified on this Certificate of Compliance are consistent with the information provided on other applicable compliance documents, worksheets, calculations, plans and specifications submitted to the enforcement agency for approval with this building permit application.

Responsible Designer Name: Nathan Conrad	Responsible Designer Signature: Nathan Conrad
Company: T+C Architecture and Interior Design	Date Signed: 10/04/2023
Address: 243 Ashley Cir	License:
City/State/Zip: Danville, CA 94526	Phone: 9252120993

Digitally signed by California Home Energy Efficiency Rating Services (CHEERS). This digital signature is provided in order to secure the content of this registered document, and in no way implies Registration Provider responsibility for the accuracy of the information.

DESIGN EVEREST
CONSULTING ENGINEERS
365 FLOWER LANE
MOUNTAIN VIEW, CA 94043
PHONE: (888) 311-3015 FAX: (650) 695-1801

2387 MATTOS DRIVE
ADU BUILDING PERMIT

REV	DATE	REMARKS
0	02.14.2023	BUILDING PERMIT
1	05.13.2023	REVISION 1
2	07.24.2023	REVISION 2
3	10.04.2023	REVISION 3

LICENSED ARCHITECT
NATHAN CONRAD
C36505
5-31-2025
STATE OF CALIFORNIA

SIGN DATE:
DATE:
SCALE:
DRAWN BY: Author
CKD BY: Checker
PROJECT#: 202212048

A0.5
T24 REPORT

RESIDENTIAL MEASURES SUMMARY

RMS-1

Project Name	Building Type		Date
2383 Mattos Drive - ADU	☑ Single Family ☐ Multi Family ☐ Addition Alone ☐ Existing+ Addition/Alteration		7/21/2023
Project Address	**California Energy Climate Zone**	**Total Cond. Floor Area**	**Addition**	**# of Units**
2383 Mattos Drive Milpitas	CA Climate Zone 04	999	n/a	1

INSULATION

Construction	Type	Cavity	Area (ft^2)	Special Features	Status
Wall	Wood Framed	R 15	1,468	Add=R-5.0	New
Door	Opaque Door	R-5	20		New
Slab	Unheated Slab-on-Grade	- no insulation	672	Perim = 0'	New
Roof	Wood Framed Attic	R 30	640	Add=R-15.0	New
Demising	Wood Framed Attic	- no insulation	327		New
Demising	Wood Framed w/o Crawl Space	- no insulation	327		New

FENESTRATION

Total Area: 183 Glazing Percentage: 18.3% New/Altered Average U-Factor: 0.33

Orientation	Area(ft^2)	U-Fac	SHGC	Overhang	Sidefins	Exterior Shades	Status
Left (NW)	22.5	0.300	0.23	none	none	N/A	New
Right (SE)	74.5	0.300	0.23	none	none	N/A	New
Front (SW)	40.0	0.300	0.23	none	none	N/A	New
Skylight	32.0	0.470	0.25	none	none	N/A	New
Rear (NE)	13.5	0.300	0.23	none	none	N/A	New

HVAC SYSTEMS

Qty.	Heating	Min. Eff	Cooling	Min. Eff	Thermostat	Status
1	Electric Heat Pump	9.50 HSPF	Split Heat Pump	16.0 SEER	Setback	New

HVAC DISTRIBUTION

Location	Heating	Cooling	Duct Location	Duct R-Value	Status
New HVAC	Ducted	Ducted	Attic	6.0	New

WATER HEATING

Qty.	Type	Gallons	Min. Eff	Distribution	Status
1	Heat Pump	50	3.50	Standard	New

2022 Single-Family Residential Mandatory Requirements Summary

NOTE: Single-family residential buildings subject to the Energy Codes must comply with all applicable mandatory measures, regardless of the compliance approach used. Review the respective section for more information.
(04/2022)

Building Envelope:

§ 110.6(a)1:	**Air Leakage.** Manufactured fenestration, exterior doors, and exterior pet doors must limit air leakage to 0.3 CFM per square foot or less when tested per NFRC-400, ASTM E283, or AAMA/WDMA/CSA 101/I.S.2/A440-2011. *
§ 110.6(a)5:	**Labeling.** Fenestration products and exterior doors must have a label meeting the requirements of § 10-111(a).
§ 110.6(b):	**Field fabricated exterior doors and fenestration** products must use U-factors and solar heat gain coefficient (SHGC) values from Tables 110.6-A, 110.6-B, or JA4.5 for exterior doors. They must be caulked and/or weather stripped.
§ 110.7:	**Air Leakage.** All joints, penetrations, and other openings in the building envelope that are potential sources of air leakage must be caulked, gasketed, or weather stripped.
§ 110.8(a):	**Insulation Certification by Manufacturers.** Insulation must be certified by the Department of Consumer Affairs, Bureau of Household Goods and Services (BHGS).
§ 110.8(g):	**Insulation Requirements for Heated Slab Floors.** Heated slab floors must be insulated per the requirements of § 110.8(g).
§ 110.8(i):	**Roofing Products Solar Reflectance and Thermal Emittance.** The thermal emittance and aged solar reflectance values of the roofing material must meet the requirements of § 110.8(i) and be labeled per § 10-113 when the installation of a cool roof is specified on the CF1R.
§ 110.8(j):	**Radiant Barrier.** When required, radiant barriers must have an emittance of 0.05 or less and be certified to the Department of Consumer Affairs.
§ 150.0(a):	**Roof Deck, Ceiling and Rafter Roof Insulation.** Roof decks in newly constructed attics in climate zones 4 and 8-16 area-weighted average U-factor not exceeding U0.184. Ceiling and rafter roofs minimum R-22 insulation in wood-frame ceiling, or area-weighted average U-factor must not exceed 0.043. Rafter roof alterations minimum R-19 or area-weighted average U-factor of 0.054 or less. Attic access doors must have permanently attached insulation using adhesive or mechanical fasteners. The attic access must be gasketed to prevent air leakage. Insulation must be installed in direct contact with a roof or ceiling which is sealed to limit infiltration and exfiltration, as specified in § 110.7, including but not limited to placing insulation either above or below the roof deck or on top of a drywall ceiling. *
§ 150.0(b):	**Loose-fill Insulation.** Loose fill insulation must meet the manufacturer's required density for the labeled R-value.
§ 150.0(c):	**Wall Insulation.** Minimum R-13 insulation in 2x4 inch wood framing wall or have a U-factor of 0.102 or less, or R-20 in 2x6 inch wood framing or have a U-factor of 0.071 or less. Opaque non-framed assemblies must have an overall assembly U-factor not exceeding 0.102. Masonry walls must meet Tables 150.1-A or B. *
§ 150.0(d):	**Raised-floor Insulation.** Minimum R-19 insulation in raised wood framed floor or 0.037 maximum U-factor. *
§ 150.0(f):	**Slab Edge Insulation.** Slab edge insulation must meet all of the following: have a water absorption rate, for the insulation material alone without facings, no greater than 0.3 percent; have a water vapor permeance no greater than 2.0 perm per inch; be protected from physical damage and UV light deterioration; and, when installed as part of a heated slab floor, meet the requirements of § 110.8(g).
§ 150.0(g)1:	**Vapor Retarder.** In climate zones 1 through 16, the earth floor of unvented crawl space must be covered with a Class I or Class II vapor retarder. This requirement also applies to controlled ventilation crawl space for buildings complying with the exception to § 150.0(d).
§ 150.0(g)2:	**Vapor Retarder.** In climate zones 14 and 16, a Class I or Class II vapor retarder must be installed on the conditioned space side of all insulation in all exterior walls, vented attics, and unvented attics with air-permeable insulation.
§ 150.0(j):	**Fenestration Products.** Fenestration, including skylights, separating conditioned space from unconditioned space or outdoors must have a maximum U-factor of 0.40, or area-weighted average U-factor of all fenestration must not exceed 0.45. *

Fireplaces, Decorative Gas Appliances, and Gas Log:

§ 110.5(a):	**Pilot Light.** Continuously burning pilot lights are not allowed for indoor and outdoor fireplaces.
§ 150.0(e)1:	**Closable Doors.** Masonry or factory-built fireplaces must have a closable metal or glass door covering the entire opening of the firebox.
§ 150.0(e)2:	**Combustion Intake.** Masonry or factory-built fireplaces must have a combustion outside air intake, which is at least six square inches in area and is equipped with a readily accessible, operable, and tight-fitting damper or combustion-air control device.
§ 150.0(e)3:	**Flue Damper.** Masonry or factory-built fireplaces must have a flue damper with a readily accessible control. *

Space Conditioning, Water Heating, and Plumbing System:

§ 110.0-§ 110.3:	**Certification.** Heating, ventilation, and air conditioning (HVAC) equipment, water heaters, showerheads, faucets, and all other regulated appliances must be certified by the manufacturer to the California Energy Commission.
§ 110.2(a):	**HVAC Efficiency.** Equipment must meet the applicable efficiency requirements in Table 110.2-A through Table 110.2-N. *
§ 110.2(b):	**Controls for Heat Pumps with Supplementary Electric Resistance Heaters.** Heat pumps with supplementary electric resistance heaters must have controls that prevent supplementary heater operation when the heating load can be met by the heat pump alone; and in which the cut-on temperature for compression heating is higher than the cut-on temperature for supplementary heating, and the cut-off temperature for compression heating is higher than the cut-off temperature for supplementary heating.
§ 110.2(c):	**Thermostats.** All heating or cooling systems not controlled by a central energy management control system (EMCS) must have a setback thermostat. *
§ 110.3(c)3:	**Insulation.** Unfired service water heater storage tanks and solar water-heating backup tanks must have adequate insulation, or tank surface heat loss rating.
§ 110.3(c)6:	**Isolation Valves.** Instantaneous water heaters with an input rating greater than 6.8 kBtu per hour (2 kW) must have isolation valves with hose bibbs or other fittings on both cold and hot water lines to allow for flushing the water heater when the valves are closed.

5/6/22

2022 Single-Family Residential Mandatory Requirements Summary

§ 110.5:	**Pilot Lights.** Continuously burning pilot lights are prohibited for natural gas: fan-type central furnaces; household cooking appliances (except appliances without an electrical supply voltage connection with pilot lights that consume less than 150 Btu per hour), and pool and spa heaters. *
§ 150.0(h)1:	**Building Cooling and Heating Loads.** Heating and/or cooling loads are calculated in accordance with the ASHRAE Handbook, Equipment Volume; Applications Volume, and Fundamentals Volume; the SMACNA Residential Comfort System Installation Standards Manual; or the ACCA Manual J using design conditions specified in § 150.0(h)2.
§ 150.0(h)3A:	**Clearances.** Air conditioner and heat pump outdoor condensing units must have a clearance of at least five feet from the outlet of any dryer.
§ 150.0(h)3B:	**Liquid Line Drier.** Air conditioners and heat pump systems must be equipped with liquid line filter driers if required, as specified by the manufacturer's instructions.
§ 150.0(j)1:	**Water Piping, Solar Water-heating System Piping, and Space Conditioning System Line Insulation.** All domestic hot water piping must be insulated as specified in § 609.11 of the California Plumbing Code. *
§ 150.0(j)2:	**Insulation Protection.** Piping insulation must be protected from damage, including that due to sunlight, moisture, equipment maintenance, and wind as required by §120.3(b). Insulation exposed to weather must be water retardant and protected from UV light (no adhesive tapes). Insulation covering chilled water piping and refrigerant suction piping located outside the conditioned space must include, or be protected by, a Class I or Class II vapor retarder. Pipe insulation buried below grade must be installed in a waterproof and non-crushable casing or sleeve.
§ 150.0(n)1:	**Gas or Propane Water Heating Systems.** Systems using gas or propane water heaters to serve individual dwelling units must designate a space at least 2.5' x 2.5' x 7' suitable for the future installation of a heat pump water heater, and meet electrical and plumbing requirements, based on the distance between this designated space and the water heater location, and a condensate drain no more than 2' higher than the base of the water heater.
§ 150.0(n)3:	**Solar Water-heating Systems.** Solar water-heating systems and collectors must be certified and rated by the Solar Rating and Certification Corporation (SRCC), the International Association of Plumbing and Mechanical Officials; Research and Testing (IAPMO R&T), or by a listing agency that is approved by the executive director.

Ducts and Fans:

§ 110.8(d)3:	**Ducts.** Insulation installed on an existing space-conditioning duct must comply with § 604.0 of the California Mechanical Code (CMC). If a contractor installs the insulation, the contractor must certify to the customer, in writing, that the insulation meets this requirement.
§ 150.0(m)1:	**CMC Compliance.** All air-distribution system ducts and plenums must meet CMC§§ 601.0-605.0 and ANSI/SMACNA-006-2006 HVAC Duct Construction Standards Metal and Flexible 3rd Edition. Portions of supply-air and return air ducts and plenums must be insulated to R-6.0 or higher; ducts located entirely in conditioned space as confirmed through field verification and diagnostic testing (RA3.1.4.3.9) do not require insulation. Connections of metal ducts and inner core of flexible ducts must be mechanically fastened. Openings must be sealed with mastic, tape, or other duct-closure system that meets the applicable UL requirements, or aerosol sealant that meets UL 723. The combination of mastic and either mesh or tape must be used to seal openings greater than ¼". If mastic or tape is used. Building cavities, air handler support platforms, and plenums designed or constructed with materials other than sealed sheet metal, duct board or flexible duct must not be used to convey conditioned air. Building cavities and support platforms may contain ducts; ducts installed in these spaces must not be compressed. *
§ 150.0(m)2:	**Factory-Fabricated Duct Systems.** Factory-fabricated duct systems must comply with applicable requirements for duct construction, connections, and closures; joints and seams of duct systems and their components must not be sealed with cloth back rubber adhesive duct tapes unless such tape is used in combination with mastic and draw bands.
§ 150.0(m)3:	**Field-Fabricated Duct Systems.** Field-fabricated duct systems must comply with applicable requirements for: pressure-sensitive tapes, mastics, sealants, and other requirements specified for duct construction.
§ 150.0(m)7:	**Backdraft Damper.** Fan systems that exchange air between the conditioned space and outdoors must have backdraft or automatic dampers.
§ 150.0(m)8:	**Gravity Ventilation Dampers.** Gravity ventilating systems serving conditioned space must have either automatic or readily accessible, manually operated dampers in all openings to the outside, except combustion inlet and outlet air openings and elevator shaft vents.
§ 150.0(m)9:	**Protection of Insulation.** Insulation must be protected from damage due tosunlight, moisture, equipment maintenance, and wind. Insulation exposed to weather must be suitable for outdoor service (e.g., protected by aluminum, sheet metal, painted canvas, or plastic cover). Cellular foam insulation must be protected as above or painted with a water retardant and solar radiation-resistant coating.
§ 150.0(m)10:	**Porous Inner Core Flex Duct.** Porous inner cores of flex ducts must have a non-porous layer or air barrier between the inner core and outer vapor barrier.
§ 150.0(m)11:	**Duct System Sealing and Leakage Test.** When space conditioning systems use forced air duct systems to supply conditioned air to an occupiable space, the ducts must be sealed and duct leakage tested, as confirmed through field verification and diagnostic testing, in accordance with Reference Residential Appendix RA3.1.
§ 150.0(m)12:	**Air Filtration.** Space conditioning systems with ducts exceeding 10 feet and the supply side of ventilation systems must have MERV 13 or equivalent filters. Filters for space conditioning systems must have a two inch depth or can be one inch if sized per Equation 150.0-A. Clean-filter pressure drop and labeling must meet the requirements in § 150.0(m)12. Filters must be accessible for regular service. Filter racks or grilles must use gaskets, sealing, or other means to close gaps around the inserted filters to and prevents air from bypassing the filter. *

5/6/22

2022 Single-Family Residential Mandatory Requirements Summary

§ 150.0(m)13:	**Space Conditioning System Airflow Rate and Fan Efficacy.** Space conditioning systems that use ducts to supply cooling must have a hole for the placement of a static pressure probe, or a permanently installed static pressure probe in the supply plenum. Airflow must be ≥ 350 CFM per ton of nominal cooling capacity, and an air-handling unit fan efficacy ≤ 0.45 watts per CFM for gas furnace air handlers and ≤ 0.58 watts per CFM for all others. Small duct high velocity systems must provide an airflow ≥ 250 CFM per ton of nominal cooling capacity, and an air-handling unit fan efficacy ≤ 0.62 watts per CFM. Field verification testing is required in accordance with Reference Residential Appendix RA3.3. *

Ventilation and Indoor Air Quality:

§ 150.0(o)1:	**Requirements for Ventilation and Indoor Air Quality.** All dwelling units must meet the requirements of ASHRAE Standard 62.2, Ventilation and Acceptable Indoor Air Quality in Residential Buildings subject to the amendments specified in § 150.0(o)1. *
§ 150.0(o)1B:	**Central Fan Integrated (CFI) Ventilation Systems.** Continuous operation of CFI air handlers is not allowed to provide the whole-dwelling unit ventilation airflow required per § 150.0(o)1C. A motorized damper(s) must be installed on the ventilation duct(s) that prevents all airflow through the space conditioning duct system when the damper(s) is closed andcontrolled per § 150.0(o) 1Biii&iv. CFI ventilation systems must have controls that track outdoor air ventilation run time, and either open or close the motorized damper(s) for compliance with § 150.0(o) 1C.
§ 150.0(o)1C:	**Whole-Dwelling Unit Mechanical Ventilation for Single-Family Detached and townhouses.** Single-family detached dwelling units, and attached dwelling units not sharing ceilings or floors with other dwelling units, occupiable spaces, public garages, or commercial spaces must have mechanical ventilation airflow specified in § 150.0(o) 1Ci-iii
§ 150.0(o)1G:	**Local Mechanical Exhaust.** Kitchens and bathrooms must have local mechanical exhaust; nonenclosed kitchens must have demand-controlled exhaust system meeting requirements of § 150.0(o) 1Gii; enclosed kitchens and bathrooms can use demand-controlled or continuous exhaust meeting § 150.0(o) 1Giii-iv. Airflow must be measured by the installer per § 150.0 (o) 1Gv; and rated for sound per § 150.0(o) 1Gvi. *
§ 150.0(o)1H-8I:	**Airflow Measurement and Sound Ratings of Whole-Dwelling Unit Ventilation Systems.** The airflow required per § 150.0(o) 1C must be measured by using a flow hood, flow grid, or other airflow measuring device at the fan's inlet or outlet terminalsfitting per Reference Residential Appendix RA3.7. Whole-Dwelling unit ventilation systems must be rated for sound per ASHRAE 62.2 §7.2 at no less than the minimum airflow rate required by § 150.0(o) 1C.
§ 150.0(o)2:	**Field Verification and Diagnostic Testing.** Whole-Dwelling Unit ventilation airflow, vented range hood airflow and sound rating, and HRV and ERV fan efficacy must be verified in accordance with Reference Residential Appendix RA3.7. Vented range hoods must be verified per Reference Residential Appendix RA3.7.4.3 to confirm if it is rated by HVI or AHAM to comply with the airflow rates and sound requirements per § 150.0(o) 1G

Pool and Spa Systems and Equipment:

§ 110.4(a):	**Certification by Manufacturers.** Any pool or spa heating system or equipment must be certified to have all of the following: compliance with the Appliance Efficiency Regulations and listing in MAEDbS; an on-off switch mounted outside of the heater that allows shutting off the heater without adjusting the thermostat setting; a permanent weatherproof plate or card with operating instructions; and must not use electric resistance heating. *
§ 110.4(b)1:	**Piping.** Any pool or spa heating system or equipment must be installed with at least 36 inches of pipe between the filter and the heater, or dedicated suction and return lines, or built-in or built-up connections to allow for future solar heating.
§ 110.4(b)2:	**Covers.** Outdoor pools or spas that have a heat pump or gas heater must have a cover.
§ 110.4(b)3:	**Directional Inlets and Time Switches for Pools.** Pools must have directional inlets that adequately mix the pool water, and a time switch that will allow all pumps to be set or programmed to run only during off-peak electric demand periods.
§ 110.5:	**Pilot Light.** Natural gas pool and spa heaters must not have a continuously burning pilot light.
§ 150.0(p):	**Pool Systems and Equipment Installation.** Residential pool systems or equipment must meet the specified requirements for pump sizing, flow rate, piping, filters, and valves. *

Lighting:

§ 110.9:	**Lighting Controls and Components.** All lighting control devices and systems, ballasts, and luminaires must meet the applicable requirements of § 110.9. *
§ 150.0(k)1A:	**Luminaire Efficacy.** All installed luminaires must meet the requirements in Table 150.0-A, except lighting integral to exhaust fans, kitchen range hoods, bath vanity mirrors, and garage door openers; navigation lighting less than 5 watts; and lighting internal to drawers, cabinets, and linen closets with an efficacy of at least 45 lumens per watt.
§ 150.0(k)1B:	**Screw based luminaires.** Screw based luminaires must contain lamps that comply with Reference Joint Appendix JA8. *
§ 150.0(k)1C:	**Recessed Downlight Luminaires in Ceilings.** Luminaires recessed into ceilings must not contain screw based sockets, must be airtight, and must be sealed with a gasket or caulk. California Electrical Code § 410.116 must also be met.
§ 150.0(k)1D:	**Light Sources in Enclosed or Recessed Luminaires.** Lamps and other separable light sources that are not compliant with the JA8 elevated temperature requirements, including marking requirements, must not be installed in enclosed or recessed luminaires.
§ 150.0(k)1E:	**Blank Electrical Boxes.** The number of electrical boxes that are more than five feet above the finished floor and do not contain a luminaire or other device shall be no more than the number of bedrooms. These boxes must be served by a dimmer, vacancy sensor control, low voltage wiring, or fan speed control.
§ 150.0(k)1F:	**Lighting Integral to Exhaust Fans.** Lighting integral to exhaust fans (except when installed by the manufacturer in kitchen exhaust hoods) must meet the applicable requirements of § 150.0(k). *

5/6/22

2022 Single-Family Residential Mandatory Requirements Summary

§ 150.0(k)1G:	**Screw based luminaires.** Screw based luminaires must contain lamps that comply with Reference Joint Appendix JA8. *
§ 150.0(k)1H:	**Light Sources in Enclosed or Recessed Luminaires.** Lamps and other separable light sources that are not compliant with the JA8 elevated temperature requirements, including marking requirements, must not be installed in enclosed or recessed luminaires.
§ 150.0(k)1I:	**Light Sources in Drawers, Cabinets, and Linen Closets.** Light sources internal to drawers, cabinetry or linen closets are not required to comply with Table 150.0-A or be controlled by vacancy sensors provided that they are rated to consume no more than 5 watts of power, emit no more than 150 lumens, and are equipped with controls that automatically turn the lighting off when the drawer, cabinet or linen closet is closed.
§ 150.0(k)2A:	**Interior Switches and Controls.** All forward phase cut dimmers used with LED light sources must comply with NEMA SSL 7A.
§ 150.0(k)2B:	**Interior Switches and Controls.** Exhaust fans must be controlled separately from lighting systems. *
§ 150.0(k)2A:	**Accessible Controls.** Lighting must have readily accessible wall-mounted controls that allow the lighting to be manually turned on and off. *
§ 150.0(k)2B:	**Multiple Controls.** Controls must not bypass a dimmer, occupant sensor, or vacancy sensor function if the dimmer or sensor is installed to comply with § 150.0(k).
§ 150.0(k)2C:	**Mandatory Requirements.** Lighting controls must comply with the applicable requirements of § 110.9.
§ 150.0(k)2D:	**Energy Management Control Systems.** An energy management control system (EMCS) may be used to comply with dimming, occupancy, and control requirements if it provides the functionality of the specified control per § 110.9 and the physical controls specified in § 150.0(k)2A.
§ 150.0(k)2E:	**Automatic Shutoff Controls.** In bathrooms, garages, laundry rooms, utility rooms and walk-in closets, at least one installed luminaire must be controlled by an occupancy or vacancy sensor providing automatic-off functionality. Lighting inside drawers and cabinets with opaque fronts or doors must have controls that turn the light off when the drawer or door is closed.
§ 150.0(k)2F:	**Dimmers.** Lighting in habitable spaces (e.g., living rooms, dining rooms, kitchens, and bedrooms) must have readily accessible wall-mounted dimming controls that allow the lighting to be manually adjusted up and down. Forward phase cut dimmers controlling LED light sources in these spaces must comply with NEMA SSL 7A.
§ 150.0(k)2K:	**Independent controls.** Integrated lighting of exhaust fans shall be controlled independently from the fans. Lighting under cabinets or shelves, lighting in display cabinets, and switched outlets must be controlled separately from ceiling-installed lighting.
§ 150.0(k)3A:	**Residential Outdoor Lighting.** For single-family residential buildings, outdoor lighting permanently mounted to a residential building, or to other buildings on the same lot, must have a manual onloff switch and either a photocell and motion sensor or automatic time switch control) or an astronomical time clock. An energy management control system that provides the specified control functionality and meets all applicable requirements may be used to meet these requirements.
§ 150.0(k)4:	**Internally illuminated address signs.** Internally illuminated address signs must either comply with § 140.8 or consume no more than 5 watts of power.
§ 150.0(k)5:	**Residential Garages for Eight or More Vehicles.** Lighting for residential parking garages for eight or more vehicles must comply with the applicable requirements for nonresidential garages in §§ 110.9, 130.0, 130.1, 130.4, 140.6, and 141.0.

Solar Readiness:

§ 110.10(a)1:	**Single-family Residences.** Single-family residences located in subdivisions with 10 or more single-family residences and where the application for a tentative subdivision map for the residences has been deemed complete and approved by the enforcement agency, which do not have a photovoltaic system installed, must comply with the requirements of § 110.10(b)-(e).
§110.10(b) 1A:	**Minimum Solar Zone Area.** The solar zone must have a minimum total area as described below. The solar zone must comply with access, pathway, smoke ventilation, and spacing requirements as specified in Title 24, Part 9 or other parts of Title 24 or in any requirements adopted by a local jurisdiction. The solar zone total area must be comprised of areas that have no dimension less than 5 feet and are no less than 80 square feet each for buildings with roof areas less than or equal to 10,000 square feet or no less than 160 square feet each for buildings with roof areas greater than 10,000 square feet. For single-family residences, the solar zone must be located on the roof or overhang of the building and have a total area no less than 250 square feet. *
§ 110.10(b)2:	**Azimuth.** All sections of the solar zone located on steep-sloped roofs must have an azimuth between 90-300° of true north.
§ 110.10(b)3A:	**Shading.** The solar zone must not contain any obstructions, including but not limited to: vents, chimneys, architectural features, and roof mounted equipment.
§ 110.10(b)3B:	**Shading.** Any obstruction located on the roof or any other part of the building that projects above a solar zone must be located at least twice the horizontal distance of the height difference between the highest point of the obstruction and the horizontal projection of the nearest point of the solar zone, measured in the vertical plane. *
§ 110.10(b)4:	**Structural Design Loads on Construction Documents.** For areas of the roof designated as a solar zone, the structural design loads for roof dead load and roof live load must be clearly indicated on the construction documents.
§ 110.10(c):	**Interconnection Pathways.** The construction documents must indicate: a location reserved for inverters and metering equipment and a pathway reserved for routing of conduit from the solar zone to the point of interconnection with the electrical service; and for single-family residences and central water-heating systems, a pathway reserved for routing plumbing from the solar zone to the water-heating system.
§ 110.10(d):	**Documentation.** A copy of the construction documents or a comparable document indicating the information from § 110.10(b)-(c) must be provided to the occupant.
§ 110.10(e)1:	**Main Electrical Service Panel.** The main electrical service panel must have a minimum busbar rating of 200 amps.
§ 110.10(e)2:	**Main Electrical Service Panel.** The main electrical service panel must have a reserved space to allow for the installation of a double pole circuit breaker for a future solar electric installation. The reserved space must be permanently marked as "For Future Solar Electric."

Electric and Energy Storage Ready:

5/6/22

2022 Single-Family Residential Mandatory Requirements Summary

§ 150.0(s):	**Energy Storage System (ESS) Ready.** All single-family residences must meet all of the following: Either ESS-ready interconnection equipment with backed up capacity of 60 amps or more and four or more ESS supplied branch circuits; or a dedicated race way from the main service to a subpanel that supplies the branch circuits in § 150.0(s); at least four branch circuits must be identified and have their source collocated at a single panelboard suitable to be supplied by the ESS; with one circuit supplying the refrigerator, one lighting circuit near the primary exit, and one circuit supplying a sleeping room receptacle outlet; main panelboard must have a minimum busbar rating of 225 amps; sufficient space must be reserved to allow future installation of a system isolation equipment/transfer switch within 3' of the main panelboard, with raceways installed between the panelboard and the switch location to allow the connection of backup power source.
§ 150.0(t):	**Heat Pump Space Heater Ready.** Systems using gas or propane furnaces to serve individual dwelling units must include: A dedicated unobstructed 240V branch circuit wiring installed within 3' of the furnace with circuit conductors rated at least 30 amps with the blank cover identified as "240V ready;" and a reserved main electrical service panel space to allow for the installation of a double pole circuit breaker permanently marked as "For Future 240V use."
§ 150.0(u):	**Electric Cooktop Ready.** Systems using gas or propane cooktop to serve individual dwelling units must include: A dedicated unobstructed 240V branch circuit wiring installed within 3' of the cooktop with circuit conductors rated at least 50 amps with the blank cover identified as "240V ready;" and a reserved main electrical service panel space to allow for the installation of a double pole circuit breaker permanently marked as "For Future 240V use."
§ 150.0(v):	**Electric Clothes Dryer Ready.** Clothes dryer locations with gas or propane plumbing to serve individual dwelling units must include: A dedicated unobstructed 240V branch circuit wiring installed within 3' of the dryer location with circuit conductors rated at least 30 amps with the blank cover identified as "240V ready;" and a reserved main electrical service panel space to allow for the installation of a double pole circuit breaker permanently marked as "For Future 240V use."

*Exceptions may apply.

5/6/22

HVAC SYSTEM HEATING AND COOLING LOADS SUMMARY

Project Name		Date
2383 Mattos Drive - ADU		7/21/2023
System Name		Floor Area
New HVAC		999

ENGINEERING CHECKS

Number of Systems	1
Heating System	
Output per System	36,000
Total Output (Btuh)	36,000
Output (Btuh/sqft)	36.0
Cooling System	
Output per System	36,000
Total Output (Btuh)	36,000
Total Output (Tons)	3.0
Total Output (Btuh/sqft)	36.0
Total Output (sqft/Ton)	332.9
Air System	
CFM per System	0
Airflow (cfm)	0
Airflow (cfm/sqft)	0.00
Airflow (cfm/Ton)	0.0
Outside Air (%)	0.0%
Outside Air (cfm/sqft)	0.00

SYSTEM LOAD

	COIL COOLING PEAK			COIL HTG. PEAK	
	CFM	Sensible	Latent	CFM	Sensible
Total Room Loads	470	9,787	274	301	11,670
Return Vented Lighting		0			
Return Air Ducts		330			496
Return Fan		0			0
Ventilation	0	0	0	0	0
Supply Fan		0			0
Supply Air Ducts		330			496
TOTAL SYSTEM LOAD		10,446	274		12,663

HVAC EQUIPMENT SELECTION

Heat Pump HVAC	31,495	2,250	23,725
Total Adjusted System Output (Adjusted for Peak Design conditions)	31,495	2,250	23,725

Note: values above given at ARI conditions	TIME OF SYSTEM PEAK	Aug 3 PM	Jan 1 AM

HEATING SYSTEM PSYCHROMETRICS (Airstream Temperatures at Time of Heating Peak)

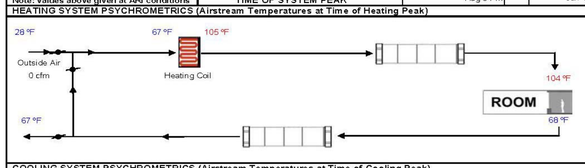

COOLING SYSTEM PSYCHROMETRICS (Airstream Temperatures at Time of Cooling Peak)

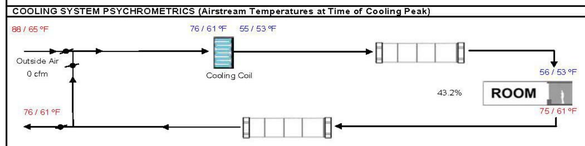

DESIGN EVEREST
CONSULTING ENGINEERS
365 FLOWER LANE
MOUNTAIN VIEW, CA 94043
PHONE: (888) 311-3015 FAX: (650) 695-1801

2387 MATTOS DRIVE
ADU BUILDING PERMIT

REV	DATE	REMARKS
0	02.14.2023	BUILDING PERMIT
1	05.13.2023	REVISION 1
2	07.24.2023	REVISION 2
3	10.04.2023	REVISION 3

LICENSED ARCHITECT
NATHAN CONRAD
C36505
5-31-2025
STATE OF CALIFORNIA

SIGN DATE:
DATE:
SCALE:
DRAWN BY: Author
CKD BY: Checker
PROJECT#: 202212048

A0.6

RESIDENTIAL MEASURES SUMMARY

SITE PLAN SHEET NOTES

35 GRADING TO MOVE SURAFACE WATER AWAY FROM BUILDING AND ADJACENT PROPERTIES AND TOWARD PUBLIC RIGHT OF WAY

36 WHERE LOT LINES PROHIBIT 6" OF FALL THEN DRAIN OR SWALES SHALL BE CONSTRUCTED.

37 IMPERVIOUS SURFACES WITHIN 10 FEET OF THE FOUNDATION SHALL BE SLOPED NOT LESS THAN 2% AWAY FROM THE BUILDING PER CRC R401.3.

38 ADDRESS NUMBERS FOR BOTH MAIN HOUSE AS WELL AS ADU SHALL BE ILLUMINATED (EXTERNAL OR INTERNAL) AND PLACED AT THE FRONT OF THE STRUCTURE FACING THE STREET, AS PER FIRE CODE.

39 ADDRESS NUMBERS SHALL BE MINIMUM 4"HIGH WITH 1/2" STROKE.

40 THE ICC REPORT FOR THE NEW SKYLIGHTS SHALL BE VERIFIED IN THE FIELD FOR INSPECTION.

41 EXISTING 200 AMP MAIN ELECTRICAL SERVICE PANEL LOCATION

42 EXISTING TRANSFORMER LOCATION

43 UNDERGROUND ELECTRICAL SERVICE

44 EXISTING 4" ABS SEWER LATERAL

45 PROPOSED SEWER CONNECTION TO EXISTING MAIN

46 EXISTING 1" COPPER WATER LINE

47 PROPOSED 1" COPPER CONNECTION FROM ADU TO EXISTING WATER LINE

48 PROPOSED CLEANOUT LOCATION NEW SANITARY SEWER FOR ADU IS CONNECTED TO EXISTING 4"ABS SEWER LATERAL 3

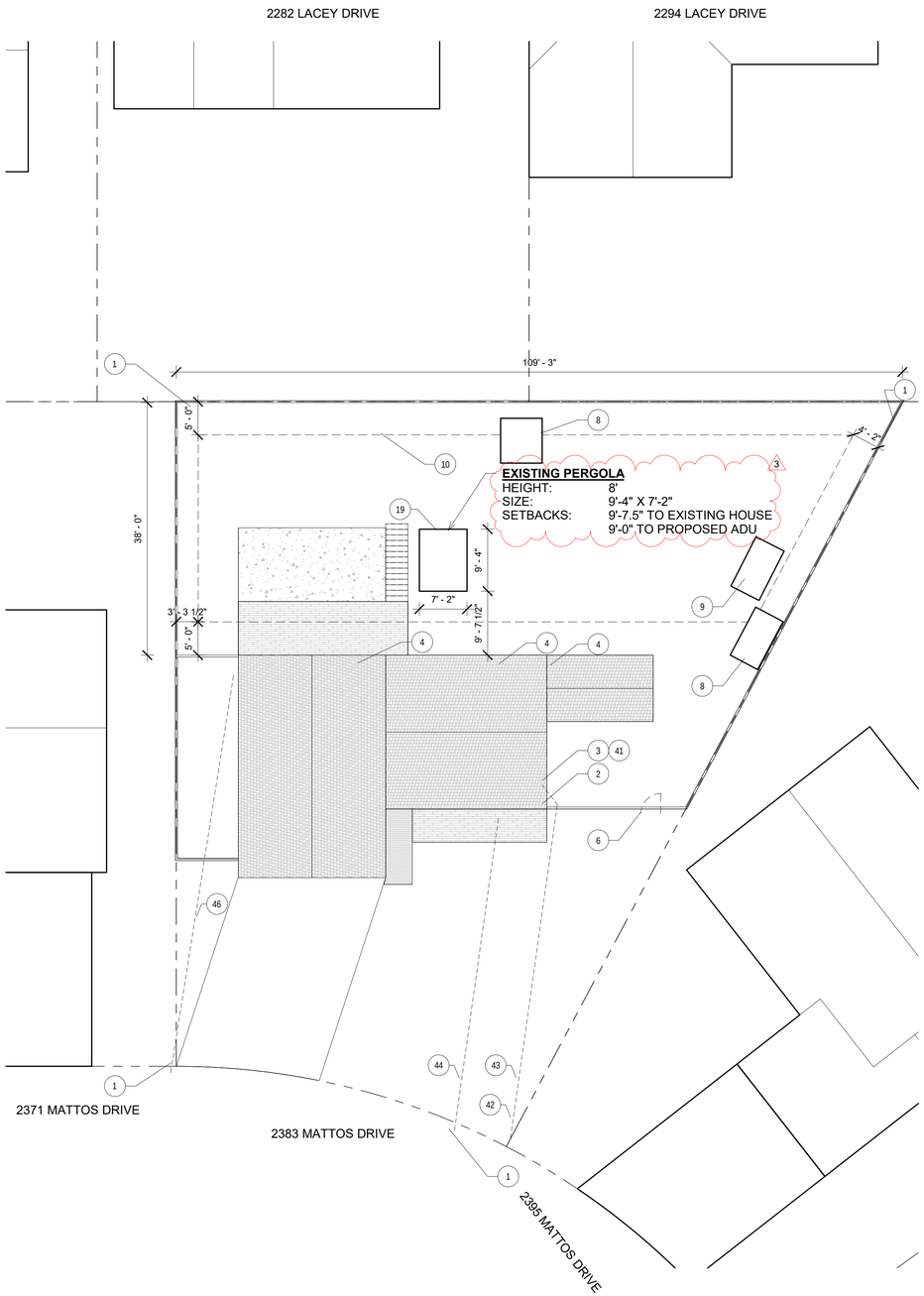

SITE PLAN_EXISTING 1
3/32" = 1'-0"

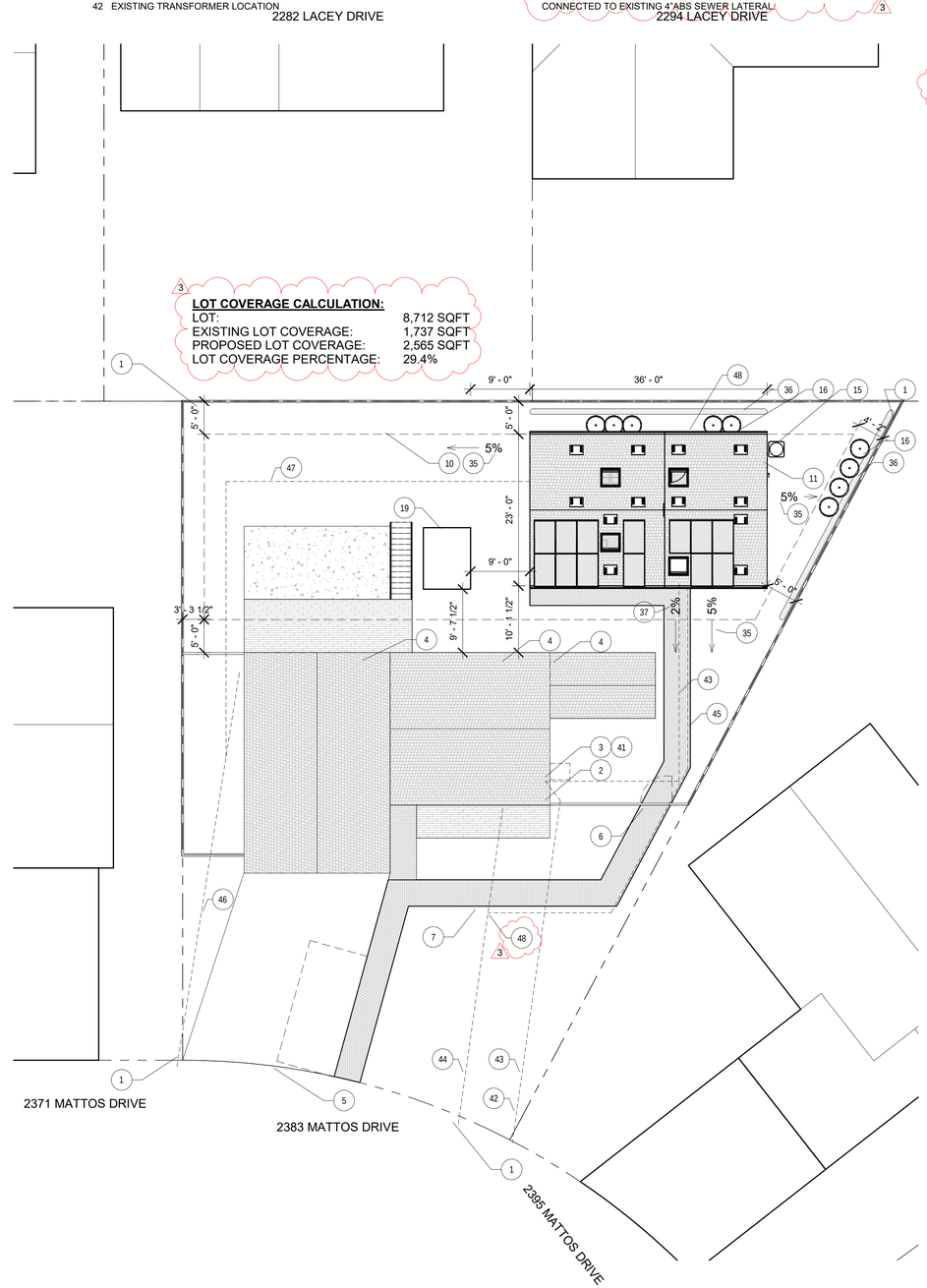

SITE PLAN_PROPOSED 2
3/32" = 1'-0"

0' 4' 8' 16' 32'

SHEET NOTES

1 PROPERTY LINE 3

2 GAS METER LOCATION: EXISTING: NO NEW GAS METER

3 NEW 200 AMP ELECTRICAL PANEL FOR ADU NEXT TO EXISTING 200 AMP MAIN PANEL FOR PRIMARY DWELLING UNIT. THERE SHALL BE A MIN. 30" WIDE X 36" DEEP CLEAR WORKING SPACE IN FRONT OF THE PANEL AS PER CEC 110.26

4 EXISTING STRUCTURE: NO CHANGE

5 REQUIRED OFF-STREET PARKING SPACE: 9' X 19'

6 PROPOSED GATE TO REAR YARD: GATE SHALL BE MIN. 48" IN WIDTH AND SHALL REMAIN UNLOCKED (LATCH IS OK)

7 PROPOSED MIN. 48" WIDE PAVED WALKWAY FROM THE FRONT OF THE PROPERTY (OR PUBLIC SIDEWALK) TO THE ENTRANCE DOOR OF THE ADU

8 EXISTING SHED: TO BE REMOVED

9 EXISTING PLAY STRUCTURE: TO BE REMOVED 3

10 ADU SETBACK REQUIREMENTS

11 PROPOSED ADU

12 PROPOSED STACKED WASHER / DRYER: EXHAUST DUCT TERMINATION SHALL BE 3 FEET FROM OPENINGS INTO THE BUILDING PER CMC 502.2.

13 PROPOSED WATER HEATER: NEEA HEAT PUMP MODEL: RHEEM PROPH50 T2 RH375-15. WATER HEATERS SHALL BE ANCHORED OR STRAPPED, STRAPS SHALL BE AT POINTS WITHIN THE UPPER ONE-THIRD AND LOWER ONE-THIRD OF THE VERTICAL DIMENSIONS. THE LOWER STRAP MUST BE HELD A MINIMUM OF 4 INCHES ABOVE THE CONTROLS PER CPC 507.2.

14 PROPOSED ELECTRIC STOVE W/ MICROHOOD: EXHAUST DUCT TERMINATION SHALL BE 3 FEET FROM OPENINGS INTO THE BUILDING PER CMC 502.2. AND SHALL COMPLY WITH THE REQUIREMENT UNDER CENC TABLE 150.0-G

15 PROPOSED DUCTED HEAT PUMP HVAC WITH A MINIMUM HEATING VALUE OF 9.5 HSPF2 AND A COOLING VALUE OF 16 SEER / 12 EER: DUCTS TO BE IN ATTIC SPACE. THE OUTDOOR UNIT MUST BE INSTALLED A MINIMUM 3 FEET FROM THE PROPERTY LINE. PROVIDE A MINIMUM 3" SLAB UNDERNEATH CONDENSER AND ATTACH UNIT TO THE SLAB. OUTDOOR CONDENSING UNITS SHALL HAVE A CLEARANCE OF AT LEAST 5 FEET FROM THE OUTLET OF ANY DRYER VENT (CENC 150.0(H)3A) A READILY ACCESSIBLE APPROVED DISCONNECT MUST BE INSTALLED ON THE ELECTRIC SUPPLY ADJACENT TO AND IN SIGHT FROM THE EQUIPMENT (CMC 303.8.5) (CEC 440.14). A CLEAR WORKING SPACE 30" WIDE X 36" DEEP MUST BE PROVIDED IN FRONT OF THE DISCONNECT (CEC 110.26(A)).A 15- OR 20-AMP RECEPTACLE OUTLET MUST BE INSTALLED AT AN ACCESSIBLE LOCATION FOR THE SERVICING OF THE HEATING AND AIR CONDITIONING EQUIPMENT. THE RECEPTACLE SHALL BE LOCATED ON THE SAME LEVEL AND WITHIN 25 FEET OF THE EQUIPMENT. THE RECEPTACLE OUTLET SHALL NOT BE CONNECTED ON THE LOAD SIDE OF THE DISCONNECT SWITCH. (CMC 301.4) (CEC 210.63) RECEPTACLES LOCATED OUTDOORS SHALL BE GFCI (CEC 210.8).

16 PROPOSED VERTICAL SCREENING EVERGREEN LANDSCAPING

17 PROPOSED GARBAGE DISPOSAL W/ BUTTON

18 POSSIBLE SOLAR PV ARRAY LOCATION

19 EXISTING PERGOLA: NO CHANGE

20 STEP HEIGHT AT ENTRY DOOR TO BE 4". MAX STEP HEIGHT IS 7-3/4" BELOW THE TOP OF THRESHOLD AS PER CRC 311.3.1 EXCEPTION.

21 GLAZING IN FIXED AND OPERABLE PANELS OF SLIDING DOORS SHALL BE CONSIDERED TO BE HAZARDOUS LOCATION, IT SHALL BE OF TEMPERED GLASS PER CRC R308.4.1.

22 WINDOW IS LESS THAN 60" MEASURED HORIZONTALLY FROM BATHTUB SHALL BE CONSIDERED TO BE A HAZARDOUS LOCATION AND BE TEMPERED GLASS PER CRC R308.4.5 EXCEPTION.

23 WIDTH OF THE HALLWAY TO THE PRIMARY BEDROOM SHALL NOT BE LESS THAN 36" PER CRC R311.6.

24 ATTIC ACCESS FOR ADU AS PER CRC R807.1, ROUGH-FRAMED OPENING SHALL BE NOT LESS THAN 22 INCHES BY 30 INCHES AND LOCATED IN A CEILING WHERE MINIMUM UNOBSTRUCTED HEAD ROOM IN THE ATTIC SPACE IS 30 INCHES.

25 ALL THE RECEPTACLES IN EXTERIOR SHALL BE GFCI, WEATHERPROOF (WP) AND WEATHER-RESISTANT (WR) PER CEC 210.8 AND 406.9.

26 EXTERIOR LIGHTING SHALL BE CONTROLLED BY A PHOTOCELL AND A MOTION SENSOR OR AN AUTOMATIC TIME SWITCH CONTROL; OR CONTROLLED BY AN ASTRONOMICAL TIME CLOCK CONTROL PER CENC 150.0(K)3.

27 LUMINAIRE SHALL BE CONTROLLED BY AN OCCUPANT OR VACANCY SENSOR PROVIDING AUTOMATIC-OFF FUNCTIONALITY PER CENC 150.0 (K) 2E. AND SHALL BE A HIGH-EFFICACY LIGHT FIXTURE PER CENC 150.0(K)5.

28 EXHAUST FAN MUST BE CONTROLLED BY HUMIDITY CONTROL PER CGBC 4.506.1(2).PROVIDE MIN. OF 50 CFM WITH MAX. RATING OF 3.0 SONES PER CMC TABLE 403.7 & CRC 303.3.

29 PROPOSED O'HAGIN ROOF VENT PROVIDING MIN 72 SQ. IN. NET VENTILATION

30 36" MIN REQUIRED PV PATHWAY

31 VENTILATION SYSTEM THAT SERVES AS IAQ WITH 52 CFM MIN. EXHAUST RATE

32 THE MANUAL SWITCH OF THE VENTILATION SYSTEM PROVIDED FOR IAQ REQUIRED PER T-24 SHALL HAVE A LABEL "THIS SWITCH CONTROLS THE INDOOR AIR QUALITY VENTILATION FOR THE HOME. LEAVE IT ON UNLESS THE OUTDOOR AIR QUALITY IS VERY POOR" PER CENC 150.0(O)1.I.

33 IAQ VENTILATION SYSTEM EXHAUST VENT

34 SUPPLY REGISTER AND RETURN GRILL LOCATIONS FOR HVAC SYSTEM

EXTERIOR MATERIAL NOTES

NOTE: NOT ALL NOTES ARE USED ON EVERY SHEET

A PLASTER: MATCH PRIMARY DWELLING
B ASPHALT SHINGLE ROOFING
C VINYL WINDOWS
D SLIDING GLASS DOOR
E ENTRY DOOR

CEILING LEGEND

C1 SEE 5/A4.1 FOR CEILING/FLOOR DETAIL
C2 SEE 6/A4.1 FOR CEILING/ROOF DETAIL
CO2 + SMOKE DETECTOR
SUPPLY REGISTER
UNDERCABINET STRIP LIGHT
4" RECESSED LED
OUTDOOR SCONCE
VANITY SCONCE
4" EXHAUST FAN: DUCT TERMINATION SHALL BE 3 FEET FROM OPENINGS INTO THE BUILDING PER CMC 502.2.

WALL LEGEND

NEW WALL W1 SEE 3/A4.1 W2 SEE 4/A4.1

FLOOR LEGEND

PAVING
LUXURY VINYL PLANK
DECKING
TILE FLOORING

WINDOW LEGEND

TYPE NUMBER

DOOR LEGEND

NUMBER

DESIGN EVEREST
CONSULTING ENGINEERS
365 FLOWER LANE
MOUNTAIN VIEW, CA 94043
PHONE: (888) 311-3015 FAX: (650) 695-1801

2387 MATTOS DRIVE
ADU BUILDING PERMIT

REV	DATE	REMARKS
0	02.14.2023	BUILDING PERMIT
1	05.13.2023	REVISION 1
2	07.24.2023	REVISION 2
3	10.04.2023	REVISION 3

LICENSED ARCHITECT
NATHAN CONRAD
C36505
5-31-2025
STATE OF CALIFORNIA

SIGN DATE:
DATE:
SCALE:
DRAWN BY: NC
CKD BY: NC
PROJECT#: 202212048

A1.0
SITE PLAN

ATTIC VENTILATION CALCULATION: CRC R806.2

NEW ROOF AREA	374.0 SQFT
REQUIRED NET FREE VENTILATION AREA (1/150)	2.5 SQFT
REQUIRED NET FREE VENTILATION AREA (SQIN)	359.0 SQIN
PROVIDED (6) O'HAGIN VENTS @72 SQIN EACH=	432.0 SQIN
432.0 SQ. IN. PROVIDED > 359.0 SQ. IN. REQUIRED	= OK

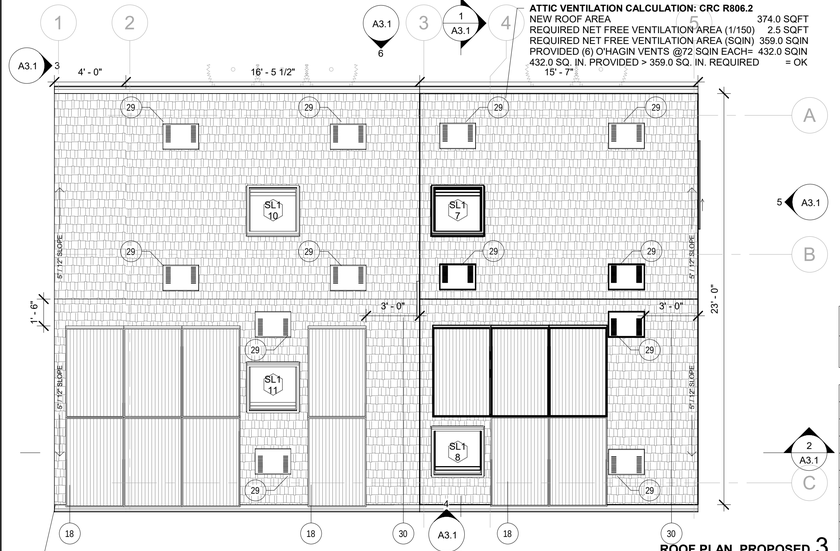

ROOF PLAN_PROPOSED 3
1/4" = 1'-0"

ATTIC VENTILATION CALCULATION: CRC R806.2

NEW ROOF AREA	396.7 SQFT
REQUIRED NET FREE VENTILATION AREA (1/150)	2.6 SQFT
REQUIRED NET FREE VENTILATION AREA (SQ IN)	380.1 SQIN
PROVIDED (6) O'HAGIN VENT PROVIDING 72 SQIN EACH =	432.0 SQIN
432.0 SQ. IN. PROVIDED > 380.1 SQ. IN. REQUIRED	= OK

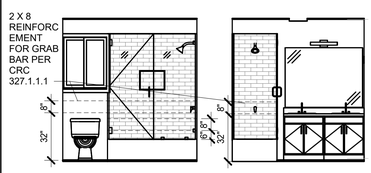

BATH ELEVATION NORTH 7
1/4" = 1'-0"

BATH ELEVATION EAST 8
1/4" = 1'-0"

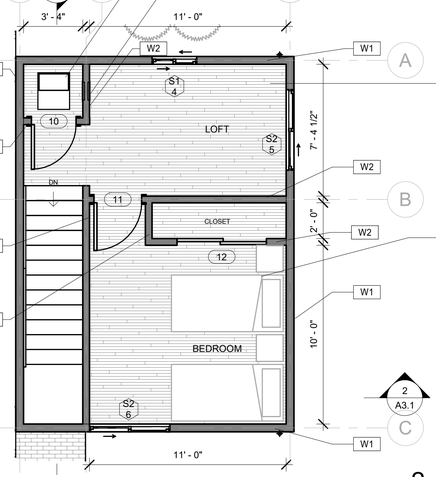

SECOND FLOOR_PROPOSED 2
1/4" = 1'-0"

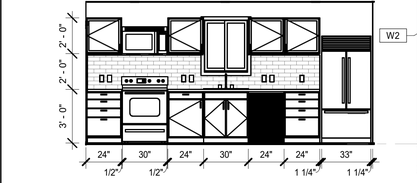

KITCHEN ELEVATION 6
1/4" = 1'-0"

WINDOW SCHEDULE														
MARK	ROOM	TYPE	GLAZING		OPENING		SILL HEIGHT	EGRESS	OPERABLE SKYLIGHT	FRAME	TEMPERED GLASS	U-FACTOR	SHGC FACTOR	FROSTED GLASS
			WIDTH	HEIGHT	WIDTH	HEIGHT								
1	KITCHEN	S1	2' - 6"	3' - 0"	1' - 2"	3' - 0"	4' - 0"			VINYL		.29	0.23	No
2	BATH	S1	2' - 6"	3' - 0"	1' - 2"	3' - 0"	4' - 0"			VINYL	Yes	.29	0.23	No
3	PRIMARY BEDROOM	S2	4' - 6"	3' - 0"	2' - 2"	3' - 0"	3' - 0"	Y		VINYL		.29	0.23	No
4	LOFT	S1	2' - 6"	3' - 0"	1' - 2"	3' - 0"	3' - 0"			VINYL		.29	0.23	Yes
5	LOFT	S2	4' - 6"	3' - 0"	2' - 2"	3' - 0"	3' - 0"			VINYL		.29	0.23	Yes
6	BEDROOM	S2	4' - 6"	3' - 0"	2' - 2"	3' - 0"	3' - 0"	Y		VINYL	Yes	.29	0.23	Yes
7	LOFT	SL1	2' -10"	2' - 10"					Y			.47	0.25	No
8	STAIR	SL1	2' -10"	2' - 10"					Y			.47	0.25	No
9	LIVING ROOM	S1	2' - 6"	2' - 10"	1' - 2"	3' - 0"	3' - 0"			VINYL		.29	0.23	No
10	DINNING	SL1	2' -10"	2' - 10"					Y			.47	0.25	No
11	LIVING ROOM	SL1	2' -10"	2' - 10"					Y			.47	0.25	No

DOOR SCHEDULE						
MARK	ROOM	TYPE	WIDTH	HEIGHT	EXTERIOR	TEMPERED GLASS
1	DINING	SG	6' - 0"	6' - 8"	Y	Y
2	LIVING	SG	6' - 0"	6' - 8"	Y	Y
3	ENTRY	D	3' - 0"	6' - 8"	Y	
4	WATER HEATER	P	2' - 6"	6' - 8"		
5	CLOSET	P	2' - 6"	6' - 8"		
6	WASHER / DRYER	p	2' - 8"	6' - 8"		
7	PRIMARY BEDROOM	P	2' - 8"	6' - 8"		
8	BATH	P	2' - 8"	6' - 8"		
9	CLOSET	S	5' - 0"	6' - 8"		
10	FURNACE	P	2' - 6"	6' - 8"		
11	BEDROOM	P	2' - 8"	6' - 8"		
12	CLOSET	S	5' - 0"	6' - 8"		

WHERE A CLOSET IS DESIGNED FOR THE INSTALLATION OF A CLOTHES DRYER, AN OPENING OF NOT LESS THAN 100 SQUARE INCHES FOR MAKEUP AIR SHALL BE PROVIDED IN THE DOOR AS PER CMC 504.4.1.

LOFT: 81 SQFT

GLAZING AREA REQUIREMENT CBC 2022 SEC 1204.2	
REQUIRED (8%)	*6.5 SQFT*
PROVIDED (4 + 5)	21.0 SQFT
OPENABLE AREA REQUIREMENT CBC 2022 SEC 1202.5.1	
REQUIRED (4%)	*3.3 SQFT*
PROVIDED (4 + 5)	10.0 SQFT

BEDROOM: 117 SF

GLAZING AREA REQUIREMENT CBC 2022 SEC 1204.2	
REQUIRED (8%)	*9.4 SQFT*
PROVIDED (5)	13.5 SQFT
OPENABLE AREA REQUIREMENT CBC 2022 SEC 1202.5.1	
REQUIRED (4%)	*4.7 SQFT*
PROVIDED (5)	6.5 SQFT
EMERGENCY ESCAPE AND RESCUE CBC 2022 SEC 1031.3	
MIN NET CLEAR OPENING	*5.7 SQFT*
PROVIDED (5)	6.5 SQFT
MIN NET CLEAR OPENING HEIGHT	*24 IN*
PROVIDED NET CLEAR OPENING HEIGHT (5)	36 IN
MIN NET CLEAR OPENING WIDTH	*20 IN*
PROVIDED NET CLEAR OPENING WIDTH (5)	26 IN
MAXIMUM HEIGHT FROM FLOOR	*44 IN*
PROVIDED (5)	36 IN
WINDOW SILL HEIGHT	3' - 0"
(5)	

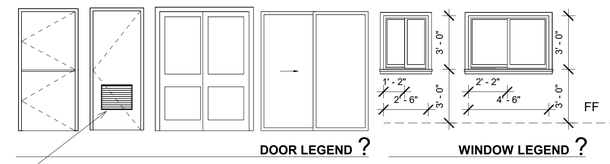

DOOR LEGEND ?

WINDOW LEGEND ?

OPENING OF NOT LESS THAN 100 SQUARE INCHES AT WASHER/DRYER CLOEST.

ELECTRICAL AND LIGHTING NOTES

A. AFCI PROTECTION IS REQUIRED IN HALLWAYS, LIVING ROOMS, DINING ROOMS, CLOSETS, LAUNDRY AREAS, OR SIMILAR ROOMS OR AREAS. CEC 210.12(A).

B. GFCI OUTLETS SHALL NOT MORE THAN 12" FROM THE TOP OF COUNTER.

C. ALL LIGHTING TO BE HIGH EFFICACY. CENC 150.0(K)1(A).

D. FIXTURES INSTALLED IN WET OR DAMP LOCATIONS SHALL BE MARKED, "SUITABLE FOR WET LOCATIONS" PER CEC SECTION 410.10(A).

E. ALL 120 VOLT, 15- AND 20-AMP RECEPTACLES SHALL BE LISTED TAMPER-RESISTANT PER CEC 406.12.

F. 200 AMP SUB ELECTRICAL PANEL. UFER GEC IS REQUIRED, AND A MAIN BONDING JUMPER SHALL NOT BE INSTALLED IN THE SUBPANEL.

MECHANICAL NOTES

G. INDOOR AIR HANDLER BRAND (LENNOX), MODEL NAME (CBA27UHE) OR EQUIVALENT TO BE INSTALLED AS SPECIFIED ON THE T-24 ENERGY COMPLIANCE FORMS. SEE 11/A4.1 FOR CUT SHEET.

H. OUTDOOR HEAT PUMP BRAND (LENNOX), MODEL NAME (ML16MP1) OR EQUIVALENT TO BE INSTALLED AS SPECIFIED ON THE T-24 ENERGY COMPLIANCE FORMS. SEE 12/A4.1 FOR CUT SHEET.

I KITCHEN RANGE HOOD TO HAVE MINIMUM 130 CFM TO COMPLY WITH THE REQUIREMENT UNDER CENC TABLE 150.0-G.

J CLOTHES DRYER EXHAUST DUCTS SHALL TERMINATE TO THE OUTSIDE OF THE BUILDING AS PER SECTION 502.2.1 AND SHALL BE EQUIPPED WITH A BACKDRAFT DAMPER.

K WHERE A CLOSET IS DESIGNED FOR THE INSTALLATION OF A CLOTHES DRYER, AN OPENING OF NOT LESS THAN 100 SQUARE INCHES FOR MAKEUP AIR SHALL BE PROVIDED IN THE DOOR OR BY OTHER APPROVED MEANS AS PER CMC 504.4.1.

L DRYER EXHAUST DUCT SHALL NOT EXCEED A TOTAL COMBINED HORIZONTAL AND VERTICAL LENGTH OF 14 FT. LENGTH WITH MAXIMUM OF TWO 90-DEGREE ELBOWS. DEDUCT 2 FT. FOR EACH ADDITIONAL ELBOW IN EXCESS OF TWO PER CMC 504.4.2.1.

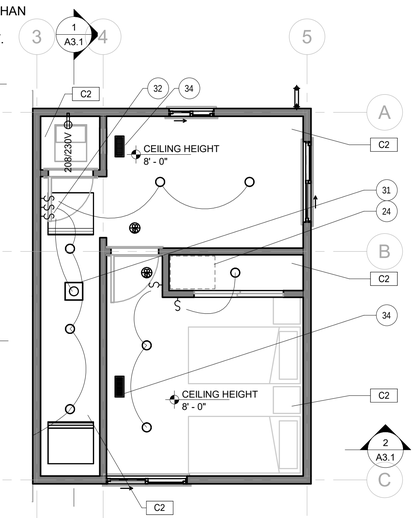

SECOND FLOOR LIGHTING AND ELECTRICAL PLAN 5
1/4" = 1'-0"

2 X 8 REINFORCEMENT ALONG WALL ADJACENT TO WATER CLOSET FOR GRAB BAR PER CRC 327.1.1.1

KITCHEN / DINING / LIVING: 306 SQFT

GLAZING AREA REQUIREMENT CBC 2022 SEC 1204.2	
REQUIRED (8%)	*24.5 SQFT*
PROVIDED (1 + 9 + 1(DOOR) + 2(DOOR))	95.0 SQFT
OPENABLE AREA REQUIREMENT CBC 2022 SEC 1202.5.1	
REQUIRED (4%)	*12.3 SQFT*
PROVIDED (1 + 9 + 1(DOOR) + 2(DOOR))	45.9 SQFT

BEDROOM: 117 SF

GLAZING AREA REQUIREMENT CBC 2022 SEC 1204.2	
REQUIRED (8%)	*9.4 SQFT*
PROVIDED (3)	13.5 SQFT
OPENABLE AREA REQUIREMENT CBC 2022 SEC 1202.5.1	
REQUIRED (4%)	*4.7 SQFT*
PROVIDED (3)	6.5 SQFT
EMERGENCY ESCAPE AND RESCUE CBC 2022 SEC 1031.3	
MIN NET CLEAR OPENING	*5.7 SQFT*
PROVIDED (3)	6.5 SQFT
MIN NET CLEAR OPENING HEIGHT	*24 IN*
PROVIDED NET CLEAR OPENING HEIGHT (3)	36 IN
MIN NET CLEAR OPENING WIDTH	*20 IN*
PROVIDED NET CLEAR OPENING WIDTH (3)	26 IN
MAXIMUM HEIGHT FROM FLOOR	*44 IN*
PROVIDED (3)	36 IN
WINDOW SILL HEIGHT	3' - 0"
(5)	

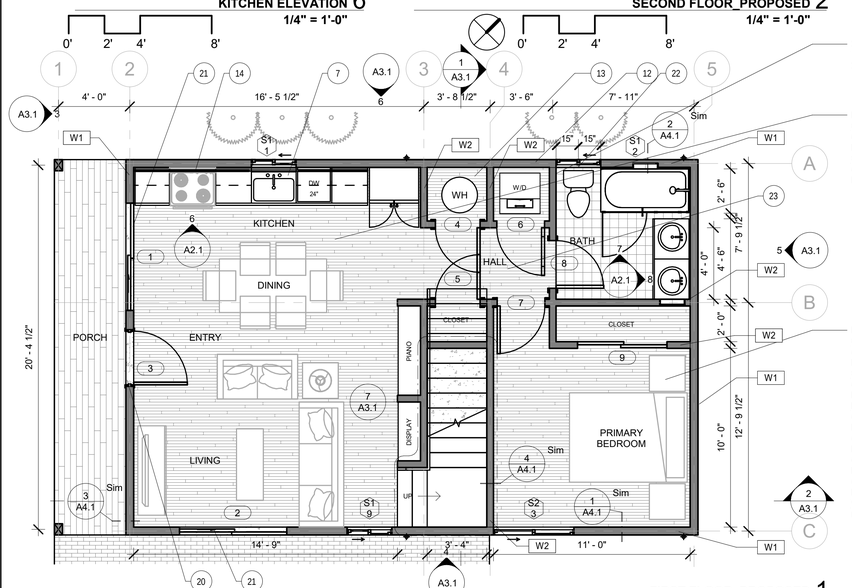

FIRST FLOOR_PROPOSED 1
1/4" = 1'-0"

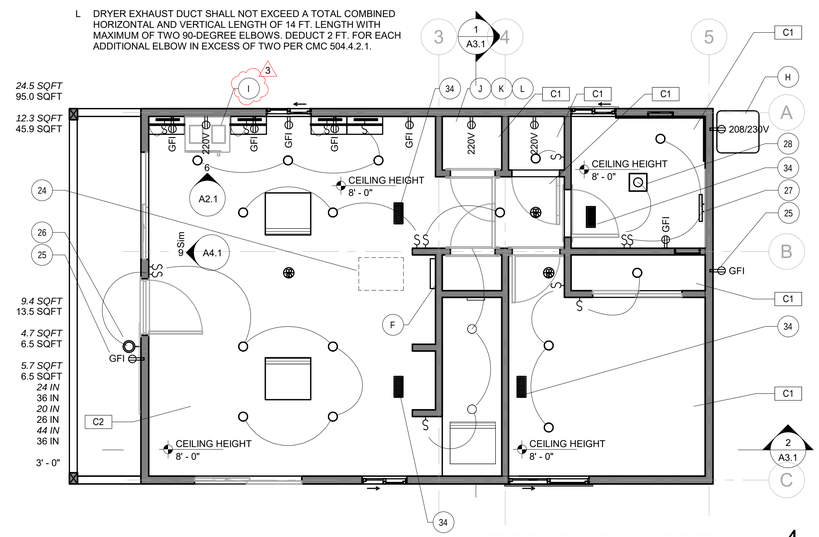

FIRST FLOOR LIGHTING AND ELECTRICAL PLAN 4
1/4" = 1'-0"

SHEET NOTES

1. PROPERTY LINE
2. GAS METER LOCATION: EXISTING: NO NEW GAS METER
3. NEW 200 AMP ELECTRICAL PANEL FOR ADU NEXT TO EXISTING 200 AMP MAIN PANEL FOR PRIMARY DWELLING UNIT. THERE SHALL BE A MIN. 30" WIDE X 36" DEEP CLEAR WORKING SPACE IN FRONT OF THE PANEL AS PER CEC 110.26
4. EXISTING STRUCTURE: NO CHANGE
5. REQUIRED OFF-STREET PARKING SPACE: 9' X 19'
6. PROPOSED GATE TO REAR YARD: GATE SHALL BE MIN. 48" IN WIDTH AND SHALL REMAIN UNLOCKED (LATCH IS OK)
7. PROPOSED MIN. 48" WIDE PAVED WALKWAY FROM THE FRONT OF THE PROPERTY (OR PUBLIC SIDEWALK) TO THE ENTRANCE DOOR OF THE ADU
8. EXISTING SHED: TO BE REMOVED
9. EXISTING PLAY STRUCTURE: TO BE REMOVED
10. ADU SETBACK REQUIREMENTS
11. PROPOSED ADU
12. PROPOSED STACKED WASHER / DRYER: EXHAUST DUCT TERMINATION SHALL BE 3 FEET FROM OPENINGS INTO THE BUILDING PER CMC 502.2.
13. PROPOSED WATER HEATER: NEEA HEAT PUMP MODEL: RHEEM PROPH50 T2 RH375-15. WATER HEATERS SHALL BE ANCHORED OR STRAPPED, STRAPS SHALL BE AT POINTS WITHIN THE UPPER ONE-THIRD AND LOWER ONE-THIRD OF THE VERTICAL DIMENSIONS. THE LOWER STRAP MUST BE HELD A MINIMUM OF 4 INCHES ABOVE THE CONTROLS PER CPC 507.2.
14. PROPOSED ELECTRIC STOVE W/ MICROHOOD: EXHAUST DUCT TERMINATION SHALL BE 3 FEET FROM OPENINGS INTO THE BUILDING PER CMC 502.2. AND SHALL COMPLY WITH THE REQUIREMENT UNDER CENC TABLE 150.0-G
15. PROPOSED DUCTED HEAT PUMP HVAC WITH A MINIMUM HEATING VALUE OF 9.5 HSPF2 AND A COOLING VALUE OF 16 SEER / 12 EER: DUCTS TO BE IN ATTIC SPACE. THE OUTDOOR UNIT MUST BE INSTALLED A MINIMUM 3 FEET FROM THE PROPERTY LINE. PROVIDE A MINIMUM 3" SLAB UNDERNEATH CONDENSER AND ATTACH UNIT TO THE SLAB. OUTDOOR CONDENSING UNITS SHALL HAVE A CLEARANCE OF AT LEAST 5 FEET FROM THE OUTLET OF ANY DRYER VENT (CENC 150.0(H)3A) A READILY ACCESSIBLE APPROVED DISCONNECT MUST BE INSTALLED ON THE ELECTRIC SUPPLY ADJACENT TO AND IN SIGHT FROM THE EQUIPMENT (CMC 303.8.5) (CEC 440.14). A CLEAR WORKING SPACE 30" WIDE X 36" DEEP MUST BE PROVIDED IN FRONT OF THE DISCONNECT (CEC 110.26(A)).A 15- OR 20-AMP RECEPTACLE OUTLET MUST BE INSTALLED AT AN ACCESSIBLE LOCATION FOR THE SERVICING OF THE HEATING AND AIR CONDITIONING EQUIPMENT. THE RECEPTACLE SHALL BE LOCATED ON THE SAME LEVEL AND WITHIN 25 FEET OF THE EQUIPMENT. THE RECEPTACLE OUTLET SHALL NOT BE CONNECTED ON THE LOAD SIDE OF THE DISCONNECT SWITCH. (CMC 301.4) (CEC 210.63) RECEPTACLES LOCATED OUTDOORS SHALL BE GFCI (CEC 210.8).
16. PROPOSED VERTICAL SCREENING EVERGREEN LANDSCAPING
17. PROPOSED GARBAGE DISPOSAL W/ BUTTON
18. POSSIBLE SOLAR PV ARRAY LOCATION
19. EXISTING PERGOLA: NO CHANGE
20. STEP HEIGHT AT ENTRY DOOR TO BE 4". MAX STEP HEIGHT IS 7-3/4" BELOW THE TOP OF THRESHOLD AS PER CRC 311.3.1 EXCEPTION.
21. GLAZING IN FIXED AND OPERABLE PANELS OF SLIDING DOORS SHALL BE CONSIDERED TO BE HAZARDOUS LOCATION, IT SHALL BE OF TEMPERED GLASS PER CRC R308.4.1.
22. WINDOW IS LESS THAN 60" MEASURED HORIZONTALLY FROM BATHTUB SHALL BE CONSIDERED TO BE A HAZARDOUS LOCATION AND BE TEMPERED GLASS PER CRC R308.4.5 EXCEPTION.
23. WIDTH OF THE HALLWAY TO THE PRIMARY BEDROOM SHALL NOT BE LESS THAN 36" PER CRC R311.6.
24. ATTIC ACCESS FOR ADU AS PER CRC R807.1, ROUGH-FRAMED OPENING SHALL BE NOT LESS THAN 22 INCHES BY 30 INCHES AND LOCATED IN A CEILING WHERE MINIMUM UNOBSTRUCTED HEAD ROOM IN THE ATTIC SPACE IS 30 INCHES.
25. ALL THE RECEPTACLES IN EXTERIOR SHALL BE GFCI, WEATHERPROOF (WP) AND WEATHER-RESISTANT (WR) PER CEC 210.8 AND 406.9.
26. EXTERIOR LIGHTING SHALL BE CONTROLLED BY A PHOTOCELL AND A MOTION SENSOR OR AN AUTOMATIC TIME SWITCH CONTROL; OR CONTROLLED BY AN ASTRONOMICAL TIME CLOCK CONTROL PER CENC 150.0(K)3.
27. LUMINAIRE SHALL BE CONTROLLED BY AN OCCUPANT OR VACANCY SENSOR PROVIDING AUTOMATIC-OFF FUNCTIONALITY PER CENC 150.0 (K) 2E. AND SHALL BE A HIGH-EFFICACY LIGHT FIXTURE PER CENC 150.0(K)5.
28. EXHAUST FAN MUST BE CONTROLLED BY HUMIDITY CONTROL PER CGBC 4.506.1(2).PROVIDE MIN. OF 50 CFM WITH MAX. RATING OF 3.0 SONES PER CMC TABLE 403.7 & CRC 303.3.
29. PROPOSED O'HAGIN ROOF VENT PROVIDING MIN 72 SQ. IN. NET VENTILATION
30. 36" MIN REQUIRED PV PATHWAY
31. VENTILATION SYSTEM THAT SERVES AS IAQ WITH 52 CFM MIN. EXHAUST RATE
32. THE MANUAL SWITCH OF THE VENTILATION SYSTEM PROVIDED FOR IAQ REQUIRED PER T-24 SHALL HAVE A LABEL "THIS SWITCH CONTROLS THE INDOOR AIR QUALITY VENTILATION FOR THE HOME. LEAVE IT ON UNLESS THE OUTDOOR AIR QUALITY IS VERY POOR" PER CENC 150.0(O)1.I.
33. IAQ VENTILATION SYSTEM EXHAUST VENT
34. SUPPLY REGISTER AND RETURN GRILL LOCATIONS FOR HVAC SYSTEM

EXTERIOR MATERIAL NOTES

NOTE: NOT ALL NOTES ARE USED ON EVERY SHEET

A	PLASTER: MATCH PRIMARY DWELLING	C	VINYL WINDOWS
B	ASPHALT SHINGLE ROOFING	D	SLIDING GLASS DOOR
		E	ENTRY DOOR

CEILING LEGEND

C1 SEE 5/A4.1 FOR CEILING/FLOOR DETAIL	C2 SEE 6/A4.1 FOR CEILING/ROOF DETAIL
CO2 + SMOKE DETECTOR	SUPPLY REGISTER
UNDERCABINET STRIP LIGHT	4" RECESSED LED
OUTDOOR SCONCE	VANITY SCONCE
4" EXHAUST FAN: DUCT TERMINATION SHALL BE 3 FEET FROM OPENINGS INTO THE BUILDING PER CMC 502.2.	

WALL LEGEND

NEW WALL — W1 SEE 3/A4.1 — W2 SEE 4/A4.1

FLOOR LEGEND

PAVING — LUXURY VINYL PLANK

DECKING — TILE FLOORING

WINDOW LEGEND — TYPE NUMBER

DOOR LEGEND — NUMBER

DESIGN EVEREST
CONSULTING ENGINEERS
365 FLOWER LANE
MOUNTAIN VIEW, CA 94043
PHONE: (888) 311-3015 FAX: (650) 695-1801

2387 MATTOS DRIVE

ADU BUILDING PERMIT

REV	DATE	REMARKS
0	02.14.2023	BUILDING PERMIT
1	05.13.2023	REVISION 1
2	07.24.2023	REVISION 2
3	10.04.2023	REVISION 3

LICENSED ARCHITECT
NATHAN CONRAD
C36505
5-31-2025
STATE OF CALIFORNIA

SIGN DATE:

DATE:

SCALE:

DRAWN BY: NC

CKD BY: NC

PROJECT#: 202212048

A2.1

FLOOR PLANS / LIGHTING / ELEC / DOORS / WINDOWS

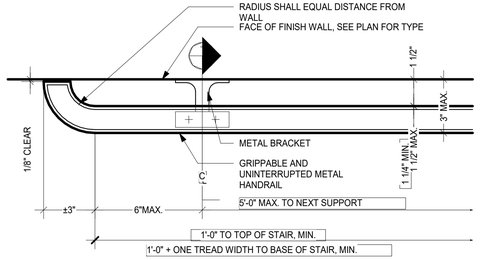

METAL HANDRAIL PLAN DETAIL 10
3" = 1'-0"

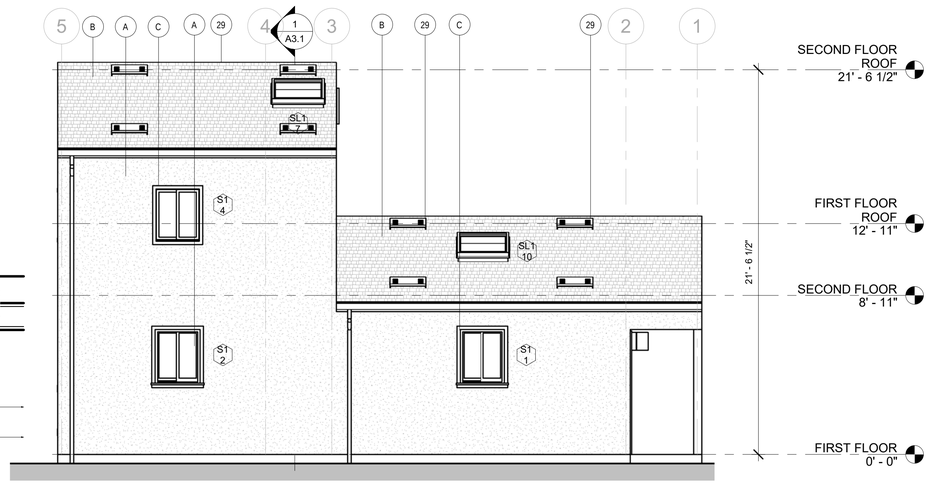

NORTH ELEVATION_PROPOSED 6
1/4" = 1'-0"
0' 2' 4' 8'

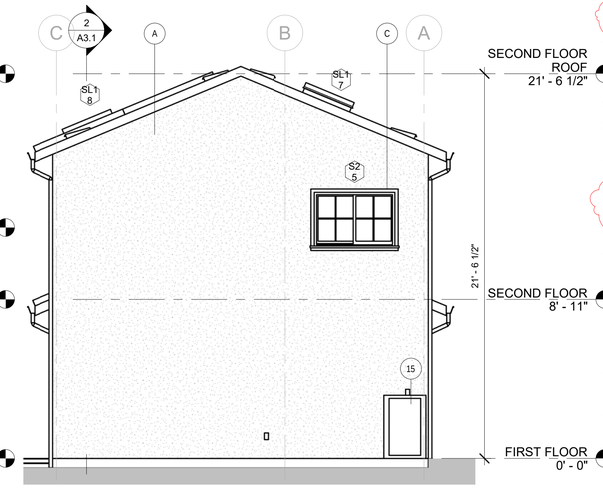

EAST ELEVATION_PROPOSED 5
1/4" = 1'-0"
0' 2' 4' 8'

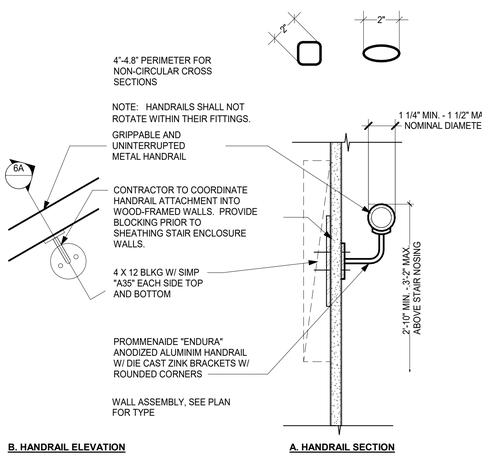

METAL HANDRAIL DETAIL 9
3" = 1'-0"

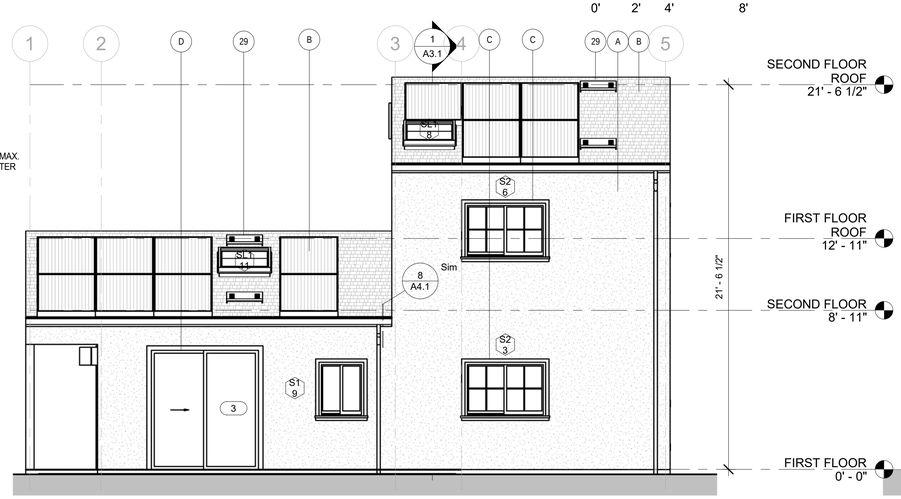

SOUTH ELEVATION_PROPOSED 4
1/4" = 1'-0"
0' 2' 4' 8'

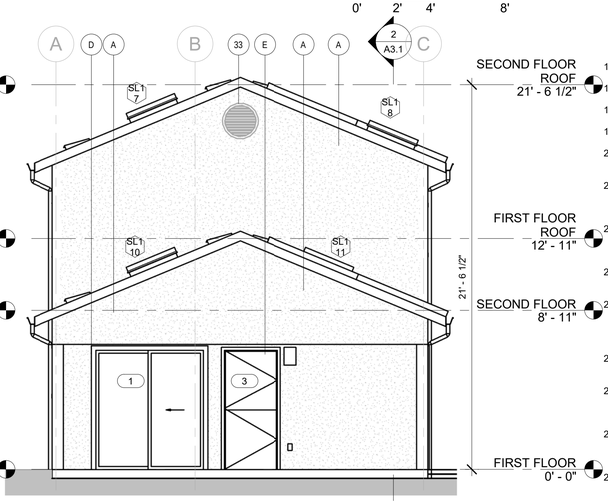

WEST ELEVATION_PROPOSED 3
1/4" = 1'-0"
0' 2' 4' 8'

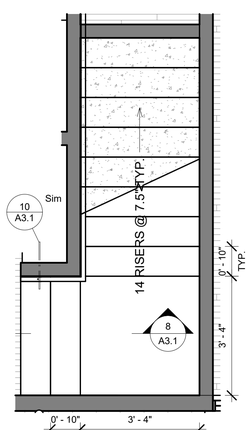

STAIR PLAN 7
1/2" = 1'-0"

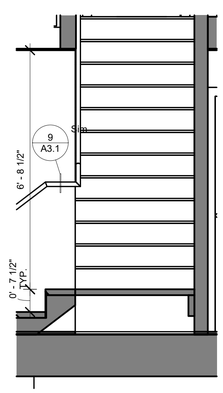

STAIR SECTION / ELEVATION 8
1/2" = 1'-0"

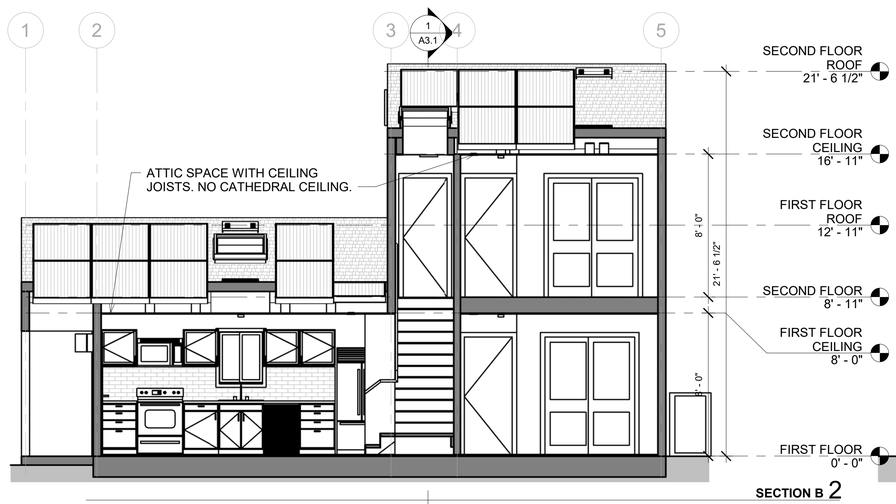

SECTION B 2
1/4" = 1'-0"
0' 2' 4' 8'

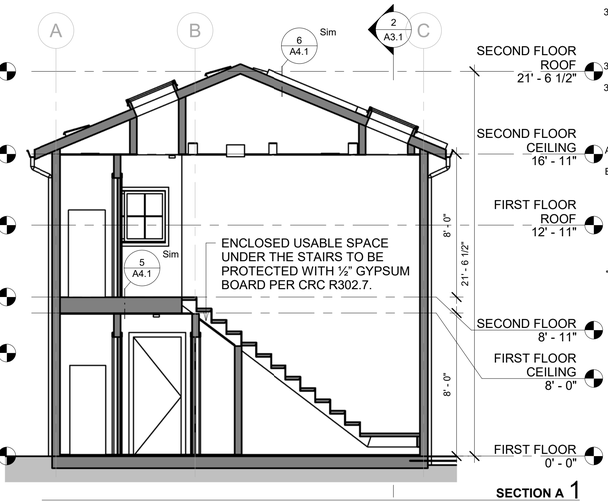

SECTION A 1
1/4" = 1'-0"
0' 2' 4' 8'

SHEET NOTES

1. PROPERTY LINE
2. GAS METER LOCATION: EXISTING: NO NEW GAS METER
3. NEW 200 AMP ELECTRICAL PANEL FOR ADU NEXT TO EXISTING 200 AMP MAIN PANEL FOR PRIMARY DWELLING UNIT. THERE SHALL BE A MIN. 30" WIDE X 36" DEEP CLEAR WORKING SPACE IN FRONT OF THE PANEL AS PER CEC 110.26
4. EXISTING STRUCTURE: NO CHANGE
5. REQUIRED OFF-STREET PARKING SPACE: 9' X 19'
6. PROPOSED GATE TO REAR YARD: GATE SHALL BE MIN. 48" IN WIDTH AND SHALL REMAIN UNLOCKED (LATCH IS OK)
7. PROPOSED MIN. 48" WIDE PAVED WALKWAY FROM THE FRONT OF THE PROPERTY (OR PUBLIC SIDEWALK) TO THE ENTRANCE DOOR OF THE ADU
8. EXISTING SHED: TO BE REMOVED
9. EXISTING PLAY STRUCTURE: TO BE REMOVED
10. ADU SETBACK REQUIREMENTS
11. PROPOSED ADU
12. PROPOSED STACKED WASHER / DRYER: EXHAUST DUCT TERMINATION SHALL BE 3 FEET FROM OPENINGS INTO THE BUILDING PER CMC 502.2.
13. PROPOSED WATER HEATER: NEEA HEAT PUMP MODEL: RHEEM PROPH50 T2 RH375-15. WATER HEATERS SHALL BE ANCHORED OR STRAPPED, STRAPS SHALL BE AT POINTS WITHIN THE UPPER ONE-THIRD AND LOWER ONE-THIRD OF THE VERTICAL DIMENSIONS. THE LOWER STRAP MUST BE HELD A MINIMUM OF 4 INCHES ABOVE THE CONTROLS PER CPC 507.2.
14. PROPOSED ELECTRIC STOVE W/ MICROHOOD: EXHAUST DUCT TERMINATION SHALL BE 3 FEET FROM OPENINGS INTO THE BUILDING PER CMC 502.2. AND SHALL COMPLY WITH THE REQUIREMENT UNDER CENC TABLE 150.0-G
15. PROPOSED DUCTED HEAT PUMP HVAC WITH A MINIMUM HEATING VALUE OF 9.5 HSPF2 AND A COOLING VALUE OF 16 SEER / 12 EER: DUCTS TO BE IN ATTIC SPACE. THE OUTDOOR UNIT MUST BE INSTALLED A MINIMUM 3 FEET FROM THE PROPERTY LINE. PROVIDE A MINIMUM 3" SLAB UNDERNEATH CONDENSER AND ATTACH UNIT TO THE SLAB. OUTDOOR CONDENSING UNITS SHALL HAVE A CLEARANCE OF AT LEAST 5 FEET FROM THE OUTLET OF ANY DRYER VENT (CENC 150.0(H)3A) A READILY ACCESSIBLE APPROVED DISCONNECT MUST BE INSTALLED ON THE ELECTRIC SUPPLY ADJACENT TO AND IN SIGHT FROM THE EQUIPMENT (CMC 303.8.5) (CEC 440.14). A CLEAR WORKING SPACE 30" WIDE X 36" DEEP MUST BE PROVIDED IN FRONT OF THE DISCONNECT (CEC 110.26(A)).A 15- OR 20-AMP RECEPTACLE OUTLET MUST BE INSTALLED AT AN ACCESSIBLE LOCATION FOR THE SERVICING OF THE HEATING AND AIR CONDITIONING EQUIPMENT. THE RECEPTACLE SHALL BE LOCATED ON THE SAME LEVEL AND WITHIN 25 FEET OF THE EQUIPMENT. THE RECEPTACLE OUTLET SHALL NOT BE CONNECTED ON THE LOAD SIDE OF THE DISCONNECT SWITCH. (CMC 301.4) (CEC 210.63) RECEPTACLES LOCATED OUTDOORS SHALL BE GFCI (CEC 210.8).
16. PROPOSED VERTICAL SCREENING EVERGREEN LANDSCAPING
17. PROPOSED GARBAGE DISPOSAL W/ BUTTON
18. POSSIBLE SOLAR PV ARRAY LOCATION
19. EXISTING PERGOLA: NO CHANGE
20. STEP HEIGHT AT ENTRY DOOR TO BE 4". MAX STEP HEIGHT IS 7-3/4" BELOW THE TOP OF THRESHOLD AS PER CRC 311.3.1 EXCEPTION.
21. GLAZING IN FIXED AND OPERABLE PANELS OF SLIDING DOORS SHALL BE CONSIDERED TO BE HAZARDOUS LOCATION, IT SHALL BE OF TEMPERED GLASS PER CRC R308.4.1.
22. WINDOW IS LESS THAN 60" MEASURED HORIZONTALLY FROM BATHTUB SHALL BE CONSIDERED TO BE A HAZARDOUS LOCATION AND BE TEMPERED GLASS PER CRC R308.4.5 EXCEPTION.
23. WIDTH OF THE HALLWAY TO THE PRIMARY BEDROOM SHALL NOT BE LESS THAN 36" PER CRC R311.6.
24. ATTIC ACCESS FOR ADU AS PER CRC R807.1, ROUGH-FRAMED OPENING SHALL BE NOT LESS THAN 22 INCHES BY 30 INCHES AND LOCATED IN A CEILING WHERE MINIMUM UNOBSTRUCTED HEAD ROOM IN THE ATTIC SPACE IS 30 INCHES.
25. ALL THE RECEPTACLES IN EXTERIOR SHALL BE GFCI, WEATHERPROOF (WP) AND WEATHER-RESISTANT (WR) PER CEC 210.8 AND 406.9.
26. EXTERIOR LIGHTING SHALL BE CONTROLLED BY A PHOTOCELL AND A MOTION SENSOR OR AN AUTOMATIC TIME SWITCH CONTROL; OR CONTROLLED BY AN ASTRONOMICAL TIME CLOCK CONTROL PER CENC 150.0(K)3.
27. LUMINAIRE SHALL BE CONTROLLED BY AN OCCUPANT OR VACANCY SENSOR PROVIDING AUTOMATIC-OFF FUNCTIONALITY PER CENC 150.0 (K) 2E. AND SHALL BE A HIGH-EFFICACY LIGHT FIXTURE PER CENC 150.0(K)5.
28. EXHAUST FAN MUST BE CONTROLLED BY HUMIDITY CONTROL PER CGBC 4.506.1(2).PROVIDE MIN. OF 50 CFM WITH MAX. RATING OF 3.0 SONES PER CMC TABLE 403.7 & CRC 303.3.
29. PROPOSED O'HAGIN ROOF VENT PROVIDING MIN 72 SQ. IN. NET VENTILATION
30. 36" MIN REQUIRED PV PATHWAY
31. VENTILATION SYSTEM THAT SERVES AS IAQ WITH 52 CFM MIN. EXHAUST RATE
32. THE MANUAL SWITCH OF THE VENTILATION SYSTEM PROVIDED FOR IAQ REQUIRED PER T-24 SHALL HAVE A LABEL "THIS SWITCH CONTROLS THE INDOOR AIR QUALITY VENTILATION FOR THE HOME. LEAVE IT ON UNLESS THE OUTDOOR AIR QUALITY IS VERY POOR" PER CENC 150.0(O)1.I.
33. IAQ VENTILATION SYSTEM EXHAUST VENT
34. SUPPLY REGISTER AND RETURN GRILL LOCATIONS FOR HVAC SYSTEM

EXTERIOR MATERIAL NOTES

NOTE: NOT ALL NOTES ARE USED ON EVERY SHEET

A PLASTER: MATCH PRIMARY DWELLING
B ASPHALT SHINGLE ROOFING
C VINYL WINDOWS
D SLIDING GLASS DOOR
E ENTRY DOOR

CEILING LEGEND

C1 SEE 5/A4.1 FOR CEILING/FLOOR DETAIL
C2 SEE 6/A4.1 FOR CEILING/ROOF DETAIL
CO2 + SMOKE DETECTOR
SUPPLY REGISTER
UNDERCABINET STRIP LIGHT
4" RECESSED LED
OUTDOOR SCONCE
VANITY SCONCE
4" EXHAUST FAN: DUCT TERMINATION SHALL BE 3 FEET FROM OPENINGS INTO THE BUILDING PER CMC 502.2.

WALL LEGEND

NEW WALL W1 SEE 3/A4.1 W2 SEE 4/A4.1

FLOOR LEGEND

PAVING
LUXURY VINYL PLANK
DECKING
TILE FLOORING

WINDOW LEGEND

TYPE NUMBER

DOOR LEGEND

NUMBER

DESIGN EVEREST
CONSULTING ENGINEERS
365 FLOWER LANE
MOUNTAIN VIEW, CA 94043
PHONE: (888) 311-3015 FAX: (650) 695-1801

2387 MATTOS DRIVE
ADU BUILDING PERMIT

REMARKS

REV	DATE	
0	02.14.2023	BUILDING PERMIT
1	05.13.2023	REVISION 1
2	07.24.2023	REVISION 2
3	10.04.2023	REVISION 3

LICENSED ARCHITECT
NATHAN CONRAD
C36505
5-31-2025
STATE OF CALIFORNIA

SIGN DATE:
DATE:
SCALE:
DRAWN BY: NC
CKD BY: NC
PROJECT#: 202212048

A3.1
ELEVATIONS / SECTIONS

HEAT PUMP OUTDOOR UNITS

LENNOX

RESIDENTIAL
PRODUCT SPECIFICATIONS

ML16XP1
Merit® Series
R-410A - 60 Hz

Bulletin No. 210681
November 2020
Supersedes June 2020

MERIT® SERIES

LENNOX QUANTUM® COIL

ENERGY STAR

SEER up to 17.00
HSPF up to 9.80
1.5 to 5 Tons

Cooling Capacity - 18,000 to 58,500 Btuh
Heating Capacity - 16,900 to 56,000 Btuh

MODEL NUMBER IDENTIFICATION

ML 16 X P 1 - 036 - 230 A 01

- Product Tier: ML = Merit® Series
- Nominal SEER
- Refrigerant Type: X = R-410A
- Unit Type: P = Heat Pump Outdoor Unit
- Cooling Stages: 1 = Single Stage Compressor
- Nominal Cooling Capacity: 018 = 1.5 tons; 024 = 2 tons; 030 = 2.5 tons; 036 = 3 tons; 042 = 3.5 tons; 048 = 4 tons; 060 = 5 tons
- Voltage: 230 = 208/230/1 phase-60Hz
- Kalirap Revision Level
- Revision Level

HEAT PUMP SPEC 12

LENNOX Service Literature

UNIT INFORMATION
Corp. 1701-L3
May 2017

CBA27UHE

Elite® Series CBA27UHE Units

IT IS HIGHLY RECOMMENDED IF THE AIR HANDLER IS INSTALLED IN A UNCONDITIONED SPACE THAT A CIRCUIT BREAKER COVER (ORDERED SEPARATELY) IS USED. ORDER LENNOX CATALOG # 82W01.

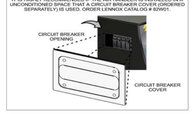

⚠ WARNING

Improper installation, adjustment, alteration, service or maintenance can cause personal injury, loss of life, or damage to property.

Installation and service must be performed by a licensed professional installer (or equivalent) or a service agency.

⚠ CAUTION

As with any mechanical equipment, contact with sharp sheet metal edges can result in personal injury. Take care while handling this equipment and wear gloves and protective clothing.

Table of Contents

Specifications / Electrical Data ..... Page 2
Blower Data ..... Page 4
Parts Arrangement ..... Page 6
I Application ..... Page 7
II Unit Components ..... Page 7
III Optional Electric Heat ..... Page 9
IV Start Up ..... Page 28
V Typical Operating Characteristics .. Page 28
VI Maintenance ..... Page 29
VII Wiring Diagrams and Sequence of Operations ..... Page 32

The Elite CBA27UHE units are high efficiency blower coils featuring **an all-aluminum coil**. Several models are available in sizes ranging from 1-1/2 through 5 tons (5.3 through 17.6 kW). The CBA27UHE is an upflow horizontal unit designed for HCFC-410A refrigerant. See unit installation instructions for more detail. A kit is available for downflow applications. CBA27UHE units come with a factory-installed check / expansion valve for cooling or heat pump applications.

CBA27UHE series units are designed to be matched with 14 SEER air conditioner or heat pump units. While these blower coil units are designed to be primarily matched with these outdoor units, they may be matched with other air conditioners or heat pumps as noted in the rating information.

ECB29 electric heat, in several voltages and kW sizes, can be field installed in the CBA27UHE cabinets.

Information contained in this manual is intended for use by experienced HVAC service technicians only. All specifications are subject to change. Procedures outlined in this manual are presented as a recommendation only and do not supersede or replace local or state codes.

IMPORTANT: Special procedures are required for cleaning the aluminum coil in this unit. See page 29 in this manual for information.

Page 1

© 2017 Lennox Industries Inc.

INDOOR AIR HANDLER SPEC 11

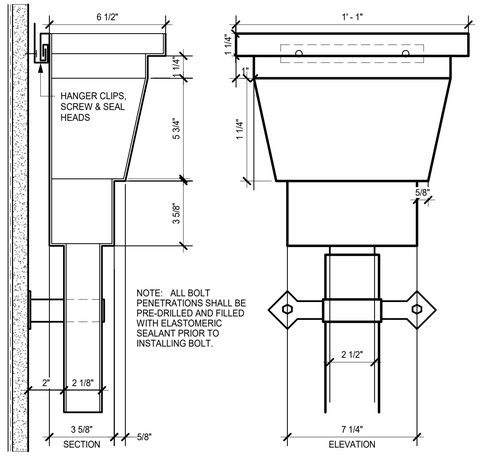

RWL COLLECTOR DETAIL 8

3" = 1'-0"

ROOF MATERIAL —
GAF ASPHALT SHINGLES: ICC ESR-1475 W/ GAF "SHILDGLE-MATE" UNDERLAYMENT THAT MEETS PHYSICAL REQUIREMENTS OF ASTM D226, TYPE II, ASTM D4869 AND IS UL CLASSIFIED

ROOF SHEATHING —
TYPICAL ROOF SHEATHING 5/8" CDX PLYWOOD, UNBLOCKED (P.I. = 32/16) 10D NAILS AT 6/6/12, S.S.D

ROOF RAFTERS —
2" X 10" WOOD FRAMING AT 16" O.C., S.S.D.

BATTS AND BLANKETS* —
GLASS FIBER OR MINERAL WOOL INSULATION BEARING THE UL CLASSIFICATION MARKING AS TO SURFACE BURNING CHARACTERISTICS AND/OR FIRE RESISTANCE. INSULATION SHALL BE A MAX OF 3-1/2 IN. THICK AND SHALL BE SECURED AGAINST THE UNDERSIDE OF THE SUBFLOORING WITH STAPLES SPACED 24 IN. OC AND PLACED DOWN THE CENTER OF THE BATT.

CEILING FRAMING MEMBERS —
S.S.D.

GYPSUM BOARD* —
NOM 1/2 IN. THICK, 48 IN. WIDE GYPSUM BOARD. GYPSUM BOARD INSTALLED WITH LONG DIMENSION PERPENDICULAR TO RESILIENT CHANNELS AND SIDE EDGES LOCATED BETWEEN JOISTS. SECURED WITH 1-1/8 IN. LONG BUGLE HEAD, HIGH-LOW THREAD STEEL SCREWS SPACED MAX 12 IN. OC. END JOINTS OF GYPSUM BOARD SIMILARLY FASTENED TO ADDITIONAL RESILIENT CHANNELS POSITIONED AT END JOINT LOCATIONS. SCREWS SHALL BE SPACED 2 IN. FROM END JOINTS AND 1 IN. FROM SIDE JOINTS. ADJACENT END JOINTS STAGGERED MIN 72 IN. (PABCO BUILDING PRODUCTS L L C, DBA PABCO GYPSUM — TYPE PG-13.)

FINISHING SYSTEM —
PAPER TAPE EMBEDDED IN JOINT COMPOUND OVER JOINTS AND COVERED WITH 2 LAYERS OF COMPOUND WITH EDGES FEATHERED OUT. GYPSUM BOARD SCREW HEADS COVERED WITH 2 LAYERS OF COMPOUND.

CAULKING AND SEALANTS —
A BEAD OF ACOUSTICAL SEALANT APPLIED AROUND THE PARTITION PERIMETER FOR SOUND CONTROL.

* INDICATES SUCH PRODUCTS SHALL BEAR THE UL CERTIFICATION MARK

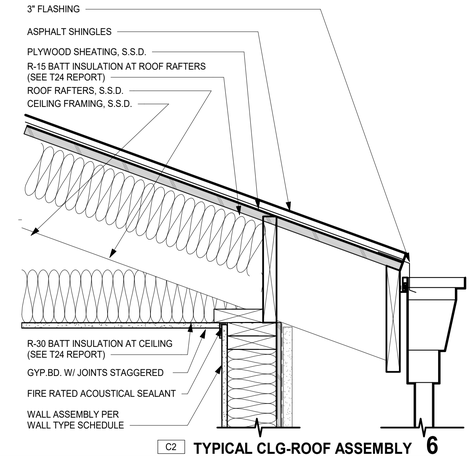

C2 **TYPICAL CLG-ROOF ASSEMBLY 6**

1 1/2" = 1'-0"

SHEATHING —
3/4" CDX T&G PLYWOOD, GLUENAILED (P.I. = 48/24) 10d NAILS at 6/6/10, S.S.D.

JOISTS —
2" X 12" WOOD FRAMING AT 16" O.C., S.S.D.

RESILIENT CHANNELS —
FORMED FROM MIN 25 MSG GALV STEEL SPACED MAX 24 IN. OC PERPENDICULAR TO JOISTS. ADDITIONAL RESILIENT CHANNELS USED AT BUTT JOINTS AND EXTEND MINIMUM 1 JOIST CAVITY AT EACH EDGE OF THE GYPSUM BOARD.

FRAMING MEMBERS* —
A RESILIENT SOUND ISOLATION ACCESSORY SHALL BE USED AT EACH ATTACHMENT POINT OF THE RESILIENT CHANNELS AND SPACED MAX 16 IN. O.C. CHANNEL ENDS BUTTED AND CENTERED UNDER THE JOISTS AND ATTACHED TO THE JOISTS WITH ONE ACCESSORY AT EACH END. ADDITIONAL ACCESSORIES USED TO HOLD RESILIENT CHANNELS THAT SUPPORT THE GYPSUM BOARD END JOINTS. THE ACCESSORY ENVELOPS THE MOUNTING EDGE OF THE RESILIENT CHANNEL. THE ACCESSORY AND RESILIENT CHANNEL ARE FASTENED TO THE JOISTS WITH THE SCREWS SUPPLIED WITH THE ACCESSORY AND PER THE ACCESSORY MANUFACTURER'S INSTALLATION INSTRUCTIONS. (PRODUCT SHALL BEAR THE UL CERTIFICATION MARK) (ACOUSTIC PROPERTIES L L C — TYPES RC-1 BOOST, RC BOOST DELUXE C-D.)

GYPSUM BOARD* —
NOM 1/2 IN. THICK, 48 IN. WIDE GYPSUM BOARD. GYPSUM BOARD INSTALLED WITH LONG DIMENSION PERPENDICULAR TO RESILIENT CHANNELS AND SIDE EDGES LOCATED BETWEEN JOISTS. SECURED WITH 1-1/8 IN. LONG BUGLE HEAD, HIGH-LOW THREAD STEEL SCREWS SPACED MAX 12 IN. OC. END JOINTS OF GYPSUM BOARD SIMILARLY FASTENED TO ADDITIONAL RESILIENT CHANNELS POSITIONED AT END JOINT LOCATIONS. SCREWS SHALL BE SPACED 2 IN. FROM END JOINTS AND 1 IN. FROM SIDE JOINTS. ADJACENT END JOINTS STAGGERED MIN 72 IN. (PABCO BUILDING PRODUCTS L L C, DBA PABCO GYPSUM — TYPE PG-13.)

FINISHING SYSTEM —
PAPER TAPE EMBEDDED IN JOINT COMPOUND OVER JOINTS AND COVERED WITH 2 LAYERS OF COMPOUND WITH EDGES FEATHERED OUT. GYPSUM BOARD SCREW HEADS COVERED WITH 2 LAYERS OF COMPOUND.

CAULKING AND SEALANTS —
A BEAD OF ACOUSTICAL SEALANT APPLIED AROUND THE PARTITION PERIMETER FOR SOUND CONTROL.

* INDICATES SUCH PRODUCTS SHALL BEAR THE UL CERTIFICATION MARK

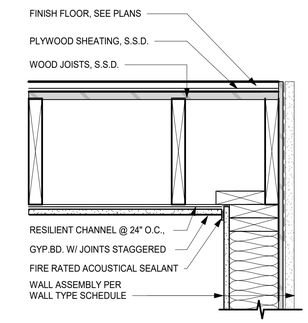

C1 **TYPICAL FLR-CLG ASSEMBLY 5**

1 1/2" = 1'-0"

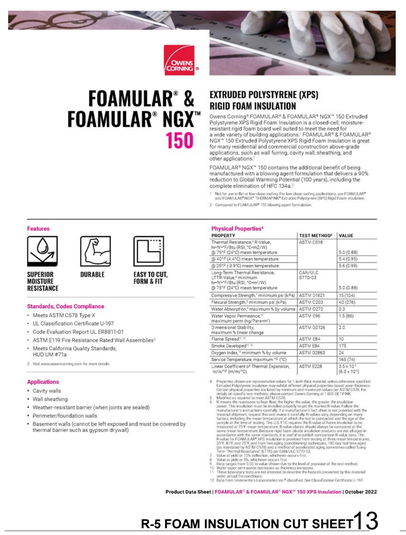

FOAMULAR® & FOAMULAR® NGX™ 150

EXTRUDED POLYSTYRENE (XPS) RIGID FOAM INSULATION

Owens Corning® FOAMULAR® & FOAMULAR® NGX™ 150 Extruded Polystyrene XPS Rigid Foam Insulation is a closed-cell, moisture-resistant rigid foam board well suited to meet the need for a wide variety of building applications.[1] FOAMULAR® & FOAMULAR® NGX™ 150 Extruded Polystyrene XPS Rigid Foam Insulation is great for many residential and commercial construction above-grade applications, such as wall furring, cavity wall, sheathing, and other applications.[2]

FOAMULAR® NGX™ 150 contains the additional benefit of being manufactured with a blowing agent formulation that delivers a 90% reduction to Global Warming Potential (100 years), including the contribution from HFCs, vs. HCFC-142b.[3]

1 May be used in Manufactured Housing (MH). To be blue-tarping applicable, use FOAMULAR® and FOAMULAR® NGX™ THERMOPAR® Extruded Polystyrene (XPS) Rigid Foam Insulation.
2 Component to FOAMULAR® 150 blowing agent formulation.

Features

- SUPERIOR MOISTURE RESISTANCE
- DURABLE
- EASY TO CUT, FORM & FIT

Standards, Codes Compliance

- Meets ASTM C578 Type X
- UL Classification Certificate U-197
- Code Evaluation Report UL ER8811-01
- ASTM E119 Fire Resistance Rated Wall Assemblies[1]
- Meets California Quality Standards; HUD UM #71a

3 Visit www.owenscorning.com for more details.

Applications

- Cavity walls
- Wall sheathing
- Weather-resistant barrier (when joints are sealed)
- Perimeter/foundation walls
- Basement walls (cannot be left exposed and must be covered by thermal barrier such as gypsum drywall)

Physical Properties[4]

PROPERTY	TEST METHOD[5]	VALUE
Thermal Resistance,[6] R-Value, ft²h°F/(Btu)[8], °C·m2/W) @ 75°F (24°C) mean temperature	ASTM C518	5.0 (0.88)
@ 40°F (4.4°C) mean temperature		5.4 (0.95)
@ 25°F (-3.9°C) mean temperature		5.6 (0.99)
Long-Term Thermal Resistance, R-Value, ft²h°F/(Btu)[8], °C·m2/W) @ 75°F (24°C) mean temperature	CAN/ULC 770-03	5.0 (0.88)
Compressive Strength,[7] minimum psi (kPa)	ASTM D1621	15(104)
Flexural Strength,[7] minimum psi (kPa)	ASTM C203	40 (276)
Water Absorption,[7] maximum % by volume	ASTM C272	0.3
Water Vapor Permeance,[7] maximum perm (ng/Pa·sm²)	ASTM D1653	1.5 (86)
Dimensional Stability,[7] maximum % linear change	ASTM D2126	2.0
Flame Spread[7,10]	ASTM E84	10
Smoke Developed[7,10]	ASTM E84	175
Oxygen Index,[7] minimum % by volume	ASTM D2863	24
Service Temperature, maximum °F (°C)		165 (74)
Linear Coefficient of Thermal Expansion, in/in/°F (mm/m/°C)	ASTM D696	3.5 x 10⁻⁵ (6.3 x 10⁻⁵)

4 Properties shown are representative values for 1-inch thick material, unless otherwise specified. Extruded Polystyrene insulation may exhibit different physical properties based upon thickness, density, and other factors. Contact Owens Corning for more information. Unless otherwise specified, values are based on test methods, above contact Owens Corning at 1-800-GET-FIBR.
5 Test methods are subject to revision.
6 R means the resistance to heat flow; the higher the value, the greater the insulation power. The insulation must be installed properly to get the marked R-value. Follow the manufacturer's recommendations for installation to achieve the R-value at time of installation. The material (thickness, density) and meter it carefully. R-values vary, depending on many factors, including the mean temperature at which the test is conducted and the age of the material. The R-value of XPS, at 1 in. (25 mm) thickness, 75°F (24°C) mean temperature, is measured at 25°F mean temperature. R-value claims should always be expressed at the temperature at which they are measured. Thermal resistance is measured in accordance with the same standard, or as used as a product component R-value claim. The R-value of XPS, at 1 in. (25 mm) thickness, 40°F (4.4°C) mean temperature, is 5.4 (0.95). Long-term (25 YEAR) and 75°F, per 1 inch, two-surface (overdriveing) methodses, 180 days real time aged (as measured by ASTM C518) and a method of accelerated aging, sometimes called "Long Term Thermal Resistance" (LTTR) or "Aged R-Value" (ARV).
7 Value or yield or 10% deflection, whichever occurs first.
8 Thickness, density, and other factors affect R-value.
9 Some ranges from 0.00 to value shown due to the benefit of precision of the test method, which is dependent on the material being tested and its thickness.
10 These flammable tests are not intended to describe the hazards presented by this material under actual fire conditions.
12 Data from Underwriters Laboratories Inc.® described. See Classification Certificate U-197.

Product Data Sheet | FOAMULAR® & FOAMULAR® NGX™ 150 XPS Insulation | October 2022

R-5 FOAM INSULATION CUT SHEET 13

O'HAGIN
THE TECHNOLOGICAL LEADER IN ATTIC VENTILATION

1. SELECT METAL

Standard:
26 Gauge, G-90 Galvanized Steel
20 Year Warranty

Upgrade Options:
.032" Aluminum
50 Year Warranty
16 Oz. Copper
50 Year Warranty

2. SELECT FINISH

Upgrade Options:
Pre-Painted Galvanized Steel Finish*

BLACK | BROWN | CHARCOAL | GRAY | TERRA COTTA | WHITE

3. SELECT OPTIONS

Standard:
4" Flange

Upgrade Options:
6" Extended Flange
High Wind Diverter***

4. SELECT WIRE MESH

	NFVA**
Standard: 1/4" Galvanized	72.00 sq. in.
Upgrade Options: 1/4" Stainless Steel	72.00 sq. in.
FIRE & ICE WINNER OF 8 TOP PRODUCTS HOME & GARDEN REVIEW; TOP PRODUCT WINNER	72.00 sq. in.
1/8" Galvanized	64.80 sq. in.
1/8" Stainless Steel	64.80 sq. in.

* Colors may vary between lots, subject to increased lead times based on availability. ** Net Free Ventilation Area. Figures based on independent evaluation reports. *** Standard in Florida.

www.ohagin.com
210 Classic Court, Suite 100 • Rohnert Park, CA 94928
Toll Free 877-324-0444 • Fax 707-588-9187

MATERIAL: COMPOSITION SHINGLE
PRODUCT: LOW PROFILE (TAPERED)

MADE IN THE U.S.A. WITH U.S. PARTS

NFVA 72.00 sq. in.

UNIQUE LOW-PROFILE DESIGN FITS BELOW MOST ROOF MOUNTED SOLAR PANEL INSTALLATIONS

FREE VENT LAYOUT AND CALCULATIONS
Send us your plans.
No plans? No problem.
Provide us with your address and roofing material. We'll figure out the rest. vent@ohagin.com

WATCH OUR INSTALL VIDEOS
Scan this QR Code with your smart phone to watch easy step-by-step install videos.

If you live in a Wildland Urban Interface area (WUI), upgrade to our FIRE&ICE® product line. Scan theQR Codes below with your smart phone to learn more.

LOCAL AND NATIONAL APPROVALS
O'Hagin is a recognized leader in attic ventilation testing and design.

O'HAGIN IS PROUD TO WORK WITH THESE AND MANY OTHER QUALITY MANUFACTURERS

O'Hagin vents are manufactured and protected under one or more of the following patents: D456,531; D487,234; D498,991; D498,392; D449,889; D479,885; D504,172; D513,774; D549,316; 6,050,939; 6,129,628; 6,206,001; 6,390,914; 6,447,395; 6,491,219; 9,371,221. Other U.S. and Foreign patents are pending. ©2021 O'Hagin. All rights reserved.

OHAGIN VENT CUT SHEET 10

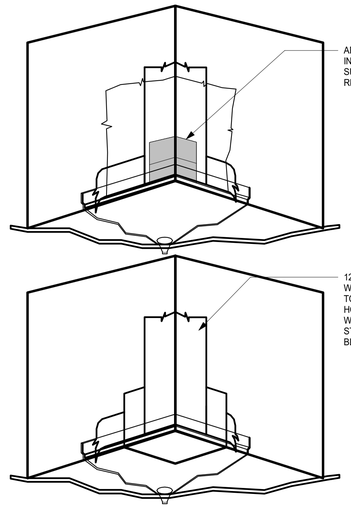

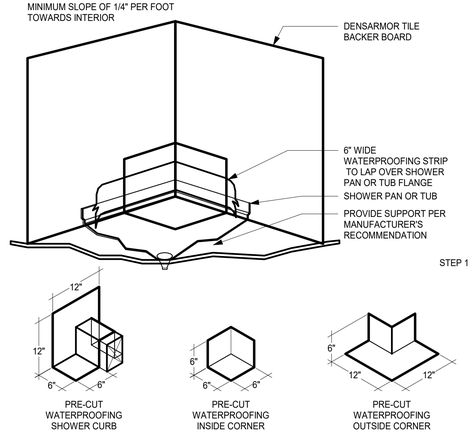

SHOWER (TUB SIMILAR) INSTALLATION SEQUENCE 7

1 1/2" = 1'-0"

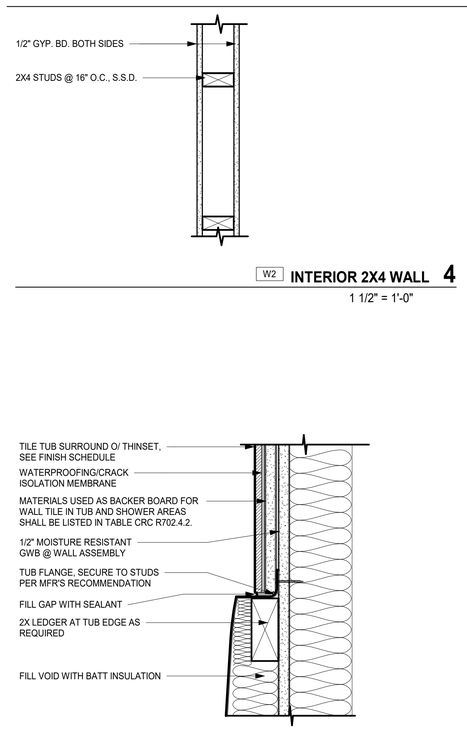

W2 **INTERIOR 2X4 WALL 4**

1 1/2" = 1'-0"

TUB SURROUND DETAIL AT FLANGE 2

3" = 1'-0"

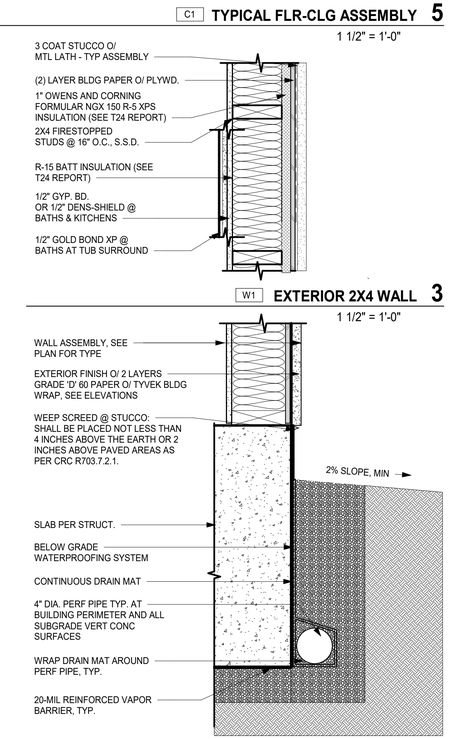

W1 **EXTERIOR 2X4 WALL 3**

1 1/2" = 1'-0"

TYPICAL FOOTING/FOUNDATION DRAINAGE 1

1 1/2" = 1'-0"

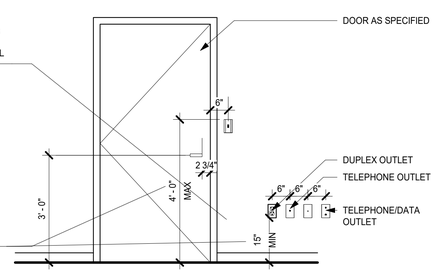

MOUNTING HEIGHTS 9

1/2" = 1'-0"

DESIGN EVEREST
CONSULTING ENGINEERS
365 FLOWER LANE
MOUNTAIN VIEW, CA 94043
PHONE: (888) 311-3015 FAX: (650) 695-1801

2387 MATTOS DRIVE
ADU BUILDING PERMIT

REMARKS

REV	DATE	REMARKS
0	02.14.2023	BUILDING PERMIT
1	05.13.2023	REVISION 1
2	07.24.2023	REVISION 2
3	10.04.2023	REVISION 3

LICENSED ARCHITECT
NATHAN CONRAD
C36505
5-31-2025
STATE OF CALIFORNIA

SIGN DATE:
DATE:
SCALE:
DRAWN BY: Author
CKD BY: Checker
PROJECT#: 202212048

A4.1
DETAILS

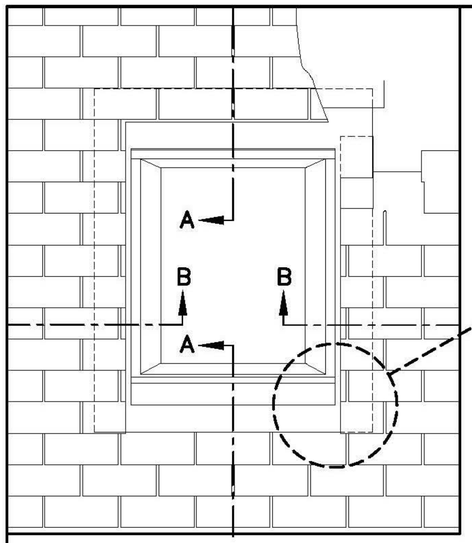

ELEVATION

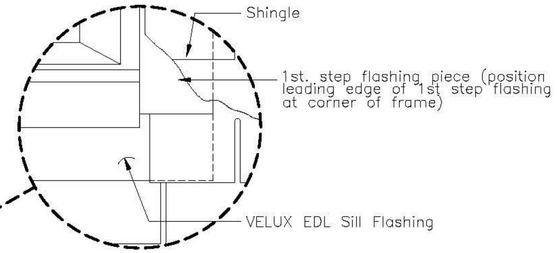

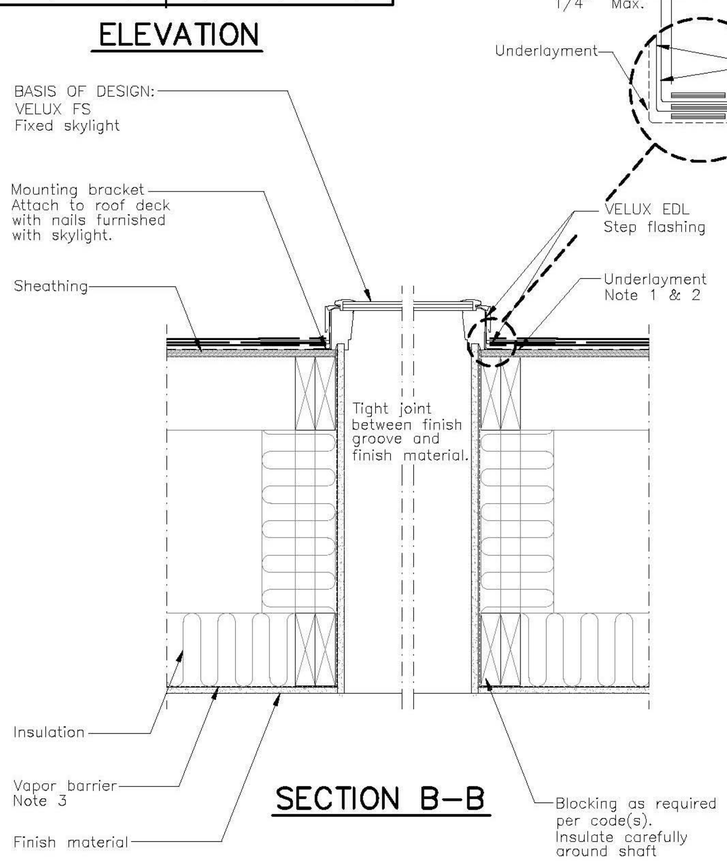

SECTION B–B

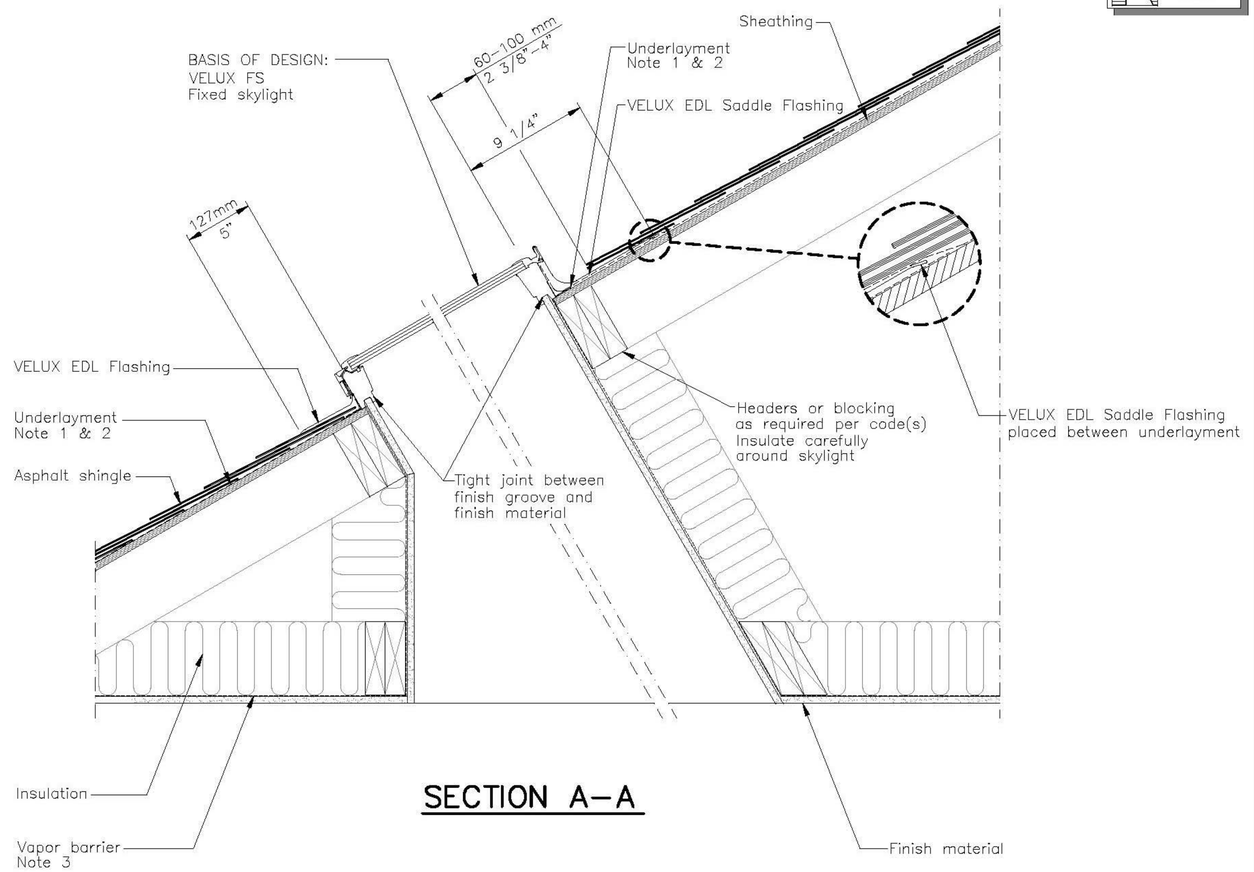

SECTION A–A

GENERAL NOTES

1. Wrap frame in adhesive underlayment provided with VELUX flashing. VELUX recommends use of VELUX type ZOZ 216 adhesive underlayment to wrap frame when not using VELUX flashings.
2. Underlayment to be folded up against all sides of frame.
3. Vapor barrier should be used to avoid moisture.

VELUX
Sky–Product Management

VELUX
1418 Evans Pond Road
Greenwood, SC 29649
1–800–88–VELUX
www.VELUXUSA.com

	Name	Date
Drawn by	JDH	July 2020
Checked by	WQ,CJ	Aug 2022
Drawing No.		

FS–Residential/Commercial Roof Section (Light Shaft and Asphalt Shingles)

FS–01–0720

This drawing is an instrument of service and is provided for informational use only.

© 2022 VELUX GROUP

® VELUX is a registered trademark

DESIGN EVEREST
CONSULTING ENGINEERS
365 FLOWER LANE
MOUNTAIN VIEW, CA 94043
PHONE: (888) 311-3015 FAX: (650) 695-1801

2387 MATTOS DRIVE
ADU BUILDING PERMIT

REV	DATE	REMARKS
0	02.14.2023	BUILDING PERMIT
1	05.13.2023	REVISION 1
2	07.24.2023	REVISION 2
3	10.04.2023	REVISION 3

LICENSED ARCHITECT
NATHAN CONRAD
C36505
5-31-2025
STATE OF CALIFORNIA

SIGN DATE:
DATE:
SCALE:
DRAWN BY: Author
CKD BY: Checker
PROJECT#: 202212048

A4.2
SKYLIGHT DETAILS

GENERAL NOTES

1 ALL MATERIAL AND WORKMANSHIP SHALL CONFORM TO THE DRAWINGS AND SPECIFICATIONS.

2 DURING THE CONSTRUCTION PERIOD, THE CONTRACTOR SHALL BE RESPONSIBLE FOR THE SAFETY OF THE BUILDING. THE CONTRACTOR SHALL PROVIDE ADEQUATE SHORING, BRACING AND GUYS IN ACCORDANCE WITH ALL NATIONAL, STATE, AND LOCAL SAFETY PROVISIONS. ANY DEVIATION MUST BE APPROVED PRIOR TO ERECTION.

3 DRAWINGS INDICATE GENERAL AND TYPICAL DETAILS OF CONSTRUCTION. WHERE CONDITIONS ARE NOT SPECIFICALLY INDICATED BUT ARE OF SIMILAR CHARACTER TO DETAILS SHOWN, SIMILAR DETAILS OF CONSTRUCTION SHALL BE USED SUBJECT TO REVIEW BY THE ARCHITECT.

4 ALL DETAILS DESIGNATED AS STANDARD OR TYPICAL SHALL OCCUR IN ADDITION TO ANY OTHER SPECIFIC DETAIL CALLED OUT.

5 ALL INFORMATION SHOWN ON THE DRAWINGS RELATIVE TO EXISTING CONDITIONS IS GIVEN AS THE BEST PRESENT KNOWLEDGE, BUT WITHOUT GUARANTEE OF ACCURACY. WHERE ACTUAL CONDITIONS CONFLICT WITH THE DRAWINGS, THEY SHALL BE REPORTED TO THE ARCHITECT SO THAT THE PROPER REVISIONS MAY BE MADE. MODIFICATION OF DETAILS OF CONSTRUCTION SHALL NOT BE MADE WITHOUT WRITTEN APPROVAL OF THE ARCHITECT.

6 STRUCTURAL DRAWINGS SHALL BE USED IN CONJUNCTION WITH ARCHITECTURAL DRAWINGS. CONTRACTOR SHALL VERIFY ALL DIMENSIONS, ELEVATIONS, & SITE CONDITIONS PRIOR TO THE START OF CONSTRUCTION. ALL DIMENSIONS SHALL COME FROM ARCHITECTURAL DRAWINGS, DO NOT SCALE DRAWINGS

STATEMENT OF SPECIAL INSPECTION

SPECIAL INSPECTION IS REQUIRED PER THE 2021 IBC/2022 CBC, SECTION 1704, FOR THE FOLLOWING:

1 PERIODIC INSPECTION IS REQUIRED FOR THE FOLLOWING:
A. NAILING, BOLTING AND ANCHORING OF PLYWOOD SHEAR WALL TYPES B, C, AND D PER THE SHEAR WALL SCHEDULE.

2 STRUCTURAL TESTING IS REQUIRED FOR THE FOLLOWING:
A. REINFORCING STEEL: CERTIFIED MILL TESTS SHALL BE PROVIDED FOR EACH SHIPMENT. WHERE WELDING IS SPECIFIED, A CHEMICAL TEST SHALL BE PERFORMED TO DETERMINE WELDABILITY.

3 EACH CONTRACTOR RESPONSIBLE FOR THE CONSTRUCTION OF THE MAIN WIND OR SEISMIC FORCE RESISTING SYSTEM, DESIGNATED SEISMIC SYSTEM OR A WIND OR SEISMIC RESISTING COMPONENT LISTED ABOVE SHALL SUBMIT A WRITTEN STATEMENT OF RESPONSIBILITY TO THE BUILDING OFFICIAL AND THE OWNER PRIOR TO THE COMMENCEMENT OF WORK ON THE SYSTEM OR COMPONENT. THE CONTRACTOR'S STATEMENT SHALL CONTAIN THE FOLLOWING:
(1) ACKNOWLEDGMENT OF AWARENESS OF THE SPECIAL REQUIREMENTS CONTAINED IN THE STATEMENT OF SPECIAL INSPECTION.
(2) ACKNOWLEDGMENT THAT CONTROL WILL BE EXERCISED TO OBTAIN CONFORMANCE WITH THE CONSTRUCTION DOCUMENTS APPROVED BY THE BUILDING OFFICIAL.
(3) PROCEDURES FOR EXERCISING CONTROL WITHIN THE CONTRACTOR'S ORGANIZATION, THE METHOD AND FREQUENCY OF REPORTING AND THE DISTRIBUTION OF THE REPORTS.
(4) IDENTIFICATION AND QUALIFICATION OF THE PERSON(S) EXERCISING SUCH CONTROL AND THEIR POSITION(S) IN THE ORGANIZATION.

4 ALL SPECIAL INSPECTORS SHALL BE HIRED DIRECTLY BY THE PROJECT OWNER AND SHALL BE LICENSED TO PERFORM THE APPLICABLE INSPECTIONS.

5 ALL INSPECTION REPORTS SHALL BE SUBMITTED TO THE BUILDING OFFICIAL WITHIN 30 DAYS OF THE DATE OF THE INSPECTION.

FOUNDATIONS

1 SINCE NO FOUNDATION REPORT EXISTS, THE FOUNDATION DESIGN IS BASED ON THE FOLLOWING CRITERIA:

BEARING PRESSURE	1500 PSF	18" INTO NAT. SOIL
PASSIVE PRESSURE	100 PCF	MAX. 1000 PSF
FRICTION COEFF	0.25	

IF ADVERSE SOIL CONDITIONS ARE ENCOUNTERED, A SOILS INVESTIGATION REPORT WILL BE REQUIRED.

2 VERTICAL EXCAVATIONS IN SOIL SHALL BE LIMITED TO 5 FEET. VERTICAL CUTS IN EXCESS OF 5 FT SHALL BE CUT BACK AT 1:1 SLOPE. WHERE IT IS IMPOSSIBLE TO SLOPE AT 1:1, A SOILS REPORT WILL BE REQUIRED TO SPECIFY A SLOT CUT OR SHORING PROCEDURE.

3 MINIMUM SLAB ON GRADE CONSTRUCTION UNLESS NOTED OTHERWISE ON THE PLANS SHALL BE 4 INCH CONCRETE REINFORCED WITH #4 at 16"o.c. OVER 15 mil VISQUEEN, CONFORMING TO ASTM E 1745 OVER 4 INCHES BASE OF 1/2" MIN. CLEAN AGGREGATE. THE BUILDING FLOOR SLAB SHALL BE SUPPORTED ON COMPACTED GRADE, BEDROCK, OR APPROVED SOIL.

4 IF TRENCHES OR EXCAVATIONS OF 5' OR MORE IN WHICH A PERSON MUST DESCEND, ARE REQUIRED, A PERMIT MUST BE OBTAINED FROM THE CALIFORNIA DIVISION OF INDUSTRIAL SAFETY PRIOR TO THE ISSUANCE OF A BUILDING OR GRADING PERMIT.

FRAMING LUMBER

1 ALL STRUCTURAL LUMBER SHALL BE DOUGLAS FIR OF THE FOLLOWING GRADES, CONFORMING TO STANDARD GRADING RULES FOR WEST COAST LUMBER, NO. 16, WITH A MAXIMUM MOISTURE CONTENT OF 19% UNLESS NOTED OTHERWISE:

RAFTERS, JOISTS, PLATES	NO. 2
2x AND 4x BEAMS, STRINGERS, AND HEADERS	NO. 2
6x AND 8x BEAMS, STRINGERS, AND HEADERS	NO. 1
POSTS AND TIMBERS	NO. 1
STUDS	CONST. GRADE
BLOCKING, AND STRIPPING	STUD GRADE.

2 PLYWOOD FOR ROOF SHEATHING SHALL BE CDX, UNLESS NOTED OTHERWISE. USE EXTERIOR TYPE, MINIMUM C–C GRADE, WHERE PLYWOOD IS EXPOSED TO WEATHER. PLYWOOD FOR FLOOR SHEATHING SHALL BE CDX, UNLESS NOTED OTHERWISE. ALL PLYWOOD SHALL CONFORM TO U.S. PRODUCT STANDARD PS 1–95. EACH SHEET OF PLYWOOD SHALL BE IDENTIFIED BY A REGISTERED STAMP OR BRAND OF THE DOUGLAS FIR PLYWOOD ASSOCIATION.

3 ALL WOOD BEARING ON CONCRETE SHALL BE PRESSURE TREATED DOUGLAS FIR.

4 STUDS OVER 10 FEET IN HEIGHT OR SUPPORTING 2 FLOORS AND A ROOF MUST BE 2x6's AT 16" o.c. UNLESS NOTED OTHERWISE. FOR STUDS GREATER THAN 16 FEET, SEE PLAN. STUDS IN CRIPPLE WALLS LESS THAN 4 FEET IN HEIGHT MAY MATCH THE STUDS ABOVE.

5 PROVIDE 2x SOLID BLOCKING BETWEEN JOISTS AND RAFTERS AT ALL SUPPORTS. BLOCKING SHALL BE ONE PIECE AND BE THE FULL DEPTH OF THE JOIST OR RAFTER.

6 PROVIDE JOISTS UNDER PARTITIONS WHICH ARE PARALLEL TO THE JOISTS. PROVIDE SOLID, FULL BLOCKING UNDER PARTITIONS WHICH ARE PERPENDICULAR TO THE JOISTS.

7 TOP PLATE OF ALL STUD WALLS SHALL BE TWO PIECES THE SAME SIZE AS THE STUDS. SPLICES ARE TO LAP 4'–0" MINIMUM AND BE NAILED WITH 12 16d NAILS MINIMUM EACH SIDE OF JOINT.

8 ALL NAILS SHALL BE COMMON, BOX OR SINKER. NAILING SHALL BE PER CHAPTER 23 OF THE 2021 IBC/2022 CBC. PLEASE SEE 8/S–4.0

9 BOLT HOLES IN WOOD SHALL BE 1/32" TO 1/16" LARGER THAN THE NOMINAL BOLT DIAMETER. ALL BOLTS SHALL HAVE STANDARD CUT WASHER UNDER HEAD AND NUT UNLESS NOTED OTHERWISE.

10 ALL BOLTS SHALL BE RETIGHTENED PRIOR TO THE APPLICATION OF SHEATHING, PLASTER, ETC.

11 STRUCTURAL MEMBERS SHALL NOT BE CUT FOR PIPES, ETC. UNLESS SPECIFICALLY DETAILED.

12 WOOD STUDS MAY BE NOTCHED TO A DEPTH OF 25% OF THE WIDTH MAXIMUM, EXCEPT INTERIOR NONBEARING STUDS WHICH MAY BE NOTCHED TO 40% OF THE WIDTH MAXIMUM. STUDS MAY BE BORED TO 40% OF THE WIDTH MAXIMUM, EXCEPT INTERIOR NONBEARING STUDS AND DOUBLED BEARING STUDS (PROVIDED NO MORE THAN TWO SUCCESSIVE DOUBLED STUDS ARE BORED) WHICH MAY BE BORED TO 60% OF THE WIDTH MAXIMUM. BORED HOLES SHALL NOT BE LOCATED AT THE SAME SECTION OF A STUD AS A CUT OR NOTCH. IN NO CASE SHALL THE EDGE OF A BORED HOLE BE NEARER THAN 5/8" TO THE EDGE OF THE STUD.

13 PROVIDE FIRE STOPS AT ALL INTERSECTIONS OF STUD WALLS AT FLOOR, CEILING, AND ROOF. FIRE STOPS SHALL BE 2x NOMINAL THICKNESS OF WOOD AND SHALL BE THE FULL WIDTH OF THE ENCLOSED SPACE. PLACE FIRE STOPS AT A MAXIMUM SPACING OF 8'–0" IN EACH DIRECTION AND AT THE SAME LINES AS THE FIRE STOPS IN ADJACENT WALLS.

14 NAILS OR OTHER FASTENERS CONNECTING TO P.T. LUMBER MUST BE HOT DIPPED ZINC COATED GALVANIZED STEEL OR STAINLESS STEEL

MANUFACTURER LUMBER

1 TJI ALL PLYWOOD WEB JOISTS SPECIFIED ARE MANUFACTURED BY WEYERHAEUSER. LARR #25538, ICC–ESR #1153.

2 TJL ALL OPEN WEB JOISTS SPECIFIED ARE MANUFACTURED BY WEYERHAEUSER. LARR #22614, ICC–ESR #1774.

3 MICROLLAM LVL ALL MICROLLAMS SPECIFIED ARE MANUFACTURED BY WEYERHAEUSER. LARR #25202, ICC–ESR #1387.

4 PARALLAM PSL ALL PARALLAMS SPECIFIED ARE MANUFACTURED BY WEYERHAEUSER. LARR #25202, ICC–ESR #1387.

5 TIMBERSTRAND LSL ALL TIMBERSTRAND MEMBERS SPECIFIED ARE MANUFACTURED BY WEYERHAEUSER. LARR #25202, ICC–ESR #1387.

6 ALTERNATE MANUFACTURERS MAY BE USED SUBJECT TO THE APPROVAL OF THE ARCHITECT AND THE ENGINEER. THE CONTRACTOR SHALL PROVIDE ALL NECESSARY INFORMATION TO THE ARCHITECT AND ENGINEER FOR APPROVAL.

LOAD CRITERIA

(DL: dead load; LL: live load)

ROOF	DL: 20 psf	LL: 20 psf
FLOOR	DL: 15 psf	LL: 40 psf

CONCRETE

1 ALL CONCRETE, UNLESS NOTED OTHERWISE, SHALL BE REGULAR WEIGHT, HARD ROCK TYPE (150 PCF). AGGREGATES SHALL CONFORM TO ASTM C33 WITH PROVEN SHRINKAGE CHARACTERISTICS OF LESS THAN 0.05%.

2 ULTIMATE COMPRESSIVE STRENGTHS AT 28 DAYS SHALL BE:

SLAB ON GRADE	2500 PSI	CONTINUOUS FTGS	2500 PSI
PAD FOOTINGS	2500 PSI	RETAINING WALLS	2500 PSI
GRADE BEAMS	3000 PSI	CAISSONS/PILES	3000 PSI

3 CEMENT SHALL CONFORM TO ASTM C150, TYPE II.

4 PLACEMENT OF CONCRETE SHALL CONFORM WITH THE REQUIREMENTS OF ACI 301.

5 CONCRETE SHALL BE MAINTAINED IN A MOIST CONDITION FOR A MINIMUM OF (5) FIVE DAYS AFTER PLACEMENT. ALTERNATE METHODS WILL BE APPROVED IF SATISFACTORY PERFORMANCE CAN BE ASSURED.

6 KEYED CONSTRUCTION JOINTS SHALL BE USED IN ALL CASES. ALL LAITANCE SHALL BE REMOVED. ALL VERTICAL JOINTS SHALL BE THOROUGHLY WETTED AND SLUSHED WITH A COAT OF NEAT CEMENT IMMEDIATELY BEFORE PLACING NEW CONCRETE.

7 ALL CONCRETE WITH A DESIGNATED STRENGTH GREATER THAN 2500 PSI SHALL REQUIRE CONTINUOUS INSPECTION BY AN INSPECTOR APPROVED BY THE BUILDING DEPARTMENT AND THE ARCHITECT.

8 MINIMUM CONCRETE COVERAGE OF REINFORCING STEEL SHALL BE AS FOLLOWS:

CONCRETE CAST AGAINST AND PERMANENTLY EXPOSED TO SOIL ... 3"

CONCRETE EXPOSED TO SOIL OR WEATHER:
#5 BARS, W31 OR D31 WIRES, AND SMALLER ..... 1½"
#6 BARS AND LARGER ..... 2"

CONCRETE NOT EXPOSED TO WEATHER OR IN CONTACT WITH SOIL:
SLABS, WALLS AND JOISTS:
#11 BARS AND SMALLER ..... 3/4"
#14 BARS AND LARGER ..... 1½"

BEAMS AND COLUMNS ..... 1½"

9 PIPES OTHER THAN ELECTRICAL CONDUITS SHALL NOT BE EMBEDDED IN STRUCTURAL CONCRETE EXCEPT WHERE SPECIFICALLY APPROVED.

10 BEFORE NEW CONCRETE IS DEPOSITED ON OR AGAINST CONCRETE WHICH IS SET, THE SURFACE OF THE SET CONCRETE SHALL BE ROUGHENED SUFFICIENTLY TO EXPOSE THE AGGREGATE APPROXIMATELY 1/4" AND CLEANED. USE EPOXY WHERE REQUIRED.

11 EXPANSION BOLTS SHALL BE HILTI "KWIK TZ" BOLTS; LARR #25701, ICC–ESR #1917.

12 NON–SHRINK GROUT/DRYPACK MUST BE 6,000 PSI MIN. WITH CURRENT ICBO RESEARCH REPORT.

REINFORCING STEEL

1 ALL REINFORCING STEEL, DOWELS, AND TIES SHALL CONFORM TO ASTM A615, GRADE 60, UNLESS NOTED OTHERWISE. #3 BARS SHALL BE ASTM A615, GRADE 40.

2 ALL REINFORCING STEEL SHALL BE LAPPED AS INDICATED ON THE DRAWINGS. WHERE LAPS AND/OR SPLICE LOCATIONS ARE NOT SPECIFICALLY INDICATED, VERIFY WITH THE ENGINEER IF A SPLICE CAN BE PROVIDED. ALL REINFORCING STEEL SHALL BE LAPPED WITH A CLASS "B" LAP UNLESS NOTED OTHERWISE. ALL SPLICE LOCATIONS SHALL BE SHOWN ON SHOP DRAWINGS AND APPROVED PRIOR TO FABRICATION.

3 WELDED WIRE FABRIC SHALL CONFORM TO ASTM A82 AND A185.

4 ALL REINFORCING STEEL IN MASONRY SHALL BE LAPPED 48 BAR DIAMETERS OR TWO (2) FEET MINIMUM, UNLESS NOTED OTHERWISE.

EPOXY ANCHORS

1 ALL EPOXY ANCHORS SPECIFIED ON THE PLANS SHALL BE BY ONE OF THE FOLLOWING MANUFACTURER'S AND SHOULD BE INSTALLED PER THE MANUFACTURER'S RECOMMENDATIONS:

A SIMPSON STRONG–TIE "SET–XP" STRUCTURAL EPOXY–TIE ANCHORING ADHESIVE
LARR# 25744, ICC–ESR# 2508

B HILTI "HIT–HY 150 MAX–SD" EPOXY ADHESIVE
LARR# 25881, ICC–ESR# 3013

2 CONTINUOUS SPECIAL INSPECTION BY A REGISTERED DEPUTY INSPECTOR IS REQUIRED FOR ALL EPOXY ANCHOR INSTALLATIONS.

EARTHQUAKE DESIGN DATA

IMPORTANCE FACTOR: 1.0
OCCUPANCY CATEGORY: II
SITE CLASS: ..... D
SPECTRAL RESPONSE COEFFICIENTS
Ss: 2.660
S1: 1.010
Sds: 1.860
Sd1: 1.390
SEISMIC DESIGN CATEGORY (SDC): ..... E
SEISMIC FORCE RESISTING SYSTEM: ..... PLYWOOD SHEAR WALLS
SEISMIC RESPONSE COEFFICIENT (Cs): 0.286
RESPONSE MODIFICATION FACTOR (R): 6.5
REDUNDANCY FACTOR: 1.3

WIND DESIGN

BASIC WIND SPEED: ..... 95 mph
WIND IMPORTANCE FACTOR: 1.0
WIND EXPOSURE: ..... B
INTERNAL PRESSURE COEFF.: ..... ±0.18
BUILDING DESIGN PRESSURE: ..... 16.7 psf
COMPONENT & CLADDING DESIGN PRESSURE: ..... 25.3 psf

DESIGN EVEREST
CONSULTING ENGINEERS
365 FLOWER LANE
MOUNTAIN VIEW, CA 94043
PHONE: (888) 311-3015 FAX: (650) 695-1801

GENERAL NOTES

MATTOS
2383 MATTOS DRIVE
MILPITAS, CALIFORNIA

REV	DATE	DESCRIPTION
1	'	'
2	'	'
3	'	'
4	'	'
5	'	'

REGISTERED PROFESSIONAL ENGINEER
JESSE LANDON
C 83060
Exp. 09-30-24
CIVIL
STATE OF CALIFORNIA

SIGN DATE:	08-24-2023
DATE:	AS NOTED
SCALE:	AS NOTED
DRAWN BY:	JL
CKD BY:	JL
PROJECT #:	202212048

S-1.0

GENERAL FOUNDATION NOTES

1 SEE ARCHITECTURAL DRAWINGS FOR ALL DIMENSIONS, SLAB DEPRESSIONS, CURBS AND ELEVATIONS.

2 BOLT HOLES FOR HOLDOWN CONNECTIONS TO WOOD POSTS SHALL BE DRILLED ONLY 1/16" LARGER THAN THE REQUIRED BOLT SIZE. INSPECTOR TO VERIFY. NUTS SHALL BE TORQUED AS REQUIRED BY THE MANUFACTURER OR 1/2" TURN PAST FINGER TIGHTNESS WHERE NOT OTHERWISE SPECIFIED.

3 PROVIDE APPROVED PLATE WASHERS PER THE PLATE WASHER SCHEDULE.

4 HOLDOWNS SHALL BE RE-TIGHTENED JUST PRIOR TO COVERING THE WALL FRAMING.

PLATE WASHER SCHEDULE [1]
SILL PLATE ANCHOR BOLTS AND HOLDOWN CONNECTOR BOLTS

BOLT SIZE	PLATE SIZE T x W x L	REMARKS
1/2" ø	1/4" x 3" x 3"	
5/8" ø	1/4" x 3" x 3"	
3/4" ø	5/16" x 3" x 3"	
7/8" ø	5/16" x 3" x 3"	
1" ø	3/8" x 3-1/2" x 3-1/2"	

NOTES:

1. APPROVED PLATE WASHERS, INSTEAD OF CUT WASHERS, SHALL BE PROVIDED FOR ALL PLYWOOD SHEAR WALL SILL PLATE ANCHOR BOLTS AND FOR ALL HOLDOWN CONNECTOR BOLTS AT SHEAR WALL WOOD FLANGES.

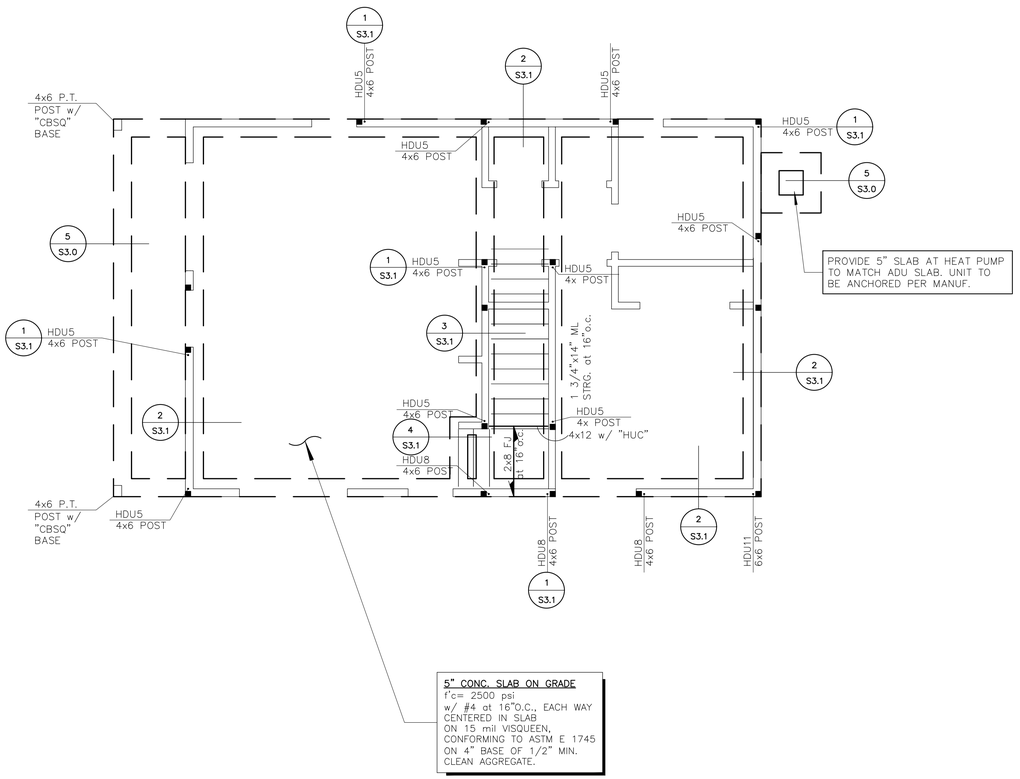

ALL NEW EXTERIOR WALLS SHALL BE SHEATHED WITH TYPE A PLYWOOD, MINIMUM, UNLESS NOTED OTHERWISE

COMMON NAILS ARE REQUIRED FOR ALL FLOOR SHEATHING, ROOF SHEATHING, AND SHEAR WALL NAILING

FOUNDATION PLAN
SCALE: 1/4" = 1'-0"

DESIGN EVEREST
CONSULTING ENGINEERS
365 FLOWER LANE
MOUNTAIN VIEW, CA 94043
PHONE: (888) 311-3015 FAX: (650) 695-1801

FOUNDATION PLAN

MATTOS
2383 MATTOS DRIVE
MILPITAS, CALIFORNIA

REV	DATE	DESCRIPTION
1	-	-
2	-	-
3	-	-
4	-	-
5	-	-

REGISTERED PROFESSIONAL ENGINEER
JESSE LANDON
C 83060
Exp. 09-30-24
CIVIL
STATE OF CALIFORNIA

SIGN DATE:	08-24-2023
DATE:	AS NOTED
SCALE:	AS NOTED
DRAWN BY:	JL
CKD BY:	JL
PROJECT #:	202212048

S-2.0

GENERAL FRAMING NOTES

1 4.0 : INDICATES SHEAR WALL w/ MIN. WALL LENGTH. SEE SCHEDULE ON SHEET S-4.0

2 4.0 : INDICATES SHEAR WALL w/ 3x FRAMING REQUIRED w/ MIN. WALL LENGTH. SEE SCHEDULE ON SHEET S-4.0

3 FT : INDICATES FLOOR TIE, VERTICAL, ACROSS FLOOR BELOW. CONNECT TO 4x POST MIN.ABOVE & BELOW FLOOR, U.N.O.

4 ■ : INDICATES POST, 4x MIN., U.N.O.

5 ⊠ : INDICATES (E) POST TO REMAIN, 4x MIN., U.N.O.

6 ALL FLUSH FRAMED MEMBERS SHALL BE SUPPORTED IN SIMPSON SERIES HANGERS: UNLESS NOTED OTHERWISE

"LUS" or "U" ..... FOR 2x TO WOOD BEAM
"LUS-2" ..... FOR DBL 2x TO WOOD/PSL BEAM
"HUSTF" ..... FOR 4x, 6x TO WOOD/PSL BEAM
"JB" ..... FOR 2x TO STEEL BEAM/NAILER
"WNP-2" ..... FOR DBL 2x TO STEEL BEAM/NAILER
"B" ..... FOR 4x, 6x TO STEEL BEAM/NAILER
"IUS" ..... FOR TJI TO WOOD/PSL BEAM
"HHUS" ..... FOR PSL BEAM TO WOOD/PSL BEAM
"ITS" ..... FOR TJI TO STEEL BEAM/NAILER
"HWU" U.N.O. ON PLAN ..... FOR PSL BEAM TO STEEL BEAM/NAILER

7 BOLT HOLES FOR HOLDOWN CONNECTIONS TO WOOD POSTS SHALL BE DRILLED ONLY 1/16" LARGER THAN THE REQUIRED BOLT SIZE. INSPECTOR TO VERIFY. BOLTS SHALL BE TORQUED AS REQUIRED BY THE MANUFACTURER.

8 SINGLE TRIMMERS REQ'D UNDER HEADERS 4x8, 6x8 AND SMALLER
DOUBLE TRIMMERS REQ'D UNDER HEADERS 4x10, 6x10 AND GREATER
UNLESS NOTED OTHERWISE ON PLANS.

9 ALL BEAMS DESIGNATED AS "DRAG STRUTS" SHALL HAVE PLYWOOD BOUNDARY NAILING.

10 PROVIDE WEB STIFFENERS AT ALL BEARING SUPPORTS AND HANGERS FOR ALL TJI MEMBERS.

11 ROOF NAILING MUST BE INSPECTED BY BUILDING DEPARTMENT INSPECTORS PRIOR TO COVERING.

CEILING JOIST SCHEDULE		
MAX. SPAN	JOIST SIZE	REMARKS
6 FEET	2x4 at 16"o.c.	
10 FEET	2x6 at 16"o.c.	
14 FEET	2x8 at 16"o.c.	
18 FEET	2x10 at 16"o.c.	
22 FEET	2x12 at 16"o.c.	

NOTES:
1. ALL FLUSH FRAMED MEMBERS SHALL BE SUPPORTED IN SIMPSON "LUS" OR "U" SERIES HANGERS.
2. DL: 10psf ; LL: 20psf

TYPICAL ROOF SHEATHING
5/8" CDX PLYWOOD, UNBLOCKED (P.I. = 32/16)
10d NAILS at 6/6/12
ROOF DIAPHRAGM NAILING TO BE INSPECTED BY CITY INSPECTOR PRIOR TO COVERING.

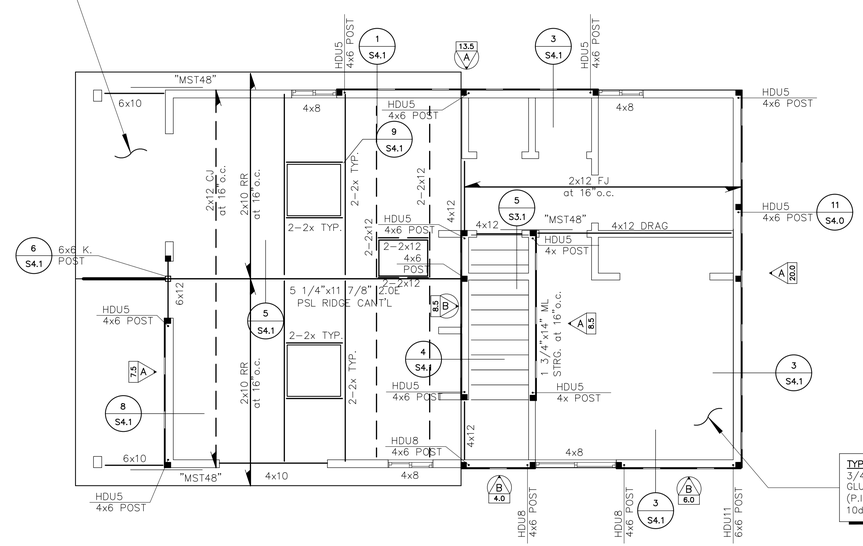

TYPICAL FLOOR SHEATHING
3/4" CDX T&G PLYWOOD, GLUENAILED
(P.I. = 48/24)
10d NAILS at 6/6/10

ALL NEW EXTERIOR WALLS SHALL BE SHEATHED WITH TYPE A PLYWOOD, MINIMUM, UNLESS NOTED OTHERWISE

COMMON NAILS ARE REQUIRED FOR ALL FLOOR SHEATHING, ROOF SHEATHING, AND SHEAR WALL NAILING

SECOND FLOOR FRAMING PLAN

SCALE: 1/4" = 1'-0"

DESIGN EVEREST
CONSULTING ENGINEERS
365 FLOWER LANE
MOUNTAIN VIEW, CA 94043
PHONE: (888) 311-3015 FAX: (650) 695-1801

ROOF FRAMING PLAN

MATTOS
2383 MATTOS DRIVE
MILPITAS, CALIFORNIA

REV	DATE	DESCRIPTION
1	-	-
2	-	-
3	-	-
4	-	-
5	-	-

REGISTERED PROFESSIONAL ENGINEER
JESSE LANDON
C 83060
Exp. 09-30-24
CIVIL
STATE OF CALIFORNIA

SIGN DATE:	08-24-2023
DATE:	AS NOTED
SCALE:	AS NOTED
DRAWN BY:	JL
CKD BY:	JL
PROJECT #:	202212048

S-2.1

GENERAL FRAMING NOTES

1 : INDICATES SHEAR WALL w/ MIN. WALL LENGTH. SEE SCHEDULE ON SHEET S-4.0

2 : INDICATES SHEAR WALL w/ 3x FRAMING REQUIRED w/ MIN. WALL LENGTH. SEE SCHEDULE ON SHEET S-4.0

3 FT : INDICATES FLOOR TIE, VERTICAL, ACROSS FLOOR BELOW. CONNECT TO 4x POST MIN.ABOVE & BELOW FLOOR, U.N.O.

4 ■ : INDICATES POST, 4x MIN., U.N.O.

5 ⊡ : INDICATES (E) POST TO REMAIN, 4x MIN., U.N.O.

6 ALL FLUSH FRAMED MEMBERS SHALL BE SUPPORTED IN SIMPSON SERIES HANGERS: UNLESS NOTED OTHERWISE

"LUS" or "U" ..... FOR 2x TO WOOD BEAM
"LUS-2" ..... FOR DBL 2x TO WOOD/PSL BEAM
"HUSTF" ..... FOR 4x, 6x TO WOOD/PSL BEAM
"JB" ..... FOR 2x TO STEEL BEAM/NAILER
"WNP-2" ..... FOR DBL 2x TO STEEL BEAM/NAILER
"B" ..... FOR 4x, 6x TO STEEL BEAM/NAILER
"IUS" ..... FOR TJI TO WOOD/PSL BEAM
"HHUS" ..... FOR PSL BEAM TO WOOD/PSL BEAM
"ITS" ..... FOR TJI TO STEEL BEAM/NAILER
"HWU" U.N.O. ON PLAN ..... FOR PSL BEAM TO STEEL BEAM/NAILER

7 BOLT HOLES FOR HOLDOWN CONNECTIONS TO WOOD POSTS SHALL BE DRILLED ONLY 1/16" LARGER THAN THE REQUIRED BOLT SIZE. INSPECTOR TO VERIFY. BOLTS SHALL BE TORQUED AS REQUIRED BY THE MANUFACTURER.

8 SINGLE TRIMMERS REQ'D UNDER HEADERS 4x8, 6x8 AND SMALLER DOUBLE TRIMMERS REQ'D UNDER HEADERS 4x10, 6x10 AND GREATER UNLESS NOTED OTHERWISE ON PLANS.

9 ALL BEAMS DESIGNATED AS "DRAG STRUTS" SHALL HAVE PLYWOOD BOUNDARY NAILING.

10 PROVIDE WEB STIFFENERS AT ALL BEARING SUPPORTS AND HANGERS FOR ALL TJI MEMBERS.

11 ROOF NAILING MUST BE INSPECTED BY BUILDING DEPARTMENT INSPECTORS PRIOR TO COVERING.

CEILING JOIST SCHEDULE		
MAX. SPAN	JOIST SIZE	REMARKS
6 FEET	2x4 at 16"o.c.	
10 FEET	2x6 at 16"o.c.	
14 FEET	2x8 at 16"o.c.	
18 FEET	2x10 at 16"o.c.	
22 FEET	2x12 at 16"o.c.	

NOTES:
1. ALL FLUSH FRAMED MEMBERS SHALL BE SUPPORTED IN SIMPSON "LUS" OR "U" SERIES HANGERS.
2. DL: 10psf ; LL: 20psf

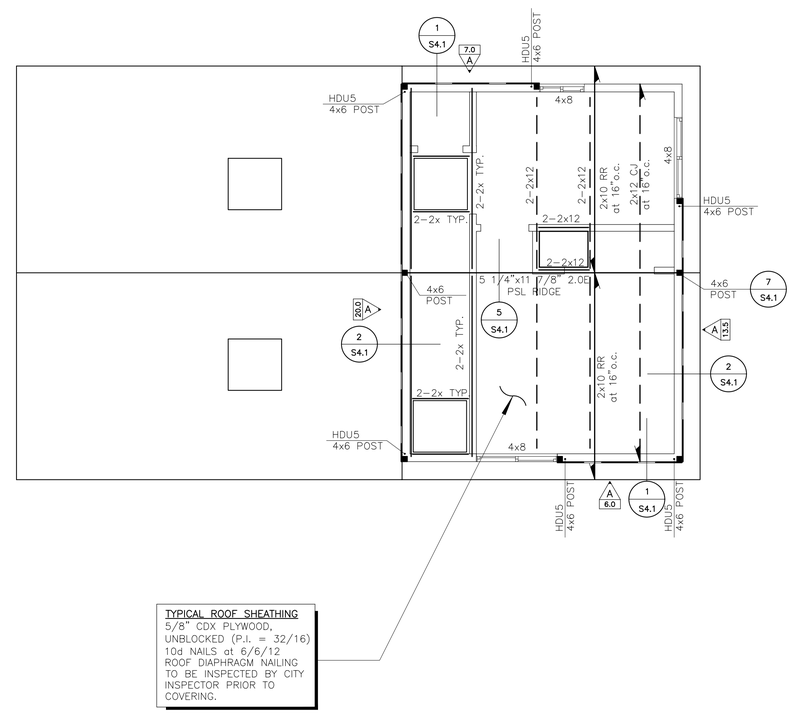

ALL NEW EXTERIOR WALLS SHALL BE SHEATHED WITH TYPE A PLYWOOD, MINIMUM, UNLESS NOTED OTHERWISE

COMMON NAILS ARE REQUIRED FOR ALL FLOOR SHEATHING, ROOF SHEATHING, AND SHEAR WALL NAILING

ROOF FRAMING PLAN

SCALE: 1/4" = 1'-0"

DESIGN EVEREST
CONSULTING ENGINEERS
365 FLOWER LANE
MOUNTAIN VIEW, CA 94043
PHONE: (888) 311-3015 FAX: (650) 695-1801

ROOF FRAMING PLAN

MATTOS
2383 MATTOS DRIVE
MILPITAS, CALIFORNIA

REV	DATE	DESCRIPTION
1	-	-
2	-	-
3	-	-
4	-	-
5	-	-

REGISTERED PROFESSIONAL ENGINEER JESSE LANDGRAFF C 83060 Exp. 09-30-24 CIVIL STATE OF CALIFORNIA

SIGN DATE: 08-24-2023
DATE: AS NOTED
SCALE: AS NOTED
DRAWN BY: JL
CKD BY: JL
PROJECT #: 202212048

S-2.2

LAP LENGTH SCHEDULE

BAR SIZE	UNCOATED				EPOXY COATED			
	3,000 psi (IN.)		4,000 psi (IN.)		3,000 psi (IN.)		4,000 psi (IN.)	
	TOP	OTHER	TOP	OTHER	TOP	OTHER	TOP	OTHER
#4	37	30	32	25	48	45	42	38
#5	47	36	40	31	62	54	53	47
#6	56	43	48	37	74	64	63	56
#7	81	63	70	54	107	94	92	81
#8	93	72	80	62	122	107	105	93
#9	105	81	91	70	138	121	120	105
#10	118	91	102	79	155	136	134	118
#11	131	101	113	87	172	151	148	131

CLASS "B" (FORMERLY CLASS "C")

AT STRUCTURAL SLABS:
TOP BARS: LAP AT MIDSPAN, U.N.O
BOTTOM BARS: LAP AT SUPPORTS, U.N.O.

LAP LENGTH SCHEDULE 2

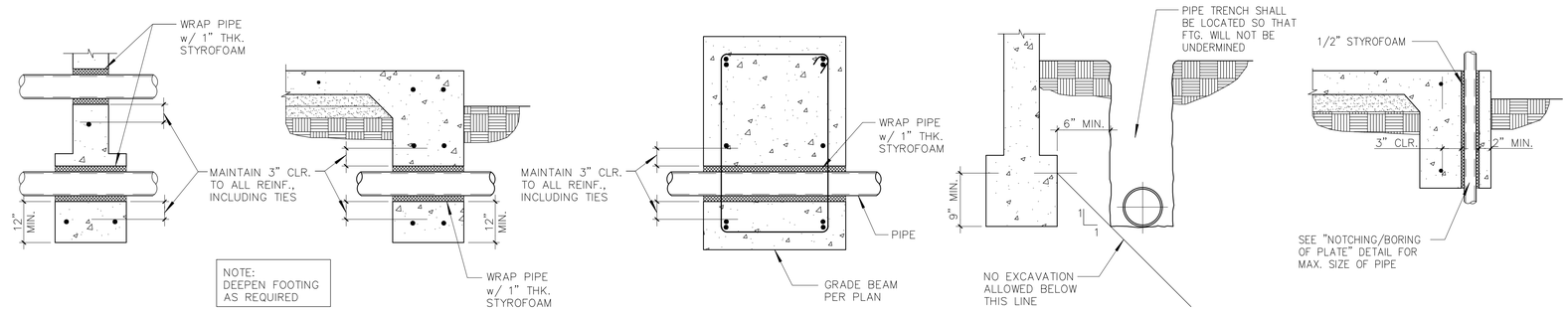

PIPE THROUGH & ADJACENT TO FOOTING 1

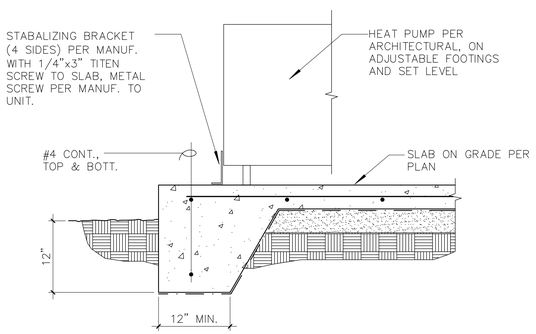

SLAB EDGE DETAILS 5

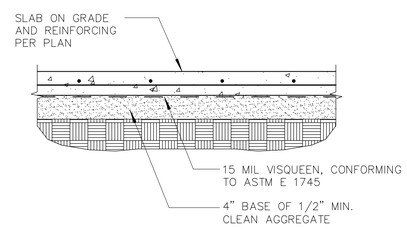

GREEN BLDG CODE SLAB DETAIL 4

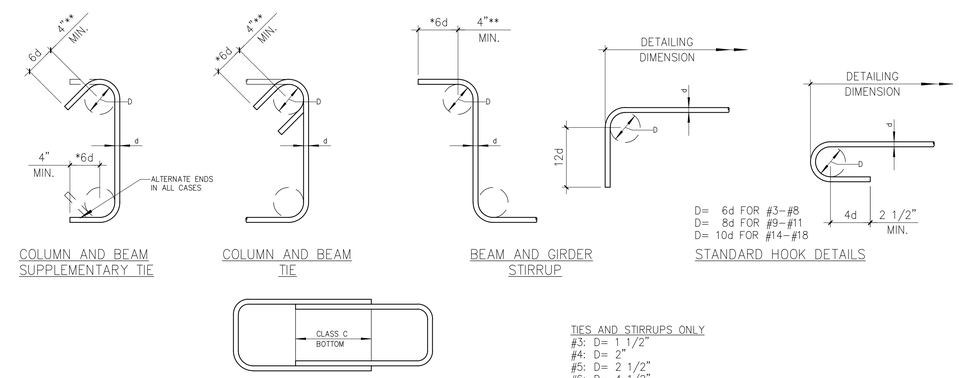

NOTE:
THIS TIE LAP DETAIL IS NOT PERMISSIBLE FOR OUTER TIES.

TIES AND STIRRUPS ONLY
#3: D= 1 1/2"
#4: D= 2"
#5: D= 2 1/2"
#6: D= 4 1/2"

TIE NOTES:
*1. PROVIDE 10d EXTENSIONS IN LIEU OF 6d AT ALL FRAME COLUMNS AND GIRDERS.
**2. 2 1/2"ø SEISMIC ZONES 0 & 1.

TYP. STD. HOOK & TIE DETAIL 3

8 7 6

DESIGN EVEREST
CONSULTING ENGINEERS
365 FLOWER LANE
MOUNTAIN VIEW, CA 94043
PHONE: (888) 311-3015 FAX: (650) 695-1801

DETAILS

MATTOS
2383 MATTOS DRIVE
MILPITAS, CALIFORNIA

REV	DATE	DESCRIPTION
1	-	-
2	-	-
3	-	-
4	-	-
5	-	-

REGISTERED PROFESSIONAL ENGINEER
JESSE LANDEROS
C 83060
Exp. 09-30-24
CIVIL
STATE OF CALIFORNIA

SIGN DATE:	08-24-2023
DATE:	AS NOTED
SCALE:	AS NOTED
DRAWN BY:	JL
CKD BY:	JL
PROJECT #:	202212048

S-3.0

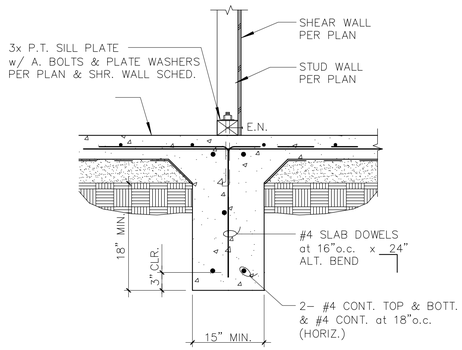

FOUNDATION DETAIL 3

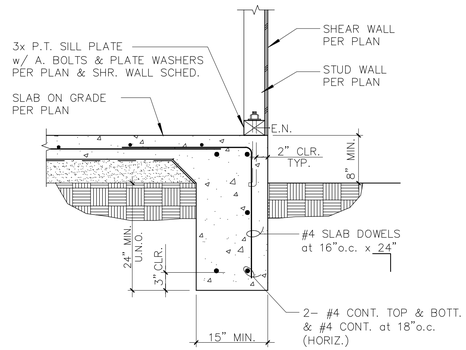

FOUNDATION DETAIL 2

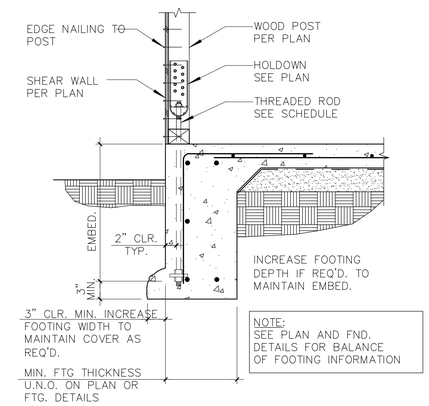

HOLDOWN SCHEDULE

MODEL NO.	BOLT DIA.	WASHER	EMBED	MIN. FTG. THICKNESS
HDU2	5/8" ø	2 1/2" SQ.	14"	12"
HDU4	5/8" ø	2 1/2" SQ.	14"	12"
HDU5	5/8" ø	2 1/2" SQ.	14"	12"
HDU8	7/8" ø	3" SQ.	20"	15"
HDU11	1" ø	3 1/2" SQ.	24"	18"
HDU14	1" ø	3 1/2" SQ.	24"	18"

NOTES:

1. SQUARE WASHERS SHALL BE 1/4" MIN.
2. SIMPSON STRONG TIE ICC-ER #2330, L.A.R.R. #25720
3. ROD SHOULD BE ASTM A307 OR A36.
4. TIGHTEN ALL BOLTS PRIOR TO COVERING.
5. ALL HOLDOWN HARDWARE IS TO BE SECURE IN PLACE PRIOR TO FOUNDATION INSPECTION.
6. ALL SCREWS SHALL BE SIMPSON SDS 1/4"ø x 2 1/2" LONG MIN.
7. SIMPSON "SSTB" OR "SB" ANCHOR BOLTS MAY NOT BE USED WITHOUT PRIOR WRITTEN APPROVAL FROM THE STRUCTURAL ENGINEER.

HOLDOWN ANCHOR DETAIL 1

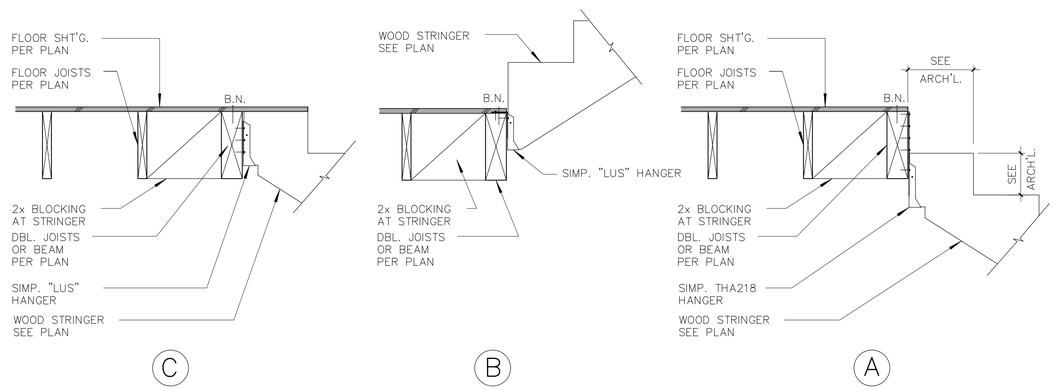

STAIR STRINGER CONNECTIONS 5

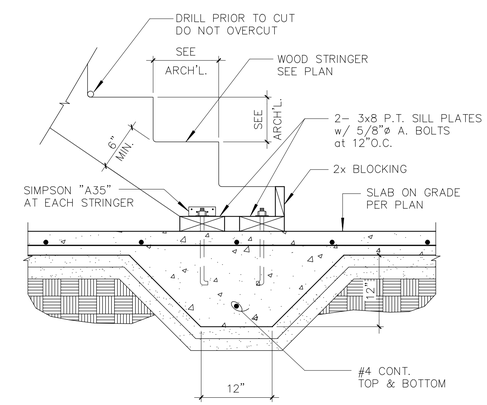

STAIR STRINGER TO FOOTING 4

6

10

9

8

7

DESIGN EVEREST
CONSULTING ENGINEERS
365 FLOWER LANE
MOUNTAIN VIEW, CA 94043
PHONE: (888) 311-3015 FAX: (650) 695-1801

DETAILS

MATTOS
2383 MATTOS DRIVE
MILPITAS, CALIFORNIA

REV	DATE	DESCRIPTION
1	-	-
2	-	-
3	-	-
4	-	-
5	-	-

REGISTERED PROFESSIONAL ENGINEER
JESSE LANDORF
C 83060
Exp. 09-30-24
CIVIL
STATE OF CALIFORNIA

SIGN DATE:	08-24-2023
DATE:	AS NOTED
SCALE:	AS NOTED
DRAWN BY:	JL
CKD BY:	JL
PROJECT #:	202212048

S-3.1

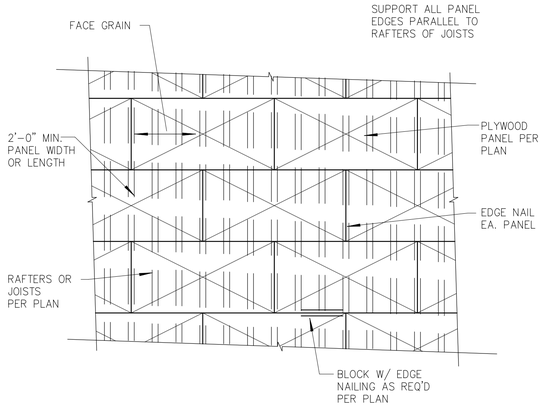

DIAPHRAGM DETAIL 4

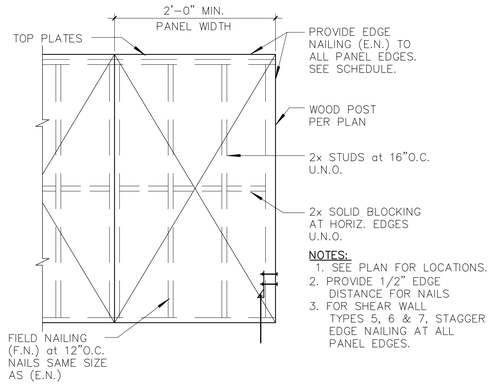

NOTES:
1. SEE PLAN FOR LOCATIONS.
2. PROVIDE 1/2" EDGE DISTANCE FOR NAILS
3. FOR SHEAR WALL TYPES 5, 6 & 7, STAGGER EDGE NAILING AT ALL PANEL EDGES.

NOTE: FOR SPECIFIC SHEAR WALL CONDITIONS SEE SCHEDULE OR ELEVATIONS.

SHR. WALL CONSTRUCTION 3

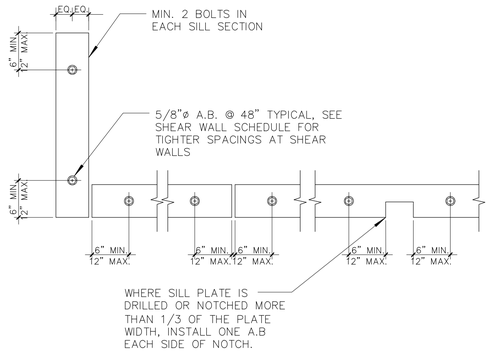

TYP. SILL PLATE BOLTING 2

SHEAR WALL SCHEDULE

SYMB.	DESCRIPTION: MATERIAL[2]	DESCRIPTION: 3x[4] FRMG	EDGE[2] NAILING	BOLTS[5]: 5/8"ø A.B.	SILL TRANSFER: 16d[5]	SILL TRANSFER: LAG[3]	SILL TRANSFER: SDS[4]	A35[2] SPCG. FROM RIM BLKG TO DBL TOP PLATE	VALUE	
A	15/32" STRUCT. I PLYWOOD (ONE SIDE)	---	10d @ 6"	32"	4"	12"	12"	16"	340 plf	
B	15/32" STRUCT. I PLYWOOD (ONE SIDE)	YES	10d @ 4"	32"	---	10"	8"	16"	510 plf	
C	15/32" STRUCT. I PLYWOOD (ONE SIDE)	YES	10d @ 3"	24"	---	8"	6"	12"	655 plf	
D	15/32" STRUCT. I PLYWOOD (ONE SIDE)	YES	10d @ 2"	16"	---	6"	4"	8"	870 plf	SOLID RIM/ BLKG. REQ'D.
BB	15/32" STRUCT. I PLYWOOD (TWO SIDES)	YES	10d @ 4"	16"	---	5"	4"	8"	1020 plf	SOLID RIM/ BLKG. REQ'D.
CC	15/32" STRUCT. I PLYWOOD (TWO SIDES)	YES	10d @ 3"	12"	---	4"	3"	8" EACH SIDE	1310 plf	SOLID RIM/ BLKG. REQ'D.
DD	15/32" STRUCT. I PLYWOOD (TWO SIDES)	YES	10d @ 2"	8"	---	3"	2"	8" EACH SIDE	1740 plf	SOLID RIM/ BLKG. REQ'D.

FOOTNOTES[1]
1. ALL NAILS SHALL BE COMMON NAILS. ALL PLYWOOD SHEAR WALL PANEL EDGES SHALL BE BLOCKED. ALL FIELD NAILING SHALL BE @ 12"o.c.
2. SIMPSON "LTP4" FRAMING ANCHOR MAY BE SUBSTITUTED FOR A35.
3. 3/8" DIAMETER x 6" LONG FULL BODY DIAMETER LAG SCREWS SHALL BE USED.
4. SIMPSON 1/4" DIAMETER X 6" LONG "SDS" SCREWS.
5. 16d COMMON NAILS SHALL BE USED THROUGH THE SILL PLATE.
6. 3x FRAMING SHALL BE USED AT BOTTOM SILL PLATES AND AT ALL BLOCKING AND STUDS AT ADJACENT PANEL EDGES.
7. USE 4-PLY PLYWOOD (MINIMUM)
8. PLATE WASHER REQUIREMENTS:
PROVIDE APPROVED PLATE WASHERS PER THE PLATE WASHER SCHEDULE ON THE FOUNDATION PLAN.
9. ANCHOR BOLTS REQUIREMENTS:
ANCHOR BOLTS IN CONTACT WITH PRESSURE TREATED LUMBER TO BE HOT-DIPPED GALVANIZED.
ANCHOR BOLTS SHALL BE EMBEDDED 9" MIN

SHEAR WALL SCHEDULE 1

NAILING SCHEDULE

JOIST TO SILL OR GIRDER, TOENAIL	3-8d
BRIDGING TO JOIST, TOENAIL EACH END	2-8d
JOISTS TO BLOCKING, END NAIL	16d top & bott.
RIM JOIST TO JOISTS, END NAIL	16d top & bott.
FLOOR JOIST LAP @ BEARING, FACE NAIL	2-16d
SOLE PLATE TO JOIST OR BLOCKING, FACE NAIL	16d @ 16"oc
STUD TO TOP PLATE, END NAIL	2-16d
STUD TO SOLE PLATE	4-8d, toenail or 2-16d, end nail
DOUBLE STUDS, FACE NAIL	16d @ 24"oc
DOUBLE TOP PLATES, FACE NAIL	16d @ 16"oc
DOUBLE TOP PLATES, LAP SPLICE, FACE NAIL	8-16d
DOUBLE TOP PLATES, INTERSECTIONS, FACE NAIL	2-16d
CEILING JOISTS TO PLATE, TOENAIL	3-8d
CEILING JOISTS, LAP OVER PARTITIONS, FACE NAIL	3-16d
CEILING JOISTS TO PARALLEL RAFTERS, FACE NAIL	3-16d
RAFTER TO PLATE, TOENAIL	3-8d
RAFTER TO RIDGE	2-16d
BUILT-UP CORNER STUDS	16d @ 24"oc
POST TO PIER PAD, TOENAIL	3-16d
GIRDER TO POST, TOENAIL	3-16d
2X PLANKS, FACE NAIL @ BEARING	2-16d
1 x 6 SUBFLOOR OR LESS TO EACH JOIST, FACE NAIL	2-8d
1 x 8 & WIDER SUBFLOOR TO EACH JOIST, FACE NAIL	3-8d
2 x SUBFLOOR TO JOIST OR GIRDER, BLIND AND FACE NAIL	2-16d
1 x BRACE TO EACH STUD AND PLATE, FACE NAIL	2-8d
1 x 8 SHEATHING OR LESS TO EACH BEARING, FACE NAIL	2-8d
1 x 10 & WIDER SHEATHING TO EACH BEARING, FACE NAIL	3-8d
BLOCKING BETWEEN JOISTS OR RAFTERS TO TOP PLATE, TOENAIL	3-8d
RIM JOIST TO TOP PLATE, TOENAIL	8d @ 6" o.c.
CONTINUOUS HEADER, TWO PIECES	16d @ 16" o.c. along each edge
CONTINUOUS HEADER TO STUD, TOENAIL	4-8d
BUILT-UP GIRDER AND BEAMS	20d @ 32" o.c. at top and bottom and staggered 2-20d at ends and at each splice

NOTES:
1. COMMON OR BOX NAILS MAY BE USED.
2. SCHEDULE BASED ON DOUGLAS FIR-LARCH FRAMING.
3. TABLE BASED ON 2022 CBC TABLE 2304.10.1
4. THESE CONNECTIONS ARE MINIMUM CONDITIONS AND MAY BE SUPERSEDED BY MORE SPECIFIC DETAILS AS INDICATED ON THESE PLANS.

NAILING SCHEDULE 8

LAG SCREW ASSEMBLY[1,2,3,4]		
SCREW DIAMETER (IN.)	LEAD HOLE[5] DIAMETER (IN.)	
	DOUG. FIR & SO. PINE	REDWOOD
1/4, 5/16, 3/8	NOT REQ.	NOT REQ.
7/16	5/16	1/4
1/2	3/8	5/16
5/8	7/16	3/8
3/4	1/2	7/16
7/8	5/8	1/2
1	3/4	5/8

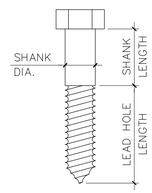

NOTES:
1. TABLE APPLIES FOR DOUGLAS FIR LARCH, SOUTHERN PINE WOODS, AND REDWOOD (PER NDS 2018 SEC. 11.1.4).
2. LAG SCREWS SHALL BE WRENCH TIGHTENED; HAMMERING OF LAG SCREWS IS NOT PERMITTED.
3. SOAP OR OTHER APPROVED LUBRICANTS SHALL BE USED ON THE THREADED PORTION OF THE LAG SCREW TO PREVENT DAMAGING THE SCREW AND FACILITATE INSERTION.
4. THE SHANK HOLE SHALL HAVE THE SAME DIAMETER AND DEPTH OF PENETRATION AS THE SHANK LENGTH AND DIAMETER.
5. THE LEAD HOLE SHALL HAVE THE SAME DEPTH AS THE THREADED PORTION OF THE LAG SCREW.

LAG SCREW REQUIREMENTS 7

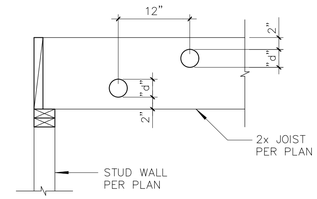

SIZE	"d" MAX.
2 x 6	1 3/4"
2 x 8	2 3/8"
2 x 10	3"
2 x 12	3 3/4"
2 x 14	4 3/8"

NOTE:
NOTCHING JOISTS IS NOT ACCEPTABLE WITHOUT STRUCTURAL ENGINEERS APPROVAL

BORING OF JOISTS 6

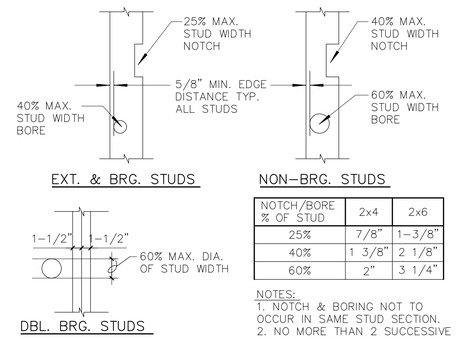

NOTCH/BORE % OF STUD	2x4	2x6
25%	7/8"	1-3/8"
40%	1 3/8"	2 1/8"
60%	2"	3 1/4"

NOTES:
1. NOTCH & BORING NOT TO OCCUR IN SAME STUD SECTION.
2. NO MORE THAN 2 SUCCESSIVE DOUBLE STUDS MAY HAVE 60% MAX. BORED HOLES.

STUD BORING/NOTCHING 5

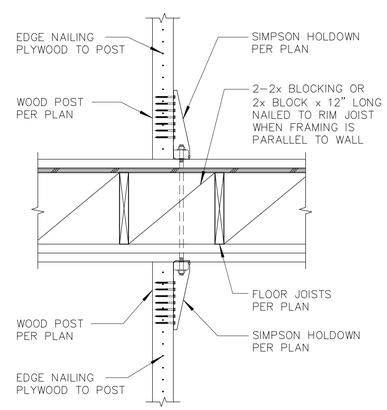

HOLDOWN AT FLOOR 11

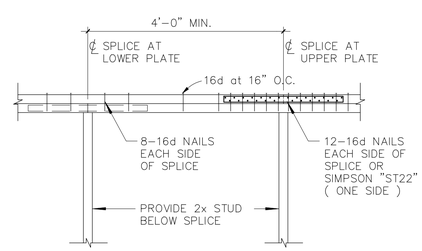

ELEVATION

DBL TOP PLATE SPLICE 10

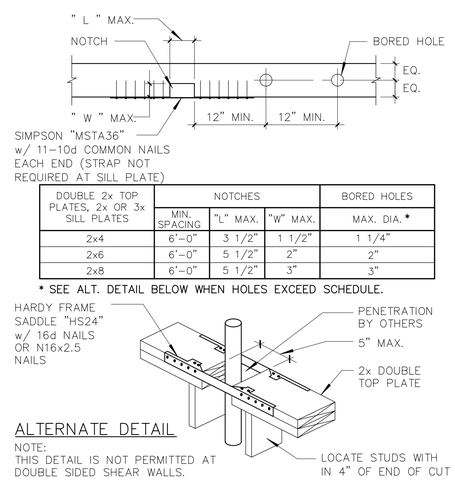

DOUBLE 2x TOP PLATES, 2x OR 3x SILL PLATES	NOTCHES			BORED HOLES
	MIN. SPACING	"L" MAX.	"W" MAX.	MAX. DIA. *
2x4	6'-0"	3 1/2"	1 1/2"	1 1/4"
2x6	6'-0"	5 1/2"	2"	2"
2x8	6'-0"	5 1/2"	3"	3"

* SEE ALT. DETAIL BELOW WHEN HOLES EXCEED SCHEDULE.

ALTERNATE DETAIL

NOTE:
THIS DETAIL IS NOT PERMITTED AT DOUBLE SIDED SHEAR WALLS.

SHEAR WALL PLATE PENETRATIONS 9

12

DESIGN EVEREST
CONSULTING ENGINEERS
365 FLOWER LANE
MOUNTAIN VIEW, CA 94043
PHONE: (888) 311-3015 FAX: (650) 695-1801

DETAILS

MATTOS
2383 MATTOS DRIVE
MILPITAS, CALIFORNIA

REV	DATE	DESCRIPTION
1	-	-
2	-	-
3	-	-
4	-	-
5	-	-

REGISTERED PROFESSIONAL ENGINEER JESSE LANDON C 83060 Exp. 09-30-24 CIVIL STATE OF CALIFORNIA

SIGN DATE:	08-24-2023
DATE:	AS NOTED
SCALE:	AS NOTED
DRAWN BY:	JL
CKD BY:	JL
PROJECT #:	202212048

S-4.0

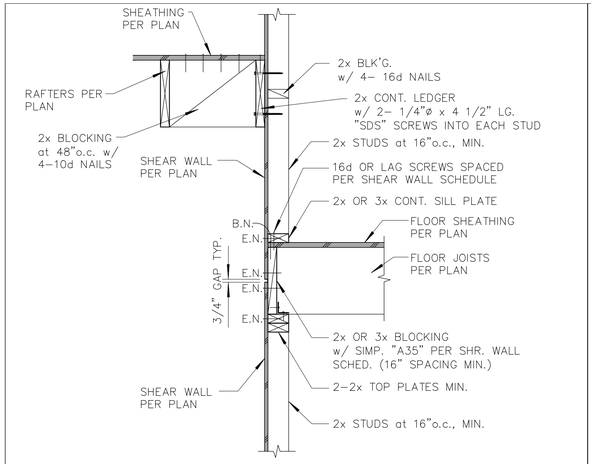

NOTE:
USE 3x FRAMING MEMBERS WHERE SHOWN, WHEN INDICATED ON PLANS & SHEAR WALL SCHEDULE

SHEAR WALL CONNECTION | 4

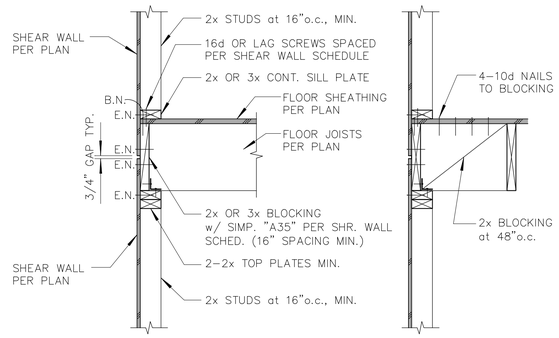

NOTE:
USE 3x FRAMING MEMBERS WHERE SHOWN, WHEN INDICATED ON PLANS & SHEAR WALL SCHEDULE

SHEAR WALL CONNECTION | 3

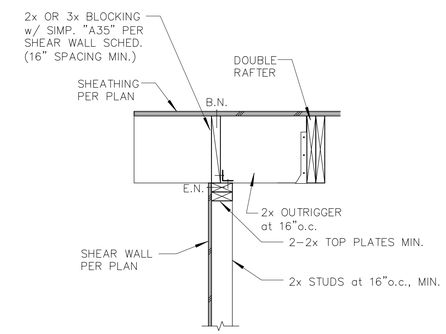

NOTE:
USE 3x FRAMING MEMBERS WHERE SHOWN, WHEN INDICATED ON PLANS & SHEAR WALL SCHEDULE

SHEAR WALL CONNECTION | 2

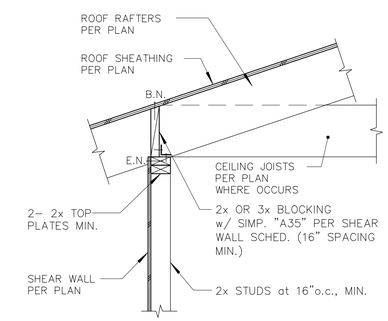

NOTE:
USE 3x FRAMING MEMBERS WHERE SHOWN, WHEN INDICATED ON PLANS & SHEAR WALL SCHEDULE

RAFTER CONNECTION AT WALL | 1

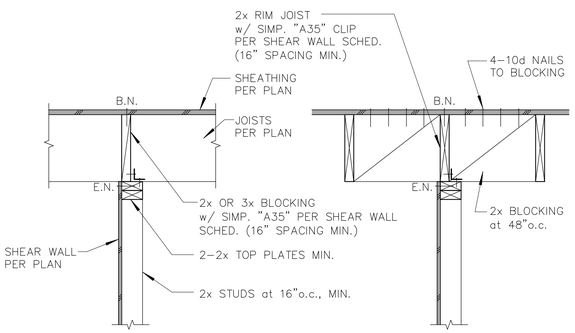

NOTE:
USE 3x FRAMING MEMBERS WHERE SHOWN, WHEN INDICATED ON PLANS & SHEAR WALL SCHEDULE

SHEAR WALL CONNECTION | 8

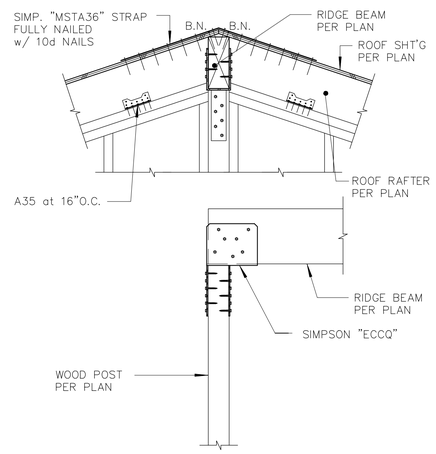

POST CONNECTION | 7

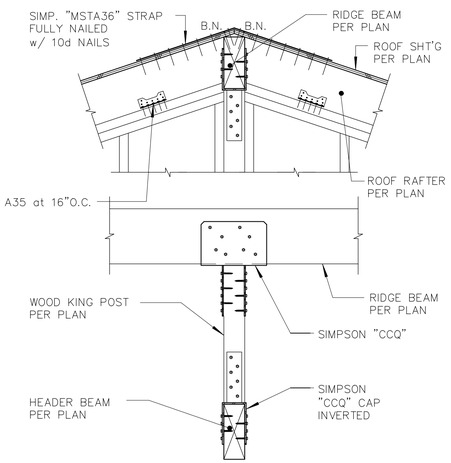

KING POST CONNECTION | 6

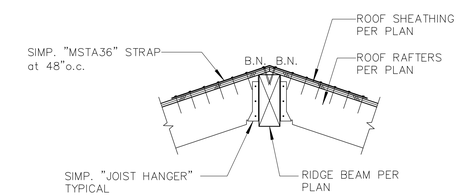

RIDGE CONNECTION | 5

11	

10

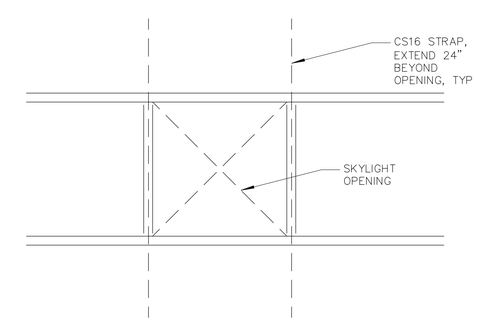

SKYLIGHT STRAPPING | 9

DESIGN EVEREST
CONSULTING ENGINEERS
365 FLOWER LANE
MOUNTAIN VIEW, CA 94043
PHONE: (888) 311-3015 FAX: (650) 695-1801

DETAILS

MATTOS
2383 MATTOS DRIVE
MILPITAS, CALIFORNIA

REV	DATE	DESCRIPTION
1	-	-
2	-	-
3	-	-
4	-	-
5	-	-

REGISTERED PROFESSIONAL ENGINEER
JESSE LANDORF
C 83060
Exp. 09-30-24
CIVIL
STATE OF CALIFORNIA

SIGN DATE:	08-24-2023
DATE:	AS NOTED
SCALE:	AS NOTED
DRAWN BY:	JL
CKD BY:	JL
PROJECT #:	202212048

S-4.1