REGULAR MEETING OF THE MILPITAS CITY COUNCIL

AGENDA

TUESDAY, MAY 21, 2024
CITY COUNCIL CHAMBER, 455 E. CALAVERAS BLVD, MILPITAS, CA
6:00 PM (CLOSED SESSION)
7:00 PM (PUBLIC BUSINESS)

For assistance in the following languages, you may call:
Đối với Việt Nam, gọi 408-586-2400
Para sa Tagalog, tumawag sa 408-586-3051
Para español, llame 408-586-3072

** To access written translation during the meeting, scan the QR Code.*

The City Council meeting is held in the City Council Chamber at City Hall, 455 E. Calaveras Blvd., Milpitas and via teleconference/Zoom webinar.
You may watch the Council meeting without providing public comment by accessing it via links here.

Meeting shall be livestreamed - Go to:
Facebook: https://www.facebook.com/CityofMilpitas/
YouTube: https://www.milpitas.gov/youtube
Web Streaming: https://www.milpitas.gov/webstreaming

PUBLIC COMMENT INSTRUCTIONS

Oral public comments may only be provided live during the City Council meeting in person, unless the City Council approves remote public comment. All comments provided shall be limited to three minutes or less as determined by the Mayor. All members of the public will be limited to one comment per agenda item, and one comment for non-agenda items. Members of the public may submit written comments by email to CityClerk@milpitas.gov.

The meeting will be streamed via Zoom for viewing purposes only unless the City Council approves remote public comment. To watch via Zoom, please register at:

https://ci-milpitas-ca-gov.zoom.us/webinar/register/WN_n6YZJlq1QjmkJMDhqkVIng

NOTE: If a member of the public wishes to share any presentation materials for Council consideration, they must be submitted to the Clerk's Office by email to CityClerk@milpitas.gov by 12:00 p.m. on the day of the meeting. No presentations will be accepted in person in the Council Chambers.

MILPITAS CITY COUNCIL CODE OF CONDUCT

- Be respectful and courteous (words, tone, and body language).
- Model civility.
- Avoid surprises.
- Praise publicly and criticize privately.
- Focus on the issue, not the person.
- Refrain from using electronic devices while on the Council dais.
- Disclose conflicts of interest and affiliations related to agenda items.
- Separate governing from campaigning.
- The Council speaks with one voice after making policy on issues.
- Respect the line between policy and administration.
- Council will hold one another accountable to comply with this Code of Conduct.

CALL MEETING TO ORDER by Mayor and ROLL CALL by City Clerk (6:00 PM)

ADJOURN TO CLOSED SESSION

(a) PUBLIC EMPLOYEE PERFORMANCE EVALUATION

Pursuant to California Government Code Section 54957
Position: City Manager

CLOSED SESSION ANNOUNCEMENT:

Report on action taken in Closed Session, if required per Government Code Section 54957.1, including the vote or abstention of each member present.

PLEDGE OF ALLEGIANCE

INVOCATION (Vice Mayor Chua)

PRESENTATIONS (7:05 PM)

- Asian American, Native Hawaiian, and Pacific Islander (AANHPI) Heritage Month (Proclamation)
- Public Works Week (Proclamation)

PUBLIC FORUM (7:10 PM)

Members of the public are invited to speak on any item that does not appear on today's agenda. Comments will be limited to three minutes or less at the Mayor's discretion. When called to speak, you are encouraged to state your name for the record. As an item not listed on the agenda, no action can be taken, however the City Council may instruct the City Manager to place the item on a future meeting agenda.

ANNOUNCEMENT OF CONFLICT OF INTEREST AND CAMPAIGN CONTRIBUTIONS

READING OF THE CITY COUNCIL CODE OF CONDUCT

APPROVAL OF AGENDA

CONSENT CALENDAR (7:15 PM)

Consent calendar items are considered to be routine and will be considered for adoption by one motion. There will be no separate discussion of these items unless a City Councilmember, member of the audience or staff requests the Council to remove an item from (or be added to) the consent calendar. Any person desiring to speak on any item on the consent calendar should ask to have that item removed from the consent calendar.

C1. Receive City Council Calendar of Meetings for May and June 2024 (Staff Contact: Suzanne Guzzetta, City Clerk, 408-586-3001)

Recommendation: Receive City Council Calendar of Meetings for May and June 2024.

C2. Approve City Council City Council Meeting Minutes of May 7, 2024 (Staff Contact: Suzanne Guzzetta, City Clerk, 408-586-3001)

Recommendation: Approve City Council Meeting minutes of May 7, 2024.

C3. Receive the Preview List of Anticipated Items for the Next Regular City Council Meeting (Staff Contact: Suzanne Guzzetta, City Clerk, 408-586-3001)

Recommendation: Receive the list of anticipated agenda items for the next regular City Council meeting.

C4. Receive and Review the List of Agenda Items Requested by City Councilmembers (Staff Contact: Suzanne Guzzetta, City Clerk, 408-586-3001)

Recommendation: Review the list of items that have been requested by City Councilmembers and provide direction to staff as necessary. No substantive discussion about any specific item shall occur and the City Council shall hold all debate about the item until it is scheduled as a full agenda item.

C5. Authorize the Reallocation of Money Appropriated in the FY 2023-2024 Budget from the Legacy Special Council Provider to the Current Special Council Provider and Approve and Authorize the City Attorney and City Manager to Execute an Amendment to the Contract with Meyers Nave for Contracted Outside Counsel (Staff Contact: Michael Mutalipassi, City Attorney, 408-586-3040)

Recommendation: (1) Authorize the reallocation of money appropriated in the FY-23/24 budget from the legacy special council provider to the current special council provider and approve; (2) Approve an amendment to the contract with Meyers Nave for contracted outside counsel in the amount of $90,000; and (3) Authorize the City Attorney and City Manager to execute the amended agreement.

C6. Confirm Chamber of Commerce Appointment to the Economic Development and Trade Commission (Staff Contact: Suzanne Guzzetta, City Clerk, 408-586-3004)

Recommendation: Receive the Chamber of Commerce recommendation for appointment to the Economic Development and Trade Commission and confirm appointment.

C7. Receive Summary of 2024 Earmark Requests (Staff Contact: Matt Cano, Assistant City Manager, 408-586-3012)

Recommendation: Accept the report outlining the City of Milpitas' 2024 State and Federal Earmark Requests.

C8. Adopt a Resolution Accepting Public Improvements and Approve a Reduction of Faithful Performance Bond for Public Improvements for the RCD Housing Project Located at 355 Sango Court (Staff Contact: Christian Di Renzo, Public Works Director, 408-586-2602; Michael Silveira, City Engineer, 408-586-3303; and Roberto Alonzo, Public Works Division Manager – Engineering, 408-586-3316)

Recommendation: Adopt a resolution granting acceptance of the completed public improvements for the RCD Housing Project as shown on Public Improvement Plans No. 2-1386; and approve a reduction in the faithful performance bond to $396,275.75, which is 25% of the security's original value for the public improvements construction cost and shall be in effect for the duration of the warranty period; and grant authorization to the City Engineer to release the remaining portion of the performance bond after the one-year warranty period without further City Council action provided all required warranty work is completed to the satisfaction of the City Engineer.

C9. Receive and Approve the Calendar Year 2023 Controlled Equipment Annual Report (Staff Contact: Jared Hernandez, Chief of Police, 408-586-2406)

Recommendation: Receive and approve the Calendar Year 2023 Controlled Equipment Annual Report.

C10. Adopt a Resolution Accepting ARPA Park Rehabilitation Phase 1, Project No. 3500, Authorizing the Public Works Director to File a Notice of Completion, and Authorize the City to issue a Notice of Final Acceptance after the One-Year Warranty (Staff Contact: Christian Di Renzo, Public Works Director, 408-586-2602)

Recommendation: Adopt a resolution granting acceptance of ARPA Park Rehabilitation Phase 1, Project No. 3500, authorizing the Public Works Director to file a Notice of Completion, and authorizing

the Public Works Director to issue a Notice of Final Acceptance after the one-year warranty.

C11. Receive Final Update on Storm Drain System Emergency Repairs and Improvements at Evans Road and Piedmont Creek, Terminate the Emergency Declaration, and Adopt a Resolution Granting Acceptance of the Emergency Declaration - Storm Drain System Repairs and Improvements (Staff Contact: Christian Di Renzo, Public Works Director, 408-586-2602)

Recommendation: (1) Receive an update on the emergency repairs and improvements at Evans Road and Piedmont Creek; (2) Approve the termination of the emergency declaration; and (3) Adopt a resolution granting acceptance of Storm Drain System Repairs and Improvements at Evans Road and Piedmont Creek, Project No. 24-044 and 24-045, and authorizing the Public Works Director to file a Notice of Completion and issue a Notice of Final Acceptance after the one-year warranty.

C12. Approve Agreements and Related Amendments with the County of Santa Clara for the Collection of AB939 Implementation Fees and Administration of the Countywide Household Hazardous Waste (HHW) Collection Program (Staff Contact: Christian Di Renzo, Public Works Director, 408-586-2602; and Elaine Marshall, Deputy Public Works Director, 408-586-2603)

Recommendation: Approve and authorize the City Manager to execute two agreements and related amendments with the County of Santa Clara for (1) Collection of AB939 Implementation Fees and (2) Administration of the Countywide Household Hazardous Waste (HHW) Collection Program for the term July 1, 2024 – June 30, 2027.

C13. Approve a Professional Service Agreement with Backflow Prevention Specialists, Inc. for the Backflow Hazard Assessment Survey (Staff Contact: Christian Di Renzo, Public Works Director, 408-586-2602; and Michael Silveira, City Engineer, 408-586-3303)

Recommendation: Approve and authorize the City Manager to execute a Professional Service Agreement with Backflow Prevention Specialists, Inc. in the amount of $121,394.00 for the Backflow Hazard Assessment Survey.

C14. Consider Fee Waiver Requests from the Samuel Ayer High School Alumni Association, Rotary Club of Milpitas, and LEAD Filipino, and a Donation to the Sunnyhills Neighborhood Association (Staff Contact: Renee Lorentzen, Recreation and Community Services Director, 408-586-3409)

Recommendation: (1) Approve a fee waiver of $1,500.00 for the Samuel Ayer High School 24th Annual Reunion at Murphy Park on September 21, 2024; (2) Approve a fee waiver of $522.50 for the Rotary Club of Milpitas Fundraiser “A Rose for You” on May 19, 2024; (3) Approve a fee waiver of $93.00 for the LEAD Filipino Yoga event at Delano Manongs Park Filed on June 9, 2024; and (4) Approve a donation of $500.00 for the Sunnyhills Neighborhood Association Milpitas Juneteenth 2024 event at Sunnyhills Albert Augustine, Jr. Memorial Park on June 15, 2024.

C15. Approve the Community Heroes Program City Council Policy (Staff Contact: Renee Lorentzen, Recreation and Community Services Director, 408-586-3409)

Recommendation: Approve the Community Heroes City Council Policy.

PUBLIC HEARINGS (7:20 PM)

Members of the public may be allotted up to three (3) minutes or less at the Mayor’s discretion, to comment on any public hearing item. Applicants/Appellants and their representatives may be allotted up to a total of ten (10) minutes for opening statements and up to a total of five (5) minutes maximum for closing statements. Items requested/recommended for continuance are subject to Council’s consent at the meeting.

16. Approve the Conceptual Designs for South Milpitas Boulevard Road Extension, Project No. 2016, and Montague Pedestrian Overcrossing at Penitencia Creek, Project No. 2018; and Adopt a

Resolution Adopting the Initial Study Mitigated Negative Declaration for South Milpitas Boulevard Road Extension, Project No. 2016 (Staff Contact: Christian Di Renzo, Public Works Director, 408-586-2602; and Michael Silveira, City Engineer, 408-586-3303)

Recommendation: (1) Approve the conceptual designs for the South Milpitas Boulevard Road Extension, Project No. 2016, and the Montague Pedestrian Overcrossing at Penitencia Creek, Project No. 2018; (2) Conduct a public hearing for the South Milpitas Boulevard Road Extension, Project No. 2016; (3) Adopt a resolution to adopt the Initial Study/Mitigated Negative Declaration for the South Milpitas Boulevard Road Extension, Project No. 2016; (4) Authorize the Public Works Director to file a Notice of Determination for South Milpitas Boulevard Road Extension, Project No. 2016, in accordance with CEQA Guidelines Section 15075. (5) Find that the Montague Pedestrian Overcrossing at Penitencia Project meets all the requirements for a Statutory Exemption under Public Resources Code section 21080.25 and is therefore, is statutorily exempt from environmental review under CEQA; and (6) Authorize the Public Works Director to file a Notice of Exemption for Montague Pedestrian Overcrossing, Project No. 2018 in accordance with CEQA guidelines section 15062.

17. Adopt a Resolution Approving the Fiscal Year 2024-25 User and Regulatory Fee Schedule (Staff Contact: Luz Cofresí-Howe, Finance Director, 408-586-3111)

Recommendation: Conduct a public hearing and adopt a resolution approving the Fiscal Year 2024-25 User and Regulatory Fee Schedule.

COMMUNITY SERVICES AND SUSTAINABLE INFRASTRUCTURE (8:30 PM)

18. Presentation from Bay Area Air Quality Management District Staff on the Results of the South Bay Odor Attribution Study (Staff Contact: Christian Di Renzo, 408-586-2602, Public Works Director; and Elaine Marshall, Deputy Public Works Director, 408-586-2603)

Recommendation: Receive a presentation from Bay Area Air Quality Management District Staff on the Results of the South Bay Odor Attribution Study.

ANNOUNCEMENTS AND FUTURE AGENDA ITEMS (9:00 PM)

Members of the City Council or City Manager may make brief announcements at this time. Members of the City Council may also suggest future agenda items. For future agenda items, the City Council shall not debate the topic or engage in discussion but shall simply state a "yes" or "no" as whether to move the item forward. If a majority of the City Council agrees to move the item forward, the City Manager shall place the item on a future agenda.

ADJOURNMENT (9:05 PM)

KNOW YOUR RIGHTS UNDER THE OPEN GOVERNMENT ORDINANCE

Government's duty is to serve the public, reaching its decisions in full view of the public. Commissions and other City agencies exist to conduct the people's business. This ordinance assures that deliberations are conducted before the people and City operations are open to the people's review. For more information on your rights under the Open Government Ordinance or to report a violation, contact the City Attorney's office at Milpitas City Hall, 455 E. Calaveras Blvd., Milpitas, CA 95035
e-mail:mmutalipassi@milpitas.gov / Phone: 408-586-3040

The Open Government Ordinance is codified in the Milpitas Municipal Code as Title I Chapter 310 and is available online at the City's website www.milpitas.gov by selecting the Milpitas Municipal Code link.

Materials related to an item on this agenda submitted to the City Council after initial distribution of the agenda packet are available for public inspection at the City Clerk's office at Milpitas City Hall, 3rd floor 455 E. Calaveras Blvd., Milpitas and on City website. City Council agendas and related materials can be

viewed online: www.milpitas.gov/government/council/agenda_minutes.asp (select meeting date)

APPLY TO SERVE ON A CITY COMMISSION

Commission application forms are available online at www.milpitas.gov or at Milpitas City Hall.
Contact the City Clerk's Office at 408-586-3001 for more information.

If you need assistance, per the Americans with Disabilities Act, for any City of Milpitas public meeting, please call the City Clerk at 408-586-3001 or send an e-mail to CityClerk@milpitas.gov prior to the meeting. You may request a larger font agenda.

April 2024

S	M	T	W	T	F	S
	1	2	3	4	5	6
7	8	9	10	11	12	13
14	15	16	17	18	19	20
21	22	23	24	25	26	27
28	29	30				

Milpitas City Council Calendar
May 2024

June 2024

S	M	T	W	T	F	S
						1
2	3	4	5	6	7	8
9	10	11	12	13	14	15
16	17	18	19	20	21	22
23	24	25	26	27	28	29
30						

Sunday	Monday	Tuesday	Wednesday	Thursday	Friday	Saturday
			1 **1:00 PM**-Santa Clara VTA Monthly Briefing - Northeast Group (CM) **7:00 PM**-Community Advisory Commission (EC)	**2** **5:30 PM**-Santa Clara VTA Board of Directors (CM) **5:30 PM**-Milpitas Chamber of Commerce Board (GB)	**3**	**4**
5	**6** **7:00 PM**-Parks, Recreation & Cultural Resources Commission (HL)	**7** **7:00 PM**-City Council	**8** **7:00 PM**-Silicon Valley Clean Energy Board of Directors (EC) (Cupertino)	**9** **2:30 PM**-Council Subcommittee Meeting: Housing (CM/EC) **4:00 PM**-Santa Clara VTA Policy Advisory Committee (EC) **5:30 PM**-Cities Assoc of SCC Legislative Action Committee (CM) **6:00 PM**-Youth Advisory Commission (HL) **7:00 PM**-Cities Assoc of SCC (CM)	**10**	**11**
12	**13** **4:30 PM**-Economic Development and Trade Commission (CM) [Community Center, Room 7/8]	**14** **4:00 PM**- Milpitas HOPE **5:30 PM**-Special Council Meeting: FY24-25 Budget Study Session [Barbara Lee Senior Center, Room 140/141]	**15**	**16** **10:00 AM**-VTA Congestion Mgmt Prog & Planning (CMPP) (CM) **12:00 PM**-VTA Board of Directors Special Closed Session Meeting (CM) **3:00 PM**-Cities Assoc of SCC Recycling & Waste Reduction Commission (CM) **6:30 PM**-Bay Area Water Supply Conserv Agency (CM) (Burlingame Community Center, Sequoia Room) **7:00 PM**-Public Safety and Emergency Preparedness Commission (HL) [Fire Station #1, Main Street]	**17**	**18**
19	**20** **7:00 PM**-Library and Education Commission (EC) (Milpitas Public Library) **7:00 PM**-Science, Technology & Innovation Commission (GB) [Community Center, Room 7/8]	**21** **6:00 PM**-Closed Session **7:00 PM**-City Council	**22** **7:00 PM**-Planning Commission	**23** **1:00 PM**- SCC Emergency Operational Area Council Meeting (CM) **4:00 PM**-Treatment Plant Advisory Committee (CM) (San Jose)	**24** **11:00AM – 12:00PM**-Eritrea Independence Day Flag Raising Ceremony (Cesar Chavez Plaza)	**25**
26	**27** **Memorial Day – City Observed Holiday** **City Hall Closed**	**28**	**29**	**30** **4:00 PM**-Silicon Valley Regional Interoperability Authority (SVRIA) (GB) (Santa Clara)	**31**	

May 2024

S	M	T	W	T	F	S
			1	2	3	4
5	6	7	8	9	10	11
12	13	14	15	16	17	18
19	20	21	22	23	24	25
26	27	28	29	30	31	

Milpitas City Council Calendar
June 2024

July 2024

S	M	T	W	T	F	S
	1	2	3	4	5	6
7	8	9	10	11	12	13
14	15	16	17	18	19	20
21	22	23	24	25	26	27
28	29	30	31			

Sunday	Monday	Tuesday	Wednesday	Thursday	Friday	Saturday
						1
2	**3** **7:00 PM**-Parks, Recreation & Cultural Resources Commission (HL) **7:00 PM**-Special Arts Commission (EC) [Senior Center, Room 140/141]	**4** **6:00 PM**-Closed Session **7:00 PM**-City Council	**5** **1:00 PM**-Santa Clara VTA Monthly Briefing - Northeast Group (CM) (Santa Clara) **5:30 PM**-Veterans Commission (CM) **7:00 PM**-Community Advisory Commission (EC)	**6** **12:00 PM**-SCC Library JPA Board of Directors (CM) **5:30 PM**-Milpitas Chamber of Commerce Board (GB) **5:30 PM**-Santa Clara VTA Board of Directors (CM)	**7**	**8**
9	**10** **4:30 PM**-Economic Development and Trade Commission (CM)	**11** **5:30 PM**-Special City Council Meeting	**12** **7:00 PM**-Silicon Valley Clean Energy Board of Directors (EC) (Cupertino) **7:00 PM**-Planning Commission	**13** **4:00 PM**-Treatment Plant Advisory Committee (CM) (San Jose) **4:00 PM**-Santa Clara VTA Policy Advisory Committee (EC) **5:30 PM**-CASCC Legislative Action Committee (CM) **6:00 PM**-Youth Advisory Commission (HL) **7:00 PM**-Cities Assoc of SCC (CM)	**14**	**15**
16	**17** **7:00 PM**-Science, Technology, and Innovation Commission (GB)	**18** **6:00 PM**-Closed Session **7:00 PM**-City Council	**19** **6:00 PM**-Energy and Environmental Sustainability Commission (EC)	**20** **3:00 PM**-CASCC Appt: Recycling and Waste Reduction Commission (CM) **5:30 PM**-Measure F Oversight Committee	**21**	**22**
23	**24**	**25** **1:30 PM**-Senior Advisory Commission (CM)	**26** **12:00 PM**-Santa Clara Valley Water District - Water Commission (CM) **5:30 PM**-Cities Assoc. of SCC - Recycling and Waste Reduction Commission (CM) **7:00 PM**-Planning Commission	**27**	**28**	**29**
30						

REGULAR MEETING OF THE MILPITAS CITY COUNCIL

MINUTES

TUESDAY, MAY 7, 2024

The City Council of the City of Milpitas convened on the regular City Council meeting day in a Meeting of the Milpitas City Council on May 7, 2024, in the City Council Chamber, 455 E. Calaveras Blvd, Milpitas, CA, and via teleconference/Zoom webinar.

CALL MEETING TO ORDER by Mayor and ROLL CALL by City Clerk

Mayor Montano called the Regular City Council meeting to order at 7:01 PM. Roll Call was taken by City Clerk Guzzetta.

PRESENT: Mayor Montano, Vice Mayor Chua, Councilmember Lien, Councilmember Phan
ABSENT: Councilmember Barbadillo

PLEDGE OF ALLEGIANCE

Mayor Montano led the pledge of allegiance.

INVOCATION

Vice Mayor Chua provided the invocation.

PRESENTATIONS

Mayor Montano presented proclamations in recognition of Affordable Housing and Building Safety Month, National Mental Health Awareness Month, Older Americans Month, and Distracted Driving Awareness Month.

PUBLIC FORUM

There were the following public speakers:
1. Stephen Balsbaugh
2. Rob Means
3. Vonny Jap
4. Reva Konduru
5. James Luo
6. Voltaire Montemayor
7. Member of the public
8. Loc Nguyen

ANNOUNCEMENT OF CONFLICT OF INTEREST AND CAMPAIGN CONTRIBUTIONS

City Attorney Mutalipassi asked the Mayor and City Councilmembers if they had any personal conflicts of interest. By roll call, there were no conflicts of interest (Absent: Barbadillo). City Attorney Mutalipassi asked the Mayor and City Councilmembers if they had any reportable campaign contributions. By roll call, there were no reportable campaign contributions (Absent: Barbadillo).

READING OF THE CITY COUNCIL CODE OF CONDUCT

Mayor Montano read the City Council Code of Conduct.

APPROVAL OF AGENDA

After discussion, motion: to approve the agenda.

Motion/Second: Vice Mayor Chua/Councilmember Lien
Motion carried by the following:
AYES: Mayor Montano, Vice Mayor Chua, Councilmember Lien, Councilmember Phan
NOES: None
ABSENT: Councilmember Barbadillo

CONSENT CALENDAR

City Manager Thomas acknowledged the MOU between the City and Milpitas Police Officer's Association (MPOA). MPOA President David Morris offered comments on the MOU.

There were no public speakers.

Councilmember Phan asked to pull Item C5 to be heard immediately after the Consent Calendar.

After discussion, motion: to approve the Consent Calendar, pulling Item C5 to be heard immediately following the Consent Calendar.

Motion/Second: Vice Mayor Chua/Mayor Montano
Motion carried by the following:
AYES: Mayor Montano, Vice Mayor Chua, Councilmember Lien, Councilmember Phan
NOES: None
ABSENT: Councilmember Barbadillo

1. Receive City Council Calendar of Meetings for May 2024 (Staff Contact: Suzanne Guzzetta, City Clerk, 408-586-3001)

Received City Council Calendar of Meetings for May 2024.

2. Approve City Council City Council Meeting Minutes of April 16, 2024 (Staff Contact: Suzanne Guzzetta, City Clerk, 408-586-3001)

Approved City Council Meeting minutes of April 16, 2024.

3. Receive the Preview List of Anticipated Items for the Next Regular City Council Meeting (Staff Contact: Suzanne Guzzetta, City Clerk, 408-586-3001)

Received the list of anticipated agenda items for the next regular City Council meeting.

4. Receive and Review the List of Agenda Items Requested by City Councilmembers (Staff Contact: Suzanne Guzzetta, City Clerk, 408-586-3001)

Reviewed the list of items that have been requested by City Councilmembers and provided direction to staff as necessary.

6. Approve and Authorize the City Manager to Execute the Purchase Order with Code 3 Technology for Fire Mobile Computer Replacement (Staff Contact: Daniel Nam, Information Technology Director, 408-586-2712)

Approved and authorized the City Manager to execute the purchase order with Code 3 Technology for

27 Getac ruggedized laptop computers for a total amount not-to-exceed $152,507.45.

7. Approve Amendments to the Subscription and Services Agreement with RideCo for Milpitas SMART (Staff Contact: Jay Lee, Planning Director, 408-586-3077)

(1) Approved amendments to the subscription and services agreement with RideCo for Milpitas SMART; and (2) Authorized the City Manager to execute the amended agreement.

8. Adopt Resolutions Approving the Annual Engineer's Report and Declaring Intention to Levy and Collect Assessments, and Provide Notice of Public Hearing for Landscaping and Lighting Maintenance Assessment District No. 95-1 - McCarthy Ranch (Staff Contact: Michael Silveira, City Engineer, 408-586-3303; and Roberto Alonzo, Public Works Division Manager - Engineering, 408-586-3316)

Adopted **Resolution No. 9319** approving the Annual Engineer's Report, adopted **Resolution No. 9320** declaring its intention to levy and collect assessments, and provide notice of public hearing to be held on June 4, 2024, for Landscaping and Lighting Maintenance Assessment District No. 95-1 - McCarthy Ranch.

9. Adopt Resolutions Approving the Annual Engineer's Report and Declaring Intention to Levy and Collect Assessments, and Provide Notice of Public Hearing for Landscaping and Lighting Maintenance Assessment District No. 98-1 - Sinclair Horizon (Staff Contact: Michael Silveira, City Engineer, 408-586-3303; and Roberto Alonzo, Public Works – Engineering Division Manager, 408-586-3316)

Adopted **Resolution No. 9321** approving the Annual Engineer's Report, adopted **Resolution No. 9322** declaring its intention to levy and collect assessments, and provide notice of public hearing to be held on June 4, 2024, for Landscaping and Lighting Maintenance Assessment District No. 98-1 - Sinclair Horizon.

10. Adopt a Resolution Designating Street Resurfacing 2024-2025, Project No. 4300 to be Funded by California Senate Bill 1 - The Road Repair and Accountability Act of 2017 (Staff Contact: Michael Silveira, City Engineer, 408-586-3303; and Roberto Alonzo, Public Works Division Manager – Engineering, 408-586-3316)

Adopted **Resolution No. 9323** designating Street Resurfacing 2024-2025, Project No. 4300 to be Funded by California Senate Bill 1 - The Road Repair and Accountability Act of 2017.

11. Authorize the City Manager to Accept the CalRecycle Grant and Approve Related Budget Amendment (Staff Contact: Christian Di Renzo, Public Works Director, 408-586-2603; and Elaine Marshall, Deputy Public Works Director, 408-586-2603)

Authorized the City Manager to accept grant funding from CalRecycle's Senate Bill 1383 Local Assistance Grant and approved related budget amendment for revenues in the amount of $217,999.00 for the Solid Waste Fund (Fund 280) for FY 2024-25.

12. Receive an Update on Storm Drain System Emergency Repairs and Improvements at Evans Road and Piedmont Creek and Determine that the Condition Continues to Constitute an Emergency (Staff Contact: Christian Di Renzo, Public Works Director, 408-586-2602)

(1) Received an update on the storm drain system emergency repairs and improvements at Evans Road and Piedmont Creek; and (2) Determined by a four-fifths vote that the condition continues to constitute an emergency.

13. Approve Design for Dixon Landing Public Art Project (Staff Contact: Renee Lorentzen,

Recreation and Community Services Director, 408-586-3409; and Tegan McLane, Assistant Recreation and Community Services Director, 408-586-3212)

Approved artist Lacey Bryant's design for Dixon Landing Park public art mural.

ITEMS PULLED FROM CONSENT CALENDAR

5. Adopt a Resolution Approving a Memorandum of Understanding between the City of Milpitas and Milpitas Police Officers Association (MPOA) Covering the Period of January 1, 2024 through December 31, 2026 (Staff Contact: Kelli Parmley, Human Resources Director, 408-586-3086)

The City Council offered comments and thanks to the Police Department for their service.

There were the following public speakers:
1. Voltaire Montemayor

After discussion, motion: to adopt **Resolution No. 9324** approving a Memorandum of Understanding between the City of Milpitas and Milpitas Police Officers Association (MPOA) covering the period of January 1, 2024 through December 31, 2026.

Motion/Second: Vice Mayor Chua/Councilmember Phan
Motion carried by the following:
AYES: Mayor Montano, Vice Mayor Chua, Councilmember Lien, Councilmember Phan
NOES: None
ABSENT: Councilmember Barbadillo

PUBLIC HEARINGS

14. Conduct a Public Hearing on an Appeal of the Planning Commission's Decision to Deny Conditional Use Permit No. UP23-0013 to Allow for the Retail Sales of Tobacco Products at 1225 Jacklin Road (Staff Contact: Jay Lee, Planning Director, 408-586-3077)

City Manager Thomas introduced the item. Associate Planner Baez presented the report. The appellant, Kareem Al Salahi, addressed the City Council.

Mayor Montano opened the public hearing.

There were the following public speakers:
1. Senkadir
2. Jagdev Singh Bariano
3. Rishi Behan
4. Nazleen Walji
5. Ihaara Walji
6. Charlotte Cardenas
7. Edelmira Ponce
8. Marina Lidtke
9. Venkat
10. James Luo
11. Kuljinder Kaur
12. Loc Nguyen
13. Khalil Barforoshi
14. Ron
15. Dr. Ashok

16. Voltaire Montemayor
17. Member of the public
18. Barbara
19. Kayla Dixon

Mayor Montano closed the public hearing.

The Apellant presented closing remarks.

Councilmember Lien questioned the appellant and Police Chief Hernandez regarding compliance with the General Plan, Zoning Ordinance, and City Standards. Police Chief Hernandez confirmed no significant issues related to the smoke shop were reported.

Vice Mayor Chua raised several concerns regarding the smoke shop including health impacts, second-hand smoke, and the protection of children. Associate Planner Baez detailed the proximity of the shop to nearby schools and detailed the restrictions. Director Lee explained the city's smoke-free ordinance and highlighted the applicant's agreement to enforce a no-smoking policy on-site. Further discussion involved the police department recommendations including ensuring clear line-of-sight for officers, the installation of video security cameras, and the prohibition of the unregulated substance Kratom due to its potential health risks. Finally, issues regarding the shop's signage and its impact on community image were addressed, with the applicant showing willingness to change the business name and signage if required by the council.

Councilmember Phan expressed his initial uncertainty about the project. He posed questions to the applicant, acknowledging the importance of the business as a source of income. After acknowledging the respectful and fact-based arguments of supporters, he noted he could conditionally support upholding the appeal while highlighting that the conditional use permit could be revoked if conditions were not met.

Vice Mayor Chua asked if a condition could be included to have the City Council review the conditional use permit at six months and then a year after. City Attorney Mutalipassi confirmed that conditional use permits could be reviewed at any time, but it could be added as a condition of issuing the permit. He outlined the council's three options for action: uphold the appeal and issue the CUP as presented, deny the appeal and deny the CUP, or uphold the appeal with additional conditions.

Mayor Montano asked questions of the appellant and staff regarding the shop location, products sold, and number of smoke shops in the city. She expressed appreciation for the appellant's willingness to comply with suggested conditions, and spoke in support of Vice Mayor's suggestion adding the six-month and one year reviews of the CUP.

Vice Mayor Chua made a motion: to consider the project to be categorically exempt from environmental review under the California Environmental Quality Act (CEQA) pursuant to CEQA Guidelines Sections 15301 (Existing Facilities) and as a separate and independent basis, CEQA Guidelines Section 15183 (Projects Consistent with a Community Plan, General Plan, or Zoning); and to adopt **Resolution No. 9325** upholding the appeal and overturning the Planning Commission’s decision to deny Conditional Use Permit No. UP23-0013 to allow for the retail sales of tobacco products within an existing 870-square-foot tenant space of a 9,960-square-foot multi-tenant commercial building located on a 0.9-acre site located at 1225 Jacklin Road within the C1 Neighborhood Commercial Zoning District with additional conditions of approval including prohibiting smoking and on-site use of products, limiting business hours to 10 AM to 10 PM daily, and including review of the permit at 6 months and 1 year.

Vice Mayor Chua also suggested the City Manager look into a tobacco ordinance and to enhance the

smoking ordinance to prohibit smoking in parking lots. She also advised the appellant to consider double doors for the establishment.

City Attorney Mutalipassi restated the motion.

Councilmember Phan seconded the motion.

Motion/Second: Vice Mayor Chua/Councilmember Phan
Motion carried by the following:
AYES: Mayor Montano, Vice Mayor Chua, Councilmember Lien, Councilmember Phan
NOES: None
ABSENT: Councilmember Barbadillo

ANNOUNCEMENTS AND FUTURE AGENDA ITEMS

City Manager Thomas introduced the new Finance Director, Luz Cofresi-Howe, announced the upcoming budget meeting, presented a video on the recent City Earth Day event, and offered an update on the status of pickleball.

Vice Mayor Chua made the following requests:
1. Look into establishing a tobacco ordinance for the city of Milpitas. There was consensus to add the item to the prioritization list (Vote: 4-0-1. Absent: Barbadillo).
2. Explore enhancing the smoking ordinance to include prohibitions in parking lots. Mayor Montano asked to also include parks in the prohibition. There was consensus to add the item to the prioritization list (Vote: 4-0-1. Absent: Barbadillo).
3. Consider using banners to promote local businesses in Milpitas. There was consensus to add the item to the prioritization list (Vote: 4-0-1. Absent: Barbadillo).

Vice Mayor Chua also congratulated Public Information Officer Charmaine Angelo on receiving an award from the California Public Information Officer's Association.

Mayor Montano made the following requests:
1. Conduct a traffic study on Escuela Parkway to address circulation concerns. There was consensus to add the item to the prioritization list (Vote: 3-1-1. No: Phan. Absent: Barbadillo).
2. Investigate the feasibility of hosting night food truck events to revitalize Main Street. There was consensus to add the item to the prioritization list (Vote: 3-1-1. No: Phan. Absent: Barbadillo).

Mayor Montano also recognized the Milpitas High School Aerospace Club for placing fifth in a preliminary national competition.

ADJOURNMENT

The meeting was adjourned at 9:36 PM.

Draft meeting minutes submitted by City Clerk, Suzanne Guzzetta

TENTATIVE CITY COUNCIL AGENDA ITEM LIST

as of 5/16/2024

June 4, 2024 – Regular Meeting

CLOSED SESSION

- Labor Relations

INVOCATION (Councilmember Lien)

PRESENTATION

CONSENT CALENDAR

1. Receive City Council calendar for June 2024 (City Clerk)
2. Approve City Council Meeting minutes of May 14 and 21, 2024 (City Clerk)
3. Preview list of items for June 18, 2024 (City Clerk)
4. Councilmember Request List (City Clerk)
5. Resolution Calling the Election (City Clerk)
6. VTA BPAC Appointment (City Manager)
7. FY2023-24 3rd Quarter Financial Status Report for the Quarter Ended March 31, 2024 (Finance)
8. Approve Accounts Receivable Write-offs for Fiscal Year Ending June 30, 2024 (Finance)
9. PRV Relocation Contract Award for Fire Station No. 1 (Public Works)
10. 1490 S. Park Victoria Drive Improvement Agreement (Public Works / Engineering)
11. Sunnyhills Turnout Valve Purchase (Public Works / Engineering)

PUBLIC HEARINGS

12. Adoption of FY 2024-25 Operating Budget (Finance)
13. 675 Trade Zone Community Facilities District Annexation (Public Works / Engineering)
14. LLMD District No. 95-1 (McCarthy Ranch) for Fiscal Year 2024-25 (Public Works / Engineering)
15. LLMD District No. 98-1 (Sinclair Horizon) for Fiscal Year 2024-25 (Public Works / Engineering)
16. Adoption of Phase 1 Comprehensive Zoning Update (Planning)

MILPITAS CITY COUNCIL
AGENDA ITEM REQUESTS

OPEN ITEMS				
Request No.	**Topic**	**Submitted by:**	**Date Requested**	**STATUS and/or DATE scheduled on City Council meeting agenda:**
1	Investigate the feasibility of hosting night food truck events to revitalize Main Street	Montano	5/7/2024	This item will be considered as part of the next City Council prioritization discussion
2	Conduct a traffic study on Escuela Parkway to address circulation concerns	Montano	5/7/2024	This item will be considered as part of the next City Council prioritization discussion
3	Consider using banners to promote local businesses in Milpitas	Chua	5/7/2024	This item will be considered as part of the next City Council prioritization discussion
4	Explore enhancing the smoking ordinance to include prohibitions in parking lots	Chua	5/7/2024	This item will be considered as part of the next City Council prioritization discussion
5	Look into establishing a tobacco ordinance for the city of Milpitas	Chua	5/7/2024	This item will be considered as part of the next City Council prioritization discussion
6	Explore the possibility of augmenting the Planning Commission stipend	Barbadillo	4/16/2024	This item will be considered as part of the next City Council prioritization discussion
7	Revisit the solicitation ordinance for potential improvements and reintroduction	Barbadillo	4/16/2024	This item will be considered as part of the next City Council prioritization discussion
8	Explore changing or enhancing the focus of the community advisory commission to add housing	Chua	4/2/2024	This item will be considered as part of the next City Council prioritization discussion
9	Honor military residents by selecting several at one given month during the year for recognition with banners displayed on Main Street	Chua	3/19/2024	This item will be considered as part of the next City Council prioritization discussion
10	Explore options for revisions to ADU ordinance	Chua	3/5/2024	This item will be considered as part of the next City Council prioritization discussion
11	Explore an Arts Month Event where commissioners can exhibit their Art	Chua	3/5/2024	This item will be considered as part of the next City Council prioritization discussion

ACTIVE ITEMS				
Request No.	**Topic**	**Submitted by:**	**Date Requested**	**STATUS and/or DATE scheduled on City Council meeting agenda:**
12	Request that the Arts Commission explore alternatives for future of statue in front of City Hall	Phan	1/30/2024	An update was included in the February 20th Council prioritization reprt.
13	Update the Commissioner Handbook to include an option for outgoing commissioners to make presentations to other commissions	Chua	1/23/2024	An update was included in the February 20th Council prioritization reprt.
14	Workshop for retailers focusing on best practices and safety with plans for quarterly sessions	Chua	1/23/2024	An update was included in the February 20th Council prioritization reprt.
15	Explore possibility of naming the County library on Main Street	Phan	1/23/2024	An update was included in the February 20th Council prioritization reprt.
16	Consideration of the 20% Low Income Below Market Rate Housing	Montano	12/5/2023	This item was approved to move forward as part of the February 20th Council prioritization
17	Bring back Bingo and the Tour at the Senior Center	Chua	11/7/2023	An update was included in the February 20th Council prioritization reprt.
18	Referral for utility infrastructure cost on Main Street from Carlo to Corning Streets	Montano	10/17/2023	An update was included in the February 20th Council prioritization reprt.
19	Consider a possible ordinance or policy regarding solicitations at home	Barbadillo	10/3/2023	An update was included in the February 20th Council prioritization reprt.

NOTE: Deferred and Completed Items are not listed

MILPITAS CITY COUNCIL
AGENDA ITEM REQUESTS

ACTIVE ITEMS				
Request No.	**Topic**	**Submitted by:**	**Date Requested**	**STATUS and/or DATE scheduled on City Council meeting agenda:**
20	Main Street International Festival	Lien	10/3/2023	An update was included in the February 20th Council prioritization reprt.
21	Have the Police Chief direct staff to complete an analysis in partnership with the County to	Chua	9/5/2023	An update was included in the February 20th Council prioritization reprt.
22	Explore taking steps towards becoming a Charter City	Phan	9/5/2023	An update was included in the February 20th Council prioritization reprt.
23	Human Resources Director to conduct a job fair specific to the job openings at City Hall	Chua	5/2/2023	An update was included in the February 20th Council prioritization reprt.
24	Pickleball Pilot Project	Chua	2/28/2023	An update was included in the February 20th Council prioritization reprt.
25	Main Street Infrastructure Projects	Montano	2/28/2023	An update was included in the February 20th Council prioritization reprt.
26	Main Street Flooding at Library	Chua	2/28/2023	An update was included in the February 20th Council prioritization reprt.
27	Satellite Consulate Office	Montano	2/28/2023	An update was included in the February 20th Council prioritization reprt.
28	Have the City look into the possibility of a Citywide Senior Discount	Barbadillo	2/7/2023	An update was included in the February 20th Council prioritization reprt.
29	City Manager to look into defining either a standalone teen center or updating information to	Chua	9/20/2022	An update was included in the February 20th Council prioritization reprt.
30	Discuss converting vacant lot that was a basketball court into a community garden at Vasona and Adobe	Montano	8/16/2022	An update was included in the February 20th Council prioritization reprt.
31	City Manager look into implementing a workshop for small businesses on the bidding process for projects in the city	Chua	8/9/2022	An update was included in the February 20th Council prioritization reprt.
32	Quarterly or Monthly crime statistics on Homekey Project	Chua	6/7/2022	An update was included in the February 20th Council prioritization reprt.
33	Memorial Plaque in honor of youth skateboarder that passed away	Montano	6/7/2022	An update was included in the February 20th Council prioritization reprt.
34	Evaluate reopening the childcare center with a non-profit organization running the center	Montano	2/1/2022	An update was included in the February 20th Council prioritization reprt.
35	Staff to look into mural Art on Great Mall Parkway on the VTA owned Light rail pillars	Montano	11/16/2021	An update was included in the February 20th Council prioritization reprt.
36	Have a picture of Albert Vogel Sr. put up in the Senior Center	Montano	10/19/2021	An update was included in the February 20th Council prioritization reprt.
37	Include a bust of Maria Lemire on the Mural in front of the Senior Center	Montano	8/17/2021	An update was included in the February 20th Council prioritization reprt.
38	Consider Community Museum and Park on Main St.	Phan	8/20/2019	Discussions with the property owner of this site are ongoing.

NOTE: Deferred and Completed Items are not listed

CITY OF MILPITAS
AGENDA REPORT
(AR)

Item Title:	**Authorize the Reallocation of Money Appropriated in the FY23/24 Budget from the Legacy Special Council Provider to the Current Special Council Provider and Approve and Authorize the City Attorney and City Manager to Execute an Amendment to the Contract with Meyers Nave for Contracted Outside Counsel (Staff Contact: Michael Mutalipassi, City Attorney, 408-586-3040)**
Category:	Consent Calendar-Leadership and Support Services
Meeting Date:	5/21/2024
Recommendation:	(1) Authorize the reallocation of money appropriated in the FY-23/24 budget from the legacy special council provider to the current special council provider and approve; (2) Approve an amendment to the contract with Meyers Nave for contracted outside counsel in the amount of $90,000; and (3) Authorize the City Attorney and City Manager to execute the amended agreement.

BACKGROUND:
One of the tasks given by the City Council to the Office of the City Attorney ("CAO") has been to transition outside counsel and special project work from the previous legacy firm to new firms. The CAO has worked towards this goal by bringing several functions in house, including gun violence litigation, public records act support, and land use. During the budgeting process, the CAO had anticipated a slower transition from the previous firm to the currently used firms, Meyers Nave; Colantuono Highsmith Whatley; and Mandell Municipal Counseling. The faster than anticipated transition requires a realignment of some of the outside counsel contracts, though does not require the appropriation of any new funds.

ANALYSIS:
The CAO is currently contracted with Meyers Nave for $150,000 for outside counsel and special counsel services. Meyers Nave has provided services including arbitration before the California Public Relations Board ("PERB"), grievances from labor unions, an extensive human resources investigation, special public records act projects, and ongoing litigation. Much of this work had previously been done by the former outside counsel. As a result of the successful transition, this work is now being done by Meyers Nave. The Meyers Nave contract will need to be amended to reflect this change, though no new money will need to be appropriated.

POLICY ALTERNATIVE(S):
Alternative: To not amend the Meyers Nave contract for increased services.
Pros: None.
Cons: Will not meet Council's transition goals.
Reason not recommended: Will not meet the Council's transition goals.

FISCAL IMPACT:
There is sufficient funding in FY 2023-24 City Attorney Office operating budget to absorb this amended contract in the amount of $90,000.

CALIFORNIA ENVIRONMENTAL QUALITY ACT (CEQA):
The action is an organizational or administrative activity of the City government that will not result in direct or indirect physical changes in the environment and is not a project pursuant to Cal. Code of Regs., tit. 14, 15378.

RECOMMENDATION:

(1) (1) Authorize the reallocation of money appropriated in the FY-23/24 budget from the legacy special council provider to the current special council provider and approve;
(2) (2) Approve an amendment to the contract with Meyers Nave for contracted outside counsel in the amount of $90,000; and

(3) Authorize the City Attorney and City Manager to execute the amended agreement.

CITY OF MILPITAS
AGENDA REPORT
(AR)

Item Title:	**Confirm Chamber of Commerce Appointment to the Economic Development and Trade Commission (Staff Contact: Suzanne Guzzetta, City Clerk, 408-586-3004)**
Category:	Consent Calendar-Leadership and Support Services
Meeting Date:	5/7/2024
Recommendation	Receive the Chamber of Commerce recommendation for appointment to the Economic Development and Trade Commission and confirm appointment.

Background:
The City of Milpitas has 13 Commissions (including the Measure F Oversight Committee), with members confirmed by the City Council. The Commissions advise the Milpitas elected officials on a variety of community interest and policy areas. Commissioner appointments and removals are governed by various sections of the California Government Code, Milpitas Municipal Code, and the adopted Milpitas Commissioner Handbook and By-Laws.

Certain commission seats have specific requirements to be filled including recommendation for appointment by outside organizations. One seat on the Economic Development and Trade Commission is designated as a Chamber of Commerce representative seat. The Milpitas Chamber of Commerce appoints a representative and that appointment is confirmed by the Milpitas City Council.

Analysis:
Appointments are as follows:

Economic Development and Trade Commission:
1. Confirm appointment of Larry Ciardella to the Chamber of Commerce representative seat with a term ending April 2027

Fiscal Impact:
There is no fiscal impact associated with this item.

CEQA:
The action is continuing administrative or maintenance activity and is not a project pursuant to Cal. Code Regs., tit. 14, § 15378.

Recommendation:
Receive the Chamber of Commerce recommendation for appointment to the Economic Development and Trade Commission and confirm appointment.

Attachments:
(a) Chamber of Commerce Appointment Email

Suzanne Guzzetta

From: sguzzetta@milpitas.gov
Subject: FW: Monthly City & Chamber Meeting

From: Jennifer Cullenbine [redacted]
Sent: Tuesday, April 2, 2024 1:30 PM
To: Michael Thomas <mthomas@milpitas.gov>
Cc: [redacted] Kelly Yip Chuan [redacted] Milpitas Chamber [redacted] Alex Andrade <aandrade@milpitas.gov>; Margaret Tamisiea <mtamisiea@milpitas.gov>
Subject: Re: Monthly City & Chamber Meeting

CAUTION: EXTERNAL SENDER
This email originated from outside the organization. Do NOT click links or open attachments unless you recognize the sender and know the content is safe. Report suspicious messages to the IT Helpdesk.

Hi Michael,

So sorry we haven't gotten back to you about rescheduling the meeting. Unfortunately, I don't have any openings to offer (April is the Tree's month for Budgeting and Finance meetings.)

Question for you... the Chamber has chosen Larry Ciardello to represent us on the EDTC Commission, what is the next step?

Thank you.

Yours in kindness,
Jenn
Jennifer (Cullenbine) Pietrasik,
Founder, CEO & Queen Elf
The Family Giving Tree
[redacted]
www.familygivingtree.org
Sobrato Center for Nonprofits
606 Valley Way, Milpitas, CA 95035
Pronouns: she/her/hers ALLY

CITY OF MILPITAS
AGENDA REPORT
(AR)

Item Title:	**Summary of 2024 Earmark Requests (Staff Contact: Matt Cano, Assistant City Manager, 408-586-3012)**
Category:	Consent Calendar-Leadership and Support Services
Meeting Date:	5/21/2024
Recommendation:	Accept the report outlining the City of Milpitas 2024 State and Federal Earmark Requests.

BACKGROUND:

On May 18, 2021, the City Council approved the Legislative Advocacy Policy (Attachment 1). The Policy includes Legislative Guiding Principles and establishes clear guidelines for advancing City goals and positions through legislative review and advocacy at the regional, state, and federal levels of government and provides guidance for City officials who serve on regional, state, and national boards, committees, and commissions when they are asked to review public policy matters and issues.

On September 6, 2022, the Mayor and City Council directed staff to issue a request for proposals for Federal and State legislative advocacy services. In January 2023, the City contracted with Kiley & Associates for these services; the primary areas of focus for this contract include:

- Tracking pending legislation and issues that could be impactful or important to the City;
- Advocating or opposing legislation that significantly impacts the City; and
- Engaging with State and Federal agencies to expedite reimbursement for expenditures, clarify administrative rulings, advocate for funding requests, etc.

Kiley & Associates specializes in advocacy at the Federal level, and has partnered with the firm of Gonsalves & Sons to provide the City with specific advocacy and expertise at the State level.

Legislation and issues of interest are brought to the City's attention through a variety of sources including the League of California Cities, National League of Cities, Cities Association of Santa Clara County, City Councilmembers, legislators, city staff, community members, and professional or governmental organizations. Per the adopted Council Policy, all legislation or issues of interest shall be referred to the City Manager's Office.

The June 6, 2023 City Council meeting included a status of the one-time funding ("earmark") requests that the City made to State and Federal representatives in calendar year 2023. An update on the status of these requests is included in the analysis section of this Agenda Report.

The September 19, 2023 City Council meeting included a status of legislative advocacy positions taken by the City during the 2023 legislative session. A summary of the final result of the 2023 legislation on which the City took a position is included in the analysis section of this report.

On January 12, 2024, in alignment with City Council policy, Mayor Carmen Montano conveyed a letter to Federal and State legislative representatives indicating key projects and programs in the City which may be eligible for State and Federal earmarks during 2024. A copy of the letter sent to State Assemblymember Alex Lee is included as Attachment 2 to this report. Similar letters were also sent to State Senator Aisha Wahab, Federal Representative Ro Khanna, State Senator Alex Padilla and State Senator Laphonza Butler.

The February 20, 2024 City Council meeting included a status of pending earmark requests provided to State and Federal representatives, as well as a summary of the final results of bills on which the City of Milpitas took a position during the 2023 legislative season.

ANALYSIS:
This report provides an update on earmark requests submitted to the City of Milpitas Federal and State representatives for potential funding in the upcoming State and Federal budget process.

Most years, earmark funding is available at the State and Federal levels. In the 2023 legislative session, the City received $5.5 million in earmark funding as follows:

1. Milpitas SMART Program ($1.6 million from State of California)
2. Main Street Infrastructure ($500,000 from the Federal Government).

The below table provides information on which project earmark requests were submitted to each representative. Different projects were submitted to each representative based on a combination of feedback from the offices of the representatives, the City's legislative consultant and City staff review and analysis.

Project Name	United States Senator Laphonza Butler	United States Senator Alex Padilla	United States Representative Ro Khanna	State Senator Aisha Wahab	State Senator Alex Lee*
Milpitas Sports Center Bleachers Replacement	✓				✓
Fire Department Urban Search & Rescue Vehicle	✓	✓	✓	✓	✓
Milpitas Community Center Resiliency Project	✓	✓		✓	✓
Milpitas Main Street Revitalization	✓	✓	✓	✓	✓
Sandalwood Park Rehabilitation	✓				✓
Calaveras Road Widening		✓	✓		✓
Cardoza Park Softball Fields					✓

**It should be noted State Senator Alex Lee's Office did not have a formal process for funding requests. However, a letter dated January 12, 2024 was sent to Assemblymember Alex Lee's office which listed all the above projects. As a follow up to this letter, staff indicated to State Senator Lee's office that Main Street Revitalization is the top priority for the City amongst the above projects.*

Staff has received preliminary feedback from State representatives that State earmarks likely will not be available this year due to the budget shortfall. Additionally, it may be several months until any updates are provided on the status of these earmark requests. However, staff will continue to check on the status of these requests on a regular basis and will keep the Mayor and City Council informed of any updates.

FISCAL IMPACT:
Any fiscal impact will be identified when, and if, the implementation of a particular legislation requires Council approval or funding. This would typically be as part of the City's annual budget approval process.

California Environmental Quality Act (CEQA):
The action is an organizational or administrative activity of the City government that will not result in direct or indirect physical changes in the environment and is not a project pursuant to Cal. Code of Regs., tit. 14, § 15378.

RECOMMENDATION:
Accept the report outlining the City of Milpitas' 2024 State and Federal Earmark Requests.

ATTACHMENT(S):
(a) Legislative Advocacy Policy and Legislative Guiding Principles

CITY OF MILPITAS

Revision	Date
Original	5/18/2021

CITY COUNCIL POLICY

Policy No: 1-2	**LEGISLATIVE ADVOCACY POLICY**	**Effective Date:** 5/18/2021
Revision No: N/A	**Policy Administrator:** City Manager	**Next Review Due:** Click or tap to enter a date.
Related Policies and Procedures: Click or tap here to enter text.	**Approved by:** City Council, 5/18/2021, Item # C9: 5-0 vote	**Date Approved:** 5/18/2021

1. PURPOSE

1.1. To establish clear guidelines for advancing City goals and positions through legislative review and advocacy at the regional, state, and federal levels of government and to provide guidance for City officials who serve on regional, state, and national boards, committees, and commissions when they are asked to review public policy matters and issues.

2. POLICY

2.1. This policy outlines the guiding principles and process to enable a comprehensive review of legislation affecting the City of Milpitas, seek Council's position on proposed legislation, and to make the City's position known.

2.2. All legislative reviews shall be made on the basis of the effect on the City and the community as a whole, and taking into account existing City positions, policies, or goals.

2.3. The City shall support the legislative positions of the Cities Association of Santa Clara County, League of California Cities, and the National League of Cities, on priority bills that benefit the City of Milpitas.

2.4. The City shall adopt Legislative Guiding Principles (LGP) based on approved Council Priority Areas, the adopted General Plan, the Economic Development Strategy, and other Council approved master plans and strategic plans.

2.5. On an annual basis, the LGP shall be updated as needed, and shall be approved by the City Council at the beginning of the calendar year.

3. DEFINITIONS

3.1. The following definitions are provided solely as a guide to assist in the application of this policy and may be subject to change.

1.1.1. Department – Includes all City departments and offices

1.1.2. Economic Development Strategy – A five year strategy document adopted by the City Council in May 2020

1.1.3. General Plan – A comprehensive planning document adopted by the Council in March 2021

1.1.4. Legislative Advocacy – A position of support or opposition to proposed legislation
1.1.5. Legislative Guiding Principles – Principles adopted on an annual basis by the City Council to guide the City's position on proposed legislation
1.1.6. Milpitas Municipal Code – Codification of the General Ordinances of Milpitas

4. PROCEDURE

4.1. Legislation and issues of interest are brought to the City's attention through several means: League of California Cities, National League of Cities, Cities Association of Santa Clara County, Councilmembers, legislators, City staff, community members, and professional or governmental organizations. All legislation or issues of interest shall be referred to the City Manager's Office.

4.2. City Manager's Office (CMO) shall review the proposed legislation and, if warranted, request assistance from the City Attorney and/or from one or more departments.

4.3. The process for evaluation and action related to proposed legislation of particular interest to the City shall be as follows:

1.1.1. CMO/Department shall evaluate the proposed bill for its impact on Milpitas, recommend a position and potential action, and draft a position statement or support/opposition letter.
1.1.2. If Council has previously adopted a policy directly relevant to the proposed legislation or if the proposed legislation is generally consistent with the City's Legislative Guiding Principles, the Mayor or City Manager may sign a letter supporting or opposing legislation on behalf of the City as further detailed below.
1.1.3. If there is no Council policy relative to the legislation, the issue is politically controversial, or there is significant community interest in the issue, the proposed legislation, including a recommendation to support, remain neutral, or oppose the legislation, will be brought to Council for consideration.
1.1.4. Letters and other communications expressing the City's position on legislation will bear the signature of the Mayor in accordance with the Milpitas Municipal Code. If the legislation will mainly impact the City's operations, the communication may be signed by the City Manager or designee.
1.1.5. In order to keep the City Council informed of all City communications on legislation, copies of the letter or summary of actions will be distributed to the City Council as information items.

4.4. Quarterly legislative updates on items of interest will be provided to the City Council.

CITY OF MILPITAS – LEGISLATIVE GUIDING PRINCIPLES

1. **Protect Local Control**
   The City values its ability and authority to exercise local control, enable excellent public services and protect andenhance the quality of life for Milpitas residents and businesses. The City supports efforts to streamline regulations that benefit the administration of the City and opposes efforts that erode the City's authority to controlits own affairs.

2. **Support Efforts to Keep Milpitas Safe**
   The City supports legislation and policies that enable local officials to access resources to provide quality police, fire, emergency management, emergency medical services, youth violence prevention initiatives, and to engagethe community in its own safety.

3. **Support Efforts to Create Affordable Housing**
   The City supports legislation and policies that enable local officials to access resources to support the creation of affordable housing and to strive for a balance of jobs and housing in each city across the region.

4. **Support City's Vision for Strategic, Sustainable, and Smart Growth**
   The City strives to foster economic development, including planning and implementation of regional transportationand traffic congestion relief projects. The City supports legislation and policies that support local initiatives to develop or redevelop the community to strengthen the local and regional economy, to accommodate local workers' housing needs in places close to transit and jobs, and to continually improve services provided to the community.

5. **Protect and Increase Local Funding, No Unfunded Mandates**
   The City opposes legislation, policies, or budgets that have negative impacts on City services, revenues or costs.The City supports efforts that protect and enhance local governments' revenues, maximize access to State and Federal funding sources, and increase local funding flexibility including legislation that allows the City to recover costs related to state and federal mandates.

6. **Pursue or Retain Federal and State Funding for Key Efforts**
   In order to support the City's efforts and key policies to provide quality services, affordable housing, transportation, and public infrastructure for its residents and businesses, and to fund the needed strategic supportservices, it is necessary that the federal and state governments act as partners with local government and provide appropriate levels of funding for these City and regional efforts.

7. **Support and Promote Inclusive Communities**
   The City values diversity and recognizes all residents, including immigrants, as valuable contributors to ourcommunity's success. Support legislation that helps our residents be safe, healthy, and able to thrive, whileproviding opportunities to actively engage in civic, cultural, and economic life.

8. Promote Livability and Environmental Stewardship

The City values a sustainable quality of life in an urban environment. The City supports legislation and policies that emphasize sustainable development; improve environmental standards and the regulatory process; provideincentives and financial support for preservation of natural resources; promote sustainable energy and water policies; and support efforts to mitigate odor issues.

9. Promote Investment in Infrastructure

The City supports legislation and policies that promote investing in the maintenance and rehabilitation of aginginfrastructure and build system capacity expansion in a smart and sustainable manner.

CITY OF MILPITAS
AGENDA REPORT
(AR)

Item Title:	**Adopt a Resolution Accepting Public Improvements and Approving a Bond Reduction for the RCD Housing Project Located at 355 Sango Court (Staff Contact: Michael Silveira, City Engineer, 408-586-3303; and Roberto Alonzo, PW Division Manager – Engineering, 408-586-3316)**
Category:	Consent Calendar-Community Development
Meeting Date:	5/21/2024
Recommendation:	Adopt a resolution granting acceptance of the completed public improvements for the RCD Housing Project as shown on Public Improvement Plans No. 2-1386; and approve a reduction in the faithful performance bond to $396,275.75, which is 25% of the security's original value for the public improvements construction cost, which will be in effect for the duration of the warranty period; and grant authorization to the City Engineer to release the remaining portion of the performance bond after the one-year warranty period without further City Council action provided all required warranty work is completed to the satisfaction of the City Engineer.

BACKGROUND:

On February 1, 2022, the City Council approved an Improvement Agreement with Sango Court, L.P. ("Developer") for the RCD Housing Project located at 355 Sango Court ("Project") within the Metro Specific Plan area. Public improvements constructed along Sango Court by the Project includes roadway, curb and gutters, sidewalk, driveway aprons, storm water treatment facilities, 8-inch recycled water main, utility service laterals, streetlights, landscaping, and other miscellaneous items of work. The Project has now been completed.

ANALYSIS:

The Developer has successfully completed all required public improvements for the Project in accordance with the approved Public Improvement Plans No. 2-1386. The public improvements are now ready for acceptance by the City Council and commencement of the 1-year warranty period is to start. Staff recommends the City Council adopt a resolution granting acceptance of the public improvements, and to approve a reduction of the performance bond to $396,275.75, which is 25% of the security's original value, and grant authorization to the City Engineer to release the performance bond after the one-year warranty period without further City Council action provided all required warranty work is completed to the satisfaction of the City Engineer.

POLICY ALTERNATIVE(S):

Alternative: Not approve resolution granting acceptance of public improvements including the reduction of the performance bond.

Pros: None

Cons: Not granting acceptance of public improvements would limit public use of improvements and does not promote orderly completion and closeout of the Project and would conflict with the City's obligation under the Project Improvement Agreement.

Reason for Not Recommending: Granting acceptance of the completed public improvements would allow public use of the improvements and allows for the completion and closeout of the Project as required by the Project Improvement Agreement. Staff recommends the City Council adopt the resolution granting acceptance of public improvements.

FISCAL IMPACT:
Public Improvements completed as part of this project will be perpetually owned and maintained by the City following acceptance by the City Council and completion of the 1-year warranty period. The Public Works Department will be responsible for maintenance of the improvements. Any required additional funding for ongoing maintenance will be requested through future budget appropriations as the Council adopts the annual operating budget.

CALIFORNIA ENVIRONMENTAL QUALITY ACT (CEQA):
Granting acceptance of public improvements and reducing faithful performance bond for public improvements are not considered projects under CEQA as there will be no direct or reasonably foreseeable indirect physical change in the environment. Further, at the time the City Council approved the entitlements for the project through an initial environmental assessment, staff determined that an Addendum to the Transit Area Specific Plan (SCH# 2006032091) pursuant to Section 15164 of the CEQA Guidelines was the appropriate CEQA document given the changes to the General Plan, Specific Plan and Zoning Code. The Addendum demonstrated that there were no substantial changes in the environment because the project would reduce the overall development intensity. On May 23, 2018, the Planning Commission recommended to City Council to approve the Addendum to the EIR prepared for the TASP. On June 12, 2018, the City Council adopted a Resolution Adopting the Addendum to the previously certified Transit Area Specific Plan Environmental Impact Report prepared for the project.

RECOMMENDATION:
Adopt a resolution granting acceptance of the completed public improvements for the RCD Housing Project as shown on Public Improvement Plans No. 2-1386; and approve a reduction in the faithful performance bond to $396,275.75, which is 25% of the security's original value for the public improvements construction cost which will be in effect for the duration of the warranty period and grant authorization to the City Engineer to release the remaining portion of the performance bond after the one-year warranty period without further City Council action provided all required warranty work is completed to the satisfaction of the City Engineer.

ATTACHMENT(S):
(a) Resolution

RESOLUTION NO. _____

A RESOLUTION OF THE CITY COUNCIL OF THE CITY OF MILPITAS APPROVING ACCEPTANCE AND REDUCING PERFORMANCE BOND OF RCD HOUSING PROJECT AND GRANTING AUTHORIZATION TO THE CITY ENGINEER TO RELEASE THE PERFORMANCE BOND AFTER THE ONE-YEAR WARRANTY PERIOD

WHEREAS, the City Council of the City of Milpitas on February 1, 2022 approved the plans and specifications for the RCD Housing Project ("Project") to be completed by Sango Court, L.P. as part of its residential development on 355 Sango Court; and

WHEREAS, the City of Milpitas has heretofore entered into an improvement agreement on February 1, 2022 with Sango Court, L.P., for the RCD Housing Project; and

WHEREAS, Sango Court, L.P., as Principal, and Philadelphia Indemnity Insurance Company, as Surety, executed and posted a certain Performance Bond Number PB00499800550 conditioned upon the faithful performance of the provisions of said improvement agreement and upon the faithful performance of all improvement work required thereunder; and

WHEREAS, said public improvements for the RCD Housing Project have been completed and the improvement agreement provides that the security shall extend for a period of one year after the date of acceptance of said improvements to cover the warranty period of said improvements under said agreement; and

WHEREAS, the City Council is willing to consent to a reduction in the penal sum of said security during said one-year warranty period; and

WHEREAS, the City Engineer of the City of Milpitas has made a final inspection of said improvements for the RCD Housing Project and recommends that the City Council of the City of Milpitas accept the same as constructed in accordance with the approved plans and specifications.

NOW, THEREFORE, the City Council of the City of Milpitas hereby finds, determines, and resolves as follows:

1. The City Council has considered the full record before it, which may include but is not limited to such things as the staff report, testimony by staff and the public, and other materials and evidence submitted or provided to it. Furthermore, the recitals set forth above are found to be true and correct and are incorporated herein by reference.
2. Those certain public improvements constructed as part of the RCD Housing Project, are hereby accepted as constructed in accordance with the approved plans and specifications upon recommendation of the City Engineer of the City of Milpitas.
3. The penal sum of the faithful performance bond securing said improvements may be reduced to the sum of $396,275.75, upon request of Principal and Surety, with said penal sum as reduced to apply from the date of completion and acceptance of said improvements and to extend for the balance of the term of one year of said security. Provided, however, that nothing herein contained shall in any way be deemed to be a waiver, release or relinquish by City of any obligations imposed upon the developer or his surety, or sureties, by law or by the above referend public improvement agreement, save and except as expressly set forth herein.
4. The City Council grants authorization to the City Engineer to release the performance bond after the one-year warranty period without further City Council action provided all required warranty work is completed to the satisfaction of the City Engineer.

PASSED AND ADOPTED this _____ day of _____, 2024, by the following vote:

AYES:

NOES:

ABSENT:

ABSTAIN:

ATTEST:

_____
Suzanne Guzzetta, City Clerk

APPROVED:

_____
Carmen Montano, Mayor

APPROVED AS TO FORM:

_____
Michael Mutalipassi, City Attorney

CITY OF MILPITAS
AGENDA REPORT
(AR)

Item Title:	**Receive and Approve the Calendar Year 2023 Controlled Equipment Annual Report (Staff Contact: Jared Hernandez, Chief of Police, 408-586-2406)**
Category:	Consent Calendar-Public Safety
Meeting Date:	5/21/2024
Recommendation:	Receive and approve the Calendar Year 2023 Controlled Equipment Annual Report.

BACKGROUND:
On September 30, 2021, California Governor Gavin Newsom approved Assembly Bill 481, requiring California law enforcement agencies to obtain approval of a Military Equipment Use Policy from their applicable governing body (City Council) before taking actions related to the funding, acquisition, or use of controlled equipment. Assembly Bill 481 allows the governing body to approve the funding, acquisition, and use of controlled equipment ("Military Equipment") within its jurisdiction if the equipment meets specified standards.

The Controlled Equipment Use Policy and an Annual Controlled Equipment Use Report are subject to annual review to affirm the criteria outlined in Assembly Bill 481 have been met. In addition, Assembly Bill 481 requires the publication of the Controlled Equipment Use Policy ("Policy") and a Controlled Equipment Use report on the Milpitas Police Department website annually and at least thirty (30) days before a mandated publicly available meeting.

California Government Code section 7072 requires an annual report within a year of the Policy approval and annually after that for as long as the controlled equipment is in use. The annual report must contain the following information: (1) a summary of how the equipment was used and the purpose of its use; (2) a summary of any complaints or concerns from members of the public about the equipment; (3) the results of an internal audit, including any information about violations of the equipment use policy and any actions taken in response; (4) the total annual cost for each type of equipment, including acquisition, personnel, training, transportation, maintenance, storage, upgrade, and other ongoing expenses, and from what source funds will be provided for the controlled equipment in the calendar year following submission of the annual report; (5) the quantity possessed for each type of controlled equipment; and (6) if the law enforcement agency intends to acquire additional controlled equipment in the next year, and the quantity sought for each type of qualifying equipment.

ANALYSIS:
The Milpitas Police Department is committed to protecting lives and property by working with the Milpitas community and providing professional and responsive police services. To accomplish its mission effectively and safely, the Milpitas Police Department possesses and utilizes specific specialized equipment (controlled equipment) to safeguard the Milpitas community and protect the City's first responders. While the City's inventory of controlled equipment varies, the mere possession of this equipment does not warrant its use. The merits and the totality of the circumstances of each unique incident are considered before controlled equipment is utilized in compliance with department policy and law.

The term "military equipment," as used in Assembly Bill 481, does not necessarily indicate the equipment is or has been used by the military. Many items defined as "military equipment" by the bill are often used by law enforcement to preserve life and enhance public and officer safety, while remaining prepared to handle the various lethal and non-lethal challenges facing our communities. The Milpitas Police Department use of controlled equipment is consistent with overall best practices employed by police departments nationwide. Items used by the Milpitas Polce Department that are considered controlled equipment under Assembly Bill 481 include, but are not limited to, emergency response equipment such as command vehicles and

armored rescue vehicles, less-lethal shotguns, less-lethal 40mm projectile launchers, precision weapons such as rifles, unmanned aircraft systems, and other select items.

The 2023 Annual Controlled Equipment Use Report contains a summary of the equipment usage guidelines, inventory, fiscal impact, complaints, and reported community concerns for calendar year 2023 (January 1, 2023, through December 31, 2023). Although controlled equipment was deployed during the year, it was rarely utilized. The Milpitas Police Department received no complaints from the community about its controlled equipment or policies related to its use. Furthermore, an internal audit of the controlled equipment revealed no Policy violations for the storage or use of controlled equipment. The impact of controlled equipment related expenses on the operating budget was negligible; the total annual costs related to controlled equipment for 2023 were approximately $88,726.81 or 0.23% of the overall Police Department operating budget.

The draft 2023 Annual Controlled Equipment Use Report was presented at the Public Safety & Emergency Preparedness Commission public meeting on March 21, 2024 by the Police Department liaison. The commission members did not respond with any questions/concerns related to the 2023 Annual Controlled Equipment Use Report nor the Controlled Equipment Use Policy. No members of the public commented on the item.

To continue providing adequate police services and maximize the department's ability to keeping the community and officers safe, the Milpitas Police Department will procure the following controlled equipment, previously approved by Council, for calendar year 2024:

- One (1) additional DJI Matrice 30 Series UAS;
- Four (4) DJI Avata UASs; and
- Four (4) Pepperball VKS Pro Launchers and less-lethal live rounds and training rounds associated with the VKS platform.

The continued access to and use of this equipment is vital in ensuring our officers have the appropriate tools to de-escalate situations, preserve life, ensure safety for all people in Milpitas, and protect civil liberties.

POLICY ALTERNATIVE(S):

Alternative 1: Do not accept and approve the 2023 Annual Controlled Equipment Use Report.

Pros: There are no identified benefits to this alternative.
Cons: The City would not be in compliance with California State Law Assembly Bill 481.

Reason for Not Recommending: The Milpitas Police Department use of controlled equipment is consistent with overall best practices employed by police departments nationwide and in line with department policy. Not accepting the report would not comply with annual reporting requirements of AB481.

FISCAL IMPACT:
There is no additional fiscal impact associated with accepting and approving the 2023 Annual Controlled Equipment Use Report.

CALIFORNIA ENVIRONMENTAL QUALITY ACT (CEQA):
The action is not a project pursuant to Cal. Code of Regs., tit 14, § 15378.

RECOMMENDATION:
1. Receive and Approve the Calendar Year 2023 Controlled Equipment Annual Report.

ATTACHMENT(S):
(a) 2023 Controlled Equipment Annual Report
(b) Public Safety and Emergency Preparedness Commission meeting minutes, March 21, 2024

Milpitas Police Department

Controlled Equipment Annual Report

January 1, 2023, to December 31, 2023

Chief Jared Hernandez · 1275 North Milpitas Boulevard, Milpitas, CA 95035 · www.milpitas.gov

Table of Contents

Executive Summary 2
Introduction 4
Summary of Controlled Equipment Usages 5
Current Inventory of Controlled Equipment 6
Controlled Equipment Categories 7
Unmanned Aerial Systems (UAS) 8
Robots 12
Armored Vehicle 14
Mobile Incident Command Vehicle 16
40 MM Less-Lethal Launchers and Munitions 18
Less-Lethal Shotgun and Munitions 24
Diversionary Devices 26
Rifles and Munitions 29
Chemical Agents and Smoke Canisters 39
Breaching Tools 44
Training Summary 49
Training Costs 49
Equipment Costs 50
Fiscal Impact 51
Projected Acquisitions for 2024 52
Consumable Controlled Equipment 52
Non-Consumable Controlled Equipment 53
Department Transparency 55
Controlled Equipment Coordinator Report 56
Conclusion 57
Appendix 58
Definitions 58
Policy - Controlled Equipment (Military Equipment) 59

Executive Summary

On September 30, 2021, California Governor Gavin Newsom approved Assembly Bill 481 requiring California law enforcement agencies to obtain approval of a Military Equipment Use Policy by their applicable governing body (City Council) prior to taking certain actions related to the funding, acquisition, or use of controlled equipment.

Assembly Bill 481 allows the governing body to approve the funding, acquisition, and use of controlled equipment ("Military Equipment") within its jurisdiction if the equipment meets specified standards. The Controlled Equipment Use Policy and an Annual Controlled Equipment Use Report is subject to annual review to affirm the criteria outlined in Assembly Bill 481 have been met.

Assembly Bill 481 requires the publication of the Controlled Equipment Use Policy and a Controlled Equipment Use Report on the Department's website annually and at least thirty (30) days prior to a mandated publicly available meeting.

California Government Code section 7072 requires an annual report within a year of the policy approval and annually after that for as long as the controlled equipment is in use. The annual report must contain the following information:

(1) A summary of how the equipment was used and the purpose of its use.

(2) A summary of any complaints or concerns from members of the public about the equipment.

(3) The results of an internal audit, including any information about violations of the equipment use policy, and any actions taken in response.

(4) The total annual cost for each type of equipment, including acquisition, personnel, training, transportation, maintenance, storage, upgrade, and other ongoing expenses; and from what source funds will be provided for the controlled equipment in the calendar year following submission of the annual report.

(5) The quantity possessed for each type of controlled equipment.

(6) If the law enforcement agency intends to acquire additional controlled equipment in the next year, and the quantity sought for each type of qualifying equipment.

The Police Department shall hold at least one well-publicized and conveniently located community engagement meeting, at which the public may discuss and ask questions regarding the annual report, the law enforcement agency's funding, acquisition, and/or the use of the controlled equipment.

The Milpitas Police Department recognizes the public's ongoing interest in how controlled equipment is used to protect our community and is committed to maintaining our community's trust in providing professional and responsive police services. As such, the Milpitas Police Department has authored the following comprehensive Annual Controlled Equipment Use Report to remain transparent with our community and in accordance with annual reporting requirements set forth by applicable California Law.

Introduction

The Milpitas Police Department is committed to the protection of lives and property by working with our community and providing professional and responsive police services. To accomplish our mission effectively and safely, the Milpitas Police Department possesses and utilizes certain specialized equipment (controlled equipment) to safeguard the citizens of Milpitas and protect our first responders. While our inventory of controlled equipment varies, the mere possession of this equipment does not warrant its use. The merits and a totality of the circumstances of each unique incident are considered before controlled equipment is utilized in compliance with department policy and law.

The term “military equipment,” as used in Assembly Bill 481, does not necessarily indicate the equipment is, or has been used, by the military. Many items defined as “military equipment” by the bill are more often used by law enforcement to preserve life and enhance public and officer safety while remaining prepared to handle the various lethal and non-lethal challenges facing our communities. The Milpitas Police Department’s use of controlled equipment is consistent with overall best practices employed by police departments throughout the country.

Items used by the Milpitas Police Department that are considered controlled equipment under Assembly Bill 481 include, but are not limited to, emergency response equipment such as command vehicles and armored rescue vehicles, less lethal shotguns, less-lethal 40mm projectile launchers, precision weapons such as rifles, unmanned aircraft systems, and other select items. The continued access to, and use of, this equipment is vital in ensuring our officers have the appropriate tools necessary to de-escalate situations, preserve life, ensure safety for all people, and protect civil liberties.

This Annual Controlled Equipment Use Report outlines a summary of the equipment usage guidelines, inventory, fiscal impact, complaints, and reported community concerns for calendar year 2023 (January 1, 2023, through December 31, 2023).

Summary of Controlled Equipment Usages

The Milpitas Police Department provides law enforcement services twenty-four hours a day, seven days a week, serving a city population of over 80,000. The daytime population of Milpitas increases to over 130,000 people. The Department is committed to de-escalating situations, and using force is reserved for instances where less intrusive options are not feasible. In 2023, the Milpitas Police Department responded to approximately 68,422 calls for service. Of those calls for service, officers used force on only 9 occasions, representing 0.013% of the total calls for service. Officers used controlled equipment in 4 cases involving the use of force, specifically less-lethal shotgun/bean bag rounds.

Police events and critical incidents are unpredictable and often very dynamic. The availability and use of specific equipment are necessary for incident commanders, officers, and specialized units to resolve incidents safely and effectively. It is incumbent upon incident commanders, supervisors, individual officers, and specialized teams to recognize the circumstances wherein specialized equipment should be deployed and to utilize the equipment within the confines of department policy and state law. Each use of controlled equipment is reviewed to ensure it was used properly and justly based on the totality of the circumstances, public safety, officer safety, civil rights, state law, and information available at the time of use.

Current Inventory of Controlled Equipment

The Milpitas Police Department is committed to remaining transparent about the Department's controlled equipment inventory and the sharing of the equipment's capabilities, uses, and other related information with our community and elected officials. The data provided in this report is accurate as of January 2024, however, inventory may have fluctuated by the time of this report's publication.

The inventory of controlled equipment, particularly consumable material (ammunition, diversionary devices, munitions, etc.) may fluctuate due to a variety of factors including but not limited to operational usage, operational deterioration, training, maintenance, expiration and replenishment guidelines.

The following is a list of the various types, descriptions, and guidelines for usage of controlled equipment currently employed by the Department:

(***NOTE:** The descriptions and source photos contained in this report are for controlled equipment descriptive purposes only and are not an endorsement by the City of Milpitas or the Milpitas Police Department of a product or vendor.)

Controlled Equipment Categories

Assembly Bill 481 created Government Code 7070 which designated 15 categories of items deemed “military” or more accurately defined as controlled equipment:

*	**Category 1:**	Unmanned, remotely piloted, powered aerial or ground vehicles
*	**Category 2:**	Mine-resistant ambush-protected vehicles or armored personnel carriers
*	**Category 3:**	High mobility multipurpose wheeled vehicles (HMMWV), two-and-one-half-ton trucks, five-ton trucks, or wheeled vehicles that have a breaching or entry apparatus attached
	Category 4:	Tracked armored vehicles that provide ballistic protection to their occupants
*	**Category 5:**	Command and control vehicles that are either built or modified to facilitate the operational control and direction of public safety units
	Category 6:	Weaponized aircraft, vessels, or vehicles of any kind
*	**Category 7:**	Battering rams, slugs, and breaching apparatuses that are explosive in nature
	Category 8:	Firearms of .50 caliber or greater, excluding standard-issue shotguns and standard-issue shotgun ammunition
	Category 9	Ammunition of .50 caliber or greater, excluding standard-issue shotgun ammunition
*	**Category 10:**	Specialized firearms and ammunition of less than .50 caliber, including firearms and accessories identified as assault weapons in Penal Code § 30510 and Penal Code §30515, with the exception of standard-issue handguns
*	**Category 11:**	Any firearm or firearm accessory that is designed to launch explosive projectiles
*	**Category 12:**	Noise-flash diversionary devices and explosive breaching tools, munitions containing tear gas and pepper balls, excluding standard, service issued handheld pepper spray.
	Category 13:	TASER® Shockwave, microwave weapons, water cannons, and long-range acoustic devices
*	**Category 14:**	Kinetic energy weapons and munitions
	Category 15:	Any other equipment as determined by a governing body or a state agency to require additional oversight

*** Indicates a category of controlled equipment previously approved by the governing body and utilized by the Milpitas Police Department.**

Unmanned Aerial Systems (UAS) (Category 1)

An unmanned aerial system of any type that can sustain direct flight, whether remotely controlled or via pre-programing, and all the attached systems are designed for gathering information via photography, recording, or any other means.

Capability: The Milpitas Police Department uses UAS of varying sizes and capabilities to enhance public safety. The UAS can be deployed when an overhead view would assist officers or incident commanders with planning and responding to a situation. Types of situations include but are not limited to, infrastructure damage assessments, major traffic collision investigations, search for missing persons, natural disaster management, crime scene photography, SWAT, tactical or other public safety and life-preservation missions, and/or in response to specific requests from local, State, or Federal fire authorities for fire response and/or prevention. All UAS used by the Department is used in compliance with all federal, state, and local laws.

Usage: Use is established under Milpitas Policy Manual Section 456 and FAA Regulation 14 CFR Part 107. It is the policy of the Milpitas Police Department to utilize UAS only for official law enforcement purposes, and in a manner that respects the privacy of our community, pursuant to State and Federal law. UAS usages include collection of evidence in the form of aerial photography/video in support of an investigation (i.e., shooting scenes, homicide scenes); support of SWAT and Patrol during high-risk, tactical, or other public safety life preservation missions (i.e., interior visual assessments of structures or outdoor areas to gain intelligence prior to officers entering a dwelling or contacting a potentially armed or a resistive subject that may be hiding); to conduct aerial searches for missing persons; and provide aerial observation to assist in managing natural disasters (i.e., fires, floods, storms) or in any other manner to preserve life and enhance public safety.

Training Requirements: All Department UAS operators are licensed by the Federal Aviation Administration for UAS operation. Although not required by POST or the FAA, officers attend a 20-hour internal training course. Course topics include nomenclature, proper and safe flying techniques, privacy concerns, laws, and review of the Department's UAS policy.

The Department currently utilizes the following UAS:

DJI Mavic Mini

Cost	$500 each
Quantity	2
Lifespan	3-5 Years
Funding Source	Grant Funding

Manufacturer: DJI

Manufacturer Description: Miniature UAS that weighs approximately 249 grams and can record video and audio with approximately 30 minutes of flight time. This is a remotely operated battery-powered aircraft designed to be operated within sight of the operator or a spotter. Each aircraft is equipped with a camera capable of relaying a real-time image back to the operator.

DJI Mavic Enterprise Duals

Cost	$3,500 each
Quantity	4
Lifespan	3-5 Years
Funding Source	Grant Funding

Manufacturer: DJI

Manufacturer Description: UAS that has a color and inferred camera as well as audible speaker and light. Capable of video recording and weighs 899 grams, approx. 30 minutes of flight time. This is a remotely operated battery-powered aircraft designed to be operated within sight of the operator or a spotter. Each aircraft is equipped with a camera capable of relaying a real-time image back to the operator.

DJI Matrice 210 V2

Cost	$10,410
Quantity	1
Lifespan	3-5 Years
Funding Source	Grant Funding

Manufacturer: DJI

Manufacturer Description: UAS that has a color and inferred camera as well as audible speaker and light. Capable of video recording and weighs 899 grams, approx. 30 minutes of flight time. This is a remotely operated battery-powered aircraft designed to be operated within sight of the operator or a spotter. Each aircraft is equipped with a camera capable of relaying a real-time image back to the operator.

DJI Matrice 300 RTK

Cost	$11,349
Quantity	1
Lifespan	3-5 Years
Funding Source	Grant Funding

Manufacturer: DJI

Manufacturer Description: UAS that is foul weather capable and has dual gimbal, has an IR camera, zoom camera and light. Has video recording capabilities and is approx. 14 pounds. Has 55 minutes of flight time. This is a remotely operated battery-powered aircraft designed to be operated within sight of the operator or a spotter. Each aircraft is equipped with a camera capable of relaying a real-time image back to the operator.

DJI Matrice 30 Series

Cost	$13,198
Quantity	1
Lifespan	3-5 Years
Funding Source	Grant Funding

Manufacturer: DJI

Manufacturer Description: UAS that is an all-weather drone and integrates multiple high-performance sensors into a light weight and portable body. This is a remotely operated battery-powered aircraft designed to be operated within sight of operator or a spotter. Each aircraft is equipped with digital video streaming technology capable of relaying a real-time image back to the operator, and obstacle detection sensors. This UAS weighs 3770g and has a maximum flight time of 41 minutes.

Autel Robotics EVO II Dual 640 - Refurbished

Cost	$0
Quantity	1
Lifespan	3-5 Years
Funding Source	N/A

Manufacturer: Autel Robotics

Manufacturer Description: The EVO II Dual has about 32-34 minutes of flight time per battery. The Orange color of the Dual is great for functionality and ease of operation and is easier to see in the sky. This is a remotely operated battery-powered aircraft designed to be operated within sight of the operator or a spotter. Each aircraft is equipped with a camera capable of relaying a real-time image back to the operator.

Robots (Category 1)

A machine that is capable of being controlled remotely and can be deployed in-lieu of a human to gather visual and auditory intelligence, as well as conduct limited physical manipulation of items.

Capability: Robots can be used to reduce risk to human life in dangerous or potentially volatile situations. They are also used in tactical support of special operations and can be used to acquire visual/audio intelligence, deliver de-escalation tools such as a Crisis Negotiation Team phone, open doors, and clear buildings without risk to human life.

Usage: It is the policy of the Milpitas Police Department to utilize a robot only for official law enforcement purposes, and in a manner that respects the privacy of our community, pursuant to State and Federal law. Use is authorized by the Division Captain or designee.

Training Requirements: Only assigned operators who have completed the in-house required training shall be permitted to operate the robots. Training topics include nomenclature, operation techniques, and practical exercises.

The Department currently utilizes the following Robots:

Robotex Avatar II

Cost	$19,406
Quantity	1
Lifespan	8-10 Years
Funding Source	Grant Funding

Manufacturer: Robotex

Manufacturer Description: The AVATAR II enables law enforcement to remotely inspect dangerous situations and gather video and audio intelligence, including direct-to-unit video and audio recording, a touchscreen display, increased durability, and secure Wi-Fi networking. With these capabilities' officers will be better equipped to remotely gather intelligence and keep themselves and their teams safe from harm.

ICOR Mini Caliber

Cost	$48,500
Quantity	1
Lifespan	8-10 Years
Funding Source	General Funds

Manufacturer: ICOR

Manufacturer Description: The Mini Caliber is a lightweight, modular portable robot designed for rapid deployment, it is simple to operate and quick to deploy for searching rooms, hallways, stairwells, and confined spaces. It also includes an extendible rotating claw arm that simplifies opening door handles, providing protection and safety to their operators.

Armored Vehicle (Categories 2 & 3)

Commercially produced 4-wheel drive vehicle designed for law enforcement that provides protection against bullets, shell fragments, and other projectiles.

Capability: The Medevac is primarily used by the Special Weapons and Tactics Team (SWAT) to safely transport personnel to and from critical incidents, extract citizens from volatile situations, high-risk rescue operations, training, provide emergency medical staff and/or Tactical Emergency Medicine (TEM) personnel a safe working environment, and to delivering equipment in high-risk environments. The Medevac can also be used to conduct rescue missions during disasters. Additionally, the vehicle is utilized for community engagement efforts and other applications deemed appropriate.

Usage: Use is established under Milpitas Policy Manual Section 707. It is the policy of the Department to utilize the armored vehicle only for official law enforcement purposes, and pursuant to State and Federal law.

Training Requirements: All drivers/operators shall attend formalized instruction and be trained in vehicle operations and practical driving techniques. POST certified driving instructors provide training consisting of safe driving practices and proper operation of the vehicle's equipment.

The Department currently utilizes the following Armored Vehicle:

2018 LENCO Bearcat MEDEVAC, G2

Cost	$388,800
Quantity	1
Lifespan	25 Years
Funding Source	Capital Improvement

Manufacturer: LENCO

Manufacturer Description: The Lenco BearCat Medevac, also known as the MedCat, was designed to meet the combined requirements of SWAT & Tactical Emergency Medical Service Teams. The Medevac can be used as an armored Response & Rescue SWAT truck for dangerous callouts and is equipped to provide Tactical EMS with a safe & effective environment to deal with trauma cases. It seats 10-12 personnel with open floor plan that allows for rescue of down personnel. It can stop various projectiles, which provides greater safety to citizens and officers beyond the protection level of shield and personal body armor.

Mobile Incident Command Vehicle (Category 5)

A completely self-contained command post designed to provide shelter, access to department computers, and restroom facilities for extended events. This vehicle can also be used to manage/facilitate pre-planned or significant events, which require on-site planning and incident command personnel.

Capability: As a mobile base of operation, this vehicle contains specialized command, control, and communications equipment that can be used during critical incidents, large events, natural disasters, and community events. The replacement command vehicle (anticipated delivery February 2024) will be equipped to function as a fully operational mobile Public Safety Answering Point (PSAP) and will serve as a backup to the existing Dispatch Center in the Police Department.

Usage: The command vehicle shall be used by trained personnel in a manner consistent with Department policy and training. Furthermore, only personnel who have completed the Departmental Training and who are properly licensed will be allowed to drive the command vehicle.

Training Requirements: All drivers/operators shall attend formalized instruction and be trained in vehicle operations and practical driving techniques. POST certified driving instructors provide training consisting of safe driving practices and proper operation of the vehicle's equipment.

The Department currently operates the following MIC's:

Mobile Incident Command Vehicle

Cost	$133,166
Quantity	1
Lifespan	Expired
Funding Source	Unknown

Manufacturer: Winnebago

Manufacturer Description: 1998 Winnebago Adventurer (custom built) vehicle The MIC can also be utilized for SWAT/HNT and other critical incidents, preplanned large events, searching for missing persons, natural disasters, and community events. This vehicle is scheduled to be decommissioned and replaced in December of 2023.

Cost	$1,250,000
Quantity	1
Lifespan	25 Years (Chassis) 6 Years (IT Systems)
Funding Source	Capital Improvement

Manufacturer: LDV, Inc.

Manufacturer Description: The Mobile Emergency Operations Center (MEOC) will be a fully functioning Mobile Public Safety Answering Point (PSAP) and serve as a backup to our existing Dispatch Center. The MEOC will also be a shared asset used by the Police and Fire Departments during critical incidents, preplanned large events, searching for missing persons, natural disasters, and community events. This vehicle is expected to be delivered in February 2024.

40 MM Less-Lethal Launchers and Munitions (Categories 11, 12, & 14)

A single-shot impact launcher capable of firing an array of less-lethal 40mm rounds.

Capability: De-escalate situations using less-lethal force and gain compliance from a safe distance. 40MM Less-Lethal Launchers have an effect range of up to 20 yards.

Usage: The 40mm less-lethal launcher may be deployed to gain compliance or de-escalate conflicts to help prevent a situation from becoming a lethal force situation. The system's effectiveness provides time and distance between officers and a suspect, reducing the immediacy of the threat and allows opportunity for further de-escalation. This system can be used to address self-destructive/suicidal, dangerous, and/or combative individuals; to gain a tactical advantage from a distance (i.e., breaking a window to get an unobstructed view of an individual or disabling a security camera); against potentially vicious animals; and for riot/crowd control and/or civil unrest incidents where the use of the 40mm is objectively reasonable.

Training Requirements: Sworn members utilizing 40MM less-lethal chemical agents or impact rounds are trained in their use by POST-Certified less-lethal chemical agent's instructors. Training includes a review of the Departments Use of Force Policy, nomenclature, familiarization of the system and a qualification course.

The Department utilizes the following 40 MM Less-Lethal Launcher and Munitions:

Defense Technologies 40 MM Single Shot Launcher #1425

Cost	$810 each
Quantity	6
Lifespan	25 Years
Funding Source	General Funds

Manufacturer: Defense Technology

Manufacturer Description: The 40MM Single Launcher is a tactical single-shot launcher that features an adjustable Integrated Front Grip (IFG) with a rail-mounted holographic sight. It will fire standard 40mm less lethal ammunition, up to 4.8 inches in cartridge length. It will launch a 40MM less lethal round up to 131 feet and is only authorized to be used by trained personnel.

The Department currently possesses the following 40mm munitions:

Defense Technology 40mm Exact Impact Sponge Round #6325

Cost	$18 each
Quantity	0 of 20
Lifespan	5 Years
Funding Source	General Funds

Manufacturer: Defense Technology

Manufacturer Description: A less-lethal 40mm lightweight plastic and foam projectile fired from a single or multi-round purpose built 40mm launcher with a rifled barrel at 325 FPS. The 30-gram foam projectile delivers 120 ft/lbs. of energy on impact. The 40mm Exact Impact Sponge Round provides accurate and effective performance when fired from the approved distance of not less than five (5) feet and as far as 131 feet from the target.

Defense Technology 40MM Direct Impact Marking Round #6326

Cost	$30 each
Quantity	7 of 7
Lifespan	5 Years
Funding Source	General Funds

Manufacturer: Defense Technology

Manufacturer Description: A less-lethal 40MM lightweight plastic and crushable foam projectile fired from a single or multi-round purpose-built 40mm launcher with a rifled barrel at 295 FPS. The green foam nose indicates that the round contains a marking agent.

Defense Technology 40MM Direct Impact Reloadable Training Kit #6530

Cost	$1300 each
Quantity	1
Lifespan	No Expiration
Funding Source	General Funds

Manufacturer: Defense Technology

Manufacturer Description: The 250-piece Direct Impact Reloadable Training Kit allows realistic training to be conducted at a fraction of the cost of using operational rounds. These reusable projectiles can be reloaded by hand in the field in less than 10 seconds without the need for presses or other reloading equipment. These rounds are not for use on humans.

Defense Technology Spede-Heat 40MM Long Range, CS, Round #6182

Cost	$30 each
Quantity	40 of 40
Lifespan	5 Years
Funding Source	General Funds

Manufacturer: Defense Technology

Manufacturer Description: The SPEDE-HEAT CS Long-Range Munitions delivers one chemical canister of CS agent from a 40 mm launcher down range up to 150 yards. The Spede-Heat is a pyrotechnic round designed specifically for outdoor use in riot situations with a high-volume continuous burn that expels its payload in approximately 20-40 seconds from a single source. The Spede-Heat family may be used to conceal tactical movement.

Defense Technology Ferret 40MM Powder Barricade Round CS #1292

Cost	$30 each
Quantity	43
Lifespan	5 Years
Funding Source	General Funds

Manufacturer: Defense Technology

Manufacturer Description: A less lethal 40MM round used to penetrate barriers, such as windows, hollow core doors, wallboard, and thin plywood. Upon impacting the barrier, the nose cone ruptures and instantaneously delivers a small chemical payload inside of a structure or vehicle. In a tactical deployment situation, the 40mm Ferret is primarily used to dislodge barricaded subjects from confined areas. Its purpose is to minimize the risks to all parties through pain compliance, temporary discomfort, and/or incapacitation of potentially violent or dangerous subjects.

Defense Technology Ferret 40MM Powder Barricade Training Round Inert #1293

Cost	$23 each
Quantity	14
Lifespan	5 Years
Funding Source	General Funds

Manufacturer: Defense Technology

Manufacturer Description: An inert training less-lethal 40MM round used to penetrate barriers, such as windows, hollow core doors, wallboard and thin plywood. Upon impacting the barrier, the nose cone ruptures and instantaneously delivers an inert payload inside of a structure or vehicle. The 40mm inert Ferret round is primarily used to train personnel in the proper use of its deployment.

Defense Technology Ferret 40MM Liquid Barricade Training Round Inert #1263

Cost	$23 each
Quantity	15
Lifespan	5 Years
Funding Source	General Funds

Manufacturer: Defense Technology

Manufacturer Description: A less-lethal 40mm lightweight plastic and foam projectile fired from a single or multi-round purpose-built 40mm launcher with a rifled barrel at 325 FPS. The 30-gram foam projectile delivers 120 ft/lbs. of energy on impact. The 40mm Exact Impact Sponge Round provides accurate and effective performance when fired from the approved distance of not less than five (5) feet and as far as 131 feet from the target.

Combined Systems Inc. 40MM Sponge, Smokeless Spin Stabilized Round #4577

Cost	$30 each
Quantity	1200
Lifespan	5 Years
Funding Source	General Funds

Manufacturer: Combined Systems Inc.

Manufacturer Description: A spin-stabilized projectile delivering blunt trauma effect. Although it is extremely accurate and consistent, accuracy is dependent on the launcher. Effectiveness depends on many variables, such as distance, clothing, stature, and the point where the projectile impacts. Its purpose is to minimize the risks to all parties through pain compliance and/or incapacitation of potentially violent or dangerous subjects.

Less-Lethal Shotgun and Munitions (Categories 10 & 14)

The less-lethal shotgun is a standard Remington Model 870, 12-gauge shotgun that has been converted to fire bean bag rounds as an alternative to lethal force when appropriate. The less-lethal shotgun has a distinctive, orange-colored stock and foregrip to distinguish it from lethal weapons.

Capability: The less-lethal shotgun can fire a 12-gauge Super-Sock Bean Bag Round with a maximum effective range of seventy-five (75) feet. The range of the weapon system helps to maintain space between officers and a suspect reducing the immediacy of the threat, which is a principle of de-escalation.

Usage: The less-lethal shotguns can be deployed to de-escalate conflict and reduce the need for lethal force. The system's effective allows time and distance between officers and a suspect, reducing the immediacy of the threat and allows opportunity for further de-escalation. This system can be used to address self-destructive/suicidal, dangerous, and/or combative individuals, to gain a tactical advantage from a distance (i.e., breaking a window to get an unobstructed view of an individual or disabling a security camera), against potentially vicious animals, riot/crowd control and/or civil unrest incidents where the use of the 40mm is objectively reasonable.

Training Requirements: All officers must successfully complete a minimum of two hours of department training before they can deploy the less lethal shotgun. Training includes a review of the Departments Use of Force Policy, nomenclature, familiarization of the system, and a qualification course.

The Department possesses the following Less Lethal Shotguns and Munitions:

Remington 870 Less Lethal 12 Gauge Shotgun

Cost	$946 each
Quantity	35
Lifespan	25 Years
Funding Source	General Funds

Manufacturer: Remington

Manufacturer Description: The Remington 870 Less Lethal Shotgun is used to deploy the less lethal 12-gauge Super-Sock Beanbag Round up to a distance of 75 feet. The range of the weapon system helps to maintain space between officers and a suspect reducing the immediacy of the threat which is a principle of De-escalation.

Combined Systems Inc. Super-Sock Bean Bag Round #2581

Cost	$32/ Box
Quantity	136 of 150 Boxes
Lifespan	No Expiration
Funding Source	General Funds

Manufacturer: Combined Systems Inc.

Manufacturer Description: A less lethal 2.4-inch 12-gauge shotgun round firing a ballistic fiber bag filled with 40 grams of lead shot at a velocity of 270-290 feet per second (FPS). CTS Super-Sock rounds are discharged from a dedicated 12-gauge shotgun that is distinguishable by an orange butt stock and fore grip. This round provides accurate and effective performance when fired from the approved distance of not fewer than five (5) feet. The maximum effective range of this munition is up to 75 feet from the target.

Diversionary Devices (Category 12)

A handheld device that can be deployed to emit a flash, sound, and/or smoke.

Capability: To produce atmospheric overpressure and brilliant white light that can cause short-term (6 to 8 seconds) physiological/psychological, sensory deprivation to give officers a tactical advantage. A diversionary device is ideal for distracting dangerous suspects during apprehensions, hostage rescues, room entry, or other high-risk arrest situations.

Usage: Diversionary devices shall only be used by officers who have been trained in the proper use. These devices can be deployed in hostage and barricaded subject situations; in high-risk (search/arrest) warrant services where there may be hazards to officers; during other high-risk situations where the use would be advantageous in preserving life and/or increase officer safety; and during training exercises.

Training Requirements: Prior to using this equipment, officers must attend diversionary device training. Training is provided by POST certified instructors in the safe handling, deployment, and documentation of the use of this equipment.

Note: Some orders of Diversionary Devices can only be ordered in minimum quantities. As a result, some inventories may occasionally exceed needed amounts.

The Department currently possesses the following Diversionary Devices:

Combined Tactical Systems Inc. #7290-2 Noise Flash Device

Cost	$52 each
Quantity	12 of 24
Lifespan	No Expiration
Funding Source	General Funds

Manufacturer: Combined Systems Inc.

Manufacturer Description: A non-bursting, non-fragmenting multi-bang device that produces a thunderous bang with an intensely bright light. Ideal for distracting dangerous suspects during assaults, hostage rescue, room entry, or other high-risk arrest situations.

Combined Tactical Systems Inc. #7290-9 Noise Flash Device Multi Burst

Cost	$60 each
Quantity	6 of 6
Lifespan	No Expiration
Funding Source	General Funds

Manufacturer: Combined Systems Inc.

Manufacturer Description: A multi-bang, non-bursting, non-fragmenting multi-bang device that produces a thunderous bang with an intensely bright light. Ideal for distracting dangerous suspects during assaults, hostage rescue, room entry, or other high-risk arrest situations.

Defense Technology #8902 Noise Flash Device Low Role

Cost	$55 each
Quantity	0 of 24
Lifespan	No Expiration
Funding Source	General Funds

Manufacturer: Defense Technology

Manufacturer Description: A non-bursting, limited movement and rolling, non-fragmenting device that produces a thunderous bang with an intensely bright light. Ideal for distracting dangerous suspects during assaults, hostage rescue, room entry, or other high-risk arrest situations.

Rifles, Munitions, and Accessories (Category 10 & 11)

The rifle is a long-barreled firearm designed for greater accuracy over a long distance.

Capability: The rifle provides officers the ability to engage hostile suspects from distances far greater than their handguns. The standard issued rifles can have an effective range of 600 yards and offer increased accuracy over a handgun. However, rifles are not appropriate for every situation.

Usage: Officers may deploy the rifle in any circumstance where the officer can articulate a reasonable expectation that the rifle may be needed. Examples of some general guidelines for deploying the rifle may include, but are not limited to, the following:

a) Situations where the officer reasonably anticipates an armed encounter.
b) When an officer is faced with a situation that may require the delivery of accurate and effective shot placement at long range.
c) Situations where an officer reasonably expects the need to meet or exceed a suspect's weaponry.
d) When an officer reasonably believes there may be a need to deliver accurate shot placement on a barricaded suspect or a suspect with a hostage.
e) When an officer reasonably believes a suspect may be wearing body armor.
f) When needed to euthanize an animal.

Training Requirements: Prior to deploying a rifle, officers must successfully complete a 16-hour POST approved training course. The course is taught by POST certified instructors. Officers are required to pass a qualification course annually.

The Department currently possesses the following rifles:

Colt Tactical Carbine Model AR-15A3

Cost	$800 each
Quantity	100
Lifespan	No Expiration
Funding Source	General Funds

Manufacturer: Colt

Manufacturer Description: A rifle that fires an intermediate-power cartridge (.223) which is more powerful than a standard pistol but less powerful than a standard rifle. Rifle and has a 16" barrel. The magazine holds 30 rounds of ammunition, and the rifle has a collapsible stock. The carbine provides officers the ability to engage hostile suspects at distances generally greater than the effective distance of their handguns. Additionally, AR-15 rifles offer advantages over handguns, such as increased accuracy potential and the ability to defeat soft body armor but are not appropriate for every situation.

Colt Tactical Carbine Model M16

Cost	$800 each
Quantity	4
Lifespan	No Expiration
Funding Source	General Funds

Manufacturer: Colt

Manufacturer Description: A rifle that fires an intermediate-power cartridge (.223) which is more powerful than a standard pistol but less powerful than a standard rifle. Rifle and has a 16" barrel. The magazine holds 30 rounds of ammunition, and the rifle has a collapsible stock. The carbine provides officers the ability to engage hostile suspects at distances generally greater than the effective distance of their handguns. Additionally, AR-15 rifles offer advantages over handguns, such as increased accuracy potential and the ability to defeat soft body armor but are not appropriate for every situation.

Sionics Weapons Systems Model Short Barrel Rifle (SBR) LE

Cost	$1500 each
Quantity	15
Lifespan	No Expiration
Funding Source	General & Grant Funding

Manufacturer: Sionics Weapons Systems

Manufacturer Description: A rifle that fires an intermediate-power cartridge (.223) which is more powerful than a standard pistol but less powerful than a standard rifle. Rifle and has a 16" barrel. The magazine holds 30 rounds of ammunition, and the rifle has a collapsible stock. The carbine provides officers the ability to engage hostile suspects at distances generally greater than the effective distance of their handguns. Additionally, AR-15 rifles offer advantages over handguns, such as increased accuracy potential and the ability to defeat soft body armor but are not appropriate for every situation.

Heckler and Koch Model MP5A3

Cost	$1000 each
Quantity	7
Lifespan	No Expiration
Funding Source	General Funds

Manufacturer: Heckler and Koch

Manufacturer Description: A submachine gun chambered in 9mm it is universally applicable making it useable in all areas and under all conditions. The magazine holds 30 rounds of ammunition and allows officers the ability to engage hostile suspects at distances generally greater than the effective distance of their handguns. Used by the Special Weapons and Tactics Team.

Remington Model 700 P Bolt Action Rifle

Cost	$0 each
Quantity	3
Lifespan	No Expiration
Funding Source	Donation

Manufacturer: Remington

Manufacturer Description: A semi-automatic shoulder-fired rifle with precision optics that fires a .308 Winchester cartridge. The .308 rifle provides SWAT Snipers the ability to engage hostile suspects at great distances with accuracy. The .308 rifles are used exclusively by officers assigned to the SWAT Sniper Team. These rifles are typically deployed with the SWAT Sniper Team during high-risk SWAT operations and special events or instances wherein Sniper Over Watch Teams are needed.

Remington Model 700 SPS Bolt Action Rifle

Cost	$0
Quantity	1
Lifespan	No Expiration
Funding Source	Personal Rifle

Manufacturer: Remington

Manufacturer Description: A semi-automatic shoulder-fired rifle with precision optics that fires a .308 Winchester cartridge. The .308 rifle provides SWAT Snipers the ability to engage hostile suspects at great distances with accuracy. The .308 rifles are used exclusively by officers assigned to the SWAT Sniper Team. These rifles are typically deployed with the SWAT Sniper Team during high-risk SWAT operations and special events or instances wherein Sniper Over Watch Teams are needed.

Remington Model 700 PSS Bolt Action Rifle

Cost	$0
Quantity	1
Lifespan	No Expiration
Funding Source	Personal Rifle

Manufacturer: Remington

Manufacturer Description: A semi-automatic shoulder-fired rifle with precision optics that fires a .308 Winchester cartridge. The .308 rifle provides SWAT Snipers the ability to engage hostile suspects at great distances with accuracy. The .308 rifles are used exclusively by officers assigned to the SWAT Sniper Team. These rifles are typically deployed with the SWAT Sniper Team during high-risk SWAT operations and special events or instances wherein Sniper Over Watch Teams are needed.

Ruger Precision Rifle Model 18028 Bolt Action Rifle

Cost	$0
Quantity	1
Lifespan	No Expiration
Funding Source	Personal Rifle

Manufacturer: Ruger

Manufacturer Description: A semi-automatic shoulder-fired rifle with precision optics that fires a .308 Winchester cartridge. The .308 rifle provides SWAT Snipers the ability to engage hostile suspects at great distances with accuracy. The .308 rifles are used exclusively by officers assigned to the SWAT Sniper Team. These rifles are typically deployed with the SWAT Sniper Team during high-risk SWAT operations and special events or instances wherein Sniper Over Watch Teams are needed.

Masterpiece Arms, Model PMR Pro .308 Rifle

Cost	$0
Quantity	1
Lifespan	No Expiration
Funding Source	Personal Rifle

Manufacturer: Masterpiece Arms

Manufacturer Description: A semi-automatic shoulder-fired rifle with precision optics that fires a .308 cartridge. The rifle provides SWAT Snipers the ability to engage hostile suspects at great distances with accuracy. The .308 rifles are used exclusively by officers assigned to the SWAT Sniper Team. These rifles are typically deployed with the SWAT Sniper Team during high-risk SWAT operations and special events or instances wherein Sniper Over Watch Teams are needed.

Colt M16A1 Rifle

Cost	$0 each
Quantity	15
Lifespan	No Expiration
Funding Source	1033/ LESO Program

Manufacturer: Colt

Manufacturer Description: Received from the military and converted to semi-automatic AR-15. (4) are currently in use in the Traffic Safety Unit. The traffic safety unit utilizes converted rifles to enhance the tactical capabilities when on their motorcycles to augment their service pistols when needed. (7) are in use by the Honor Guard for ceremonial display. Honor Guard members are sworn peace officers who have been specially chosen from all divisions of the department. Duties include providing funeral honors for officers who have been killed in the line of duty or other ceremonial duties as assigned. (4) are currently not in use.

Ti-Fighter 5.56mm Thread On Suppressor

Cost	$1,195 Each
Quantity	15
Lifespan	No Expiration
Funding Source	Grant Funding

Manufacturer: Ti-Fighter

Manufacturer Description: TI-Fighter 5.56 Thread On Suppressors are an attachment to the entry rifles used by the Department's SWAT team. The benefits of suppressors include noise reduction, reduced muzzle flash, reduced recoil, increased accuracy, and minimization of concussion impact. The suppressors are also capable of bringing rifle fire into approved OSHA standards.

The Department currently possesses the following rifle munitions:

Federal American Eagle 9MM Luger 147 GR Full Metal Jacket

Cost	$183/ Case
Quantity	105 Cases
Lifespan	No Expiration
Funding Source	General Fund

Manufacturer: Federal

Manufacturer Description: This Federal American Eagle 9mm Luger ammunition is loaded with a 147-grain Full Metal Jacket bullet. The Full Metal Jacket bullet is for range practice and reducing fouling in the barrel. The jacket extends from the nose to the base, preventing bullet expansion and barrel leading. This ammunition is new production, non-corrosive, ammo, featuring brass cases, boxer primed, and is reloadable.

Federal Gold Medal .223 55 Grain (GR) Rifle Round (Training)

Cost	$236/ Case
Quantity	56 of 150 Cases
Lifespan	No Expiration
Funding Source	General Fund

Manufacturer: Federal

Manufacturer Description: Federal 223 Remington ammo features a lead core 55 Grain Full Metal Jacket bullet that is nonmagnetic, non-corrosive boxer primer and new virgin brass casing that can be reloaded up to seven times for those high volume 223 ammo shooters that love to reload their 223 Remington ammunition. The Federal American Eagle 223BL ammo offers muzzle velocity of 3240 feet per second and muzzle energy of 1282 ft lbs.

Hornady 9MM Critical Duty 135 GR

Cost	$290/ Case
Quantity	14 of 25 Cases
Lifespan	No Expiration
Funding Source	General Fund

Manufacturer: Hornady

Manufacturer Description: This law enforcement cartridge offers match accuracy with a high ballistic coefficient providing superior long-range performance. The patented design eliminates clogging and aids in bullet expansion. A large mechanical jacket to core band works to keep the bullet and core from separating for maximum weight retention, excellent expansion, consistent penetration, and terminal performance through all FBI tactical handgun ammunition tests. The bright nickel-plated case simplifies chamber checks in reduced light and is loaded with low flash propellant to help preserve night vision in low light firing.

Hornady .223 55GR Tap Urban Rifle Round (Duty)

Cost	$160/ Case
Quantity	115 of 300 Cases
Lifespan	No Expiration
Funding Source	General Fund

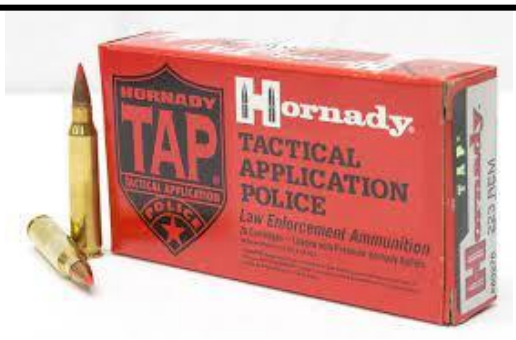

Manufacturer: Hornady

Manufacturer Description: Federal 223 Remington ammo features a lead core 55 Grain Full Metal Jacket bullet that is nonmagnetic, non-corrosive boxer primer and new virgin brass casing that can be reloaded up to seven times for those high volume 223 ammo shooters that love to reload their 223 Remington ammunition. The Federal American Eagle 223BL ammo offers a muzzle velocity of 3240 feet per second and muzzle energy of 1282 ft-lbs.

Hornady .308 Winchester A-Max Tap Rifle Round

Cost	$250/ Case
Quantity	22 of 60 Cases
Lifespan	No Expiration
Funding Source	General Fund

Manufacturer: Hornady

Manufacturer Description: This law enforcement cartridge offers match accuracy with a high ballistic coefficient providing superior long-range performance. This load demonstrates expansion and fragmentation similar to the 110-gr. load, but with a noticeable increase in penetration and retained bullet weight. This bullet penetrates glass with minimal deflection and exhibits excellent expansion and fragmentation characteristics.

Winchester 9MM 124 GR Full Metal Jacket

Cost	$282/ Case
Quantity	20 of 20 Case
Lifespan	No Expiration
Funding Source	General Fund

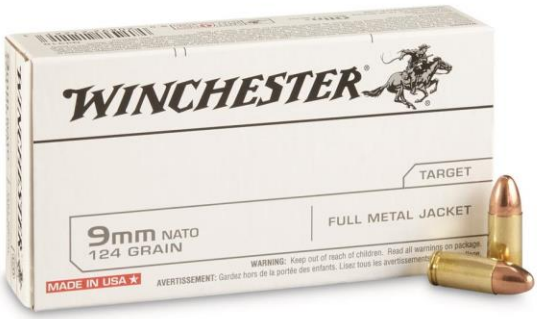

Manufacturer: Winchester

Manufacturer Description: This law enforcement cartridge is loaded with a 124-grain Full Metal Jacket bullet. The Full Metal Jacket bullet is ideal for range practice and is known for its reliability, consistent performance, and accuracy. The jacket extends from the nose to the base, preventing bullet expansion and barrel leading. This ammunition is new production, non-corrosive, ammo, featuring brass cases, boxer primed, and is reloadable.

Chemical Agents and Smoke Canisters (Category 12)

Canisters containing non-lethal chemical agents and/or smoke that are released when deployed.

Capability: Chemical agent and smoke canisters have a variety of individual capabilities and applications. Chemical agent and smoke canisters carry the agent into the environment in a variety of methods, including but not limited to powder, a liquid mist, smoke, pyrotechnic devices, and vapor aerosols. Exposure to chemical agents normally causes no lasting effects. This equipment has indoor and outdoor capabilities and uses.

Usage: The use of chemical agents causes mucous membranes and exposed skin to become inflamed resulting in a burning sensation. It provides a temporary respiratory effect and induces discomfort on the skin. Smoke canisters are used to create a diversion or conceal the movement of a tactical team. Chemical agents and smoke canisters may be utilized during confrontations with violent or potentially violent suspects, as a less lethal option to assist with dispersing violent crowds, and/or for the arrest of suspects.

Training Requirements: Sworn members utilizing chemical agent canisters are certified by POST less lethal and chemical agent instructors. Sworn members are trained in the proper use of chemical agent cannisters and smoke canisters, nomenclature, and documentation for the use of this equipment.

The Department currently possesses the following chemical agent and smoke canisters:

Defense Technology Flameless Tri-Chamber Safe-Smoke Canister #1032

Cost	$40 each
Quantity	5
Lifespan	5 Years
Funding Source	General Fund

Manufacturer: Defense Technology

Manufacturer Description: The design of the Tri-Chamber Flameless Saf-Smoke allows for the contents to burn within an internal can and disperse the agent safely with reduced risk of fire. Primarily designed for indoor tactical situations and will deliver about 20-25 seconds of burn time. Was designed for barricaded situations in mind to primarily detect and or dislodge a barricaded subject. The purpose of the Tri-Chamber Flameless Saf-Smoke is to minimize the risk to all parties through pain compliance and or incapacitation of potentially violent or dangerous subjects.

Defense Technology Flameless Tri-Chamber Safe-Smoke Canister #1033

Cost	$40 each
Quantity	4 of 10
Lifespan	5 Years
Funding Source	General Fund

Manufacturer: Defense Technology

Manufacturer Description: The design of the Tri-Chamber Flameless Saf-Smoke allows for the contents to burn within an internal can and disperse the agent safely with reduced risk of fire. Primarily designed for indoor tactical situations and will deliver about 20-25 seconds of burn time. Was designed for barricaded situations in mind to primarily detect and or dislodge a barricaded subject. The purpose of the Tri-Chamber Flameless Saf-Smoke is to minimize the risk to all parties through pain compliance and or incapacitation of potentially violent or dangerous subjects.

Defense Technology Military Style Saf-Smoke Canister #1063

Cost	$22 each
Quantity	30
Lifespan	5 Years
Funding Source	General Fund

Manufacturer: Defense Technology

Manufacturer Description: The Saf-Smoke canister was designed for training but may also be used in operations. The Saf-Smoke offers the same burn times as other smoke canisters making it an appropriate choice for training or simulation deployment of chemical agent canisters.

Defense Technology Maximum HC Smoke Large Style Canister #1073

Cost	$30 each
Quantity	14
Lifespan	5 Years
Funding Source	General Fund

Manufacturer: Defense Technology

Manufacturer Description: The Maximum HC Smoke is designed specifically for outdoor use in criminal riotous situations with a high-volume continuous burn that expels its payload in approximately 1.5-2 minutes through four gas ports located on the top of the canister. The smoke can be used to conceal tactical movement or route a crowd. The volume of smoke and agent is vast and obtrusive.

Defense Technology Maximum HC Smoke Military Style Canister #1083

Cost	$30 each
Quantity	8 of 10
Lifespan	5 Years
Funding Source	General Fund

Manufacturer: Defense Technology

Manufacturer Description: The Maximum HC Smoke is designed specifically for outdoor use in criminal riotous situations with a high-volume continuous burn that expels its payload in approximately 20-40 seconds through four gas ports located on the top of the canister. The smoke can be used to conceal tactical movement. The volume of smoke and agent is vast and obtrusive.

Defense Technology Han-Ball Grenade CN #1091

Cost	$40 each
Quantity	3
Lifespan	5 Years
Funding Source	General Fund

Manufacturer: Defense Technology

Manufacturer Description: The Han-Ball Grenade is a launchable grenade and is a maximum effect device that delivers three stimuli for psychological and physiological effects: light, sound and CS. This grenade is a launchable and combines loud report and flash with effects of chemical agents making it suitable for riot control situations.

Defense Technology Han-Ball Grenade CS #1092

Cost	$40 each
Quantity	103
Lifespan	5 Years
Funding Source	General Fund

Manufacturer: Defense Technology

Manufacturer Description: The Han-Ball Grenade is a launchable grenade and is a maximum effect device that delivers three stimuli for psychological and physiological effects: light, sound and CS. This grenade is a launchable and combines loud report and flash with effects of chemical agents making it suitable for riot control situations.

Defense Technology Flameless Expulsion Grenade Inert #2043

Cost	$40 each
Quantity	3 of 3
Lifespan	5 Years
Funding Source	General Fund

Manufacturer: Defense Technology

Manufacturer Description: The Inert Flameless Expulsion Grenade is a training device that will allow team members to deploy the grenade without effecting roll players. This compact, non-pyrotechnic, inert powder device provides safe expulsion without risk of fire. Unlike pyrotechnical grenades, this device's contents are expelled upon actuation of a CO2 cartridge that will affect a confined area of approximately 1500 square feet.

Breaching Tools (Categories 7, 10, & 14)

Tools that are used to gain entry into structures by defeating locks and/or fortifications. These tools include breaching shotguns and explosive breaching equipment.

Capability: A breaching shotgun can defeat lightly fortified or locked doors. Explosive breaching tools can defeat heavily fortified doors and structures. The listed breaching tools are utilized by SWAT operators and are capable of breaching glass, metal doors, wood doors, deadbolts, locks, and hinges.

Usage: Breaching (or forced entry) is used to rapidly access a locked or fortified room or structure to preserve life, affect and arrest, or to conduct a search when lawfully able to do so. Forced entry is strictly regulated and may only be done when legal parameters are met.

Training Requirements: Sworn members are trained in the proper use of the breaching shotgun. Explosive breacher(s) shall be licensed as a Blaster by Cal/OSHA. Explosive Breachers will attend an approved "Tactical Energetic Breaching" course.

The Department currently possesses the following explosive breaching tools:

Remington 870 Short Barrel Breaching Shotgun

Cost	$810 each
Quantity	2
Lifespan	25 Years
Funding Source	General Fund

Manufacturer: Remington

Manufacturer Description: This weapon allows breachers to safely utilize shotgun breaching rounds in order to destroy deadbolts, locks, and hinges. The stand-off that is attached to the end of the barrel allows for positive placement of the gun into the correct position and vents gases to prevent overpressure.

Combined Tactical Systems 12 Gauge Breaching Munition #2570

Cost	$7/ Box
Quantity	24 of 24 Boxes
Lifespan	No Expiration
Funding Source	General Fund

Manufacturer: Remington

Manufacturer Description: 12-gauge frangible slug to disrupt locking mechanisms and hinges, defeat and breach external and internal doors.

Defense Technology TKO 12 Gauge Breaching Round #3105

Cost	$7/ Box
Quantity	3 of 3 Boxes
Lifespan	No Expiration
Funding Source	General Fund

Manufacturer: Defense Technology

Manufacturer Description: The 12-Gauge **TKO** Breaching Round is a 12-Gauge shell loaded with a compressed zinc slug, utilizing smokeless powder as a propellant. The TKOP is capable of defeating door lock mechanisms, doorknobs, hinges, deadbolts safety chains and pad locks on both wooden or hollow core doors. Upon impact the zinc slug disintegrates into a fine powder eliminating fragmentation.

KBT (Kinetic Breaching Tool)

Cost	$10,750
Quantity	1
Lifespan	10 Years
Funding Source	Grant Funding

Manufacturer: KBT

Manufacturer Description: This kinetic energy tool was built to fill the gap between manual forced entry and explosive breaching. The KBT employs the best physics in the form of a self-contained impact ram with powder-actuated cartridges that go directly into a door or entryway. The device captures the force of the ram within the tool so there is no projectile or explosive energy that leaves the device. The KBT is designed to increase operator safety by allowing operators to breach from behind a shield or to the side of the door.

KBT (Kinetic Breaching Tool) .45 Caliber Blank Rounds

Cost	$2.97 Each
Quantity	287
Lifespan	No Expiration
Funding Source	Grant Funding

Manufacturer: KBT

Manufacturer Description: This kinetic energy tool operates by using a proprietary .45 caliber handgun blank and an eight (8) round cylinder for multiple breaches. Unlike explosive or shotgun breaching, all the force generated from the KBT is mechanically driven through a ram. This means that no projectile or explosive energy leaves the device except for the force of the ram which is permanently captured in the device.

Dyno Noble Inc. Primacord (UN0065)

Cost	$2/ Foot
Quantity	2945 Feet
Lifespan	10 Years
Funding Source	General Fund

Manufacturer: Dyno Nobel Inc.

Manufacturer Description: PRIMACORD is a detonating cord that is a thin, flexible plastic tube usually filled with pentaerythritol tetranitrate (PETN, pentrite). With the PETN exploding at a rate of approximately 6400m/s, any common length of detonation cord appears to explode instantaneously. It is a highspeed fuse which explodes, rather than burns, and is suitable for detonating high explosives. Explosive entry is a non-lethal force option, but it should only be used when you can justify that spending any length of time in front of a door with a mechanical breach would be too dangerous for the officer conducting the breach or that mechanical breaching would fail on a reinforced objective.

Nonel Lead Line (UN0349)

Cost	$1/ Foot
Quantity	5,000 Feet
Lifespan	10 Years
Funding Source	General Fund

Manufacturer: Dyno Nobel Inc.

Manufacturer Description: NONEL LEAD LINE provides maximum flexibility to the blaster in choosing a position of safety from which to initiate nonelectric blast rounds in either underground or surface applications. LEAD LINE propagates a low energy signal, similar to a dust explosion, at approximately 6500 ft/sec (2000 m/sec) along the tubes length with minimal disturbance to the outside of the tube.

Nonel Detonator Assembly Non-Elelctric (UN0361)

Cost	$15/ each
Quantity	110
Lifespan	10 Years
Funding Source	General Fund

Manufacturer: Dyno Nobel Inc.

Manufacturer Description: A detonator assembly is a small sensitive primary explosive device generally used to detonate a larger, more powerful and less sensitive secondary explosive such as a plastic explosive. Detonator assemblies come in a variety of types, including non-electric caps, electric caps, and fuse caps.

Training Summary

The safe use of certain controlled equipment requires ongoing training to maintain proficiency and required certifications. While the department conducts most ongoing training internally through the Professional Standards Unit, external training courses and services are also necessary. Training courses can vary each year depending on operational needs and State or Federal mandates. Consumable and non-consumable equipment are often used during training to ensure competency during actual operational use. Funding sources for training include the Police Department's operating budget and/or grants.

Training Costs

The personnel cost of training is absorbed into the Department's operating budget. The estimated cost for staff to attend externally hosted training for 2023 was approximately $9569.81.

The below table reflects the expended controlled equipment used during training in calendar year 2023.

Item	Used	Cost
Nonel Detonator Assembly Non-Elelctric (UN0361)	10	$150
Dyno Noble Inc. Primacord (UN0065)	55 feet	$110
KBT (Kinetic Breaching Tool) .45 Caliber Rounds	13	$38.61
Defense Technology 40mm Exact Impact Sponge Round #6325	6	$108
Defense Technology #8902 Noise Flash Device Low Role	3	$165
Combined Tactical Systems Inc. #7290-2 Noise Flash Device	1	$52
Combined Systems Inc. Super-Sock Beanbag Round #2581	64 Boxes	$2048
Federal American Eagle 9mm Luger, 147 Grain (Gr) FMJ	37 Cases	$6771
Hornady 9mm Luger 135 Grain Hollow Point	43 Cases	$12,470
Federal .223 55gr Rifle Round	41 Cases	$9,676
Hornady .223 55gr Rifle Round, Tap Urban	31 Cases	$4960
Hornady .308 Winchester 155gr Rifle Round, A-Max Tap	4 Cases	$1128
TOTAL:		$37,676

Equipment Costs

The following table summarizes equipment related expenditures for calendar year 2023 and the projected expenses in calendar year 2024. Equipment expenditures include the acquisition of new equipment, the replacement of damaged equipment, and the ongoing maintenance of the controlled equipment.

Equipment Type	Annual Maintenance (2023)	Projections (2024)
Unmanned Aircraft System	$18,955	$29,000
Robots	$0	$0
Armored Vehicles	$470	$1000
Mobile Incident Command	$1250	$3000
40 mm Less-Lethal Launchers	$300	$300
Less-Lethal Shotguns	$0	$0
Diversionary Devices	$0	$1,000
Rifles	$8,865	$1,000
Chemical Agents and Smoke Canisters	$0	$0
Breaching Tools	$11,641	$0
TOTAL	**$41,481**	**$35,300**

Fiscal Impact

The Milpitas Police Department is budgeted for 127 full-time employees which includes 94 full-time sworn officer positions and 34 non-sworn full-time professional staff positions. During Fiscal Year 2022/2023 the Police Department had an operating budget of $38,228,207.

Although the City of Milpitas adopts its operating budget on a fiscal year basis (beginning July 1st) the cost of controlled equipment expenditures is reflected in this report for calendar year 2023 as required by Assembly Bill 481.

During 2023, the Milpitas Police Department spent approximately $88,726.81 for controlled equipment and associated training. Some expenditures for controlled equipment were funded through State and/or Federal grants reducing the impact of acquiring, utilizing, maintaining, and training with controlled equipment to the Department's operating budget. Although a portion of these expenditures were paid for with grant funding, the total expenditures represent only 0.23% of the Police Department's operating budget.

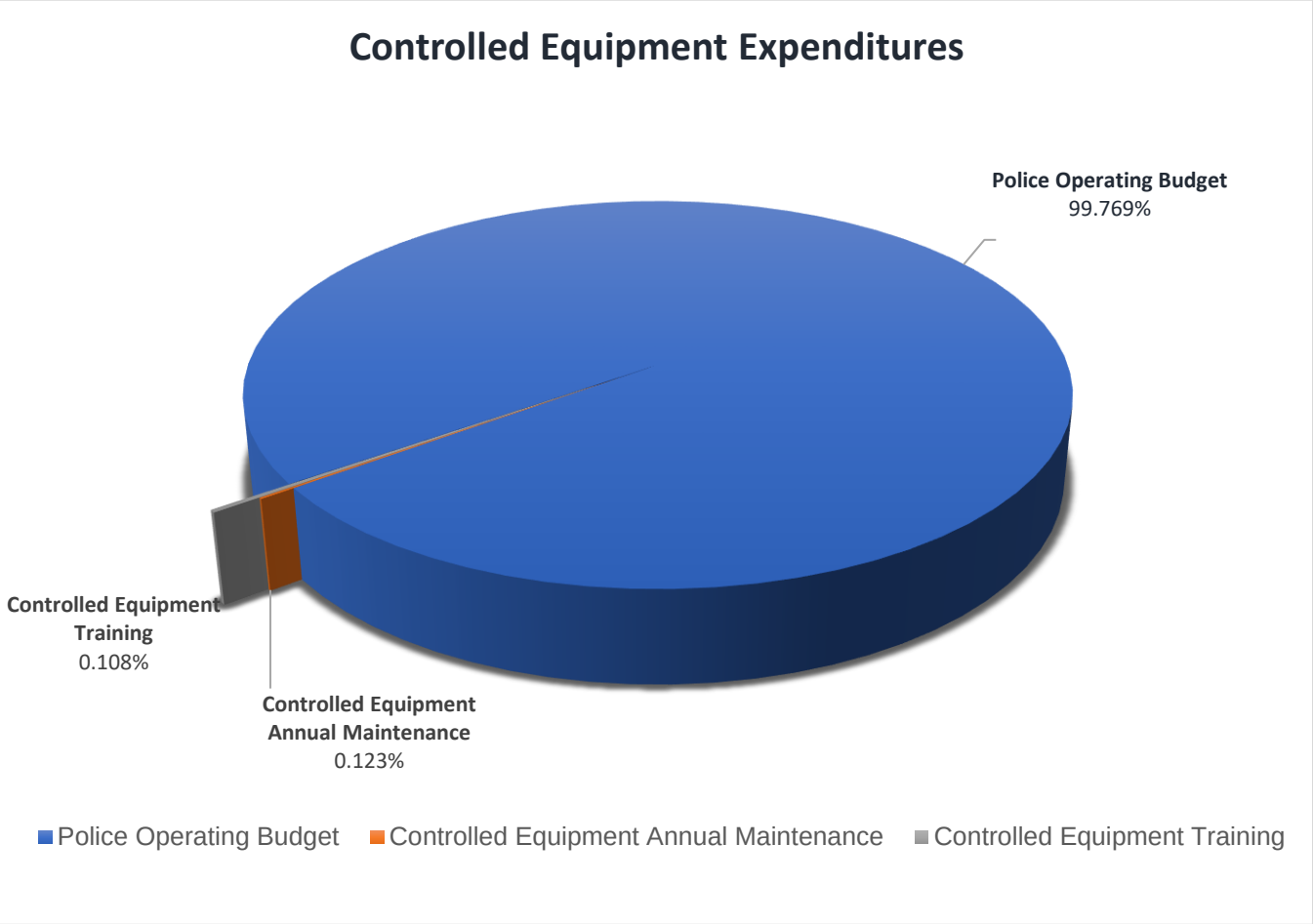

Projected Acquisitions for 2024

Although most acquisitions can be anticipated, the unanticipated replacement of existing controlled equipment may be necessary due to loss or damage. Replacement of these items will be handled on a case-by-case basis dependent on operational need, and in compliance with department policy for acquisition of controlled equipment.

Consumable Controlled Equipment

Consumable controlled equipment acquisitions for 2024 will remain consistent with current replenishment schedules and policies. Acquisitions will only restore quantities previously approved by the governing body.

Categories of consumable controlled equipment include:

- Ammunition – all calibers
- Chemical Agent and Smoke Canisters
- Specialty Munitions (40mm Munitions and Less Lethal Munitions)
- Diversionary Devices

Non-Consumable Controlled Equipment

Unmanned Aircraft Systems (UAS)
The Department is seeking to purchase one (1) additional DJI Matrice 30 Series UAS. The UAS enhances our service delivery capabilities and increases safety for our officers and the public. The DJI Matrice 30 Series is designed to function during harsh weather events. Having an additional DJI 30 Series will provide immediate resources if the primary DJI 30 becomes inoperable or for specific tactical missions. Funding for this purchase will come from a grant.

If grant funding is secured, the Department is also seeking to purchase four (4) DJI Avata UASs. The DJI Avata is compact, lightweight, and designed to maneuver in tight spaces. These unique capabilities are advantageous during a tactical mission. The DJI Avata is designed for rapid deployment and has enhanced safety features, such as an Emergency Brake system, and downward sensors for enhanced safety and low altitude flying.

Manufacturer Name and Model	Category	Quantity	Cost
DJI Matrice 30 Series	1	1	$25,000
DJI Avata	1	4	$4,000
TOTAL:			**$29,000**

Lifespan:
All UAS equipment, 3-5 years

Fiscal Impact:
No annual maintenance costs are expected.

Training:
All Department UAS operators are licensed by the Federal Aviation Administration for UAS operation. In addition, each operator must attend on going department training.

Pepperball VKS Pro Launcher
The Department is seeking to purchase four (4) Pepperball VKS Pro Launchers, and less-lethal live and training rounds associated with the VKS platform. The Pepperball VKS is a long-range, semi-automatic non-lethal launcher designed for law enforcement use. It is capable of firing projectiles and VXR (Variable Kinetic Rounds), which include impact, marking, and illuminating rounds. The VKS offers variable kinetic impact, meaning it can adjust the force of impact based on the situation, providing a versatile tool for non-lethal applications. Funding for this purchase will come from a grant.

Manufacturer Name and Model	Category	Quantity	Cost
Pepperball VKS Pro Launcher	14	4	$5500
Pepperball EL-2 Electronic Hopper, 160 round count	12	4	$650
Pepperball Glass Breaking Round, 100 round count	12	1	$270
Pepperball VXR Inert Round, 50 pack	12	2	$118
Pepperball Round Inert Training Round, 375 Pack	12	2	$657
Pepperball VXR Live-x OC Powder, 50 Pack	12	1	$213
Pepperball Round Live X OC Powder, 90 Pack	12	1	$255
Pepperball VXR Blue Ink, 50 Pack	12	1	$165
TOTAL:			**$7828**

Lifespan:
Pepperball VKS Pro Launcher – No Listed Expiration
Pepperball EL-2 Electronic Hopper - No Listed Expiration
Pepperball Glass Breaking Round - No Listed Expiration
Pepperball VXR Inert Round - No Listed Expiration
Pepperball Round Inert Training Round - No Listed Expiration
Pepperball VXR Live-x OC Powder - No Listed Expiration
Pepperball Round Live X OC Powder - No Listed Expiration
Pepperball VXR Blue Ink - No Listed Expiration

Fiscal Impact:
Annual Maintenance is approximately $50.

Training:
Prior to using a Pepperball VKS Pro Launcher, officers must be certified by Department Less-Lethal Instructors in the operation of the VKS Pro Launcher. Additionally, all members that operate any VKS Launcher are required to pass a qualification course during less-lethal qualification testing.

Department Transparency

In some instances, the application and use of controlled equipment may prompt questions or cause concern for community members.

The Milpitas Police Department strives to provide transparency on police activities, department policies, agency practices, and the use of controlled equipment. Remaining accountable to our community builds trust, confidence, and enhances community relationships. Prior to Assembly Bill 481, the Milpitas Police Department regularly presented equipment purchases and policies to the Public Safety and Emergency Preparedness Commission and utilizes various community engagement events to introduce our community to select controlled equipment including our Unmanned Aircraft Systems, Armored Rescue Vehicle, Mobile Incident Command Vehicle, and specialized SWAT equipment. We continue to use community events to create public awareness, transparency, and education.

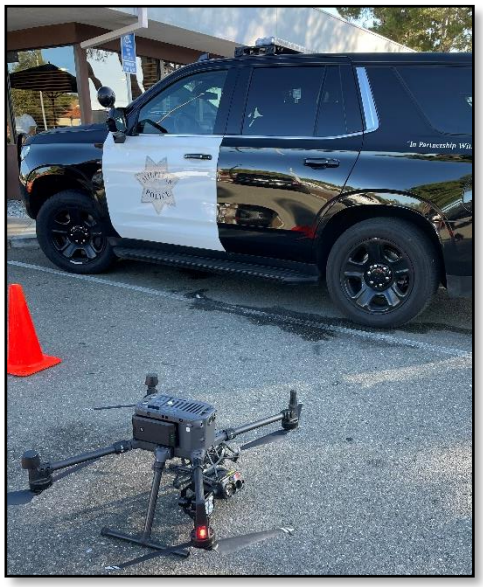

Controlled Equipment Coordinator Report

Although the Department remains transparent with our community, we may occasionally receive complaints about our policies, practices, and/or the use of controlled equipment. The Milpitas Police Department is committed to completing thorough and fair investigations of complaints. Resolving complaints in a fair, impartial, and expeditious manner helps maintain community trust and ensures the Milpitas Police Department will continue to provide superior service to our community.

The Milpitas Police Department has a designated Controlled Equipment Coordinator that is responsible for conducting controlled equipment inspections and audits to ensure compliance with Assembly Bill 481. The Controlled Equipment Coordinator is also the designated point of contact for receiving citizen complaints as well as tracking policy violations related to the use of controlled equipment.

Inventory

The Controlled Equipment Coordinator conducted an inventory check and identified controlled equipment that was not included in the inventory itemization reported during the annual report on Controlled Equipment Use for calendar year 2022. The inventory itemization in this report has been corrected to reflect the equipment not previously included.

Complaints

The Milpitas Police Department did not receive any citizen complaints about the use or possession of controlled equipment for calendar year 2023.

Policy Violations

The Milpitas Police Department did not identify any policy violations related to the deployment or use of controlled equipment for calendar year 2023.

Conclusion

The equipment, resources, and training outlined in this report allows the Milpitas Police Department to protect our community by enhancing public and officer safety. The use of controlled equipment aids us in resolving critical incidents safely and effectively. Although controlled equipment is utilized infrequently, it is crucial that the equipment be readily available in rapidly evolving and dynamic situations where such equipment can be used to effectively respond to threats of public safety.

When deciding how controlled equipment is funded, acquired, or used, the Milpitas Police Department considers the public's welfare, safety, and civil liberties. This annual controlled equipment report reaffirms the department's commitment to providing transparency and information to our communities and elected officials in addition to ensuring compliance with the law.

The department places high regard to meaningful public input in using controlled equipment in our community. Inquires, complaints or concerns can be submitted to the Milpitas Police Department's Controlled Equipment Coordinator via email at,

controlledequipmentcoordinator@milpitas.gov

For more information, please visit the police department's website at,

https://www.milpitas.gov/milpitas/departments/police

Appendix

Definitions

1. Governing Body- The legislative body of the City of Milpitas.

2. Controlled Equipment- Includes items defined by California Government Code section 7070, subsections (c)(1) through (c)(16).

3. "Controlled Equipment Impact Statement" means a publicly released, written document that includes, at a minimum, all of the following:

   (a) Description: A description of each type of Controlled Equipment, the quantity sought, its capabilities, expected lifespan, intended uses and effects, and how it works, including product descriptions from the manufacturer of the Controlled Equipment.

   (b) Purpose: The purposes and reasons for which the Milpitas Police Department (hereinafter, "Police Department") proposes to use each type of Controlled Equipment.

   (c) Fiscal Cost: The fiscal cost of each type of Controlled Equipment, including the initial costs of obtaining the equipment, the estimated or anticipated costs of each proposed use, the estimated or anticipated costs of potential adverse impacts, and the estimated or anticipated annual, ongoing costs of the equipment, including operating, training, transportation, storage, maintenance, and upgrade costs.

   (d) Impact: An assessment specifically identifying any potential impacts that the use of Controlled Equipment might have on the welfare, safety, civil rights, and civil liberties of the public, and what specific affirmative measures will be implemented to safeguard the public from potential adverse impacts.

   (e) Mitigations: Specific, affirmative technical and procedural measures that will be implemented to safeguard the public from such impacts.

   (f) Alternatives: Alternative method or methods by which the Police Department can accomplish the purposes for which the Controlled Equipment is proposed to be used, the annual costs of alternative method or methods, and the potential impacts of alternative method or methods on the welfare, safety, civil rights, and civil liberties of the public.

Appendix

Policy - Controlled Equipment (Military Equipment)

708.1 PURPOSE AND SCOPE
The purpose of this policy is to provide guidelines for the approval, acquisition, and reporting of use requirements of controlled equipment, also defined as "military equipment" pursuant to Assembly Bill 481 (Government Code § 7070; Government Code § 7071; Government Code § 7072).

708.1.1 DEFINITIONS
Definitions related to this policy include (Government Code § 7070):

Governing body – The elected or appointed body that oversees the Department.

Controlled Equipment – Includes items defined in California Government Code section 7070, subsections (c)(1) through (c)(16); and any other item deemed to be controlled equipment by the governing body.

708.2 POLICY
It is the policy of the Milpitas Police Department that members of this department comply with the provisions of Government Code § 7071 with respect to controlled equipment.

708.3 CONTROLLED EQUIPMENT COORDINATOR
The Chief of Police, or designee, shall act as the controlled equipment coordinator. The responsibilities of the controlled equipment coordinator include but are not limited to:

(a) Acting as a liaison to the governing body to meet the requirements of this policy.

(b) Identifying equipment currently owned or used by the Milpitas Police Department, and that equipment the Department intends to acquire or use, that qualifies as controlled equipment and ensuring compliance with legislative mandates.

(c) Conducting an annual inventory of all controlled equipment.

(d) Collaborating with any allied agency that may use controlled equipment within the City of Milpitas (Government Code § 7071).

(e) Preparing for, scheduling, and coordinating an annual community engagement meeting to include:

1. Publicly noticing the meeting no less than 30 days in advance.

2. Preparing for public inquiries regarding the department's funding, acquisition, and use of equipment.

(f) Preparing the annual controlled equipment report for submission to the Chief of Police and ensuring that the report is made available to the public on the department website (Government Code § 7072).

(g) Establishing a procedure for the public to register a complaint or concern, submit a question about the use of controlled equipment, and identify how the Department will respond.

708.4 CONTROLLED EQUIPMENT INVENTORY

A list of equipment currently held by the department or in coordination with another local agency is attached to this policy as Exhibit 1 and incorporated into this policy by reference. The inventory list will be updated each year as part of the annual report required pursuant to AB 481.

708.5 APPROVAL

The Chief of Police or the authorized designee shall obtain approval from the governing body by way of an ordinance adopting the controlled equipment policy. As part of the approval process, the Chief of Police or the authorized designee shall ensure the proposed controlled equipment policy is submitted to the governing body and is available on the department website at least 30 days prior to any public hearing concerning the controlled equipment (Government Code § 7071). The controlled equipment policy must be approved by the governing body prior to engaging in any of the following (Government Code § 7071):

(a) Requesting controlled equipment from the Federal Government pursuant to 10 USC § 2576a (Ex: 1033 Program)

(b) Seeking funds for controlled equipment, including but not limited to applying for a grant, soliciting or accepting private, local, state, or federal funds, in-kind donations, or other donations or transfers.

(c) Acquiring controlled equipment either permanently or temporarily, including by borrowing or leasing.

(d) Collaborating with another law enforcement agency in the deployment or other use of controlled equipment within the jurisdiction of this department.

(e) Using any new or existing controlled equipment for a purpose, in a manner, or by a person not previously approved by the governing body.

(f) Soliciting or responding to a proposal for, or entering into an agreement with, any other person or entity to seek funds for, apply to receive, acquire, use, or collaborate in the use of controlled equipment.

(g) Acquiring controlled equipment through any means not provided above.

708.6 EXIGENCY- PROCUREMENT AND USE
Nothing in this policy shall prohibit the procurement or use of controlled equipment when exigent circumstances exist. In rare circumstances, exigent circumstances may occur where the immediate procurement and use of controlled equipment may be necessary to preserve life, prevent physical harm to officers or other persons, prevent the destruction of relevant evidence, prevent the escape of the suspect, or maintain public safety. In the event such an event occurs, the Chief of Police or the authorized designee may authorize the procurement and use of controlled equipment. Any exigent procurement and/or use of controlled equipment will be reported to the governing body, in writing, unless such information is confidential or privileged under local, state, or federal law.

708.7 ANNUAL REPORT
Upon approval of a controlled equipment policy, the Chief of Police or their authorized designee shall submit a controlled equipment report to the governing body for each type of controlled equipment approved within one year of approval, and annually thereafter for as long as the controlled equipment is available for use (Government Code § 7072).

The Chief of Police or the authorized designee shall also make each annual controlled equipment report publicly available on the department website for as long as the controlled equipment is available for use. The report shall include all information required by Government Code § 7072 for the preceding calendar year for each type of controlled equipment in department inventory.

708.8 COMMUNITY ENGAGEMENT
Within 30 days of submitting and publicly releasing the annual report, the Department shall hold at least one well-publicized and conveniently located community engagement meeting, at which the Department should discuss the report and respond to public questions regarding the funding, acquisition, or use of controlled equipment.

708.9 MAINTENANCE AND RESUPPLY OF CONTROLLED EQUIPMENT
In the event a previously approved supply of controlled equipment falls below the approved quantity, the Department may replenish the supply, as needed, without first obtaining additional approval from the Governing Body.

CITY OF MILPITAS
Public Safety and Emergency Preparedness Commission

MEETING MINUTES
7:00 p.m.
Thursday, March 21, 2024
City Hall Committee Room

CALL TO ORDER	Chair Berryhill called the meeting to order at 7:01 P.M.
PLEDGE of ALLEGIANCE	Chair Berryhill led the pledge of allegiance.
ROLL CALL	Chair Berryhill called the roll. **PRESENT**: Ellis, Clendenin, Berryhill, Nakapalau, Gan, Luu, Cacao, Yip-Chuan, Councilmember Lien, Lt. Sanchez, Battalion Chief Severson, OEM Coordinator Charlop **ABSENT**: Nichols, Sun
SEATING OF ALTERNATES	Luu
APPROVAL OF AGENDA	Motion/Second: Clendenin/Nakapalau, all ayes Motion carried by a vote of all AYES.
APPROVAL OF MINUTES	Motion/Second: Clendenin/Ellis Abstention: Ellis Motion carried by a vote all AYES.
PUBLIC FORUM	None.
ANNOUNCEMENTS	City hosted the 70th Anniversary Party and the Lunar New Year Celebration.
PRESENTATIONS	None.
BUSINESS ITEMS	A. 2024 Work Plan Updates: 1. Police Subcommittee: Reaching out to provide presentations to the community. 2. Fire Subcommittee: Provided presentation. 3. Emergency Preparedness Subcommittee: Provided presentation.

LIAISON REPORT

A. Council Report (Councilmember Lien):
   a. CM Lien attended the National League of Cities Conference in Washington, DC.
   b. Congressman Ro Khanna funded a grant of $500K for the Main Street revitalization.
   c. On Saturday, 3/23 Milpitas Rotary Club, City of Milpitas, Troop 163, Troop 2163, and Our City Forest organization that provided the trees, equipment, and guidance on planting trees at Pinewood Park. Milpitas Rotary Club will provide lunch for all volunteers.
   d. On April 6, another Arbor Day at Pinewood. (No lunch will be provided)
   e. Thanks to Santa Clara District Attorney Jeff Rosen and Milpitas Chief of Police Jared Hernandez for hosting the forum on Retail Theft. Raising awareness to business owners to combat Retail Theft.

B. MUSD Report (Schoolboard Member Yip-Chuan):
   a. MUSD got a $2 million grant for career technical Education initiatives that will be used to support our new programming at the Milpitas High School Extension and enhancing our Milpitas High School academies.
   b. Russell Middle School is now a distinguished school based on its data in the dashboard which can be found by googling CDE dashboard.
   c. Calaveras Hills High School applied for, was reviewed and visited by the state, and is now a model alternative High School for the state of California.

C. Emergency Management Report (OEM Coordinator Charlop):
   a. New Member CERT class 4/6, 4/13, 4/20 registration is around 12 attendees so far.
   b. OEM will work with RACES to develop a RACES/CERT drill on May 11 for current CERT members.
   c. RACES: removed RACES gear from the OEM portable. They have inventoried the equipment and are waiting on $10k in grant funding to replace old equipment.

D. Fire (BC Severson):
   a. Women's history month (Kristen Cunningham- Heather Fisher)
   b. MFD re-classified a haz-mat inspector position to a 40-hour battalion chief spot.
   c. FF recruitment
   d. Joint Fire PD EOC/PSAP
   e. MFD welcomed a new Haz Mat inspector.
   f. MFD hosting mass casualty incident drill on 4/21/24.

E. Police (Lt. Sanchez):
   a. Lt. Sanchez provided current staffing numbers. MPD continues to look to hire new officers.
   b. Lt. Sanchez provided the AB481 draft report presentation.

ADJOURNMENT Chair Berryhill adjourned the meeting at 8:06 PM

Next meeting is May 16,2024

CITY OF MILPITAS
AGENDA REPORT
(AR)

Item Title:	**Adopt a Resolution Granting Acceptance of ARPA Park Rehabilitation Phase 1, Project No. 3500, Authorizing the Public Works Director to File a Notice of Completion, and Authorizing the City to Issue a Notice of Final Acceptance after the One-Year Warranty (Staff Contact: Christian Di Renzo, Public Works Director, 408-586-2602)**
Category:	Consent Calendar-Community Development
Meeting Date:	5/21/2024
Recommendation:	Adopt a resolution granting acceptance of ARPA Park Rehabilitation Phase 1, Project No. 3500, authorizing the Public Works Director to file a Notice of Completion, and authorizing the Public Works Director to issue a Notice of Final Acceptance after the one-year warranty.

BACKGROUND:
On August 9, 2021, the City Council approved an allocation of $4,386,815 of American Rescue Plan Act (ARPA) funding to address immediate health and safety and short-term improvements of parks in critical and poor condition at 20 parks identified in the Parks and Recreation Master Plan adopted in December 2021. On December 6, 2022, the City Council awarded a construction contract to G&G Builders Inc. for the ARPA Park Rehabilitation Phase 1, Project No. 3500 in the amount of $1,116,000 for the rehabilitation of nine (9) parks. This project is partially funded by a Per Capita Grant from the State Department of Parks and Recreation in the amount of $224,543 to be allocated for park improvements at Sunnyhills Augustine Park.

The nine (9) parks in Phase 1 included Sunnyhills Augustine Memorial, Cerano, John McDermott, O'Toole Elms, Parc Metro Central, Parc Metro East, Pinewood, Selwyn, and Tom Evatt. This project provided much needed play structure and play surface repairs while updating the parks to current Certified Playground Safety Inspector (CPSI) standards. Phase 1 was mostly completed in December 2023 except for some minor enhancements at Sunnyhills Augustine Memorial, Cerano, and Selwyn Parks completed in April 2024.

On April 2, 2024, the City Council awarded a construction contract to Bay Construction Co. for ARPA Parks Rehabilitation Phase 2, Project 3501 to address healthy and safety repairs and short-term improvements of parks in "poor" and "critical" conditions at 13 parks. Phase 2 will focus on ADA compliance, replacing aging site furnishings, improving and repairing picnic areas and pathways, improving fitness station and playground areas, and upgrading restroom fixtures to comply with current 2022 Building Codes. A total of $120,000 in project savings from Phase 1 was reallocated to fund Phase 2.

ANALYSIS:
ARPA Park Rehabilitation Phase 1, Project No. 3500 was successfully completed on time and within budget. Staff recommends that City Council adopt a resolution granting acceptance of the Project and authorizing the Public Works Director to file a Notice of Completion in accordance with the provisions of Section 9204 of the Civil Code. Staff also recommends the City Council authorize the Public Works Director to issue a notice of final acceptance after the one-year warranty period without further City Council action, provided that all warranty work is completed to the satisfaction of the Public Works Director.

POLICY ALTERNATIVE:
Alternative: Do not adopt Resolution and deny Project acceptance, deny filling a notice of completion and not begin the one-year warranty.
Pros: None
Cons: A denial would result in the City being unable to commence the one-year warranty, release the retention to the Contractor and release any funds remaining back into the Project budget.

Reason not Recommended: Denial would result in the City being unable to close out the Project and release any funds remaining back into the Project budget.

FISCAL IMPACT:
No additional funding is requested for ARPA Park Rehabilitation Phase 1, Project No. 3500 as the project is now complete. The Public Works Department has sufficient budget for ongoing maintenance of these parks.

CALIFORNIA ENVIRONMENTAL QUALITY ACT:
This Project is exempt from CEQA under Class 1 - Section 15301 - Existing Facilities because they relate to the operation, repair, maintenance or minor alterations to a public facility involving no or negligible expansion of use.

RECOMMENDATIONS:
Adopt a resolution granting acceptance of ARPA Park Rehabilitation Phase 1, Project No. 3500, authorizing the Public Works Director to file a Notice of Completion, and authorizing the Public Works Director to issue a Notice of Final Acceptance after the one-year warranty.

ATTACHMENTS:
(a) Resolution

RESOLUTION NO. _____

A RESOLUTION OF THE CITY COUNCIL OF THE CITY OF MILPITAS GRANTING ACCEPTANCE OF ARPA PARK REHABILITATION PHASE 1, PROJECT NO. 3500

WHEREAS, the City of Milpitas has heretofore entered into a contract with G&G Builders Inc., for ARPA Park Rehabilitation Phase 1, Project No. 3500, in the amount of $1,218,473.37 ("Project"), and the Public Works Director of the City of Milpitas has recommended acceptance of said improvements as completed in accordance with plans, specifications and approved change orders and correction lists, and in accordance with the final inspection of said Public Works Director.

NOW, THEREFORE, the City Council of the City of Milpitas hereby finds, determines, and resolves as follows:

1. The City Council has considered the full record before it, which may include but is not limited to such things as the staff report, testimony by staff and the public, and other materials and evidence submitted or provided to it. Furthermore, the recitals set forth above are found to be true and correct and are incorporated herein by reference.

2. The City of Milpitas does hereby accept said improvements as completed on this 21st day of May, 2024, and does hereby authorize and direct the Public Works Director of the City of Milpitas to file a Notice of Completion in accordance with the provisions of Section 9204 of the Civil Code of the State of California, and does hereby authorize and direct the Public Works Director to file a Certificate of Completion in accordance with the provisions of Section 4005 of the Government Code of the State of California, if said work was by day's labor or force account.

3. The City Council authorizes the Public Works Director to issue the Notice of Final Acceptance after the one-year warranty period without further City Council action, provided all required warranty repairs are completed to the satisfaction of the Public Works Director; and nothing herein contained shall in any way be deemed to be a waiver, release or relinquishment by City of any obligations imposed upon the contractor or its surety, or sureties, by law or by the above-referenced improvement contract, save and except those obligations specifically mentioned herein.

PASSED AND ADOPTED this _____ day of _____, 2024 by the following vote:

AYES:

NOES:

ABSENT:

ABSTAIN:

ATTEST:

APPROVED:

_____
Suzanne Guzzetta, City Clerk

_____
Carmen Montano, Mayor

APPROVED AS TO FORM:

_____
Michael Mutalipassi, City Attorney

Recording Requested by and
When Recorded Mail to:

City of Milpitas
455 East Calaveras Boulevard
Milpitas, CA 95035
Attention: City Clerk

Record without fee under
Section 6103 - Government Code
State of California

CITY OF MILPITAS
NOTICE OF COMPLETION
(Civil Code Section 9204)

NOTICE IS HEREBY GIVEN:

1. On or about December 19, 2022, the City Council of the City of Milpitas, a municipal corporation of the State of California, whose address is City Hall, 455 East Calaveras Boulevard, Milpitas, California, 95035 (as owner) entered into a contract for work of: **ARPA Park Rehabilitation Phase 1, Project No. 3500**.

2. A description of the site of which the City is co-owner for said work of improvement is: **Sunnyhills Augustine Memorial, Cerano, John McDermott, O'Toole Elms, Parc Metro Central, Parc Metro East, Pinewood, Selwyn, and Tom Evatt Parks** in the City of Milpitas, Santa Clara County, California, more particularly described on the plans.

3. The name and address of the direct contractor is: **G&G Builders Inc., 4542 Contractors Place, Livermore, CA 94551.**

4. A general statement of the kind of work done or materials furnished to the City is as follows: **The Project provides for the much needed play structure and play surface repairs while updating the parks to current Certified Playground Safety Inspector (CPSI) standards at nine (9) parks.**

5. Said work of improvement was accepted by the Milpitas City Council as complete on May 21st, 2024.

****

I, the undersigned, declare that I am the **Public Works Director** of the City of Milpitas and am authorized to execute the foregoing Notice of Completion and this Verification thereof. I have read the foregoing Notice of Completion. I declare under penalty of perjury that the foregoing Notice of Completion is true and correct. Executed on _____, 2024 at Milpitas, California.

_____
Christian Di Renzo, Public Works Director,
City of Milpitas

NOTE: RECORD WITHIN 15 DAYS OF ACCEPTANCE WITH COUNTY RECORDER OF SANTA CLARA COUNTY

CITY OF MILPITAS
AGENDA REPORT
(AR)

Item Title:	**Receive Final Update on Storm Drain System Emergency Repairs and Improvements at Evans Road and Piedmont Creek, Terminate the Emergency Declaration, and Adopt a Resolution Granting Acceptance of the Emergency Declaration - Storm Drain System Repairs and Improvements (Staff Contact: Christian Di Renzo, Public Works Director, 408-586-2602)**
Category:	Consent Calendar-Community Services and Sustainable Infrastructure
Meeting Date:	5/21/2024
Recommendation:	(1) Receive an update on the emergency repairs and improvements at Evans Road and Piedmont Creek; (2) Approve the termination of the emergency declaration; and (3) Adopt a resolution granting acceptance of Storm Drain System Repairs and Improvements at Evans Road and Piedmont Creek, Project No. 24-044 and 24-045, and authorizing the Public Works Director to file a Notice of Completion and issue a Notice of Final Acceptance after the one-year warranty.

BACKGROUND:

Pursuant to Public Contract Code section 22050 and the attached Council Resolution No. 9134, the Director of Public Works, in the case of emergency, may authorize a repair of a public facility and procure the work without giving notice for bids. An emergency is defined as "a sudden, unexpected occurrence that poses a clear and imminent danger, requiring immediate action to prevent or mitigate the loss or impairment of life, health, property, or essential public services." Additionally, State law requires the Public Works Director, as the City official with delegated authority to take emergency action, to report any emergency authorization and the reason(s) for the authorization to the City Council not later than seven days after the action, or at its next regularly scheduled meeting, if that meeting will occur not later than 14 days after the action. Further, the Public Works Director is required to report why the emergency would not permit a delay resulting from a competitive solicitation for bids and the City Council is required to review the emergency action at every regularly scheduled meeting thereafter until the emergency repair is completed. The City Council shall continue to review the emergency action at every regularly scheduled meeting thereafter until the action is terminated. At each review, the City Council shall determine, by a four-fifths vote, whether there is a need to continue the action.

Consistent with applicable State law and Council Resolution 9134, on November 21, 2023, the Public Works Director declared an emergency and authorized the City to contract with local contractor, Able Construction Inc., for the storm drain system emergency repairs and improvements at Evans Road and Piedmont Creek. Further, the Public Works Director informed the City Council within the required timeframe via the attached Information Memorandum on November 21, 2023 regarding the emergency authorization, the reasons for the authorization, and the cost for repair in the amount of $137,519.

ANALYSIS:

The City entered into two agreements with Able Construction Group, Inc. (Contractor) on December 14, 2023 and December 18, 2023 for storm drain repairs and improvements at Evans Road and Piedmont Creek, respectively. Subsequently, the City issued a Notice-to-Proceed to the Contractor to commence work beginning December 18, 2023.

Prior to any field activities taking place and consistent with Public Works standard procedures, the Contractor is required to provide the City with a project schedule, submittals of approved materials and products to be used for the project as well as a traffic and pedestrian control plan, should any City right-of-way be impacted by the construction activities.

The City conducted a kick-off meeting with the Contractor on January 17, 2024. It was determined the Project would not affect the right-of-way; therefore traffic or pedestrian control was not required at that time. The Contractor provided the City with submittals of products and materials to be used for both phases of the project, which the City reviewed and approved. The Contractor commenced the construction activities on Piedmont Creek the week of February 12, 2024 and substantially completed the improvements the week of February 20, 2024 per project plans and specifications. The first progress payment for improvements at Piedmont Creek was submitted the week of March 4th. The work at Evans Road commenced the week of February 20, 2024 and was substantially completed the week of March 18, 2024. A change order was issued for fabrication and installation of the metal grate cover for the concrete storm drain inlet in the amount of $8,795. Fabrication of the metal grate was completed on April 26th and installed on April 29th. The schedule of this phase was prolonged due to the lead time of fabrication and delivery of a non-standard metal grate cover.

The City performed a site walkthrough on April 23, 2024 to ensure the improvements at both locations were completed per project plans and specifications and were satisfactorily restored to pre-construction conditions. A punch-list was issued for any outstanding items which were completed within a few days.

The Public Works Director has determined that emergency repairs for storm drain improvements at Piedmont Creek and Evans Road have been completed and is therefore terminating the emergency declaration.

Staff recommends that City Council adopt a resolution (**Attachment**) granting acceptance of the Project and authorizing the Public Works Director to file a Notice of Completion in accordance with the provisions of Section 9204 of the Civil Code. Staff also recommends the City Council authorize the Public Works Director to issue a notice of final acceptance after the one-year warranty period without further City Council action, provided that all warranty work is completed to the satisfaction of the Public Works Director.

POLICY ALTERNATIVE:
Alternative: Do not rescind the emergency declaration, do not adopt Resolution, deny Project acceptance, and deny filling a notice of completion and not begin the one-year warranty.
Pros: None
Cons: A denial would result in the City being unable to rescind the emergency declaration and commence the one-year warranty, release the retention to the Contractor and release any funds remaining back into the Project budget.
Reason not Recommended: Denial would result in the City being unable to close out the Project and release any funds remaining back into the Project budget.

FISCAL IMPACT:
Funding for the storm drain system emergency repairs and improvements at Evans Road and Piedmont Creek was encumbered through the Capital Improvement Program Project No. 3715 - Storm Drain System Rehabilitation Project in the amount of $146,314. Funding source comes from the Storm Drain General Fund and Storm Drain Fund.

CALIFORNIA ENVIRONMENTAL QUALITY ACT:
The emergency repair work is exempt from CEQA, per CEQA Guidelines Section 15301, Existing Facilities and 15302, Replacement or Reconstruction.

RECOMMENDATIONS:
(1) Receive an update on the emergency repairs and improvements at Evans Road and Piedmont Creek;
(2) Approve the termination of the emergency declaration; and
(3) Adopt a resolution granting acceptance of Storm Drain System Repairs and Improvements at Evans Road and Piedmont Creek, Project No. 24-044 and 24-045, and authorizing the Public Works Director to file a Notice of Completion, and to issue a Notice of Final Acceptance after the one-year warranty.

ATTACHMENTS:
Resolution

RESOLUTION NO. _____

A RESOLUTION OF THE CITY COUNCIL OF THE CITY OF MILPITAS GRANTING ACCEPTANCE OF EMERGENCY DECLARATION STORM DRAIN SYSTEM REPAIRS AND IMPROVEMENTS AT EVANS ROAD AND PIEDMONT CREEK, PROJECT NO. 24-044 AND 24-045

WHEREAS, the City of Milpitas has heretofore entered into a contract with Able Construction Group, Inc., for Emergency Declaration Storm Drain System Repairs and Improvements at Evans Road and Piedmont Creek, Project No. 24-044 and 24-045, in the amount of $146,314 ("Project"), and the Public Works Director of the City of Milpitas has recommended acceptance of said improvement as completed in accordance with plans, specifications and approved change orders and correction lists, and in accordance with the final inspection of said Public Works Director.

NOW, THEREFORE, the City Council of the City of Milpitas hereby finds, determines, and resolves as follows:

1. The City Council has considered the full record before it, which may include but is not limited to such things as the staff report, testimony by staff and the public, and other materials and evidence submitted or provided to it. Furthermore, the recitals set forth above are found to be true and correct and are incorporated herein by reference.

2. The City of Milpitas does hereby accept said improvement as completed on this 21st day of May, 2024, and does hereby authorize and direct the Public Works Director of the City of Milpitas to file a Notice of Completion in accordance with the provisions of Section 9204 of the Civil Code of the State of California, and does hereby authorize and direct the Public Works Director to file a Certificate of Completion in accordance with the provisions of Section 4005 of the Government Code of the State of California, if said work was by day's labor or force account.

3. The City Council authorizes the Public Works Director to issue the Notice of Final Acceptance after the one-year warranty period without further City Council action, provided all required warranty repairs are completed to the satisfaction of the Public Works Director; and nothing herein contained shall in any way be deemed to be a waiver, release or relinquishment by City of any obligations imposed upon the contractor or its surety, or sureties, by law or by the above-referenced improvement contract, save and except those obligations specifically mentioned herein.

PASSED AND ADOPTED this _____ day of _____, 2024 by the following vote:

AYES:

NOES:

ABSENT:

ABSTAIN:

ATTEST:

_____
Suzanne Guzzetta, City Clerk

APPROVED:

_____
Carmen Montano, Mayor

APPROVED AS TO FORM:

_____
Michael Mutalipassi, City Attorney

Recording Requested by and
When Recorded Mail to:

City of Milpitas
455 East Calaveras Boulevard
Milpitas, CA 95035
Attention: City Clerk

Record without fee under
Section 6103 - Government Code
State of California

CITY OF MILPITAS
NOTICE OF COMPLETION
(Civil Code Section 9204)

NOTICE IS HEREBY GIVEN:

1. On or about December 14, 2023, the City Council of the City of Milpitas, a municipal corporation of the State of California, whose address is City Hall, 455 East Calaveras Boulevard, Milpitas, California, 95035 (as owner) entered into a contract for work of: **Emergency Declaration Storm Drain System Repairs and Improvements at Evans Road and Piedmont Creek, Project No. 24-044 and 24-045.**

2. A description of the site of which the City is co-owner for said work of improvement is: **666 Evans Road and Piedmont Creek** in the City of Milpitas, Santa Clara County, California, more particularly described on the plans.

3. The name and address of the direct contractor is: **Able Construction Group Inc, 1020 Ruff Drive, San Jose, CA 95110.**

4. A general statement of the kind of work done or materials furnished to the City is as follows: **The Project provides for storm drain system and creek vortex weir repairs.**

5. Said work of improvement was accepted by the Milpitas City Council as complete on _____, 2024.

****

I, the undersigned, declare that I am the **Public Works Director** of the City of Milpitas and am authorized to execute the foregoing Notice of Completion and this Verification thereof. I have read the foregoing Notice of Completion. I declare under penalty of perjury that the foregoing Notice of Completion is true and correct. Executed on _____, 2024 at Milpitas, California.

_____
Christian DiRenzo, Public Works Director,
City of Milpitas

NOTE: RECORD WITHIN 15 DAYS OF ACCEPTANCE WITH COUNTY RECORDER OF SANTA CLARA COUNTY

CITY OF MILPITAS
AGENDA REPORT
(AR)

Item Title:	**Approve Agreements and Related Amendments with the County of Santa Clara for the Collection of AB939 Implementation Fees and Administration of the Countywide Household Hazardous Waste (HHW) Collection Program (Staff Contact: Christian Di Renzo, Public Works Director, 408-586-2602; and Elaine Marshall, Deputy Public Works Director, 408-586-2603)**
Category:	Consent Calendar-Community Services and Sustainable Infrastructure
Meeting Date:	5/21/2024
Recommendation:	Approve and authorize the City Manager to execute two agreements and related amendments with the County of Santa Clara for (1) Collection of AB939 Implementation Fees and (2) Administration of the Countywide Household Hazardous Waste (HHW) Collection Program for the term July 1, 2024 – June 30, 2027.

BACKGROUND:

The California Integrated Waste Management Act (IWMA) of 1989 (AB939) requires jurisdictions to enact plans and to implement programs to meet the mandatory state waste diversion goals of 25% by 1995 and 50% by 2000. As a result, the City of Milpitas, along with other California local jurisdictions including the Santa Clara County cities and the County of Santa Clara, developed plans and implemented programs to divert solid waste from landfills through source reduction, recycling, and composting activities. In 1992, Santa Clara County established a Countywide AB939 Implementation Fee to pay for the costs of preparing, adopting, and implementing these integrated waste management plans and programs. The AB939 Fee is imposed on every ton of waste that is landfilled or incinerated in Santa Clara County. The Santa Clara County Board of Supervisors has approved reimposing the AB939 Fee for Fiscal Years 2025, 2026, and 2027 (July 1, 2024 through June 30, 2027) at $4.10 per ton of waste landfilled or incinerated in the County. The Fee consists of two parts: 1) a Program Fee of $1.50 per ton to assist in funding the costs of preparing, adopting, and implementing the integrated waste management plan in the fifteen incorporated cities and unincorporated area of the County; and 2) a Household Hazardous Waste (HHW) Fee of $2.60 per ton to provide funding to implement the Countywide Household Hazardous Waste Program.

Household hazardous waste products are prohibited from landfills and require proper handling and disposal. The Countywide HHW program collects household hazardous materials such as batteries, electronics, fluorescent and LED lightbulbs, household cleaners, and paint, and properly disposes of them.

The County of Santa Clara continues to coordinate and execute annual agreements with participating cities (Campbell, Cupertino, Gilroy, Los Altos, Los Altos Hills, Los Gatos, Milpitas, Monte Sereno, Morgan Hill, Mountain View, Palo Alto, San José, Santa Clara, Saratoga and Sunnyvale) which authorize the County to collect the fees, remit the Program Fee to local jurisdictions, and retain the HHW Fee for program administration and implementation.

ANALYSIS:

Agreement for Countywide AB939 Implementation Fee

The Agreement for the Countywide AB939 Implementation Fee authorizes the County to collect fees from July 1, 2024 through June 30, 2027, upon approval by all participating cities and the County, and continues funding local solid waste and recycling program planning and implementation. Per this agreement, the County will continue to collect $4.10 per ton of waste disposed at landfills within the County in Fiscal Years 2025, 2026 and 2027. This fee has not increased since FY 2009-2010. From this fee, the County will remit $1.50 per ton to the city of waste origin. Through this agreement the City of Milpitas has annually received approximately $120,000 to $150,000, which is recognized as revenue in Fund 280 Solid Waste Reduction and Services Fund. The fund supports the City's implementation of the solid waste and recycling program.

Agreement for Countywide Household Hazardous Waste (HHW) Collection Program

The Countywide HHW Collection Program agreement allows Milpitas to continue participation in the County's long-standing HHW program and services from July 1, 2024 to June 30, 2027. In keeping with previous renewals, each cycle of these agreements covers a three-year period (the current agreement expires on June 30, 2024). After the first year of the HHW Collection Program agreement, each City executes a First Amendment, then a Second Amendment in the final year, before the agreements must be renewed for a new three-year cycle. The amendments provide an annual funding projection based on estimated participation rates and a funding reconciliation based on actual participation numbers.

The County HHW program allows residents to bring HHW to either free temporary HHW drop-off events throughout the County, including an annual event in Milpitas, or to make an appointment to drop-off HHW at the permanent sites in San José or San Martin. Due to required safety protocols for handling of HHW, the County HHW Program drop-off events are held separate from other cleanup events. In fiscal year 2023, Milpitas residents disposed of 1,432 loads through the HHW program. This amount includes the annual temporary event hosted by Milpitas (June 2023), in which the HHW program collected 551 total loads, of which 519 were from Milpitas residents.

The County will use the HHW Fee portion of the AB939 fees ($2.60 per ton) to provide HHW collection services to residents throughout the County. The County administers the funds and deducts the costs of providing the HHW program out of the annual fees collected on waste originating from Milpitas. Any funds in excess of those needed to provide the HHW program on behalf of the City will be returned to the City. Conversely, if HHW program costs are higher than Milpitas's annual AB939 fees, the City will be invoiced by the HHW program to cover the delta. Each year, the program aims to serve approximately 4% of households in each jurisdiction (estimated at 1,031 loads); the projected participation for next fiscal year is up to 1,429 loads.

Historically, the City of Milpitas has received refund checks from HWW fees each year because the costs of the HHW program are less than the total HHW fees collected on waste from Milpitas. However, beginning last fiscal year, the HHW program costs exceeded the HHW fees and the City was invoiced for the difference (approximately $28,000). Several factors contributed to the higher HHW costs and lower AB939 fees:

- **Decreased AB939 fees received**: As residents are recycling more, and food waste is being diverted from the landfills due to legislation such as Senate Bill 1383, cities are seeing decreased disposal tonnages which equates to decreased AB939 fees received.
- **Decreased Used Oil Grant Amounts:** The County applies for, and administers, the Used Oil Grant on behalf of the majority of cities in Santa Clara County, including Milpitas. These grant funds are used to offset the cost of the HHW program; however, the grant amounts have been decreasing. CalRecycle cites the rise of electric vehicles and less motor oil and fewer filters used as the reason for this decrease.
- **Higher participation rates**: Except for Fiscal Year 2020, when the HHW program was shut down for most of the year due to COVID-19, HHW participation rates have been steadily increasing. Increased participation leads to higher program costs.
- **Higher labor and staff costs:** The County's staffing and labor costs continue to increase.
- **Higher contract disposal fees:** The County's disposal contract costs have increased in the past few years.
- **Increased costs for the San José Las Plumas facility:** The lease amount, maintenance, and operations costs of the San José Las Plumas Facility have increased significantly in the upcoming HHW Agreement.

These increased costs are affecting all participating jurisdictions. In the most recent fiscal year, every participating jurisdiction, with the exception of Gilroy, was invoiced for additional HHW program expenditures. In the upcoming fiscal year, Milpitas is projected to owe the County up to $79,341. The final amount will depend on actual participation and will be calculated by the County and reconciled at the end of the fiscal year. Every other participating jurisdiction is also projected to owe a balance to the HHW program. This additional amount may be funded from savings in the Public Works Solid Waste Program Operating Budget.

Staff will work with Milpitas Sanitation Inc. during the upcoming solid waste rate setting review to evaluate increasing the Solid Waste Compliance fee to support ongoing additional costs of the HHW program. Continued participation in the Countywide HHW program is essential in keeping HHW out of landfills and preventing illegally dumping in the City.

POLICY ALTERNATIVE(S):

Alternative 1: Do not participate in either agreement and create a standalone HHW program for the City of Milpitas to comply with AB939.

Pros: Creating an individual HHW program allows for more customization and flexibility.

Cons: Failure to participate in the Countywide AB939 implementation fee would mean the City would lose the revenue collected from the AB939 Fee, estimated at $120,000 to $150,000 annually. Additionally, neither the City of Milpitas nor Milpitas Sanitation Inc. has the capacity, space, or expert knowledge required to operate a specialized collection program for flammable, corrosive, and/or toxic chemicals.

Reason for Not Recommending: The City of Milpitas does not have the capacity or specialized knowledge required to create and operate its own AB939-compliant HHW program. By participating in a coordinated effort with other participating cities, Milpitas is also able to take advantage of economies of scale and consistent services with surrounding cities. It is in the best interest of the City to continue to participate in the Countywide AB939 program and receive the associated fee revenue to fund City-specific solid waste and recycling programs.

FISCAL IMPACT:
The City receives approximately $120,000 to $150,000 annually from the AB939 implementation fee. This is recognized as a source of revenue for the City Solid Waste Reduction and Services Fund.

The projected fund balance of the Solid Waste Reduction and Services Fund at the end of FY 23-24 is $1,483,670.

The estimated additional cost to the City for the Countywide HHW Program costs is estimated at up to $79,341. Staff anticipates that additional cost may be funded from savings in the Public Works Solid Waste Program Operating Budget or, if needed, from the fund balance in the Solid Waste Reduction and Services Fund.

CALIFORNIA ENVIRONMENTAL QUALITY ACT (CEQA):
The item is exempt from CEQA as there will be no physical change to the environment. o The action is a fiscal activity of the City government or an action to create a City government funding mechanism that does not involve any commitment to any specific project which may result in a potentially significant physical impact on the environment and is not a project pursuant to Cal. Code of Regs., tit. 14, § 15378.

RECOMMENDATION:
Approve and Authorize the City Manager to execute two Agreements and related amendments with the County of Santa Clara for (1) Collection of AB939 Implementation Fees and for (2) Administration of the Countywide Household Hazardous Waste (HHW) Collection Program covering July 1, 2024 – June 30, 2027.

ATTACHMENT(S):
(a) Agreement with County of Santa Clara for AB939 Implementation Fees for Fiscal Years 2025-2027
(b) Agreement with County of Santa Clara for Household Hazardous Waste Collection Program for Fiscal Years 2025-2027

AGREEMENT FOR COUNTYWIDE
AB939 IMPLEMENTATION FEE

This Agreement is made by and among the Cities and Towns of Campbell, Cupertino, Gilroy, Los Altos, Los Altos Hills, Los Gatos, Milpitas, Morgan Hill, Monte Sereno, Mountain View, Palo Alto, San José, Santa Clara, Saratoga, and Sunnyvale (CITIES) and the County of Santa Clara (COUNTY) on the _____ day of _____ 2024. The term CITIES may refer to CITIES collectively or individually.

RECITALS

WHEREAS, pursuant to Public Resources Code Section 41901, a city, county, or city and county may impose fees in amounts sufficient to pay the costs of preparing, adopting, and implementing a countywide integrated waste management plan;

WHEREAS, State law, Public Resource Code Section 41750, requires that the countywide integrated waste management plans contain a household hazardous waste ("HHW") element for each city within the county as well as for the unincorporated area of the county;

WHEREAS, the Board of Supervisors of the County of Santa Clara ("Board") has imposed a Countywide AB939 Implementation Fee ("Fee") since July 1, 1992 to pay for the costs of preparing, adopting, and implementing integrated waste management plans and programs, including HHW program elements;

WHEREAS, the Board has approved reimposing the Fee for Fiscal Years 2025, 2026, and 2027 (July 1, 2024 through June 30, 2027) at $4.10 per ton of waste landfilled or incinerated in the County; received at any nondisposal or collection facility located within the County and subsequently transported for disposal or incineration outside of the County; collected from any location within the County by a solid waste hauler operating pursuant to a franchise, contract, license, or permit issued by any local jurisdiction and subsequently transported for disposal or incineration outside of the County; and removed from any location in the County by any person or business for disposal or incineration outside the County;

WHEREAS, HHW programs provide household hazardous waste management services to residents of Santa Clara County and are necessary to meet HHW planning and management requirements under State law;

WHEREAS, jurisdictions in Santa Clara County desire to provide safe, convenient, and economical means for residents to properly dispose of household hazardous wastes in an environmentally safe manner in order to avoid unauthorized or improper disposal in the garbage, sanitary sewer, storm drain system, or on the ground or in any other manner which creates a health or environmental hazard. These wastes include, but are not limited to, common household products such as household cleaning products, spot remover, furniture polish, solvents, oven cleaner, pesticides, oil based paints, motor oil, antifreeze, fluorescent lamps, and batteries; and

WHEREAS, the County will collect the Fee on behalf of the fifteen cities and for the unincorporated area of the County and will apportion the Fee according to the terms of this Agreement.

NOW THEREFORE, CITIES and COUNTY AGREE AS FOLLOWS:

1. PURPOSE

The purpose of this Agreement is to state the terms and conditions under which the COUNTY will collect and distribute the Fee of $4.10 per ton of waste to be disposed in Fiscal Years 2025, 2026 and 2027. The Fee is divided into two parts: 1) a Program Fee of $1.50 per ton to assist in funding the costs of preparing, adopting, and implementing the integrated waste management plan in the fifteen cities and the unincorporated area of the County; and 2) a Household Hazardous Waste Fee of $2.60 per ton to provide funding to implement the Countywide HHW Program. The Program Fee will be allocated among the CITIES and COUNTY as described in Exhibit B, attached hereto and incorporated herein. The HHW Fee will be allocated to the COUNTY, CITIES, and Countywide HHW Program as described in Exhibit C, attached hereto and incorporated herein. The Fee shall be imposed on each ton of waste landfilled or incinerated within the County; received at any non-disposal or collection facility located within the County and subsequently transported for disposal or incineration outside of the County; collected from any location within the County by a solid waste hauler operating pursuant to a franchise, contract, license, or permit issued by any local jurisdiction and subsequently transported for disposal or incineration outside of the County; or removed from any location in the County by any person or business for disposal or incineration outside the County. Non-Disposal Facilities are defined as those facilities included in the County of Santa Clara Non-Disposal Facility Element (and subsequent amendments to that Element) and are listed in Exhibit A, attached hereto and incorporated herein.

2. SERVICES PROVIDED BY COUNTY

COUNTY will collect and distribute the Fee. COUNTY will collect the Fee from landfills and non-disposal facilities listed in Exhibit A, and any landfill or non-disposal facility subsequently permitted, on a quarterly basis using data from tonnage reports filed by landfill and non-disposal facility operators with the County Recycling and Waste Reduction Division. COUNTY shall require each landfill and non-disposal facility to submit required payment, documentation of tonnages disposed, and state-mandated Disposal Reporting System Reports on a quarterly basis, within 45 days of the end of each calendar quarter. Late submissions and/or payments shall be subject to a late filing penalty and delinquent penalties. COUNTY will research Santa Clara County tonnage reported to COUNTY by landfills outside the COUNTY in significant amounts to determine the identity of the hauler. That hauler will subsequently be billed in the same fashion subject to the same penalties as mentioned above. Collected funds and any late filing payments and delinquency penalties shall be distributed to CITIES and Countywide HHW Program based on the formula set forth in Exhibits B and C. COUNTY shall not be obligated to distribute funds that COUNTY has been unable to collect from landfill or non-disposal facility operators.

/ /

3. ROLE OF CITIES

CITIES shall review the Disposal Reporting System Reports as prepared and submitted by the COUNTY and within 30 days of receipt shall report to COUNTY, with appropriate documentation, errors in waste allocations among jurisdictions.

4. COLLECTION AND USE OF FEE

Each ton of waste will be subject to the fee if it is landfilled or incinerated in the County; received at any non-disposal facility or collection facility in the County and subsequently transported for disposal or incineration outside the County; collected from any location within the County by a solid waste hauler operating under franchise, contract, license, or permit issued by a local jurisdiction and subsequently transported for disposal or incineration outside the County; or removed from any location in the County by any person or business for disposal or incineration outside the County. Best efforts will be made to prevent tonnage from being assessed a double fee (for instance, once at a non-disposal facility and again at a landfill within Santa Clara County). The Program Fee funding share paid to CITIES shall be used to assist in funding the CITIES' costs of preparing, adopting, and implementing the integrated waste management plan of each of the CITIES and the unincorporated area of the COUNTY. The HHW Fee portion shall be applied to fund the costs of CITIES' share of Countywide Household Hazardous Waste services; any HHW fees directly disbursed to CITIES as provided in this Agreement shall be used to fund the costs of preparing, adopting, and implementing the jurisdiction's HHW element of the Countywide integrated waste management plan, including providing HHW services to residents.

5. INSURANCE

Each party shall maintain its own insurance coverage, through third party insurance, self-insurance or a combination thereof, against any claim, expense, cost, damage or liability arising out of the performance of its responsibilities pursuant to this Agreement. CITIES agree to provide evidence of such insurance to COUNTY via Certificate of Insurance or other documentation acceptable to the COUNTY upon request.

6. INDEMNIFICATION

In lieu of and not withstanding the pro rata risk allocation which might otherwise be imposed between CITIES and COUNTY pursuant to Government Code Section 895.6, the parties agree that all losses or liabilities incurred by a party shall not be shared pro rata but instead the parties agree that each of the parties hereto shall fully indemnify and hold each of the other parties harmless from any claim, expense or cost, damage or liability arising out of, or in connection with, performance of its responsibilities pursuant to this Agreement and as described in Exhibit D.

Additionally, CITIES shall indemnify, hold harmless, and defend COUNTY, its officers, agents, and employees with respect to any loss, damage, liability, cost or expenses, including attorney fees and court costs, arising from any misuse of the Fee distributed to CITIES. COUNTY shall indemnify, hold harmless, and defend CITIES, its officers, agents, and employees with respect to any loss, damage, liability, cost or expenses, including attorney fees and court costs, brought by third parties based on COUNTY's sole negligence in the collection or distribution of said Fees.

7. DISTRIBUTION OF FEE

COUNTY shall distribute the AB939 Program Fee to CITIES and the HHW Program Fee to the Countywide HHW Program pursuant to the formulas described in Exhibits B and C within 45 days of receipt of landfill and non-disposal facility payments and disposal documentation required for calculation of Fee distribution amounts. Distributions shall begin December 15, 2024, and continue quarterly through October 15, 2027.

8. PARTICIPATION IN THE COUNTYWIDE HHW PROGRAM

CITIES, at their option, may individually participate in the Countywide HHW Program by entering into the AGREEMENT FOR COUNTYWIDE HOUSEHOLD HAZARDOUS WASTE COLLECTION PROGRAM.

9. LATE PAYMENTS

If Fee payments and disposal documentation are not received from landfill or non-disposal facility operators prior to scheduled distribution of payments to CITIES and the Countywide HHW Program, payment distribution shall be calculated on a pro rata share of monies received. Upon collection, late payments and accrued delinquent penalties, if any, shall be distributed among CITIES and the Countywide HHW Program according to the formula in Exhibits B and C.

10. ACCOUNTING

COUNTY shall maintain records of all transactions related to collection, use and distribution of the Fee for at least five (5) years after the termination date of this Agreement, unless otherwise required by law to retain such records for a longer period. Such records will be available for inspection upon written request by CITIES, and will include but not be limited to tonnage reports submitted by landfills and non-disposal facilities, waste stream documentation provided by cities, payments made by the landfills and non-disposal facilities to the COUNTY and by the COUNTY to CITIES, and expenditures for programmatic and overhead costs.

11. REQUEST FOR REVIEW

In the event CITIES have a dispute regarding the calculation of its share of the Fee or the distribution or use of the Fee, CITIES may request in writing a review by COUNTY within 10

days of receipt of their Fee allocation. The review shall be performed within 30 days of request and results shall be reported to CITIES in writing.

/ /

/ /

12. EFFECTIVE DATE OF AGREEMENT

This agreement is effective upon approval by all fifteen CITIES and the COUNTY.

13. AMENDMENT

This Agreement may be amended only by an instrument signed by all fifteen CITIES and the COUNTY.

14. INDEPENDENT CONTRACTOR

Each party shall perform responsibilities and activities described herein as an independent contractor and not as an officer, agent, servant or employee of any of the parties hereto. Each party shall be solely responsible for the acts and omissions of its officers, agents, employees, contractors and subcontractors, if any. Nothing herein shall be considered as creating a partnership or joint venture between the parties.

15. TERM OF AGREEMENT

The term of this Agreement shall be from July 1, 2024 to June 30, 2027, or until all funds from the last quarter's Fee payments have been distributed, whichever is later. COUNTY shall bill the operators of the landfills and non-disposal facilities listed in Exhibit A for the Fee commencing with the Quarter ending September 30, 2024. Said landfills and non-disposal facilities will be billed for the Fee through June 30, 2027.

16. NOTICES

All notices required by this Agreement will be deemed given when in writing and delivered personally or deposited in the United States mail, postage prepaid, return receipt requested, addressed to the other party at the address set forth below or at such address as the party may designate in writing in accordance with this section.

City of _____
Contact: _____
Title: _____
Address: _____

County of Santa Clara

Contact: Recycling and Waste Reduction Program Manager
Program: Integrated Waste Management Services
Address: 1553 Berger Drive, Building 1
San José, CA 95112

/ /

/ /

17. CONTROLLING LAW

This Agreement shall be governed and construed in accordance with the laws of the State of California.

18. ENTIRE AGREEMENT

This document embodies the entire Agreement between the parties with respect to the subject matter hereof. No modification of this Agreement shall be effective unless and until modification is evidenced by writing signed by all parties or their assigned designees.

19. COUNTERPARTS

This Agreement may be executed in one or more counterparts, each of which shall be deemed to be an original, but all of which together shall constitute one and the same instrument.

20. CONTRACT EXECUTION

Unless otherwise prohibited by law or County policy, the parties agree that an electronic copy of a signed contract, or an electronically signed contract, has the same force and legal effect as a contract executed with an original ink signature. The term "electronic copy of a signed contract" refers to a transmission by facsimile, electronic mail, or other electronic means of a copy of an original signed contract in a portable document format. The term "electronically signed contract" means a contract that is executed by applying an electronic signature using technology approved by the County.

/ /

/ /

/ /

/ /

/ /

/ /

/ /

/ /

/ /

/ /

/ /

IN WITNESS WHEREOF, the parties have executed this AGENCY AGREEMENT FOR COUNTYWIDE AB939 IMPLEMENTATION FEE on the dates as stated below:

Date: _____

COUNTY OF SANTA CLARA

_____
JAMES R. WILLIAMS
County Executive

Date: _____

CITY"

_____
CITY/TOWN OF _____
Title _____
A municipal corporation

APPROVED AS TO FORM AND LEGALITY:

_____
Willie Nguyen
Deputy County Counsel

EXHIBIT A

LANDFILLS LOCATED IN SANTA CLARA COUNTY

Guadalupe Rubbish Disposal Site
Kirby Canyon Sanitary Landfill
Newby Island Sanitary Landfill
Pacheco Pass Sanitary Landfill
Palo Alto Refuse Disposal Area
Zanker Materials Processing Facility
Zanker Road Landfill

NON-DISPOSAL FACILTIES AND TRANSFER STATIONS LOCATED IN SANTA CLARA COUNTY

Butterick Enterprises Recyclery
California Waste Solutions Recycling & Transfer Station
City of Palo Alto Green Composting Facility
ComCare Farms Composting Facility
Environmental Management Systems Facility
Green Waste Recovery Facility
Mission Trail Waste Systems, Inc.
Newby Island Compost Facility
Pacheco Pass Landfill Composting Facility
Pacific Coast Recycling, Inc.
Premier Recycling Facility
The Recyclery at Newby Island
San Martin Transfer Station
Sunnyvale Materials Recovery and Transfer Station (SMaRT Station)
Z-Best Composting Facility
Zanker Materials Processing Facility

EXHIBIT B

FORMULA FOR DISTRIBUTION OF AB939 PROGRAM FEE

Each of the CITIES, and the COUNTY for its unincorporated area, will receive $1.50 per ton of solid waste disposed of in landfills or taken to non-disposal facilities located in Santa Clara County that originates from that jurisdiction, as documented in quarterly reports submitted by the County to the State Disposal Reporting System.

Fees collected from undocumented disposed tonnage, or tonnage originating outside of Santa Clara County, will be distributed according to each jurisdiction's percent of countywide population, according to the latest available population report issued by the California Department of Finance.

EXHIBIT C

COUNTYWIDE HOUSEHOLD HAZARDOUS WASTE PROGRAM FEE (HHW Fee)

1. PROGRAM FUNDING SOURCE

HHW Program services are mandated by State law, Public Resources Code Section 41500 et seq. Public Resources Code Section 41901 authorizes imposition of a fee to support planning and implementation of integrated waste management programs, including their HHW elements. The HHW Fee, of $2.60 per ton, collected as part of the AB939 Implementation Fee, will be the primary source of funding for Countywide Household Hazardous Waste Collection Program (CoHHW Program) services.

Funds derived from the HHW Fee will be allocated among five types of CoHHW Program service costs as follows:

A. Fixed Program Costs will be apportioned based on the number of households in each participating jurisdiction. The number of households will be determined at the beginning of each Fiscal Year by statistics compiled by the California Department of Finance, Demographic Research Unit from their most recent Report, "Population Estimates for California Cities and Counties."

B. San José Facility Use Surcharge will be apportioned based on CITIES' anticipated participation at the County Household Hazardous Waste Collection Facility located at 1608 Las Plumas Avenue, San José.

C. Variable Cost Per Car is the cost associated with labor, waste disposal, transportation, and other services provided to residents at the County HHW Collection Facilities and at temporary HHW collection events. The Variable Cost Per Car is based on the estimated cost of providing a base level service to 4% of households in all participating jurisdictions. The number of households will be determined at the beginning of each Fiscal Year by statistics compiled by the California Department of Finance, Demographic Research Unit from their most recent Report, "Population Estimates for California Cities and Counties."

D. Available Discretionary Funding is allocated based on tonnage generated per participating jurisdiction, and after allocation of Fixed Program Costs, San José Facility Use Surcharge, and Variable Cost Per Car allocation.

E. Abandoned Waste Disposal Costs will fund disposal of HHW illegally abandoned at Nonprofit Charitable Reuser organizations as defined in Public Resources Code Section 41904.

/ /

/ /

2. FIXED PROGRAM COST

Funds shall be allocated on a per household basis for Fixed Program Costs at the conclusion of each Fiscal Year. This portion of the funds shall be distributed directly to the Countywide HHW Program to pay for HHW Program costs. Fixed Program Costs funding shall be calculated shall not exceed $5.07 per household in Fiscal Years 2025, 2026, and 2027. Fixed Program Costs may include, but are not limited to, eleven (11) CoHHW Program staff members, facility leasing costs, vehicle lease costs, office rent, office supplies, county administrative overhead, county legal counsel, training costs, equipment and facility maintenance, and union negotiated salary and benefit changes.

3. ABANDONED WASTE DISPOSAL COST

The Abandoned Waste Disposal Cost will fund disposal of HHW illegally abandoned at Nonprofit Charitable Reuser organizations. The Abandoned Waste Disposal Cost is based on the cost to the County to dispose of abandoned waste allocated among participating jurisdictions based on their proportional share of the County population and shall not exceed $0.05 per household. Projected Abandoned Waste Disposal Costs to the CITY based on a charge of $.05 per household are set forth in Attachment A, attached hereto and incorporated herein.
Any existing unexpended non-profit abandoned waste fund balance may be allocated toward funding of disposal of HHW illegally abandoned at nonprofit charitable reuser organizations as defined in Public Resources Code Section 41904.

For the purposes of this agreement, a nonprofit charitable reuse organization has the definition provided in Public Resources Code Section 41904 as follows: "Nonprofit charitable reuser" means a charitable organization, as defined in Section 501(c)(3) of the federal Internal Revenue Code, or a distinct operating unit or division of the charitable organization, that reuses and recycles donated goods or materials and receives more than 50 percent of its revenues from the handling and sale of those donated goods or materials.

4. SAN JOSÉ FACILITY USE SURCHARGE

The total San José Facility Use Surcharge for CITY will be based on CITY residents' proportional participation at the County Household Hazardous Waste Collection Facility located at 1608 Las Plumas Avenue, San José. The San José Facility Use Surcharge will vary depending on facility usage but will not exceed $8.09 per car for Fiscal Years 2025, 2026, and 2027. The total San José Facility Use Surcharge for CITY will be based on CITY's participation at the County Household Hazardous Waste Collection Facility located at 1608 Las Plumas Avenue, San José.

5. VARIABLE COST PER CAR

The Variable Cost Per Car is the cost associated with actual labor, waste disposal, transportation and other services provided to the residents at the County HHW Collection

Facilities and Temporary Events. This portion of the funds shall be distributed directly to the Countywide HHW Program. The Variable Cost Per Car is estimated to be $66.02 per car for Fiscal Years 2025, 2026, and 2027. The estimated cost per car will be adjusted annually to reflect actual service costs. After fixed costs and San José Facility Use Surcharge are allocated on a per household basis, the variable cost per car will be used to calculate the costs to service 4% of households across all participating jurisdictions. If the level of 4% of households is not reached, the Countywide HHW Program will use the remaining balance of funds, in cooperation with the CITIES, to increase public outreach and/or provide additional services in that jurisdiction where the level of 4% is not reached the following year.

6. AVAILABLE DISCRETIONARY FUNDING

The Available Discretionary Funding portion will be allocated based on the tons of waste generated within each jurisdiction and after allocation of Fixed Program Cost, San José Facility Use Surcharge, and Variable Per Car Cost. Available Discretionary Funds must be used for HHW purposes. Options for how to spend these funds include, but are not limited to, increasing the number of residents served in the jurisdiction by the Countywide HHW Program, universal waste collection, emergency HHW services, funding HHW public education, the support of capital infrastructure projects to accommodate HHW drop-off and collection events, or providing special programs such as retail collection of certain waste and/or door-to-door collection of HHW for the elderly and/or persons with disabilities and neighborhood clean-up events. CITIES authorize the COUNTY to determine appropriate uses of available discretionary funding and to use CITIES' Available Discretionary Funding portion of the AB939 HHW Fee to provide for additional HHW services requested by the CITIES.

7. PROGRAM FUNDING PASS-THROUGH

Annual funding calculations include HHW Fees collected on behalf of all jurisdictions in the County. CITIES, at their option, may participate in the Countywide HHW Program by entering into the AGREEMENT FOR COUNTYWIDE HOUSEHOLD HAZARDOUS WASTE COLLECTION PROGRAM. If CITIES elect to participate in the Countywide HHW Program, their pro-rata share of the HHW Fee shall be retained by the County to utilize for HHW Program costs, as provided in this Agreement and the Agreement for Countywide Household Hazardous Waste Collection Program. The COUNTY will distribute to CITIES not participating in the Countywide Household Hazardous Waste Collection Program their pro-rata share of funding received by the COUNTY from the HHW Fee, except that the COUNTY may retain and expend that portion of the non-participating CITIES' fee attributable to Abandoned Waste Disposal Costs.

If CITIES not participating in the AGREEMENT FOR COUNTYWIDE HOUSEHOLD HAZARDOUS WASTE COLLECTION PROGRAM desire to allow residents to participate in HHW Program services on an emergency basis, then services to these residents will be provided on a cost recovery basis. A charge equal to the established rates charged by the Countywide HHW Program to Conditionally Exempt Small Quantity Generators will be billed to the CITIES. A CITIES' representative must call the Countywide HHW Program appointment line to schedule

an appointment for the resident. Liability shall be apportioned as provided in Exhibit D to this Agreement.

EXHIBIT D

SECTION 28 OF AGENCY AGREEMENT FOR COUNTYWIDE HOUSEHOLD HAZARDOUS WASTE COLLECTION PROGRAM

HOLD HARMLESS AND INDEMNIFICATION

In lieu of and not withstanding the pro rata risk allocation which might otherwise be imposed between CITY and COUNTY pursuant to Government Code Section 895.6, the parties agree that all losses or liabilities incurred by a party shall not be shared pro rata but instead COUNTY and CITY agree that pursuant to Government Code Section 895.4, each of the parties hereto shall fully indemnify and hold each of the other parties, their officers, board members, employees and agents, harmless from any claim, expense or cost, damage or liability imposed for injury (as defined by Government Code Section 810.8) occurring by reason of the negligent acts or omissions or willful misconduct of the indemnifying party, its officers, employees or agents, under or in connection with or arising out of any work, authority or jurisdiction delegated to such party under this Agreement. No party, nor any officer, board member, employee or agent thereof shall be responsible for any damage or liability occurring by reason of the negligent acts or omissions or willful misconduct of the other parties hereto, their officers, board members, employees or agents, under or in connection with or arising out of any work authority or jurisdiction delegated to such other parties under this Agreement.

Additionally, CITY shall indemnify COUNTY for CITY's apportioned share of any liability incurred and attributed to the Countywide HHW Program for the transportation, treatment, or disposal of the household hazardous waste, once the waste has been accepted by a licensed hazardous waste hauler. Apportionment for disposal liability shall be determined by each participating jurisdiction's pro rata proportion of household participation in the Program. Apportionment for transportation and treatment liability shall be determined by each participating jurisdiction's pro rata household participation at the event where the waste was generated. COUNTY will use reasonable efforts to obtain recovery from all available resources, including insurance, of any liable hauler or liable disposal facility operator. No liability shall be apportioned to CITY for transportation, treatment or disposal in any case where COUNTY has contracted for such services and has failed to require the contractor to maintain the insurance requirements set forth in Section 23 of the AGREEMENT FOR COUNTYWIDE HOUSEHOLD HAZARDOUS WASTE COLLECTION PROGRAM.

CITY shall further indemnify COUNTY for CITY's apportioned share of liability incurred and attributed to the Countywide HHW Program for the transportation, treatment or disposal of household hazardous waste at corporate sponsored events where non-county resident employees of the corporate sponsor are authorized to participate in the event. Liability for the nonresident portion of the disposal of waste shall be shared by the cities and the county as described above. The nonresident portion shall be determined by calculating the percentage of nonresidents participating in the event. This percentage will then be subtracted from the total

liability for the household hazardous waste prior to assessing CITY's apportioned share of any liability for the household hazardous waste.

COUNTY shall require Conditionally Exempt Small Quantity Generators ("CESQG") and Nonprofit Charitable Reusers to indemnify COUNTY for, at minimum, their apportioned share of any liability incurred and attributed to the Countywide HHW Program for the transportation, treatment, or disposal of their hazardous waste, once the waste has been accepted by a licensed hazardous waste hauler. The CESQG and Nonprofit Charitable Reuser portion of the waste shall be determined by calculating the percentage, by weight, of the total household hazardous waste accepted by the CoHHW Program. This percentage will be used to calculate the portion of liability attributed to CESQGs and Nonprofit Charitable Reusers and will be subtracted from the total liability prior to assessing CITY's apportioned share of any liability for household hazardous waste.

AGREEMENT FOR COUNTYWIDE HOUSEHOLD HAZARDOUS WASTE COLLECTION PROGRAM

This Agreement for Countywide Household Hazardous Waste Collection Program ("AGREEMENT") is made by and between the _____("CITY") and the County of Santa Clara ("COUNTY") on the _____ day of _____ 2024.

RECITALS

WHEREAS, the Board of Supervisors of the County of Santa Clara ("Board of Supervisors") has approved a Countywide Household Hazardous Waste Collection Program whereby residents of the unincorporated areas of the Santa Clara County and cities and towns within Santa Clara County participating in the Countywide program will have an opportunity to safely dispose of household hazardous wastes (HHW), regardless of the specific location at which the collection has been scheduled; and

WHEREAS, CITY desires to provide residents with convenient opportunities to safely dispose of their HHW in order to encourage the proper disposal of toxic products, and avoid unauthorized or improper disposal in the garbage, sanitary sewer, storm drain system, or on the ground, in a manner which creates a health and/or environmental hazard; and

WHEREAS, CITY desires to provide a safe, convenient, and economical means for residents to dispose of HHW. These wastes include, but are not limited to, common household products such as household cleaning products, furniture polish, solvents, oven cleaner, pesticides, oil-based paints, motor oil, antifreeze, car batteries, mercury thermostats, fluorescent lamps, household batteries, and electronic waste; and

WHEREAS, CITY desires to schedule Household Hazardous Waste Collection Events (Events) for residents for FY 2025 through FY 2027 (July 1, 2024 – June 30, 2027); and

WHEREAS, CITY desires to provide household hazardous waste collection services to a minimum of 4% of the households per fiscal year in its jurisdiction; and

WHEREAS, CITY desires to participate in the Countywide Household Hazardous Waste Collection Program to meet these objectives; and

WHEREAS, pursuant to Public Resources Code Section 41901, the Board of Supervisors has approved the collection of a $4.10 per ton Countywide AB939 Implementation fee, including a $2.60 per ton Household Hazardous Waste Fee (AB939 HHW Fee), for FY 2025 through FY 2027 (July 1, 2024 – June 30, 2027) on all wastes landfilled or incinerated within Santa Clara County, received at any non-disposal or collection facility located within Santa Clara County and subsequently transported for disposal or incineration outside of Santa Clara County, collected from any location within the County by a solid waste hauler operating pursuant to a franchise, contract, license, or permit issued by any local jurisdiction and subsequently

transported for disposal or incineration outside of Santa Clara County, or removed from any location in Santa Clara County by any person or business for disposal or incineration outside the county; and

WHEREAS, the AB939 HHW Fee is allocated to the Countywide Household Hazardous Waste Program and participating jurisdictions to fund HHW program costs in accordance with the terms of the Countywide AB939 Implementation Fee Agreement; and

WHEREAS, CITY desires for COUNTY to utilize CITY's share of the AB939 HHW Fee to provide HHW services for CITY residents.

NOW THEREFORE, CITY and COUNTY AGREE AS FOLLOWS:

1. PURPOSE

The purpose of this AGREEMENT is to state the terms and conditions under which CITY will participate in the Countywide Household Hazardous Waste Collection Program (CoHHW Program) available to its residents. Participating jurisdictions are those jurisdictions that enter into this AGREEMENT with the County.

2. PROGRAM FUNDING SOURCE

HHW Program services are mandated by State law, Public Resources Code Section 41500 *et seq*. State law authorizes cities and counties to impose fees in amounts sufficient to support planning and implementation of integrated waste management programs, including HHW elements. The AB939 HHW Fee, of $2.60 per ton, imposed by COUNTY as part of the AB939 Implementation Fee and collected and distributed in accordance with the Agreement for Countywide AB939 Implementation Fee will be the primary source of funding for CoHHW Program services. CITY agrees that COUNTY may utilize CITY's share of the AB939 HHW fee to provide HHW Program services in accordance with the terms and conditions of this AGREEMENT.

Funds derived from the AB939 HHW Fee will be allocated among five types of CoHHW Program service costs as follows:

A. Fixed Program Costs will be apportioned based on the number of households in each participating jurisdiction. The number of households will be determined at the beginning of each Fiscal Year by statistics compiled by the California Department of Finance, Demographic Research Unit from their most recent Report, "Population Estimates for California Cities and Counties."

B. San José Facility Use Surcharge will be apportioned based on CITY residents' participation at the County Household Hazardous Waste Collection Facility located at 1608 Las Plumas Avenue, San José, CA 95133.

C. Variable Cost Per Car is the cost associated with labor, waste disposal, transportation, and other services provided to residents at the County HHW Collection Facilities and at temporary HHW collection events. The Variable Cost Per Car is based on the estimated cost of providing a base level service to 4% of households in all participating jurisdictions. The number of households will be determined at the beginning of each Fiscal Year by statistics compiled by the California Department of Finance, Demographic Research Unit from their most recent Report, "Population Estimates for California Cities and Counties."

D. Available Discretionary Funding is allocated based on tonnage generated per participating jurisdiction, and after allocation of Fixed Program Costs, San José Facility Use Surcharge, and Variable Cost Per Car allocation.

E. Abandoned Waste Disposal Costs will fund disposal of HHW illegally abandoned at Nonprofit Charitable Reuser organizations as defined in Section 41904 of California Public Resources Code.

The projected AB939 HHW Fee Allocation by jurisdiction is set out in Attachment A, attached hereto and incorporated herein.

3. FIXED PROGRAM COST

Estimated HHW Fixed Program Costs are projected in Attachment B, attached hereto and incorporated herein. Fixed Program Costs are allocated to CITY at the conclusion of each fiscal year based on CITY's proportional share of the County population and will not exceed $5.07 per household for Fiscal Years 2025, 2026, and 2027. Fixed Program Costs may include, but are not limited to, up to eleven (11) County HHW Program staff members, facility lease costs, vehicle lease costs, office rent, office supplies, county administrative overhead, county legal counsel, training costs, equipment and facility maintenance and union negotiated salary and benefit changes.

4. ABANDONED WASTE DISPOSAL COST

The Abandoned Waste Disposal Cost will fund disposal of HHW illegally abandoned at Nonprofit Charitable Reuser organizations. The Abandoned Waste Disposal Cost is based on the cost to the County to dispose of abandoned waste allocated among participating jurisdictions based on their proportional share of the County population and shall not exceed $0.05 per household. Projected Abandoned Waste Disposal Costs to the CITY based on a charge of $0.05 per household are set forth in Attachment A, attached hereto and incorporated herein.

For the purposes of this Agreement, "Nonprofit Charitable Reuser Organization" is defined in accordance with Section 41904 of California Public Resources Code as follows: a charitable organization, as defined in Section 501(c)(3) of the federal Internal Revenue Code, or a distinct operating unit or division of the charitable organization, that reuses and recycles donated goods or materials and receives more than 50 percent of its revenues from the handling and sale of those donated goods or materials.

5. SAN JOSÉ FACILITY USE SURCHARGE

The total San José Facility Use Surcharge for CITY will be based on CITY residents' proportional participation at the County Household Hazardous Waste Collection Facility located at 1608 Las Plumas Avenue, San José. Estimated San José Facility Use Surcharges are projected in Attachment A, attached hereto and incorporated herein. The San José Facility Use Surcharge will vary depending on facility usage but will not exceed $8.09 per car for Fiscal Years 2025, 2026, and 2027.

6. VARIABLE COST PER CAR

The Variable Cost Per Car is the cost associated with actual labor, waste disposal, transportation and other services provided to the residents at the County Household Hazardous Waste Collection Facilities (CoHHWCF) and at Temporary Events. The Variable Cost Per Car is estimated to be approximately $66.02 per participating resident car for Fiscal Years 2025, 2026 and 2027. The estimated cost per car will be adjusted to reflect actual service costs. After Fixed Program Costs and San José Facility Use Surcharge are allocated on a per household basis, the Variable Cost Per Car will be used to calculate the costs to service 4% of households across all participating jurisdictions. If the level of 4% of households is not reached in the CITY, the CoHHW Program may use the remaining balance of funds, in cooperation with the CITY, to increase public outreach and/or provide additional services in that jurisdiction the following year.

7. AVAILABLE DISCRETIONARY FUNDING

The Available Discretionary Funding portion of the AB939 HHW Fee will be allocated based on the tons of waste generated within each jurisdiction, and after allocation of Fixed Program Costs, San José Facility Use Surcharge, and Variable Cost Per Car allocation. Available Discretionary Funds must be used for HHW purposes. Options for how to spend these funds include, but are not limited to, increasing the number of residents served in that jurisdiction by the CoHHW Program, subsidizing curbside used motor oil collection, electronic waste (e-waste) collection, universal waste collection, emergency HHW services, funding HHW public education, the support of capital infrastructure projects to accommodate HHW drop-off and collection events, or providing special programs such as retail collection of certain waste and/or door-to-door collection of HHW for the elderly and/or persons with disabilities and neighborhood clean-up events. COUNTY has discretion to determine appropriate uses of Available Discretionary Funding in accordance with the terms and conditions in this Agreement, and to apply the funding toward those uses.

8. ADMINISTRATION AND PAYMENT OF THE AB939 HHW FEE

The County of Santa Clara Recycling and Waste Reduction Division will administer the AB939 HHW Fee, as part of the existing online disposal reporting and payment system. Administration and payment will be made in accordance with the Agreement for Countywide AB939 Implementation Agreement. Notwithstanding the foregoing, the COUNTY shall maintain records of the amount, use, and distribution of Fixed Program Cost expenditures for at least five (5) years after the termination date of this Agreement, unless otherwise required by law

to retain such records for a longer period. CITY may request in writing a review by COUNTY of the Fixed Program Cost records. The review shall be performed within 30 days of request and results shall be reported to participating cities in writing.

9. PROGRAM PUBLICITY

The CoHHW Program shall produce and make available to the public an HHW brochure for distribution. The brochure will be made available at various events, including but not limited to, environmental events and community fairs. The brochure may also be distributed, upon request, to cities within Santa Clara County and to Santa Clara County residents and businesses. The CITY shall be responsible for developing and coordinating citywide awareness of the HHW Program. The CoHHW Program shall be responsible for Countywide public education for used oil recycling. CoHHW Program public awareness responsibilities shall include, but not be limited to, the following activities:

- Serving as the formal contact to the local media such as local newspapers and television news stations;
- Providing participating jurisdictions with educational materials developed for the CoHHW Program;
- Promoting oil and oil filter recycling by developing, purchasing, and distributing educational materials, media relations materials, basic art work and camera ready advertising materials for distribution countywide and for use by jurisdictions;
- Representing the program through educational presentations at schools and businesses and attendance at community events such as local fairs and festivals; and
- Providing participating jurisdictions opportunities to review and comment on the development of countywide outreach materials.

CITY's public awareness responsibilities, at the sole discretion of the CITY, shall include, but not be limited to, the following activities:

- Providing a copy of HHW promotional materials to the CoHHW Program for review for accuracy and completeness, prior to publication;
- Developing and distributing HHW promotion communications to residents for local and CITY newsletters, newspapers and to the electronic media;
- Providing the CoHHW Program with a copy of HHW promotion materials produced by the CITY;
- Conducting and supporting outreach and publicity to attain the goal of 4% of households in the CITY participating in the CoHHW Program; and
- Providing the CoHHW Program a report summarizing all outreach activities conducted by the CITY during the fiscal year. The report is due 30 days after the end of the reporting period.

10. TEMPORARY HHW EVENTS

COUNTY shall conduct Temporary HHW Events at various sites located in Santa Clara County. COUNTY shall obtain all necessary permits and licenses required for the Temporary

HHW Events and shall provide or contract for the services of properly trained, qualified personnel and hazardous waste haulers, and shall provide or secure suitable equipment and supplies to properly receive, package, label, haul, recycle and dispose of the household hazardous wastes collected at the Temporary HHW Events.

When COUNTY conducts a Temporary HHW Event in CITY's jurisdiction, CITY agrees to provide solid waste and recycling services at such event at no cost to the CoHHW Program to ensure the proper management of non-hazardous waste generated at the event. Any additional expenses for such event incurred beyond the agreed-upon budget shall be subject to negotiation and mutual agreement between the COUNTY and the CITY.

To increase the Community's awareness of and participation in any Temporary HHW Event in CITY's jurisdiction, the CITY agrees to promote, at the CITY's sole expense, each such event to the residents at least thirty (30) days in advance before the scheduled date. The promotion may include, but is not limited to, bill inserts, door hangers, flyers, in-person outreach events, newsletters, press releases, public service announcements, social media, television public access stations, websites, etc.

11. HOUSEHOLD HAZARDOUS WASTE COLLECTION FACILITIES

COUNTY shall conduct collection operations at two County Household Hazardous Waste Collection Facilities (CoHHWCF).

The CoHHWCF are located at:

- ***San Martin, 13055 Murphy Avenue, San Martin, CA 95046***
- ***San José, 1608 Las Plumas, San José, CA 95133***

The COUNTY shall obtain all necessary permits and licenses required for the CoHHWCF and shall provide or contract for services, equipment, and supplies to properly receive, package, label, haul, recycle and dispose of wastes collected.

12. RECYCLING AND DISPOSAL PROGRAM FOR VERY SMALL QUANTITY GENERATORS

COUNTY will provide services to accept hazardous waste from Very Small Quantity Generators (VSQG) in accordance with Section 25218.3 of California Health and Safety Code, as amended from time to time. VSQG is defined in Section 25218.1(q) of California Health and Safety Code.

Eligible VSQGs include, but not limited to, small businesses, governmental entities, non-profit organizations, schools, special districts, etc. within the County so long as they meet the criteria as defined in Section 25218.1(q) of California Health and Safety Code. Eligible VSQGs will be allowed to bring their hazardous waste to CoHHWCF. These services to VSQGs located within the CITY will be provided on a cost recovery basis, which will include program administration,

on-site collection, transportation, and disposal costs. COUNTY will assume responsibility for fee collection from participating VSQG.

The CITY may choose to pay for services for VSQG's within the CITY and will notify the COUNTY in writing with 30-day advance notice in order to exercise this option. If the CITY exercises this option, the COUNTY will invoice the CITY for all costs associated with VSQG's within the CITY. If CITY has available Discretionary Funding, COUNTY may use this funding to pay for VSQG costs.

13. ABANDONED HOUSEHOLD HAZARDOUS WASTE

The CoHHW Program will allow for the disposal of abandoned HHW by government agencies and qualified nonprofit charitable reusers. Abandoned HHW means HHW left at a property by an unknown party. Abandoned household hazardous waste does not include waste generated by a known organization or agency in the course of normal business operations such as, but not limited to, the assembly or manufacture of products from new or used materials or the provision of charitable services such as classroom education, meal preparation, and shelter, or the provision of services for a fee.

A) GOVERNMENT AGENCIES

Government agencies shall be charged for disposal of abandoned HHW according to the CoHHW Program's rates for VSQGs.

B) NONPROFIT CHARITABLE REUSER

In order to qualify as a Nonprofit Charitable Reuser, the business must submit to the County Executive a request to be so designated. The County Executive shall review the request and supporting documentation and shall make a final decision on the designation. COUNTY will accept abandoned HHW from Nonprofit Charitable Reusers and will waive disposal fees on the cost of disposal of the abandoned HHW in an annual amount not to exceed funds available from the existing unexpended abandoned waste fund. Funding for disposal available to Nonprofit Charitable Reuser shall be on a first come first serve basis. Once the available fund to pay for the disposal of the abandoned HHW from Nonprofit Charitable Reusers is exhausted, disposal fees shall no longer be waived, and Nonprofit Charitable Reusers shall be charged for disposal of abandoned HHW according to the CoHHW Program's rates for VSQGs. No additional costs shall be applied to the budget of the CITY or any other participating jurisdiction.

14. HOUSEHOLD HAZARDOUS WASTES ACCEPTED

HHW accepted by the CoHHW Program shall be limited to those materials that qualify as "Household Hazardous Waste" pursuant to Section 25218.1(d) of California Health and Safety Code, as amended from time to time. These materials include, but are not limited to, automotive fluids, automotive and other types of batteries, latex and oil paint, oil filters, garden chemicals,

household cleaners, pool chemicals, mercury thermostats, fluorescent lamps containing mercury, household batteries, electronic waste (e-waste), and other common hazardous consumer products.

15. WASTES NOT ACCEPTED

Certain hazardous wastes shall not be accepted for collection and disposal. These include, but are not limited to, compressed gas cylinders larger than 5 gallons, radioactive materials, biohazardous waste, and explosives. Other wastes not accepted by the CoHHW Program are wastes generated as part of operating a business, including a home operated business, except that waste from VSQGs as provided for in Section 12 of this Agreement shall be accepted.

16. ADDITIONAL SERVICES UNDER THIS AGREEMENT

CITY must augment funding provided under this Agreement to cover the cost of a minimum participation level of 4% of CITY households; CITY may also elect to augment funding to provide additional services to increase CITY participation beyond the 4% minimum participation level. Additional services shall be made available upon written agreement between the CITY's authorized representative and the County Executive Officer or designee. Additional services may include, but are not limited to, additional appointments (charged at the Variable Cost Per Car rate), door-to-door HHW collection, used oil filter collection, universal waste collection, electronic waste collection, and abandoned waste collection.

CITY agrees to augment up to an additional $__79,341__ to the Countywide HHW Program during Fiscal Year 2025 for the purpose of attaining or increasing CITY household participation above the 4% minimum participation level at the scheduled collection dates listed in Attachment C, attached hereto and incorporated herein. Augmentation will be calculated, where applicable, at the Variable Cost Per Car rate. Other services will be charged based on a cost recovery basis. CITY authorizes the COUNTY to use CITY'S Available Discretionary Funding portion of the AB939 HHW Fee, if available, to offset the above agreed additional augmentation amount.

CITY agrees to make an interim payment to COUNTY amounting to 50 percent of the augmentation amount stated above for each fiscal year. This interim payment shall be made no later than September 30th of each fiscal year. The remaining balance of any outstanding cost shall be reconciled and paid or refunded in accordance with the terms outlined in the annual cost statement.

At the end of each fiscal year, a final annual cost statement shall be prepared by COUNTY and issued to CITY by November 30th. The annual cost statement will take into consideration costs incurred on behalf of CITY for additional services and all payments made by CITY to COUNTY. If any balance is owed to COUNTY, it will be due within 30 days following receipt of the annual cost statement. If any credit is owed to CITY, COUNTY will refund that amount to CITY within 30 days following delivery of the annual cost statement.

/ /

17. INFORMATION AND APPOINTMENT LINE

COUNTY will operate a telephone information and appointment desk Monday through Friday, from the hours of 9:00 a.m. to 5:00 p.m, except for COUNTY-recognized holidays The information service will register residents for the Temporary HHW Events and the collections at CoHHWCF. The information service will provide information about hazardous household materials. CITY will be notified immediately if resident participation approaches a level of service that may not be supported by available funding.

18. SCHEDULING AND SITE SELECTION

COUNTY shall work with CITY to determine the date(s) of Temporary Events and collections at the CoHHWCF. CITY shall coordinate with COUNTY in locating and securing sites for Temporary HHW Events. It is recognized that some participating jurisdictions in the CoHHW Program may not have appropriate sites available. A proposed HHW schedule for Fiscal Year 2025 of Temporary Events and collections at CoHHWCF is included as Attachment C. COUNTY will schedule an adequate number of collection days to serve the 4% level of service. The COUNTY determines the adequate number of collection days by tracking attendance at each event.

19. OUTSIDE FUNDING

During the term of this Agreement, COUNTY may seek outside funding sources for services that would supplement existing HHW services such as permanent collection sites, equipment, retail take-back collection and operational funding. If outside funding is obtained, the CoHHW Program will, at COUNTY's discretion, proceed with development of additional programs using that outside funding without drawing on CITY's funding provided under this Agreement.

20. REGIONAL GRANT AND OIL PAYMENT PROGRAM PARTICIPATION

The CITY authorizes the CoHHW Program to apply for lead agency grants, including but not limited to Used Oil Payment Program grants, from the California Department of Resources Recycling and Recovery (CalRecycle), on behalf of participating jurisdictions. The CoHHW Program will act on behalf of all participating jurisdictions, as the lead applicant and administrator. The CoHHW Program will oversee how the moneys are used and work in cooperation with CITY as to how the funds will be spent. Nothing in this section shall preclude the COUNTY or a participating jurisdiction from applying for grant funds in any case where the CoHHW Program does not apply for the grant opportunity.

21. EMERGENCY SERVICES

Participating jurisdictions, at their option, may desire to provide residents with convenient emergency opportunities to safely dispose of their HHW in the event of a disaster. The purpose of this emergency planning for HHW is to minimize potential public health and safety impacts, as well as to minimize costs and confusion. Attachment D sets out CITY and

COUNTY responsibilities for the collection of household hazardous wastes in response to an emergency. CITY shall make good faith efforts to provide the public with information related to the problems associated with HHW. Upon the decision to hold an emergency collection event, it is CITY's responsibility to make a good faith effort to prepare and disseminate the necessary outreach to notify the public of an emergency collection event. An emergency collection event shall be initiated by a written request from CITY to COUNTY. Emergency collection events can be scheduled in as little as ten (10) working days of CITY's written request or at an agreed upon date thereafter. The emergency collection plan is set out in Attachment D, Household Hazardous Waste Emergency Collection Plan.

COUNTY agrees to conduct the Emergency Collection Event at a mutually agreeable site and time. The COUNTY will obtain the necessary permit from California Department of Toxic Substances Control and will handle wastes in accordance with applicable state laws and regulations. COUNTY will bill CITY for all Emergency Collection Events on a cost recovery basis, and all payments shall be due COUNTY within 30 days following the receipt of the invoice.

22. PRIVATE SPONSORED EVENTS

COUNTY may also secure funding from corporations or agencies to conduct HHW Collection Events for corporate employees and residents of participating jurisdictions and to pay for special programs such as Universal Waste collection at retail locations. The transportation, treatment, and disposal liability for nonresident employee participation in these events shall be shared by all participating jurisdictions, including the CITY, and the COUNTY, as described in Section 26 of this Agreement. Summary information concerning these corporate sponsored events, if any, will be included in the CoHHW Program's annual report to the participating jurisdictions.

23. INSURANCE REQUIREMENTS

Contractors who provide hazardous waste transportation, treatment, or disposal services shall have the required insurance as outlined in Attachment E, Exhibit E Insurance Requirements for Environmental Services Contract. Other contractors shall have insurance in amounts to be determined by COUNTY Insurance Manager, after consultation with CITY. COUNTY shall obtain insurance certificates from each of the contractors prior to the contractor providing service to the program naming the COUNTY as an additional insured.

24. WASTE TRACKING AND REPORTING

COUNTY will provide a mid-year report to CITY regarding participation rates from each participating jurisdiction by March 15 of each year. Mid-year and year end reports will outline the types and quantities of waste collected, the amount of waste diverted for reuse or recycling and the waste management method for each waste stream and associated costs for services. COUNTY will prepare a report summarizing program activities which will be delivered to the participating jurisdictions no later than six months after the end of COUNTY's fiscal year.

It will be assumed for cost and reporting purposes that each participating jurisdiction is contributing to the waste stream in proportion to the number of its residents who directly participate.

COUNTY shall take steps to assure that the bi-annual statements to jurisdictions reflect the funds necessary to cover costs for CITY participation in services scheduled during the next quarter.

25. PARTICIPATION REPORTING

COUNTY shall employ means necessary to verify the place of residence of all participants in the CoHHW Program.

26. HOLD HARMLESS AND INDEMNIFICATION

In lieu of and not withstanding the pro rata risk allocation which might otherwise be imposed between CITY and COUNTY pursuant to Government Code Section 895.6, the parties agree that all losses or liabilities incurred by a party shall not be shared pro rata but instead COUNTY and CITY agree that pursuant to Government Code Section 895.4, each of the parties hereto shall fully indemnify and hold each of the other parties, their officers, board members, employees and agents, harmless from any claim, expense or cost, damage or liability imposed for injury (as defined by Government Code Section 810.8) occurring by reason of the negligent acts or omissions or willful misconduct of the indemnifying party, its officers, employees or agents, under or in connection with or arising out of any work, authority or jurisdiction delegated to such party under this Agreement. No party, nor any officer, board member, employee or agent thereof shall be responsible for any damage or liability occurring by reason of the negligent acts or omissions or willful misconduct of the other parties hereto, their officers, board members, employees or agents, under or in connection with or arising out of any work authority or jurisdiction delegated to such other parties under this Agreement.

Additionally, CITY shall indemnify COUNTY for CITY's apportioned share of any liability incurred and attributed to the Countywide HHW Program for the transportation, treatment or disposal of the household hazardous waste, once the waste has been accepted by a licensed hazardous waste hauler. Apportionment for disposal liability shall be determined by each participating jurisdiction's pro rata proportion of household participation in the Program. Apportionment for transportation and treatment liability shall be determined by each participating jurisdiction's pro rata household participation at the event where the waste was generated. COUNTY will use reasonable efforts to obtain recovery from all available resources, including insurance, of any liable hauler or liable disposal facility operator. No liability shall be apportioned to CITY for transportation, treatment or disposal in any case where COUNTY has contracted for such services and has failed to require the contractor to maintain the insurance requirements set forth in Section 23 above.

CITY shall further indemnify COUNTY for CITY's apportioned share of liability incurred and attributed to the Countywide HHW Program for the transportation, treatment or disposal of household hazardous waste at corporate sponsored events where non-county resident

employees of the corporate sponsor are authorized to participate in the event. Liability for the nonresident portion of the disposal of waste shall be shared by the participating jurisdictions and the COUNTY as described above. The nonresident portion shall be determined by calculating the percentage of nonresidents participating in the event. This percentage will then be subtracted from the total liability for the household hazardous waste prior to assessing CITY's apportioned share of any liability for the household hazardous waste.

COUNTY shall require VSQGs and Nonprofit Charitable Reusers to indemnify COUNTY, at minimum, for their apportioned share of any liability incurred and attributed to the Countywide HHW Program for the transportation, treatment, or disposal of their hazardous waste, once the waste has been accepted by a licensed hazardous waste hauler. The VSQG and Nonprofit Charitable Reuser portion of the waste shall be determined by calculating the percentage, by weight, of the total household hazardous waste accepted by the CoHHW Program. This percentage will be used to calculate the portion of liability attributed to VSQGs and Nonprofit Charitable Reusers and will be subtracted from the total liability prior to assessing CITY's apportioned share of any liability for household hazardous waste.

27. TERMINATION

This Agreement may be terminated by either the COUNTY or CITY upon thirty (30) days written notice given by the terminating party.

28. TERM OF AGREEMENT

The term of this Agreement shall be from July 1, 2024 to June 30, 2027, or until all revenue from the last quarter's AB939 fee payments have expended and/or distributed, whichever is later.

29. INDEPENDENT CONTRACTOR

Each party shall perform responsibilities and activities described herein as an independent contractor and not as an officer, agent, servant or employee of any of the parties hereto. Each party shall be solely responsible for the acts and omissions of its officers, agents, employees, contractors and subcontractors, if any. Nothing herein shall be considered as creating a partnership or joint venture between the parties.

30. EXECUTION BY COUNTERPART

This Agreement may be executed in any number of counterparts, each of which shall for all purposes be deemed an original and all of which shall together constitute one and the same instrument.

31. CONTROLLING LAW

This Agreement shall be governed and construed in accordance with the laws of the State of California.

32. ENTIRE AGREEMENT

This document embodies the entire Agreement between the parties with respect to the subject matter hereof. No modification of this Agreement shall be effective unless and until modification is evidenced by writing signed by all parties or their assigned designates.

33. NOTICES

All notices and communications herein required shall be in writing to the other party as follows, unless expressly changed in writing:

CITY of _____

City Representative _____
Representative's Title _____
City Address _____
_____
_____

County of Santa Clara

Director
Consumer and Environmental Protection Agency
1553 Berger Drive
San José, California 95112

34. CONTRACT EXECUTION

Unless otherwise prohibited by law or COUNTY policy, the parties agree that an electronic copy of a signed contract, or an electronically signed contract, has the same force and legal effect as a contract executed with an original ink signature. The term "electronic copy of a signed contract" refers to a transmission by facsimile, electronic mail, or other electronic means of a copy of an original signed contract in a portable document format. The term "electronically signed contract" means a contract that is executed by applying an electronic signature using technology approved by the COUNTY.

/ /

/ /

/ /

/ /

/ /

/ /

IN WITNESS WHEREOF, the parties have executed this AGREEMENT FOR COUNTYWIDE HOUSEHOLD HAZARDOUS WASTE COLLECTION PROGRAM on the dates as stated below:

Date: _____

COUNTY OF SANTA CLARA

_____
JAMES R. WILLIAMS
County Executive

Date: _____

"CITY"

_____
CITY/TOWN OF _____
Title _____
A municipal corporation

APPROVED AS TO FORM AND LEGALITY:

_____
WILLIE NGUYEN
Deputy County Counsel

Attachments:

A Projected Fiscal Years 2025, 2026, and 2027 AB939 HHW Fee Funding Allocation by Jurisdiction
B Estimated HHW Program Fixed Costs for Fiscal Years 2025, 2026, and 2027
C HHW Schedule of Collection Events for Fiscal Year 2025
D Household Hazardous Waste Emergency Collection Plan
E Exhibit-E Insurance Requirements for Environmental Services Contracts

ATTACHMENT A: PROJECTED FISCAL YEARS 2025-2027 ANNUAL HHW FEE FUNDING ALLOCATION BY JURISDICTION

Cities	No of Households	4% of Households	Disposal Tonnage	AB939 HHW Fee per Ton $2.60	Fixed Cost per HH $5.07	SJ Facility Surcharge $8.09	Variable Cost per Car $66.02	Abandoned Waste Disposal Cost per HH $0.05	Discretionary Fund	**Estimated Augmentation**	Anticipated Participation	Anticipated Participation at SJ Facility
Campbell	18,451	738	37,162	$ 96,620	$ 93,494	$ 5,971	$ 48,725	$ 923	$ (52,493)	**$ 80,093**	1,156	1,056
Cupertino	21,787	871	29,930	$ 77,819	$ 110,398	$ 7,050	$ 57,535	$ 1,089	$ (98,254)	**$ 133,081**	1,399	936
Gilroy	18,784	751	60,599	$ 157,558	$ 95,181	$ 6,079	$ 49,605	$ 939	$ 5,754	**$ 27,110**	1,162	154
Los Altos	11,871	475	16,597	$ 43,153	$ 60,152	$ 3,842	$ 31,349	$ 594	$ (52,784)	**$ 96,037**	1,130	784
Los Altos Hills	3,151	126	5,589	$ 14,531	$ 15,967	$ 1,020	$ 8,321	$ 158	$ (10,934)	**$ 22,221**	297	174
Los Gatos	14,006	560	23,770	$ 61,802	$ 70,970	$ 4,532	$ 36,987	$ 700	$ (51,388)	**$ 94,219**	1,209	1,199
Milpitas	25,769	1,031	59,694	$ 155,204	$ 130,575	$ 8,339	$ 68,051	$ 1,288	$ (53,049)	**$ 79,341**	1,429	969
Monte Sereno	1,353	54	735	$ 1,911	$ 6,856	$ 438	$ 3,573	$ 68	$ (9,024)	**$ 17,334**	180	185
Morgan Hill	16,178	647	44,235	$ 115,011	$ 81,976	$ 5,235	$ 42,723	$ 809	$ (15,732)	**$ 75,407**	1,551	392
Mountain View	39,194	1,568	51,011	$ 132,629	$ 198,602	$ 12,684	$ 103,504	$ 1,960	$ (184,120)	**$ 169,083**	1,340	772
Palo Alto	29,285	1,171	45,188	$ 117,489				$ 1,464	$ 116,025			
San Jose	345,798	13,832	827,019	$ 2,150,250	$ 1,752,210	$ 111,904	$ 913,183	$ 17,290	$ (644,337)	**$ 1,186,168**	22,039	20,539
Santa Clara	53,370	2,135	113,691	$ 295,597	$ 270,434	$ 17,271	$ 140,939	$ 2,669	$ (135,715)	**$ 237,003**	3,669	2,010
Saratoga	11,353	454	17,897	$ 46,533	$ 57,527	$ 3,674	$ 29,981	$ 568	$ (45,217)	**$ 76,767**	932	800
Sunnyvale	63,111	2,524	99,239	$ 258,021	$ 319,793	$ 20,423	$ 166,664	$ 3,156	$ (252,014)	**$ 262,351**	2,681	1,533
Unincorporated	18,558	742	45,693	$ 118,802	$ 94,036	$ 6,006	$ 49,008	$ 928	$ (31,176)	**$ 80,009**	1,482	845
Total	692,019	27,681	1,478,050	$ 3,842,931	$ 3,358,172	$ 214,467	$ 1,750,148	$ 34,601	$ (1,514,457)	**$ 2,636,224**	41,656	32,348

Notes: No of HH and Disposal tonnage are based on FY2022-2023 actuals. Anticipated participation and anticipated participation at SJ facility are based on 10% increase from FY2022-2023 actual participation.

ATTACHMENT B: ESTIMATED ANNUAL HHW PROGRAM FIXED COSTS FOR FISCAL YEARS 2025, 2026, AND 2027

FIXED COST		
Staff Salary and Benefits		$ 1,926,605.10
County Admin Overhead		$667,328
County Counsel		$17,745
Phones and Communications		$13,787
Facilities Lease Costs	San Jose	$215,880
Vehicle Costs		$44,363
Office Supplies and postage		$4,430
Maintenance, Software		$150,150
HHW Hotline		$150,000
Garbage & Utilities		$47,434
Membership & Dues		$20,475
Training & Conference		$6,825
Safety Wear		$28,392
Printing		$11,632
Other Services & Supplies		$53,127
ESTIMATED ANNUAL TOTAL		**$ 3,358,171.77**

ATTACHMENT C: HHW SCHEDULE OF PERMANENT & TEMPORARY COLLECTION EVENTS FOR FISCAL YEAR 2025-2027*

2024/Month	Day	Date	Location	Type of Event	County Holidays/ Notes
July	Wed	3	San Jose	Permanent	
	Thursday	4	No Event	No Event	4th OF JULY
	Fri,Sat	5,6	San Jose	Permanent	
	Fri,Sat	5,6	San Martin	Permanent	
	Thurs,Fri	11,12	San Jose	Permanent	
	Saturday	13	Sunnyvale	Temporary	Confirmed
	Thurs,Fri,Sat	18,19,20	San Jose	Permanent	
	Thurs,Fri,Sat	25,26,27	San Jose	Permanent	
August	Thurs,Fri,Sat	1,2,3	San Martin	Permanent	
	Thurs,Fri,Sat	1,2,3	San Jose	Permanent	
	Fri,Sat	4,5	San Martin	Permanent	
	Thurs,Fri,Sat	8,9,10	San Jose	Permanent	
	Thurs,Fri,Sat	15,16,17	San Jose	Permanent	
	Thurs,Fri	22,23	San Jose	Permanent	
	Saturday	24	Mountain View	Temporary	Confirmed
	Thurs,Fri	29,30	San Jose	Permanent	
	Saturday	31	No Event	No Event	LABOR DAY WEEKEND
September	Thurs,Fri,Sat	5,6,7	San Martin	Permanent	
	Thurs,Fri,Sat	5,6,7	San Jose	Permanent	
	Thurs,Fri,Sat	12,13,14	San Jose	Permanent	
	Thurs,Fri	19,20	San Jose	Permanent	
	Saturday	21	Santa Clara	Temporary	Confirmed
	Thurs,Fri,Sat	26,27,28	San Jose	Permanent	
October	Thurs,Fri,Sat	3,4,5	San Martin	Permanent	
	Thurs,Fri,Sat	3,4,5	San Jose	Permanent	
	Thurs,Fri,Sat	10,11	San Jose	Permanent	
	Saturday	12	Sunnyvale	Temporary	Confirmed
	Thurs,Fri,Sat	17,18,19	San Jose	Permanent	
	Thurs,Fri,Sat	24,25,26	San Jose	Permanent	
	Thurs	31	San Jose	Permanent	
November	Fri, Sat	1,2	San Jose	Permanent	
	Thurs,Fri, Sat	7,8,9	San Martin	Permanent	
	Thurs	7,8,9	San Jose	Permanent	
	Thurs,Fri,Sat	14,15,16	San Jose	Permanent	
	Thurs,Fri,Sat	21,22,23	San Jose	Permanent	
	Thurs,Fri,Sat	28,29,30	No Event	No Event	THANKSGIVING
December	Fri, Sat	5,6,7	San Martin	Permanent	
	Thurs,Fri,Sat	5,6,7	San Jose	Permanent	
	Thurs,Fri,Sat	12,13,14	San Jose	Permanent	
	Thurs,Fri,Sat	19,20,21	San Jose	Permanent	
	Wed,Thurs	25,26	No Event	No Event	CHRISTMAS
	Fri,Sat	27,28	San Jose	Permanent	

ATTACHMENT C: HHW SCHEDULE OF PERMANENT & TEMPORARY COLLECTION EVENTS FOR FISCAL YEAR 2025-2027* (Continued)

2025/Month	Day	Date	Location	Type of Event	County Holidays/ Notes
January	Wed	1	No Event	No Event	NEW YEAR'S
	Thurs,Fri, Sat	2,3,4	San Martin	Permanent	
	Thurs,Fri,Sat	2,3,4	San Jose	Permanent	
	Thurs,Fri	9,10	San Jose	Permanent	
	Saturday	11	Sunnyvale	Temporary	TBD
	Thurs,Fri,Sat	16,17,18	San Jose	Permanent	
	Thurs,Fri	23,24	San Jose	Permanent	
	Saturday	25	Santa Clara	Temporary	TBD
	Thurs,Fri	30,31	San Jose	Permanent	
February	Sat	1	San Jose	Permanent	
	Thurs,Fri, Sat	6,7,8	San Martin	Permanent	
	Thurs,Fri,Sat	6,7,8	San Jose	Permanent	
	Thurs,Fri,Sat	13,14,15	San Jose	Permanent	
	Thurs,Fri,Sat	20,21,22	San Jose	Permanent	
	Thurs,Fri	27,28	San Jose	Permanent	
March	Sat	1	San Jose	Permanent	
	Thurs,Fri, Sat	6,7,8	San Martin	Permanent	
	Thurs,Fri,Sat	6,7,8	San Jose	Permanent	
	Thurs,Fri,Sat	13,14,15	San Jose	Permanent	
	Thurs,Fri,Sat	20,21,22	San Jose	Permanent	
	Thurs,Fri,Sat	27,28,29	San Jose	Permanent	
April	Thurs,Fri,Sat	3,4,5	San Jose	Permanent	
	Thurs,Fri, Sat	3,4,5	San Martin	Permanent	
	Thurs,Fri	10,11	San Jose	Permanent	
	Saturday	12	Los Altos	Temporary	TBD
	Thurs,Fri	17,18	San Jose	Permanent	
	Saturday	19	Sunnyvale	Temporary	TBD
	Thurs,Fri	24,25	San Jose	Permanent	
	Saturday	26	Santa Clara	Temporary	TBD
May	Thurs,Fri,Sat	1,2,3	San Jose	Permanent	
	Thurs,Fri, Sat	1,2,3	San Martin	Permanent	
	Thurs,Fri,Sat	8,9,10	San Jose	Permanent	
	Thurs,Fri,Sat	15,16,17	San Jose	Permanent	
	Thurs,Fri	22,23	San Jose	Permanent	
	Saturday	24	No Event	No Event	MEMORIAL DAY WEEKEND
	Thurs,Fri,Sat	29,30,31	San Jose	Permanent	
June	Thurs,Fri, Sat	5,6,7	San Martin	Permanent	
	Thurs,Fri,Sat	5,6,7	San Jose	Permanent	
	Thurs,Fri	12,13	San Jose	Permanent	
	Saturday	14	Milpitas	Temporary	TBD
	Thurs, Fri,Sat	19,20,21	San Jose	Permanent	
	Thurs,Fri,Sat	26,27,28	San Jose	Permanent	

*SUBJECT TO CHANGE

ATTACHMENT D:

COUNTY HOUSEHOLD HAZARDOUS WASTE EMERGENCY COLLECTION PLAN

1. PURPOSE

The purpose of the Household Hazardous Waste Emergency Collection Plan is to minimize potential public health and safety impacts, as well as to minimize costs and confusion during an emergency or disaster. This Attachment describes the services the County can provide and the responsibilities of each party for the collection of household hazardous wastes (HHW) in response to an emergency as defined by the local jurisdiction.

Jurisdictions should contact local emergency agencies, the Governor's Office of Emergency Services (OES), and California Department of Toxic Substances Control (DTSC) for more specific information on hazardous materials emergency response.

2. Timing of HHW

While it is important to have special collection opportunities for disaster-related HHW as soon as possible to avoid illegal disposal or harm to people and/or the environment, having an event or service too soon after a disaster may result in low participation. Sufficient public notification, assessment and monitoring of the disaster and cleanup process by the designated City HHW Coordinator(s) is essential.

3. Public Information/Notification:

Cities should be prepared to provide the public with information related to the problems associated with HHW along with information about special collection events and services. Upon the decision to hold an emergency collection event, it is the City's responsibility to prepare and deliver the necessary public outreach to notify the public of an upcoming event. A City's public outreach program should evaluate all forms of media including: newspaper ads, posters, flyers, press releases, banners, door-to-door notices, roadside signs, signs on dumpsters, radio public service announcements, social media outlets and television public access stations. Be aware of communities where multiple language outreach efforts will be necessary.

4. State HHW Collection Permits

DTSC is responsible for issuing the necessary state permits for HHW collection facilities. During an emergency, the County will obtain the necessary emergency permit for special collection of household hazardous waste from DTSC through their expedited approval process.

5. Collection Events

Temporary collection events can be set-up at various sites including parking lots, city maintenance yards, within neighborhoods needing service, and at landfills or a centralized

location to service larger segments of the population. Waste collected will be transported with a transportation vehicle provided by the HHW Program. In addition, events can be scheduled at the two existing Countywide Household Hazardous Waste Collection Facilities (CoHHWCF). The following options are available to each participating City.

- Neighborhood Drop-off Events: The County is able to provide localized service to specific areas in need of household hazardous waste collection services. The County will work with City Solid Waste Coordinators to conduct coordinated efforts to residents in the affected area. After a specific event, waste will be transported by County staff or a hazardous waste contractor to an appropriate facility.

- Mobile HHW Event: The County conducts Household Hazardous Waste Collection Event (Events) at various sites located in Santa Clara County throughout the year. Events will be expanded to give priority to disaster victims when requested by the City. The County shall obtain all necessary permits and licenses required for the events and shall provide and/or contract for the services of properly trained personnel and hazardous waste haulers. The County shall also provide or secure suitable equipment and supplies to properly receive, package, label, haul, recycle and dispose of the household hazardous wastes collected at events.

- CoHHWCF: The County operates two permitted HHW collection facilities for the collection and storage of HHW. The County shall provide or contract for services, equipment, and supplies to properly receive, package, label, haul, recycle and dispose of wastes collected at the CoHHWCF.

  The CoHHWCF are located at:

  San Martin, 13055 Murphy Ave, San Martin, CA 95046
  San Jose, 1608 Las Plumas, San Jose, CA 95133

6. Costs, Documentation, and Reimbursements

Cities will be billed on a cost recovery basis. Costs of emergency events will be tracked and billed separately. Emergency funding applications pending from the State or Federal government for reimbursements in no way relieves the City of responsibility to make timely payment to the County in accordance with the terms of the AGENCY AGREEMENT FOR COUNTYWIDE HOUSEHOLD HAZARDOUS WASTE COLLECTION PROGRAM.

The County agrees to provide the City with a detailed accounting of services provided for an emergency collection. Documentation will track the time and materials of staff, outside contractor expenses, and quantities and types of waste collected to demonstrate that the wastes were generated above and beyond existing collection programs.

Services to businesses will be provided on a cost recovery basis and according to Section 12 of the AGENCY AGREEMENT FOR COUNTYWIDE HOUSEHOLD HAZARDOUS WASTE COLLECTION PROGRAM, which includes program administration, on-site collection, transportation, and disposal costs. The County will assume responsibility for collecting fees from participating businesses.

7. State and Federal Assistance and Funds

It is the City's responsibility to pursue reimbursement from State or Federal agencies.

California Governor's Office of Emergency Services (Cal OES)

Cal OES is responsible for requesting assistan is declared a state disaster area, and the local jurisdiction deems that the needs of the disaster response are beyond ce on behalf of local jurisdictions for resources beyond the capability of the jurisdiction. State assistance may include assistance available from State, Federal, or private sources. If a local jurisdiction its capabilities, then the local jurisdiction can request assistance and reimbursement of costs from Cal OES.

Follow Standardized Emergency Management System (SEMS)
All requests and emergency responses must be in accordance with the SEMS. DTSC may have funding available for hazardous waste response and collection.

Federal Assistance
If a state disaster area is declared a federal disaster, then federal funding assistance may be available through the Cal OES. Funding and assistance may be available from Federal agencies such as FEMA and the USEPA.

Damage estimates: The city should provide to the Cal OES estimates of damages and a "scope of work requested." It is recommended that the local HHW coordinator meet ahead of time with local emergency agencies or Cal OES contacts regarding the proper procedures and wording of requests for assistance.

Funding Process: The funding process may vary depending on the unique circumstances of the disaster. The process can either be the traditional FEMA reimbursement process, or by direct assistance from USEPA.

REFERENCES

California Integrated Waste Management Board, Integrated Waste Management Disaster Plan: Guidance for local government on disaster debris management, January 1997.

Emergency Planning Contacts and Personnel

Primary County Contact: County of Santa Clara
Consumer and Environmental Protection Agency
Household Hazardous Waste Program
ATTN: Hazardous Materials Program Manager
(408)-918-1967

For Non-Emergency after-hours, contact County Communications at: (408) 977-3220

Responsibility: Coordinate and establish proper collection and disposal methods for household hazardous waste. Assess the need for HHW and VSQG services in consultation with the City and other operations.

Cal OES Public Safety Communications Main Office
601 Sequoia Pacific Boulevard
Sacramento, CA 95811
(916) 894-5209

Cal OES
3650 Schriever Avenue
Mather, CA 95655-4203
(916) 845-8510

CHEMTREC Emergency number, (800) 424-9300
Non-emergency (800) 262-8200

Chemtrec is a public service established by the Chemical Manufacturers Association. The Center was developed as a resource for obtaining immediate emergency response information to mitigate accidental chemical releases, and as a means for emergency responders to obtain technical assistance from chemical industry product safety specialists, emergency response coordinators, toxicologists, physicians, and other industry experts to safely mitigate incidents involving chemicals.

EXHIBIT E

INSURANCE REQUIREMENTS FOR
ENVIRONMENTAL SERVICES
CONTRACTS
(Hazardous Waste Disposal, Remediation Services, Environmental Consulting, etc.)

Indemnity

The Contractor shall indemnify, defend, and hold harmless the County of Santa Clara (hereinafter "County"), its officers, agents and employees from any third party claim, liability, loss, injury or damage to the extent arising out of, or in connection with, performance of this AGREEMENT by Contractor and/or its agents or employees, excepting only loss, injury or damage caused by the sole negligence or willful misconduct of personnel employed by the County. It is the intent of the parties to this AGREEMENT to provide the broadest possible coverage for the County. The Contractor shall reimburse the County for all costs, attorneys' fees, expenses and liabilities incurred with respect to any litigation in which the Contractor contests its obligation to indemnify, defend and/or hold harmless the County under this AGREEMENT and does not prevail in that contest.

Insurance

Without limiting the Contractor's indemnification of the County, the Contractor shall provide and maintain at its own expense, during the term of this AGREEMENT, or as may be further required herein, the following insurance coverages and provisions:

A. Evidence of Coverage

Prior to commencement of this AGREEMENT, the Contractor shall provide a Certificate of Insurance certifying that coverage as required herein has been obtained. Individual endorsements executed by the insurance carrier shall accompany the certificate.

This verification of coverage shall be sent to the requesting County department, unless otherwise directed. The Contractor shall not receive a Notice to Proceed with the work under the AGREEMENT until it has obtained all insurance required and such insurance has been approved by the County. This approval of insurance shall neither relieve nor decrease the liability of the Contractor.

B. Qualifying Insurers

All coverages, except surety, shall be issued by companies which hold a current policy holder's alphabetic and financial size category rating of not less than A- V, according to the current Best's Key Rating Guide or a company of equal financial stability that is approved by the County's Insurance Manager.

C. Notice of Cancellation

Should any of the requested policies be cancelled before the expiration date, notice will be provided in accordance with policy provisions.

D. Insurance Required

1. Commercial General Liability Insurance - for bodily injury (including death) and property damage which provides limits as follows:

   a. Each occurrence - $1,000,000

   b. General aggregate - $2,000,000

   c. Products/Completed Operations aggregate - $2,000,000

   d. Personal Injury - $1,000,000

2. General liability coverage shall include:

   a. Premises and Operations

   b. Products/Completed

   c. Personal Injury liability

   d. Severability of interest

3. General liability coverage shall include the following endorsement, a copy of which shall be provided to the County:

   Additional Insured Endorsement, (Commercial General Liability Additional Insured provided pursuant to Additional Insured Endorsement #1), which shall read:

   > "County of Santa Clara, and members of the Board of Supervisors of the County of Santa Clara, and the officers, agents, and employees of the County of Santa Clara, individually and collectively, as additional insureds provided pursuant to Additional Insured Endorsement Form #1."

Insurance afforded by the additional insured endorsement shall apply as primary insurance, and other insurance maintained by the County of Santa Clara, its officers, agents, and employees shall be excess only and not contributing with insurance provided

under this policy. Public Entities may also be added to the Additional Insured Endorsement Form #1 as applicable by way of insurance addendum, and the contractor shall be notified by the contracting department of these requirements.

4. Automobile Liability Insurance

For bodily injury (including death) and property damage which provides total limits of not less than one million dollars ($1,000,000) combined single limit per occurrence applicable to all owned, non-owned and hired vehicles. Coverage shall include Environmental Impairment Liability Endorsement MCS90 for contracts requiring the transportation of hazardous materials/wastes.

5. Workers' Compensation and Employer's Liability Insurance

a. Statutory California Workers' Compensation coverage including broad form all-states coverage.

b. Employer's Liability coverage for not less than one million dollars ($1,000,000) per occurrence.

6. Contractors Pollution Liability Insurance

Coverage shall provide a minimum of not less than five million dollars ($5,000,000) per occurrence and aggregate for bodily injury, personal injury, property damage and cleanup costs both on and offsite.

7. Professional Errors and Omissions Liability Insurance (required for contractors providing professional services, such as through a professional engineer, registered geologist, etc.)

a. Coverage shall be in an amount of not less than one million dollars ($1,000,000) per claim/aggregate.

b. If coverage contains a deductible or self-retention, it shall be reviewed and approved by the County's Insurance Manager prior to contract execution.

c. Coverage as required herein shall be maintained for a minimum of two years following termination or completion of this AGREEMENT.

Exhibit E (Continued)

8. Claims Made Coverage

If coverage is written on a claims made basis, the Certificate of Insurance shall clearly state so. In addition to coverage requirements above, such policy shall provide that:

a. Policy retroactive date coincides with or precedes the Consultant's start of work (including subsequent policies purchased as renewals or replacements).

b. Policy allows for reporting of circumstances or incidents that might give rise to future claims. If coverage terminated Run-Off (Tail) coverage will be purchased for three (3) years following termination.

E. Special Provisions

The following provisions shall apply to this AGREEMENT:

1. The foregoing requirements as to the types and limits of insurance coverage to be maintained by the Contractor and any approval of said insurance by the County or its insurance consultant(s) are not intended to and shall not in any manner limit or qualify the liabilities and obligations otherwise assumed by the Contractor pursuant to this AGREEMENT, including but not limited to the provisions concerning indemnification.

2. The County acknowledges that some insurance requirements contained in this AGREEMENT may be fulfilled by self-insurance on the part of the Contractor. However, this shall not in any way limit liabilities assumed by the Contractor under this AGREEMENT. Any self-insurance shall be approved in writing by the County upon satisfactory evidence of financial capacity. Contractors obligation hereunder may be satisfied in whole or in part by adequately funded self-insurance programs or self-insurance retentions.

3. Should any of the work under this AGREEMENT be sublet, the Contractor shall require each of its subcontractors of any tier to carry the aforementioned coverages.

4. The County reserves the right to withhold payments to the Contractor in the event of material noncompliance with the insurance requirements outlined above.

Exhibit E (Continued)

F. Fidelity Bonds (Required only if contractor will be receiving advanced funds or payments)

Before receiving compensation under this AGREEMENT, Contractor will furnish County with evidence that all officials, employees, and agents handling or having access to funds received or disbursed under this AGREEMENT, or authorized to sign or countersign checks, are covered by a BLANKET FIDELITY BOND in an amount of AT LEAST fifteen percent (15%) of the maximum financial obligation of the County cited herein. If such bond is canceled or reduced, Contractor will notify County immediately, and County may withhold further payment to Contractor until proper coverage has been obtained. Failure to give such notice may be cause for termination of this AGREEMENT, at the option of County.

CITY OF MILPITAS
AGENDA REPORT
(AR)

Item Title:	**Approve a Professional Service Agreement with Backflow Prevention Specialists, Inc. for the Backflow Hazard Assessment Survey (Staff Contact: Christian Di Renzo, Public Works Director, 408-586-2602; and Michael Silveira, City Engineer, 408-586-3303)**
Category:	Consent Calendar-Community Services and Sustainable Infrastructure
Meeting Date:	5/21/2024
Recommendation:	Approve and authorize the City Manager to execute a Professional Service Agreement with Backflow Prevention Specialists, Inc. in the amount of $121,394.00 for the Backflow Hazard Assessment Survey.

BACKGROUND:

Cross Connection Control Program, Project No. 7140 ("Project") is in the adopted 2025-2029 Capital Improvement Program. The City of Milpitas (City) owns, maintains and operates a public drinking water system (System) that distributes potable water to customers through over 16,000 service connections. Approximately 2,200 of these services, primarily those serving commercial, industrial, fire and irrigation customers, are equipped with backflow prevention assemblies (BPA) to safeguard the System from potential backflow of contaminants and pollutants, as required by Title 17 and Title 22 of the State Water Resources Control Board (SWRCB) California Code of Regulations (CCR). To comply with the regulations and ensure the System and its customers are safeguarded from backflows into the System, the City administers the Cross-Connection Control Program (Program). Through the City's Program, water customers with BPAs are notified annually to have a certified backflow tester test their BPAs for proper functionality and to make any repairs or replacements if the assembly fails, as required by the CCRs. Compliance with the CCRs is defined by all 2,200 BPAs having a pass test by December 31st of each calendar year.

Because BPAs vary by the level of protection they provide, a fundamental component of the Program is for the City to ensure the type of BPA(s) for any given service is commensurate with the type of hazard(s) present. This is accomplished by performing periodic Hazard Assessment Surveys (Survey).

The key regulations and assessments for the City on how and when to perform a Survey are:

- Regulatory requirements: Pursuant to Title 17 of the CCR (Article 2, Section 7604), *the type of backflow protection shall be commensurate with the degree of hazard that exists on the costumer's premises*.
- SWRCB Sanitary Surveys: In November of 2022, SWRCB performed a Sanitary Survey of the City System. SWRCB identified improvement measures for the City to address, including the need to bolster the City Program. Staff developed a plan in response to SWRCB Sanitary Survey findings, which outlined steps the City will take to address the Program needs, notably, to conduct a City-wide Survey.
- SWRCB Cross-Connection Control Policy Handbook (CCCPH): The CCCPH was adopted by SWRCB on December 19th, 2023 and establishes enforceable standards and principles, which apply to all Public Water Systems in California. Pursuant to the CCCPH Article 1, section 3.1.4, *Public Water Systems are required to submit a Cross-Connection Control Plan (Plan) by July 1, 2025 and perform an initial hazard assessment survey*. The CCCPH requires the City to identify any non-compliant BPAs or services without BPAs and outline a strategy in the Plan to bring these sites into compliance. Furthermore, the City is required to perform periodic follow-up Surveys per the criteria listed in the CCCPH Article 2, section 3.2.1(e).
-

ANALYSIS:
To identify the total number of services requiring a Survey, Staff evaluated commercial, industrial, fire and irrigation water services and categorized each service into one of four groups, based on the type of the existing BPA:

Grouping	Backflow Type	Description
1	Registered BPA is Reduced Pressure Principle (RP) or must be upgraded to RP	Water services that are equipped with "Reduced Pressure Principal" (RP) type of BPA provide the System with the highest level of protection. Services that have a known hazard for which an RP BPA is required pursuant to Title 17 of the CCR Article 2, section 7604, or services already equipped with a verified RP BPA were excluded from the total amount of services requiring a hazard assessment.
2	Registered BPA is Non-RP and Non-DC	Services equipped with a BPA that is neither a RP or Double Check Valve (DC) BPA are included in the Survey to evaluate whether an upgrade to an RP or a DC BPA is warranted.
3	Registered BPA is DC	Services equipped with a DC are included in the Survey to evaluate if an upgrade to RP is warranted.
4	Service has an unknown BPA type or may have an unregistered BPA	Services with an unknown BPA type or services that may have an unregistered BPA are included in the Survey and if determined the BPA is not a RP, the service must be included in a Survey.

After an evaluation by staff using the criteria above, a total of 406 services were identified as needing a hazard assessment survey. The selected vendor will perform a Survey for each service to determine the degree of hazard and make recommendations if any, in accordance with the Article 2 of the CCCPH. The Survey is not only critical in the City's efforts to safeguard the System and its customers, but also satisfies the mandates set forth by SWRCB, in both the 2022 Sanitary Survey and in the CCCPH. Additionally, the results of the Survey will serve as the framework of the Plan, which the City must submit to SWRCB by July 1st, 2025.

Staff released a Request for Proposals (RFP) Project ID: 2022-REQ-683 for Backflow Hazard Assessment Survey on November 29, 2023. The RFP was advertised through the City procurement platform, OpenGov Procurement, with a proposal due date of January 4, 2024; no proposals were received. As authorized by City Muni-Code I-2-3.08(f) and by the City Purchasing Agent, staff went to the open market to seek out proposals from qualified vendors and negotiated a scope of services with Backflow Prevention Specialists, Inc. for a not-to-exceed fee of $121,394.00, which is considered reasonable for the service to be rendered for this work.

POLICY ALTERNATIVE(S):
Alternative: Not approving the professional service agreement with Backflow Prevention Specialists, Inc.

Pros: None.

Cons: Pursuant to the SWRCB CCCPH (Article 2, section 3.2.1), the City must perform an initial Hazard Assessment Survey. Failure to comply may result in issuance of non-compliance enforcement or other corrective actions against the City.

FISCAL IMPACT:
There is sufficient funding available in the Cross-Connection Control Program, Capital Improvement Project No. 7140, which is funded through Water Capital Surcharge Fund. Funding source comes from water capital surcharge fees. As of May 14, 2024, the balance in CIP 7140 is $750,000.

Available Project Budget as of April 30, 2024	$750,000
Professional Service Agreement	($121,394)
Remaining Project Budget	$628,606

CALIFORNIA ENVIRONMENTAL QUALITY ACT (CEQA):
By the definition provided in the California Environmental Quality Act (CEQA) Guidelines Section 15378, this action does not qualify as a “project” for the purpose of CEQA as this action has no potential to result in either a direct physical change in the environment, or a reasonably foreseeable indirect physical change in the environment.

RECOMMENDATION:
Approve and authorize the City Manager to execute a Professional Service Agreement with Backflow Prevention Specialists, Inc. in the amount of $121,394.00 for the Backflow Hazard Assessment Survey.

ATTACHMENT(S):
Professional Services Agreement with Backflow Prevention Specialists, Inc.

CITY OF MILPITAS
PROFESSIONAL SERVICES AGREEMENT

This Agreement is made and entered into as of _____, ("Effective Date") by and between the City of Milpitas, a municipal corporation organized and operating under the laws of the State of California with its principal place of business at 455 E. Calaveras Boulevard, Milpitas, California 95035 ("City"), and **Backflow Prevention Specialists, Inc.,** a California stock corporation with its principal place of business at **1131 Elko Drive, Sunnyvale, CA 94089** (hereinafter referred to as "Consultant"). City and Consultant are sometimes individually referred to as "Party" and collectively as "Parties" in this Agreement.

RECITALS

A. City is a public agency of the State of California and is in need of professional services for the following project:

Backflow Hazzard Assessment Survey
(hereinafter referred to as "the Project").

B. Consultant is duly licensed and has the necessary qualifications to provide such services.

C. The Parties desire by this Agreement to establish the terms for City to retain Consultant to provide the services described herein.

AGREEMENT

NOW, THEREFORE, IT IS AGREED AS FOLLOWS:

1. Services.

Consultant shall provide the City with the services described in the Scope of Services attached hereto as Exhibit A.

2. Compensation.

a. Subject to paragraph 2(b) below, the City shall pay for such services in accordance with the Schedule of Charges set forth in Exhibit B.

b. In no event shall the total amount paid for services rendered by Consultant under this Agreement exceed the sum of **One Hundred Twenty One Thousand Three Hundred Ninety Four Dollars and Zero Cents ($121,394.00)**. This amount is to cover all printing and related costs, and the City will not pay any additional fees for printing expenses. Periodic payments shall be made within thirty (30) days of receipt of an invoice which includes a detailed description of the work performed. Payments to Consultant for work performed will be made on a monthly billing basis.

3. Additional Work.

If changes in the work seem merited by Consultant or the City, and informal consultations with the other party indicate that a change is warranted, it shall be processed in the following manner: a letter outlining the changes shall be forwarded to the City by Consultant with a statement of estimated changes in fee or time schedule. An amendment to this Agreement shall be prepared by the City and executed by both Parties before performance of such services, or the City will not be required to pay for the changes in

the scope of work. Such amendment shall not render ineffective or invalidate unaffected portions of this Agreement.

4. Maintenance of Records.

Books, documents, papers, accounting records, and other evidence pertaining to costs incurred shall be maintained by Consultant and made available at all reasonable times during the Agreement term and for four (4) years from the date of final payment under the Agreement for inspection by City.

5. Time of Performance.

Consultant shall perform its services in a prompt and timely manner and shall commence performance upon the Effective Date. Consultant shall complete the services required hereunder within **three hundred sixty-five (365) calendar days.**

6. Delays in Performance.

a. Neither City nor Consultant shall be considered in default of this Agreement for delays in performance caused by circumstances beyond the reasonable control of the non-performing party. For purposes of this Agreement, such circumstances include but are not limited to, abnormal weather conditions; floods; earthquakes; fire; epidemics; war; riots and other civil disturbances; strikes, lockouts, work slowdowns, and other labor disturbances; sabotage or judicial restraint.

b. Should such circumstances occur, the non-performing party shall, within a reasonable time of being prevented from performing, give written notice to the other party describing the circumstances preventing continued performance and the efforts being made to resume performance of this Agreement.

7. Compliance with Law.

a. Consultant shall comply with all applicable laws, ordinances, codes and regulations of the federal, state and local government, including Cal/OSHA requirements.

b. If required, Consultant shall assist the City, as requested, in obtaining and maintaining all permits required of Consultant by federal, state and local regulatory agencies.

c. If applicable, Consultant is responsible for all costs of clean up and/ or removal of hazardous and toxic substances spilled as a result of his or her services or operations performed under this Agreement.

8. Standard of Care

Consultant's services will be performed in accordance with generally accepted professional practices and principles and in a manner consistent with the level of care and skill ordinarily exercised by members of the profession currently practicing under similar conditions.

9. Assignment and Subconsultant

Consultant shall not assign, sublet, or transfer this Agreement or any rights under or interest in this Agreement without the written consent of the City, which may be withheld for any reason. Any attempt to so assign or so transfer without such consent shall be void and without legal effect and shall constitute

grounds for termination. Subcontracts, if any, shall contain a provision making them subject to all provisions stipulated in this Agreement. Nothing contained herein shall prevent Consultant from employing independent associates, and subconsultants as Consultant may deem appropriate to assist in the performance of services hereunder.

10. Independent Consultant

Consultant is retained as an independent contractor and is not an employee of City. No employee or agent of Consultant shall become an employee of City. The work to be performed shall be in accordance with the work described in this Agreement, subject to such directions and amendments from City as herein provided.

11. Insurance. Consultant shall not commence work for the City until it has provided evidence satisfactory to the City it has secured all insurance required under Exhibit D (Insurance Requirements), attached hereto and incorporated herein by this reference. In addition, Consultant shall not allow any subcontractor to commence work on any subcontract until it has secured all insurance required therein.

12. Indemnification.

a. To the fullest extent permitted by law, Consultant shall defend (with counsel of City's choosing), indemnify and hold the City, its officials, officers, employees, volunteers, and agents free and harmless from any and all claims, demands, causes of action, costs, expenses, liability, loss, damage or injury of any kind, in law or equity, to property or persons, including wrongful death, in any manner arising out of, pertaining to, or incident to any acts, errors or omissions, or willful misconduct of Consultant, its officials, officers, employees, subcontractors, consultants or agents in connection with the performance of the Consultant's services, the Project or this Agreement, including without limitation the payment of all damages, expert witness fees and attorney's fees and other related costs and expenses. Consultant's obligation to indemnify shall not be restricted to insurance proceeds, if any, received by Consultant, the City, its officials, officers, employees, agents, or volunteers.

b. If Consultant's obligation to defend, indemnify, and/or hold harmless arises out of Consultant's performance of "design professional" services (as that term is defined under Civil Code section 2782.8), then, and only to the extent required by Civil Code section 2782.8, which is fully incorporated herein, Consultant's indemnification obligation shall be limited to claims that arise out of, pertain to, or relate to the negligence, recklessness, or willful misconduct of the Consultant, and, upon Consultant obtaining a final adjudication by a court of competent jurisdiction, Consultant's liability for such claim, including the cost to defend, shall not exceed the Consultant's proportionate percentage of fault.

13. California Labor Code Requirements.

a. Consultant is aware of the requirements of California Labor Code Sections 1720 et seq. and 1770 et seq., which require the payment of prevailing wage rates and the performance of other requirements on certain "public works" and "maintenance" projects ("Prevailing Wage Laws"). If the services are being performed as part of an applicable "public works" or "maintenance" project, as defined by the Prevailing Wage Laws, and if the total compensation is One Thousand Dollars and Zero Cents ($1,000.00) or more, Consultant agrees to fully comply with such Prevailing Wage Laws. Consultant shall defend, indemnify and hold the City, its officials, officers, employees and agents free and harmless from any claims, liabilities, costs, penalties or interest arising out of any failure or alleged failure to comply with the Prevailing Wage Laws. It shall be mandatory upon the Consultant and all subconsultants to comply with all California Labor Code provisions, which include but are not limited to prevailing wages (Labor Code Sections 1771, 1774 and 1775), employment of apprentices (Labor Code Section 1777.5), certified payroll

records (Labor Code Sections 1771.4 and 1776), hours of labor (Labor Code Sections 1813 and 1815) and debarment of contractors and subcontractors (Labor Code Section 1777.1). The requirement to submit certified payroll records directly to the Labor Commissioner under Labor Code section 1771.4 shall not apply to work performed on a public works project that is exempt pursuant to the small project exemption specified in Labor Code Section 1771.4.

b. If the services are being performed as part of an applicable "public works" or "maintenance" project, then pursuant to Labor Code Sections 1725.5 and 1771.1, the Consultant and all subconsultants performing such services must be registered with the Department of Industrial Relations. Consultant shall maintain registration for the duration of the Project and require the same of any subconsultants, as applicable. Notwithstanding the foregoing, the contractor registration requirements mandated by Labor Code Sections 1725.5 and 1771.1 shall not apply to work performed on a public works project that is exempt pursuant to the small project exemption specified in Labor Code Sections 1725.5 and 1771.1.

c. This Agreement may also be subject to compliance monitoring and enforcement by the Department of Industrial Relations. It shall be Consultant's sole responsibility to comply with all applicable registration and labor compliance requirements. Any stop orders issued by the Department of Industrial Relations against Consultant or any subcontractor that affect Consultant's performance of services, including any delay, shall be Consultant's sole responsibility. Any delay arising out of or resulting from such stop orders shall be considered Consultant caused delay and shall not be compensable by the City. Consultant shall defend, indemnify and hold the City, its officials, officers, employees and agents free and harmless from any claim or liability arising out of stop orders issued by the Department of Industrial Relations against Consultant or any subcontractor.

14. Verification of Employment Eligibility.

By executing this Agreement, Consultant verifies that it fully complies with all requirements and restrictions of state and federal law respecting the employment of undocumented aliens, including, but not limited to, the Immigration Reform and Control Act of 1986, as may be amended from time to time, and shall require all subconsultants and sub-subconsultants to comply with the same.

15. City Material Requirements. [Reserved]

16. Laws and Venue.

This Agreement shall be interpreted in accordance with the laws of the State of California. If any action is brought to interpret or enforce any term of this Agreement, the action shall be brought in a state or federal court situated in the County of Santa Clara, State of California.

17 Termination or Abandonment

a. City has the right to terminate or abandon any portion or all of the work under this Agreement by giving ten (10) calendar days written notice to Consultant. In such event, City shall be immediately given title and possession to all original field notes, drawings and specifications, written reports and other documents produced or developed for that portion of the work completed and/or being abandoned. City shall pay Consultant the reasonable value of services rendered for any portion of the work completed prior to termination. If said termination occurs prior to completion of any task for the Project for which a payment request has not been received, the charge for services performed during such task shall be the reasonable value of such services, based on an amount mutually agreed to by City and Consultant of the portion of such task completed but not paid prior to said termination. City shall not be liable for any

costs other than the charges or portions thereof which are specified herein. Consultant shall not be entitled to payment for unperformed services, and shall not be entitled to damages or compensation for termination of work.

b. Consultant may terminate its obligation to provide further services under this Agreement upon thirty (30) calendar days' written notice to City only in the event of substantial failure by City to perform in accordance with the terms of this Agreement through no fault of Consultant.

c. The Consultant understands and accepts that at all times; the Agreement is subject to appropriation of funds by the Milpitas City Council. The Agreement may terminate without penalty, liability or expense of any kind to the City at the end of Agreement term. The City has no obligation to make appropriations for the Agreement in lieu of appropriations for new or other contracts. City budget decisions are subject to the discretion of the Mayor and City Council. Consultant's assumption of risk of possible non-appropriation is a part of the consideration for the Agreement. This section controls against any and all other provisions of the Agreement.

18 Documents. Except as otherwise provided in "Termination or Abandonment," above, all original field notes, written reports, Drawings and Specifications and other documents, produced or developed for the Project shall, upon payment in full for the services described in this Agreement, be furnished to and become the property of the City.

19. Organization

Consultant shall assign **Benjamin Bennett** as Project Manager. The Project Manager shall not be removed from the Project or reassigned without the prior written consent of the City.

20. Limitation of Agreement.

This Agreement is limited to and includes only the work included in the Project described above.

21. Notice

Any notice or instrument required to be given or delivered by this Agreement may be given or delivered by depositing the same in any United States Post Office, certified mail, return receipt requested, postage prepaid, addressed to:

CITY:	CONSULTANT:
City of Milpitas	Backflow Prevention Specialists, Inc.
455 E. Calaveras Boulevard	1131 Elko Drive
Milpitas, California 95035	Sunnyvale, CA 94089
Attn: City Manager	Attn: Benjamin Bennett

and shall be effective upon receipt thereof.

22. Third Party Rights

Nothing in this Agreement shall be construed to give any rights or benefits to anyone other than the City and the Consultant.

23. Equal Opportunity Employment.

Consultant represents that it is an equal opportunity employer and that it shall not discriminate against any employee or applicant for employment because of race, religion, color, national origin, ancestry, sex, age or other interests protected by the State or Federal Constitutions. Such non-discrimination shall include, but not be limited to, all activities related to initial employment, upgrading, demotion, transfer, recruitment or recruitment advertising, layoff or termination.

24. Entire Agreement

This Agreement, with its exhibits, represents the entire understanding of City and Consultant as to those matters contained herein, and supersedes and cancels any prior or contemporaneous oral or written understanding, promises or representations with respect to those matters covered hereunder. Each party acknowledges that no representations, inducements, promises or agreements have been made by any person which are not incorporated herein, and that any other agreements shall be void. This Agreement may not be modified or altered except in writing signed by both Parties hereto. This is an integrated Agreement.

25. Severability

The unenforceability, invalidity or illegality of any provision(s) of this Agreement shall not render the provisions unenforceable, invalid or illegal.

26. Successors and Assigns

This Agreement shall be binding upon and shall inure to the benefit of the successors in interest, executors, administrators and assigns of each party to this Agreement. However, Consultant shall not assign or transfer by operation of law or otherwise any or all of its rights, burdens, duties or obligations without the prior written consent of City. Any attempted assignment without such consent shall be invalid and void.

27. Non-Waiver

None of the provisions of this Agreement shall be considered waived by either party, unless such waiver is specifically specified in writing.

28. Time of Essence

Time is of the essence for each and every provision of this Agreement.

29. City's Right to Employ Other Consultants

City reserves its right to employ other consultants, including engineers, in connection with this Project or other projects.

30. Prohibited Interests

Consultant maintains and warrants that it has not employed nor retained any company or person, other than a bona fide employee working solely for Consultant, to solicit or secure this Agreement. Further, Consultant warrants that it has not paid nor has it agreed to pay any company or person, other than a bona fide employee working solely for Consultant, any fee, commission, percentage, brokerage fee, gift or other consideration contingent upon or resulting from the award or making of this Agreement. For breach or violation of this warranty, City shall have the right to rescind this Agreement without liability. For the term of this Agreement, no director, official, officer or employee of City, during the term of his or her service

with City, shall have any direct interest in this Agreement, or obtain any present or anticipated material benefit arising therefrom.

31. Wage Theft Prevention

a. Consultant, and any subconsultant it employs to complete work under this Agreement, shall comply with all applicable federal, state and local wage and hour laws. Applicable laws may include, but are not limited to, the Federal Fair Labor Standards Act, the California Labor Code and the Milpitas Minimum Wage Ordinance.

b. BY SIGNING THIS AGREEMENT, CONSULTANT AFFIRMS THAT IT HAS DISCLOSED ANY FINAL JUDGMENTS, DECISIONS OR ORDERS FROM A COURT OR INVESTIGATORY GOVERNMENT AGENCY, FINDING IN THE FIVE (5) YEARS PRIOR TO EXECUTING THIS AGREEMENT THAT CONSULTANT OR ITS SUBCONSULTANTS HAS VIOLATED ANY APPLICABLE WAGE AND HOUR LAWS. CONSULTANT FURTHER AFFIRMS THAT IT OR ITS SUBCONSULTANT(S) HAS EITHER FULLY SATISFIED EACH JUDGMENT, DECISION OR ORDER, OR, IF ANY JUDGMENT, DECISION OR ORDER HAS NOT BEEN FULLY SATISFIED, CONSULTANT AFFIRMS THAT IT OR ITS SUBCONSULTANT(S) IS CURRENTLY SATISFYING SAID JUDGMENT, DECISION OR ORDER THROUGH A PAYMENT OR ALTERNATIVE PLAN APPROVED BY THE APPLICABLE COURT/GOVERNMENT AGENCY AND THAT CONSULTANT OR ITS SUBCONSULTANT(S) ARE IN COMPLIANCE WITH SAID PLAN AS OF THE DATE OF EXECUTING THIS AGREEMENT.

c. If at any time during the term of this Agreement, a court or investigatory government agency issues a final judgment, decision or order finding that Consultant or a subconsultant it employs to perform work under this Agreement has violated any applicable wage and hour law, or Consultant learns of such a judgment, decision, or order that was not previously disclosed in its bid/proposal, Consultant shall inform the City no more than fifteen (15) calendar days after the judgment, decision or order becomes final or from the date of learning of the final judgment, decision or order. Consultant or its subconsultant(s) shall, within thirty (30) calendar days after notifying the City, either (i) fully satisfy any such judgment, decision, or order and provide the City with documentary evidence of satisfying said judgment, decision or order; or (ii) provide the City documentary evidence of a payment or other alternative plan approved by the court/government agency to satisfy the judgment, decision or order. If the Consultant or its subconsultant is subject to a payment or other alternative plan, the Consultant or its subconsultant shall continue to submit documentary evidence every thirty (30) calendar days during the term of the Agreement demonstrating continued compliance with the plan until the judgment, decision or order has been fully satisfied.

d. For purposes of this Section, a "final judgment, decision, or order" refers to one for which all appeals have been exhausted or the time period to appeal has expired. Relevant investigatory government agencies include: the United States Department of Labor, the California Division of Labor Standards Enforcement, the City, or any other governmental entity or division tasked with the investigation and enforcement of wage and hour laws.

e. Failure to comply with any part of this Section constitutes a material breach of this Agreement. Such breach may serve as a basis for immediate termination of this Agreement and/or any other remedies available under this Agreement and/or law.

f. Notice provided to the City shall be addressed to: Attention: Finance Director, 455 E. Calaveras Blvd. Milpitas, CA 95035. The Notice provisions of this Section are separate from any other

notice provisions in this Agreement and, accordingly, only notice provided to the above address satisfies the notice requirements in this Section.

[SIGNATURES ON FOLLOWING PAGE]

SIGNATURE PAGE FOR PROFESSIONAL SERVICES AGREEMENT BETWEEN THE CITY OF MILPITAS AND BACKFLOW PREVENTION SPECIALISTS, INC.

IN WITNESS WHEREOF, the Parties have executed this Agreement as of the date first written above.

CITY OF MILPITAS

Approved By:

_____

Ned Thomas, City Manager

_____

Date

Approved As To Form:

_____

Michael Mutalipassi, City Attorney

Approved:

_____

Luz Cofresi-Howe, Finance Director/ Risk Manager

Approved As To Content:

_____

Christian Di Renzo, Public Works Director

BACKFLOW PREVENTION SPECIALISTS, INC.

_____

Signature

_____

Name

_____

Title

_____

Date

EXHIBIT A

Scope of Services

Consultant will provide a CA-NV AWWA Certified Cross-Connection Control Specialist to provide services to City to satisfy the hazard assessment requirements for operation and maintenance of a potable water system pursuant to the rules of the State of California and the City of Milpitas.

Item	Description	Remark
1	Project Site: City of Milpitas- 406 service meters at 303 various locations.	This SOW is for work to be performed at the project site as indicated.
2	Consultant will provide the personnel and work required to assist the OWNER with complying with the rules and requirements of the California State Water Resources Control Board's (CSWRCB) Cross-Connection Control Policy Handbook (CCCPH). Specifically, Consultant will assist with conducting cross-connection surveys, providing documentation of the survey results to protect the public water supply from contamination occurring through backflow.	**Disclaimer**: Codes, laws, statutes and regulations can change without prior notice to the public. This SOW is based upon the current rules and regulations provided by the CALIFORNIA STATE WATER RESOURCES CONTROL BOARD'S CROSS-CONNECTION CONTROL POLICY HANDBOOK JULY 1,2024.
3	Conduct kickoff and monthly meetings to review project status, provide internal quality assurance and quality control, and provide review of documents prior to submittal.	
4	Provide City with detailed schedule of the project to be reviewed, revised, and updated.	
5	Coordinate with the City for access to City tablet and records pertaining to the project.	

6	Provide California-Nevada American Water Works Association (CA-NV AWWA) Certified Cross-Connection Control Specialists to conduct cross-connection hazard assessments per Article 2 Section 3.2.1 of the CCCPH and provide reports to the City.	Hazard assessments shall include consideration of the following: (1) The existence of cross-connections; (2) the type and use of materials handled and present, or likely to be,on the user premises; (3) the degree of piping system complexity and accessibility; (4) access to auxiliary water supplies, pumping systems, or pressure systems; (5) distribution system conditions that increase the likelihood of a backflow event (e.g., hydraulic gradient differences impacted by main breaks and high water demand situations, multiple service connections that may result in flow-through conditions, etc.); (6) user premises accessibility; (7) any previous backflow incidents on the user premises; (8) and the requirements and information provided in the CCCPH.
7	Provide a draft and a final report consisting of a summary of all inspection results and findings and corrective recommendations for City review.	

Outside of Project Scope

Item	Description	Remark
1	Changes to the current rules and regulations	Any changes to work must be submitted as a change order
2	Additional inspections or Cross-Connection inspections which were not identified in the original scope of work.	

EXHIBIT B

Schedule of Charges/Payments

Consultant will invoice City on a monthly cycle. Consultant will include with each invoice a detailed progress report that indicates the amount of budget spent on each task. Consultant will inform City regarding any out-of-scope work being performed by Consultant. This is a time-and-materials Agreement.

Rate Sheet

Item	Frequency	Cost
Regular Time Hourly Rate (Mon-Fri 8am-5pm)	As	$260.00/Hour
Overtime Hourly Rate	As	$390.00/Hour
Double Time Hourly Rate	As	$520.00/Hour
Emergency Calls: all travel & on-site time will be billed at $520.00/hour	As	$520.00/Hour

Contract Price

	Description	Hours	Cost
1	Provide California-Nevada American Water Works Association (CA-NV AWWA) Certified Cross-Connection Control Specialists to conduct cross-connection hazard assessments per Article 2 Section 3.2.1 of the CCPH and provide reports to the Water Supplier	406	**$105,560.00**
2	Additional Services as Needed (15%)	-	**$15,834.00**
Overall Total			**$121,394.00**

Pricing is based upon work being performed during regular time hours

- Non-Travel expenses will be billed at cost plus 20%
- Travel Expenses:
  - Outside of Project Site:
    - City agrees to pay transportation, meals, lodging, and all other costs of any necessary off-site (outside the project site) travel by Consultant's personnel. City will also be charged the hourly rate for the time Consultant's personnel spend travelling. These expenses will be billed at cost.
  - Out of Town Travel:
    - Out of town travel includes travel to/from City's project site where the project is located 100 miles or more from the Consultant's main office in Sunnyvale, CA 94089. City agrees to pay transportation, meals, lodging, and all other costs of any necessary travel by Consultant's personnel travel to/from City's project site. City

will also be charged the hourly rate for the time Consultant's personnel spend travelling. These expenses will be billed at actual cost.

Additional services shall include any service not specifically listed above and agreed by the City and the Consultant. Compensation for additional services shall be by a mutually accepted fixed fee, or on an hourly basis, computed at the actual hourly rates listed in the Rate Sheet above. The Consultant shall obtain City written approval prior to performing any work.

Invoice shall include: description of the work and deliverables, all fee(s), costs, expenses, and other charges claimed with respect to such work and deliverables, and the statement of work number.

EXHIBIT C

Activity Schedule

Item	Description	Deliverable	Delivery Mode	Responsibility	Delivery Due Date
1	Project kickoff workshop with City staff.	Meeting agenda and minutes, kickoff workshop presentation materials, project schedule (updated monthly), proof of	Electronic	Consultant	Within 2 weeks of receiving notice to proceed
2	Conduct monthly meetings to review project status, provide internal quality control, and provide	Meeting agendas and minutes, monthly status reports, invoices, kickoff workshop presentation materials, project schedule	Electronic	Consultant	Monthly
3	Provide City with detailed schedule of the project to be reviewed, revised, and updated	Project Schedule	Electronic	Consultant	Within 2 weeks of initial kickoff meeting
4	Coordinate with the City for access to City records pertaining to the project	Access to City records	Electronic	Consultant/City	Within 2 weeks of initial kickoff meeting
5	Obtain electronic tablet from City and coordinate trainings with City staff	Electronic tablet and training	TBD	Consultant/City	Within 2 weeks of initial kickoff meeting
6	Conduct Hazard Assessment Inspections	Hazard assessment reports	Electronic	Consultant	Within 2 weeks of completion of Phases 4 & 5
7	Provide a draft report consisting of a summary of all inspection results and findings and corrective	Draft hazard assessment summary report	Electronic	Consultant	Within 6 weeks of completion of Phase 6
8	Provide a final report consisting of a summary of all inspection results and findings and corrective	Final hazard assessment summary report	Electronic & Hard Copy	Consultant	Within 2 weeks of completion of Phase 7

EXHIBIT D

INSURANCE REQUIREMENTS

Please refer to the insurance requirements listed below. **Those that have an "X" indicated in the space before the requirement apply to Contractor's or Consultant's Agreement.**

Contractor or Consultant shall procure and maintain for the duration of the Agreement insurance against claims for injuries to persons or damages to property which may arise from or in connection with the performance of the work hereunder and the results of that work by the Contractor or Consultant, its agents, representatives, employees or subcontractors.

Contractor or Consultant shall provide its insurance broker(s)/agent(s) with a copy of these requirements and request that they provide Certificates of Insurance complete with copies of all required endorsements.

Contractor or Consultant shall furnish City with copies of original endorsements affecting coverage required by this Exhibit D. The endorsements are to be signed by a person authorized by that insurer to bind coverage on its behalf. All endorsements and certificates are to be received and approved by City before work commences. City has the right to require Contractor's or Consultant's insurer to provide complete, certified copies of all required insurance policies, including endorsements affecting the coverage required by these specifications.

Commercial General Liability (CGL):

___ Coverage at least as broad as Insurance Services Office ("ISO") Form CG 00 01 covering CGL on an "occurrence" basis, including products and completed operations, property damage, bodily injury and personal and advertising injury with limits no less than $2,000,000.00 per occurrence. If a general aggregate limit applies, either the general aggregate limit shall apply separately to this project/location or the general aggregate limit shall be twice the required occurrence limit.

_X_ Coverage at least as broad as ISO Form CG 00 01 covering CGL on an "occurrence" basis, including products and completed operations, property damage, bodily injury and personal and advertising injury with limits no less than $1,000,000.00 per occurrence. If a general aggregate limit applies, either the general aggregate limit shall apply separately to this project/location or the general aggregate limit shall be twice the required occurrence limit.

___ Coverage at least as broad as ISO Form CG 00 01 covering CGL on an "occurrence" basis, including products and completed operations, property damage, bodily injury and personal and advertising injury with limits no less than $5,000,000.00 per occurrence. If a general aggregate limit applies, either the general aggregate limit shall apply separately to this project/location or the general aggregate limit shall be twice the required occurrence limit.

Automobile Liability:

_X_ Coverage at least as broad as ISO Form Number CA 0001 covering, Code 1 (any auto), of if Contractor or Consultant has no owned autos, Code 8 (hired) and 9 (non-owned), with limits no less than $1,000,000.00 combined single limit for bodily injury and property damage.

___ Coverage at least as broad as ISO Form Number CA 0001 covering, Code 1 (any auto), with limits no less than $5,000,000.00 combined single limit for bodily injury and property damage.

___ Garage keepers' extra liability endorsement to extend coverage to all vehicles in the care, custody and control of the Contractor or Consultant, regardless of where the vehicles are kept or driven.

Professional Liability (Errors and Omissions):

_X_ Insurance appropriates to the Contractor or Consultant's profession, with limit no less than $1,000,000.00 per occurrence or claim, $2,000,000.00 aggregate.

___ (If Design/Build), with limits no less than $1,000,000.00 per occurrence or claim, and $2,000,000.00 policy aggregate.

___ Insurance appropriates to the Contractor or Consultant's profession, with limit no less than _____ per occurrence or claim, _____ aggregate

Workers' Compensation Insurance:

_X_ Insurance as required by the State of California, with Statutory Limits, and Employer's Liability Insurance with limit of no less than $1,000,000.00 per accident for bodily injury or disease. *(Not required if Contractor or Consultant provides written verification it has no employees)*

The Employer's Liability policy shall be endorsed to waive any right of subrogation as respects the City, its elected and appointed officials, officers, attorneys, agents, and employees.

Builder's Risk (Course of Construction):

___ Insurance utilizing an "All Risk" (Special Perils) coverage form, with limits equal to the completed value of the project and no coinsurance penalty provisions. If the project does not involve new or major reconstruction, at the option of the City, an Installation Floater may be acceptable. For such projects, a Property Installation Floater shall be obtained that provides for the improvement, remodel, modification, alteration, conversion or adjustment to existing buildings, structures, processes, machinery and equipment. The Property Installation Floater shall provide property damage coverage for any building, structure, machinery or equipment damaged, impaired, broken, or destroyed during the performance of the Work, including during transit, installation, and testing at the City's site.

Contractor's or Consultant's Pollution Legal Liability:

___ Contractor's or Consultant's pollution legal liability and/or Asbestos Legal Liability and/or Errors and Omissions (if project involves environmental hazards) with limits no less than $1,000,000.00 per occurrence or claim and $2,000,000.00 policy aggregate.

If the Contractor or Consultant maintains higher limits than the minimums shown above, the City requires and shall be entitled to coverage for the higher limits maintained by the Contractor or Consultant. Any available insurance proceeds in excess of the specified minimum limits of insurance and coverage shall be available to City.

Cyber Liability Insurance

___ Cyber Liability Insurance with limits not less than $1,000,000 per claim.

Coverage shall be sufficiently broad to respond to the duties and obligations as is undertaken by Contractor or Consultant in this Agreement and shall include, but not be limited to, claims involving infringement of intellectual property, including but not limited to infringement of copyright, trademark, trade dress, invasion of privacy violations, information theft, damage to or destruction of electronic information, release of private information, alteration of electronic information, extortion, and network security.

The policy shall provide coverage for breach response costs as well as regulatory fines and penalties, and credit monitoring expenses with limits sufficient to respond to these obligations.

Surety Bonds:

Contractor shall provide the following Surety Bonds:

____ Bid Bond
____ Performance Bond
____ Payment Bond

The Payment Bond and Performance Bond shall be in a sum equal to the contract price. Bonds shall be duly executed by a responsible corporate surety, authorized to issue such bonds in the State of California and secured through an authorized agent with an office in California.

Other Insurance Provisions:

The insurance policies are to contain, or be endorsed to contain the following provisions:

_X_ Additional Insured Status and Primary/Non-Contributory Language:

Contractor's general liability and automobile liability policies shall be primary and shall not seek contribution from the City's coverage and be endorsed to add the City and its elected and appointed officials, officers, attorneys, agents employees and volunteers as additional insureds under such policies using Insurance Services Office form CG 20 10 (or equivalent) on the general liability policy. For construction projects, an endorsement providing completed operations coverage for the additional insured on the general liability policy, ISO form CG 20 37 (or equivalent), is also required.

The limits of insurance required in this Agreement may be satisfied by a combination of primary and umbrella or excess insurance. Any umbrella or excess insurance shall contain or be endorsed to contain a provision that such coverage shall also apply on a primary and non-contributory basis for the benefit of City (if agreed to in a written contract or agreement) before the City's own insurance or self-insurance shall be called upon to protect it as a named insured.

___ Loss Payee Status – Builder's Risk/Course of Construction Insurance (applicable to Construction Contracts only)

Contractor or Consultant may submit evidence of Builder's Risk insurance in the form of Course of Construction coverage. Such coverage shall name the City as a loss payee as their interest may appear.

_X_ Notice of Cancellation, Suspension or Otherwise Voiding Policies:

Each insurance policy required above shall contain or be endorsed to contain that coverage shall not be suspended, voided, canceled or reduced in coverage or in limits except with thirty (30) days' prior written notice by certified mail, return receipt requested to the City.

_X_ Waiver of Subrogation:

Contractor or Consultant hereby grants to City a waiver of any right to subrogation which any insurer of said Contractor or Consultant may acquire against the City by virtue of the payment of any loss under such insurance. Contractor or Consultant agrees to obtain any endorsement that may be necessary to affect this waiver of subrogation, but this provision applies regardless of whether or not the City has received a waiver of subrogation endorsement from the insurer. The Workers' Compensation Policy shall be endorsed with a waiver of subrogation in favor of the City for all work performed by Contractor or Consultant, its employees, agents and subcontractors.

___ Completed Operations

For Construction Agreements, Contractor shall maintain insurance as required by this Agreement to the fullest amount allowed by law and shall maintain insurance for a minimum of five (5) years following the completion of this project. In the event Contractor fails to obtain or maintain completed operations coverage as required by this Agreement, the City at its sole discretion may purchase the coverage required and the cost will be paid by Contractor.

THE FOLLOWING PROVISIONS APPLY TO ALL AGREEMENTS

Deductibles and Self-Insured Retentions ("SIR"):

Any deductibles or self-insured retentions must be declared to and approved by City. The City may require the Contractor or Consultant to purchase coverage with a lower deductible or retention or provide proof of ability to pay losses and related investigations, claim administration, and defense expenses within the retention. At the option of the City, either (1) the insurer shall reduce or eliminate such deductibles or self-insured retentions as respects the City, its elected and appointed officials, officers, attorneys, agents, and employees; or (2) the Contractor or Consultant shall procure a bond guaranteeing payment of losses and related investigations, claim administration and defense expenses.

All SIRs must be disclosed to Risk Management for approval and shall not reduce the limits of liability.

Policies containing any SIR provision shall provide or be endorsed to provide that the SIR may be satisfied by either the named insured or the City.

City reserves the right to obtain a full-certified copy of any insurance policy and endorsements. Failure to exercise this right shall not constitute a waiver of right to exercise later.

Acceptability of Insurers:

Insurance is to be placed with insurers with a current A.M. Best's rating of no less than A-:VII, unless otherwise acceptable to City.

Claims Made Policies: (note - should be applicable only to professional liability, see below)

1. The Retroactive Date must be shown and must be before the date of the contract or the beginning of contract work.

2. Insurance must be maintained, and evidence of insurance must be provided for at least five (5) years after completion of contract of work.

3. If coverage is canceled or non-renewed, and not replaced with another claims-made policy form with a Retroactive Date prior to the contract effective date, the Contractor or Consultant must purchase "extended reporting" coverage for a minimum of five (5) years after completion of work.

4. A copy of the claims reporting requirements must be submitted to the City for review.

5. If the services involve lead-based paint or asbestos identification/remediation, the Contractor's Pollution Liability Policy shall not contain lead-based paint or asbestos exclusions. If the services involve mold identification/remediation, the Contractors Pollution Liability Policy shall not contain a mold exclusion, and the definition of Pollution shall include microbial matter, including mold.

Subcontractors:

Contractor or Consultant shall require and verify that all subcontractors maintain insurance meeting all the requirements stated herein, and Contractor shall ensure that City is an additional insured on insurance required from subcontractors.

Subcontractor agrees to be bound to Contractor and City in the same manner and to the same extent as Contractor is bound to City under this Agreement and any other contract documents. Subcontractor further agrees to include the same requirements and provisions of this Agreement, including the indemnity and insurance requirements, with any sub-subcontractor to the extent they apply to the scope of the sub-subcontractor's work. A copy of the City indemnity and insurance provisions will be furnished to the subcontractor upon request.

Verification of Coverage:

Contractor or Consultant shall furnish the City with original certificates and amendatory endorsements or copies of the applicable policy language effecting coverage required by this clause. All certificates and endorsements are to be received and approved by the City before work commences. However, failure to obtain the required documents prior to the work beginning shall not waive the Contractor or Consultant's obligation to provide them. The City reserves the right to require complete, certified copies of all required insurance policies, including endorsements required by these specifications, at any time.

Special Risks or Circumstances

City reserves the right to modify these requirements, including limits, based on the nature of the risk, prior experience, insurer, coverage or other special circumstances.

Failure to Comply:

Each insurance policy required above shall contain or be endorsed to contain that any failure to comply with reporting provisions of the policies shall not affect coverage provided to the City, its elected and appointed officials, officers, attorneys, agents, and employees.

Applicability of Coverage:

Each insurance policy required above shall contain or be endorsed to contain that the Contractor's or Consultant's insurance shall apply separately to each insured against whom claim is made or suit is brought, except with respect to the limits of the insurer's liability.

CITY OF MILPITAS
AGENDA REPORT
(AR)

Item Title:	**Consider Fee Waiver Requests from the Samuel Ayer High School Alumni Association, Rotary Club of Milpitas, and LEAD Filipino, and a Donation to the Sunnyhills Neighborhood Association (Staff Contact: Renee Lorentzen, Recreation and Community Services Director, 408-586-3409)**
Category:	Consent Calendar-Community Services and Sustainable Infrastructure
Meeting Date:	5/21/2024
Recommendation	(1) Approve a fee waiver of $1,500.00 for the Samuel Ayer High School 24th Annual Reunion at Murphy Park on September 21, 2024; (2) Approve a fee waiver of $522.50 for the Rotary Club of Milpitas Fundraiser "A Rose for You" on May 19, 2024; (3) Approve a fee waiver of $93.00 for the LEAD Filipino Yoga event at Delano Manongs Park Filed on June 9, 2024; and (4) Approve a donation of $500.00 for the Sunnyhills Neighborhood Association Milpitas Juneteenth 2024 event at Sunnyhills Albert Augustine, Jr. Memorial Park on June 15, 2024.

BACKGROUND:

On April 17, 2024, staff received a Donation and Fee Waiver/Reduction Policy request from the Samuel Ayer High School Alumni Association for their 24th Annual All Class Reunion Picnic on Saturday, September 21, 2024, at Murphy Park. The request is for a $1,500 fee waiver for the Murphy Park Open Space fees.

On May 8, 2024, staff received a Donation and Fee Waiver/Reduction Policy request from the Sunnyhills Neighborhood Association for their Milpitas Juneteenth 2024 event at Sunnyhills Albert Augustine Jr. Memorial Park on June 15, 2024. The request is for a $500 donation for event equipment costs.

On May 10, 2024, staff received a Donation and Fee Waiver/Reduction Policy request from the Milpitas Rotary Club for their *A Rose for You* Fundraiser on Sunday, May 19, 2024, at the Milpitas Senior Center. The request is for a $522.50 fee waiver for the hourly rental fees.

On May 10, 2024, staff received a Donation and Fee Waiver/Reduction Policy request from LEAD Filipino for their Yoga in the Park event on Sunday, June 9, 2024, at Delano Manongs Park Field. The request is for a $93 fee waiver for the hourly rental fees.

ANALYSIS:

Four Donation and Fee Waiver/Reduction request applications were received by the Recreation and Community Services Department. Applications included three (3) requests for fee waivers and one (1) request for a donation.

Fee Waiver Requests

Samuel Ayer High School Alumni Association submitted the required applications and documentation for the 24th Annual All Class Reunion Picnic:

- Indoor Space Rental Application for Milpitas Community Center Auditorium
- City Council Donation and Fee Waiver/Reduction Policy request
- Non-profit status letter

Samuel Ayer High School Alumni Association is requesting the City Council waive eligible fees for the Open Space fee for Murphy Park in the amount of $1,500. Fees ineligible for waiver include the rental application fee

of $30 and refundable security/damage deposit of $1,000. Refundable security/damage deposits are refunded within 30 days of the rental.

The Rotary Club of Milpitas submitted the required applications and documentation for the A Rose for You Fundraiser:

- Indoor Space Rental Application for Milpitas Community Center Auditorium
- City Council Donation and Fee Waiver/Reduction Policy request
- Non-profit status letter

The Rotary Club of Milpitas is requesting the City Council waive eligible fees for the hourly rental rate for the Milpitas Senior Center Community Room in the amount of $522.50. Fees ineligible for waiver include the rental application fee of $30 and refundable security/damage deposit of $1,000. Refundable security/damage deposits are refunded within 30 days of the rental.

LEAD Filipino submitted the required applications and documentation for the Yoga Event:

- Outdoor Space Rental Application for Delano Manongs Park Field
- City Council Donation and Fee Waiver/Reduction Policy request
- Non-profit status letter

LEAD Filipino is requesting that the City Council waive eligible fees for the hourly rental rate for the field at Delano Manongs Park in the amount of $93. Fees ineligible for waiver include the rental application fee of $30 and refundable security/damage deposit of $750. Refundable security/damage deposits are refunded within 30 days of the rental.

Donation
The Sunnyhills Neighborhood Association submitted their required application and documentation for their Milpitas Juneteenth 2024 event:

- City Council Donation and Fee Waiver/Reduction Policy request
- Non-profit status letter

Milpitas City Council adopted an updated “City Council Donation and Fee Waiver/Reduction Policy” on June 21, 2022. Per the policy, eligible organizations can request City fees to be waived up to $1,500 or a donation amount up to $500 to be granted upon request. Eligible organizations are defined as “a non-profit organization as described by the Internal Revenue Section such as 501(c)(3) or an intergovernmental agency; Non-discriminatory, and non-political in nature.” Fee Waiver or Donation requests for events must provide a community benefit within the City of Milpitas proper. Applying organizations must provide proof of non-profit status from the federal Internal Revenue Service or the state Franchise Tax Board.

As required, Samuel Ayer High School Alumni Association,the Sunnyhills Neighborhood Association, LEAD Filipino, and The Rotary Club of Milpitas have provided copies of their respective determination letters from the Internal Revenue Service stating they are tax-exempt organizations. All applicants meet the requirements as outlined in the Council-adopted Donation and Fee Waiver/Reduction Policy.

POLICY ALTERNATIVE(S):
Alternative: Do not approve any one or combination of received fee waivers and donation applications as requested.
Pros: The City’s General Fund will not incur the costs of the fees waived.
Con: Denial of the request may not allow the non-profit organization to hold their events.
Reason not recommended: This request is consistent with the Council-approved Policy.

FISCAL IMPACT:
$25,000 was approved and included in the FY 2023-24 City budget for City Council’s Unallocated Community Promotions with a current balance of $18,355. If these requests are approved by the City Council, then $15,739.50 would remain in that line item of the current year’s budget.

CALIFORNIA ENVIRONMENTAL QUALITY ACT (CEQA):
The action is an organizational or administrative activity of the City government that will not result in direct or indirect physical changes in the environment and is not a project pursuant to Cal. Code of Regs., tit. 14, § 15378.

RECOMMENDATION:
(1) Approve a fee waiver of $1,500.00 for the Samuel Ayer High School 24th Annual Reunion at Murphy Park on September 21, 2024; (2) Approve a fee waiver of $522.50 for the Rotary Club of Milpitas Fundraiser "A Rose for You" on May 19, 2024; (3) Approve a fee waiver of $93.00 for the LEAD Filipino Yoga event at Delano Manongs Park Filed on June 9, 2024; and (4) Approve a donation of $500.00 for the Sunnyhills Neighborhood Association Milpitas Juneteenth 2024 event at Sunnyhills Albert Augustine, Jr. Memorial Park on June 15, 2024.

Attachment(s):
(a) Samuel Ayer High School Alumni Association Application
(b) Samuel Ayer High School Alumni Association Internal Revenue Service (IRS) non-profit letter
(c) Rotary Club of Milpitas Application
(d) Rotary Club of Milpitas Internal Revenue Service (IRS) non-profit letter
(e) LEAD Filipino Application
(f) LEAD Filipino Internal Revenue Services (IRS) non-profit letter
(g) Sunnyhills Neighborhood Association Application
(h) Sunnyhills Neighborhood Association Internal Revenue Service (IRS) non-profit letter

#24

Name of Organization	Samuel Ayer High School Alumni Association
Is there a Milpitas Branch or Affiliation?	- Yes
Organization Address (as listed on your 501 (c) 3)	1957 Old Calaveras Rd Milpitas, CA 95035 United States
Organization Web Site	https://myevent.com/sahsalumniAssociation
Organization Contact Name	Jacob Abeytia
Organization Contact Phone	[redacted]
Organization Contact Email	[redacted]
Request Type	- Fee Waiver (up to $1,500)
Requested Amount (request types cannot be combined or exceed maximum listed amounts)	$1500
Description of Use of Funds/Fees to be Waived	Offset expenses
Event Name	24th Annual All Class Reunion Picnic
Event Date(s)	Sep 21, 2024
Event Location (Facility Name and Address)	Murphy Park, Yellowstone Ave, Milpitas
Is your Event Open to the Public	Yes
What is you anticipated Event attendance?	250+

What is the purpose of the Event?
This is the annual reunion picnic for all classes and alumni from 1958-1981. People who grew up and attended Samuel Ayer High School return to their beloved Milpitas to renew friendships and reacquaint themselves with friend and the community. Last year's attendance topped 250 persons.

What percentage of your event fundraising proceeds will benefit the Milpitas Community?	60% or more

How will the Milpitas Community Benefit from this Event?
There is a great economic impact for the City. Many attendees travel from out of the area and stay at local hotels and eat at local restaurants. Although the picnic is on Saturday, many of the attendees will make a 4 day stay in Milpitas.

How will the City's contribution (if approved) be recognized in event media and publicity?
Press release, Association Newsletter, Banners and announcements at the event.

Website is under construction.

Upload your Entity Status Letter (Entity Name listed on this application must match the Entity Status Letter Name)	Spring 2024 Newsletter.docx City of Milpitas Banner.pdf

Within 60 days after completion of the event for which a donation was received or a fee waiver was granted by the City of Milpitas, your organization will provide a report to the Director of Recreation and Community Services to include at minimum: number of participants, copies of all publicity of the event, any benefit to the community, amount of funds raised and an accounting of how the proceeds of the event will be dispersed.

Failure to abide by the rules and procedures set forth in the City Council Donation/Fee Waiver

Policy will result in the organization being denied for funding and/or fee waiver in the future. Draw your signature into the box below.

Jacob P Abeytia

Department of the Treasury
Internal Revenue Service
Tax Exempt and Government Entities
P.O. Box 2508
Cincinnati, OH 45201

Date:
04/19/2023
Employer ID number:
[redacted]
Person to contact:
Name: Customer Service
ID number: 31954
Telephone: 877-829-5500
Accounting period ending:
December 31
Public charity status:
509(a)(2)
Form 990 / 990-EZ / 990-N required:
Yes
Effective date of exemption:
December 9, 2022
Contribution deductibility:
Yes
Addendum applies:
No
DLN:
26053503003983

SAMUEL AYER HIGH SCHOOL ALUMNI
ASSOCIATION
C/O JACOB P ABEYTIA
1975 OLD CALAVERAS RD
MILPITAS, CA 95035

Dear Applicant:

We're pleased to tell you we determined you're exempt from federal income tax under Internal Revenue Code (IRC) Section 501(c)(3). Donors can deduct contributions they make to you under IRC Section 170. You're also qualified to receive tax deductible bequests, devises, transfers or gifts under Section 2055, 2106, or 2522. This letter could help resolve questions on your exempt status. Please keep it for your records.

Organizations exempt under IRC Section 501(c)(3) are further classified as either public charities or private foundations. We determined you're a public charity under the IRC Section listed at the top of this letter.

If we indicated at the top of this letter that you're required to file Form 990/990-EZ/990-N, our records show you're required to file an annual information return (Form 990 or Form 990-EZ) or electronic notice (Form 990-N, the e-Postcard). If you don't file a required return or notice for three consecutive years, your exempt status will be automatically revoked.

If we indicated at the top of this letter that an addendum applies, the enclosed addendum is an integral part of this letter.

For important information about your responsibilities as a tax-exempt organization, go to www.irs.gov/charities. Enter "4221-PC" in the search bar to view Publication 4221-PC, Compliance Guide for 501(c)(3) Public Charities, which describes your recordkeeping, reporting, and disclosure requirements.

Sincerely,

Stephen A. Martin
Director, Exempt Organizations
Rulings and Agreements

#27

Name of Organization	The Rotary Club of Milpitas
Is there a Milpitas Branch or Affiliation?	- Yes
Organization Address (as listed on your 501 (c) 3)	P.O. Box 360167 Milpitas, CA 95035 United States
Organization Web Site	http://milpitasrotary.org
Organization Contact Name	Paul Ellis
Organization Contact Phone	[redacted]
Organization Contact Email	[redacted]
Request Type	- Fee Waiver (up to $1,500)
Requested Amount (request types cannot be combined or exceed maximum listed amounts)	522.50
Description of Use of Funds/Fees to be Waived	Facility rental, Senior Center Community Room
Event Name	Milpitas Rotary Fundraiser (A Rose for You)
Event Date(s)	May 19, 2024
Event Location (Facility Name and Address)	Milpitas Senior Center, 40 N Milpitas Blvd.
Is your Event Open to the Public	Yes
What is you anticipated Event attendance?	100-125

What is the purpose of the Event?
Raise money to support The Rotary Club of Milpitas programs that benefit our community.

Is your event a Fundraiser	Yes
What percentage of your event fundraising proceeds will benefit the Milpitas Community?	60% or more

How will the Milpitas Community Benefit from this Event?
The Milpitas Rotary is a service organization dedicated to helping improve the lives of others. We support our community through donations to organizations and programs that provide financial or physical assistance to The Milpitas Unified School District scholarship programs, Youth club programs such as Science Olympiad, Speech Contest, Hope for the Unhoused, Milpiatas Community Education Foundation, and many others.

How will the City's contribution (if approved) be recognized in event media and publicity?
The city facility is recognized in our promotion flyer, will be mentioned in our welcome comments and identified in our program.

Upload your Entity Status Letter (Entity Name listed on this application must match the Entity Status Letter Name)	CA AG Registration_Rotary Militas_20240510.pdf

Within 60 days after completion of the event for which a donation was received or a fee waiver was granted by the City of Milpitas, your organization will provide a report to the Director of Recreation and Community Services to include at minimum: number of participants, copies of all publicity of the event, any benefit to the community, amount of funds raised and an accounting of how the proceeds of the event will be dispersed.

Failure to abide by the rules and procedures set forth in the City Council Donation/Fee Waiver

Policy will result in the organization being denied for funding and/or fee waiver in the future. Draw your signature into the box below.	Paul Ellis

State of California
Department of Justice

Office of the
Attorney General

HOME ABOUT MEDIA CAREERS REGULATIONS RESOURCES PROGRAMS CONTACT

Registrant Details

Entity type: Corporate Class as registered with the Secretary of State or based on founding & registration documents.

Organization Name:	ROTARY CLUB MILPITAS	**IRS FEIN:**	[redacted]
Entity Type:		**SOS/FTB Corporate/Organization Number:**	9772473

Registry Status:	Current	**Renewal Due/Exp. Date:**	11/15/2024
RCT Registration Number:	030463	**Issue Date:**	6/30/2006
Record Type:	Charity Registration	**Effective Date:**	6/30/2006
Date of Last Renewal:	1/10/2024	**DBA:**	

Mailing Address

Street:	PO BOX 360167
Street Line 2:	
City, State Zip:	MILPITAS CA 95036-0167

Filings & Correspondence

Return Check Notice 2010	Return Check Notice 2010
Miscellaneous Document	Miscellaneous Document
Incomplete RRF-1 Notice 2011	Incomplete RRF-1 Notice 2011
Founding Documents	Founding Documents
CT-550 2009	CT-550 2009
Renewal Filing	2023
Renewal Filing	2022
Renewal Filing	2021
Renewal Filing	2020
Form RRF-1	2019
Renewal Filing	2018
Form RRF-1	2017
2016 RRF-1	2016 RRF-1
RRF-1 2014	2014 RRF-1
RRF-1 2013	2013 RRF-1
RRF-1 2012	2012 RRF-1
RRF-1 2011	2011 RRF-1
RRF-1 2010	2010 RRF-1
IRS Form 990-EZ 2010	2010 IRS Form 990-EZ
IRS Form 990-EZ 2010	2010 IRS Form 990-EZ
IRS Form 990-EZ 2010	2010 IRS Form 990-EZ
RRF-1 2009	2009 RRF-1
IRS Form 990-EZ 2009	2009 IRS Form 990-EZ
RRF-1 2008	2008 RRF-1

RRF-1 2007	2007 RRF-1
IRS Form 990 2007	2007 IRS Form 990
RRF-1 2006	2006 RRF-1
IRS Form 990 2006	2006 IRS Form 990
RRF-1 2005	2005 RRF-1
IRS Form 990 2005	2005 IRS Form 990
IRS Form 990 2004	2004 IRS Form 990
RRF-1 2003	2003 RRF-1
IRS Form 990 2003	2003 IRS Form 990
RRF-1 2002	2002 RRF-1
IRS Form 990 2002	2002 IRS Form 990
RRF-1 2001	2001 RRF-1
IRS Form 990 2001	2001 IRS Form 990
RRF-1 2000	2000 RRF-1
IRS Form 990 2000	2000 IRS Form 990

Annual Renewal Data

Status of Filing:	Accepted
Accounting Period Begin Date:	7/1/2009
Accounting Period End Date:	6/30/2010
Filing Received Date:	2/16/2011
Form RRF-1 Reject/Incomplete Reason:	
Form CT-TR-1 Reject/Incomplete Reason:	
IRS Form 990 Reject/Incomplete Reason:	
Notes From Registry Staff:	

Status of Filing:	Accepted
Accounting Period Begin Date:	7/1/2010
Accounting Period End Date:	6/30/2011
Filing Received Date:	2/10/2012
Form RRF-1 Reject/Incomplete Reason:	
Form CT-TR-1 Reject/Incomplete Reason:	
IRS Form 990 Reject/Incomplete Reason:	
Notes From Registry Staff:	

Status of Filing:	Accepted
Accounting Period Begin Date:	7/1/2011
Accounting Period End Date:	6/30/2012
Filing Received Date:	11/20/2012
Form RRF-1 Reject/Incomplete Reason:	
Form CT-TR-1 Reject/Incomplete Reason:	
IRS Form 990 Reject/Incomplete Reason:	
Notes From Registry Staff:	

Status of Filing:	Accepted
Accounting Period Begin Date:	7/1/2012
Accounting Period End Date:	6/30/2013
Filing Received Date:	11/18/2013
Form RRF-1 Reject/Incomplete Reason:	
Form CT-TR-1 Reject/Incomplete Reason:	
IRS Form 990 Reject/Incomplete Reason:	
Notes From Registry Staff:	

Status of Filing:	Accepted
Accounting Period Begin Date:	7/1/2013
Accounting Period End Date:	6/30/2014
Filing Received Date:	11/7/2014

Form RRF-1 Reject/Incomplete Reason:
Form CT-TR-1 Reject/Incomplete Reason:
IRS Form 990 Reject/Incomplete Reason:
Notes From Registry Staff:

Status of Filing:	Accepted
Accounting Period Begin Date:	7/1/2014
Accounting Period End Date:	6/30/2015
Filing Received Date:	9/2/2015
Form RRF-1 Reject/Incomplete Reason:	
Form CT-TR-1 Reject/Incomplete Reason:	
IRS Form 990 Reject/Incomplete Reason:	
Notes From Registry Staff:	

Status of Filing:	Accepted
Accounting Period Begin Date:	7/1/2015
Accounting Period End Date:	6/30/2016
Filing Received Date:	12/8/2016
Form RRF-1 Reject/Incomplete Reason:	
Form CT-TR-1 Reject/Incomplete Reason:	
IRS Form 990 Reject/Incomplete Reason:	
Notes From Registry Staff:	

Status of Filing:	Accepted
Accounting Period Begin Date:	7/1/2016
Accounting Period End Date:	6/30/2017
Filing Received Date:	11/8/2017
Form RRF-1 Reject/Incomplete Reason:	
Form CT-TR-1 Reject/Incomplete Reason:	
IRS Form 990 Reject/Incomplete Reason:	
Notes From Registry Staff:	

Status of Filing:	Accepted
Accounting Period Begin Date:	7/1/2017
Accounting Period End Date:	6/30/2018
Filing Received Date:	11/30/2018
Form RRF-1 Reject/Incomplete Reason:	
Form CT-TR-1 Reject/Incomplete Reason:	
IRS Form 990 Reject/Incomplete Reason:	
Notes From Registry Staff:	

Status of Filing:	Accepted
Accounting Period Begin Date:	7/1/2018
Accounting Period End Date:	6/30/2019
Filing Received Date:	11/15/2019
Form RRF-1 Reject/Incomplete Reason:	
Form CT-TR-1 Reject/Incomplete Reason:	
IRS Form 990 Reject/Incomplete Reason:	
Notes From Registry Staff:	

Status of Filing:	Accepted
Accounting Period Begin Date:	7/1/2019
Accounting Period End Date:	6/30/2020
Filing Received Date:	10/25/2022
Form RRF-1 Reject/Incomplete Reason:	
Form CT-TR-1 Reject/Incomplete Reason:	
IRS Form 990 Reject/Incomplete Reason:	
Notes From Registry Staff:	

Status of Filing:	Accepted
Accounting Period Begin Date:	7/1/2020
Accounting Period End Date:	6/30/2021
Filing Received Date:	9/9/2021
Form RRF-1 Reject/Incomplete Reason:	
Form CT-TR-1 Reject/Incomplete Reason:	

IRS Form 990 Reject/Incomplete Reason:	
Notes From Registry Staff:	

Status of Filing:	Accepted
Accounting Period Begin Date:	7/1/2021
Accounting Period End Date:	6/30/2022
Filing Received Date:	10/25/2022
Form RRF-1 Reject/Incomplete Reason:	
Form CT-TR-1 Reject/Incomplete Reason:	
IRS Form 990 Reject/Incomplete Reason:	
Notes From Registry Staff:	

Status of Filing:	Accepted
Accounting Period Begin Date:	7/1/2022
Accounting Period End Date:	6/30/2023
Filing Received Date:	11/14/2023
Form RRF-1 Reject/Incomplete Reason:	
Form CT-TR-1 Reject/Incomplete Reason:	
IRS Form 990 Reject/Incomplete Reason:	
Notes From Registry Staff:	

Related Registrations & Event Reports

The related records shown below depend on the record type being viewed:

- Charity Registrations relate to Professional Fundraising Events which relate to Professional Fundraiser Registrations.
- Raffle Registrations relate to Raffle Reports.
- Click on the **RCT Registration No** to navigate to the related record.

No Related Records

City of Milpitas City Council Non-Profit Donation/Fee Waiver Requ... #28

Name of Organization	LEAD Filipino
Is there a Milpitas Branch or Affiliation?	✔ Yes
Organization Address (as listed on your 501 (c) 3)	38 S Second St San Jose, CA 95113 United States
Organization Web Site	http://leadfilipino.org/
Organization Contact Name	Jennifer Cayanan
Organization Contact Phone	[redacted]
Organization Contact Email	[redacted]
Request Type	✔ Fee Waiver (up to $1,500)
Requested Amount (request types cannot be combined or exceed maximum listed amounts)	$1500
Description of Use of Funds/Fees to be Waived	Used for fee waiver for park permits, open space permit and fees to use park
Event Name	Yoga in the Park
Event Date(s)	Jun 09, 2024
Event Location (Facility Name and Address)	1650 Delano Manong Park, McCandless Dr, Milpitas, CA 95035
Is your Event Open to the Public	Yes
What is you anticipated Event attendance?	30

What is the purpose of the Event?
The purpose of the event is to provide a free physical education class (yoga) to the Milpitas residents, specifically targeting the Filipinx/a/o Community.

Is your event a Fundraiser	No
What percentage of your event fundraising proceeds will benefit the Milpitas Community?	None, this is not a fundraiser

How will the Milpitas Community Benefit from this Event?
In Milpitas, we serve over 11 thousand Filipinos, and in a Santa Clara County Health Assessment done in 2017, it was noted Filipinos had

the lowest rates of Physical activity among all other Asian American and Pacific Islander subgroups. At LEAD Filipino we want to tackle this issue head-on and provide free opportunities for Filipinx/a/os and other Milpitas community members to participate in exercise activities that will not only foster healthy living attitudes but community building.

How will the City's contribution (if approved) be recognized in event media and publicity?
We will include the City of Milpitas contribution by stating it on our social media flyers promoting the event, on our Eventbrite, and on our completed post-event social media post after the event using the line "This event made possible, in part, by the City of Milpitas."

Upload your Entity Status Letter (Entity Name listed on this application must match the Entity Status Letter Name)	1.IRS Determination Letter (1).pdf
Within 60 days after completion of the event for which a donation was received or a fee waiver was granted by the City of Milpitas, your organization will provide a report to the Director of Recreation and Community Services to include at minimum: number of participants, copies of all publicity of the event, any benefit to the community, amount of funds raised and an accounting of how the proceeds of the event will be dispersed. Failure to abide by the rules and procedures set forth in the City Council Donation/Fee Waiver Policy will result in the organization being denied for funding and/or fee waiver in the future. Draw your signature into the box below.	

Entry Info

Date Created	10 May 2024 - 09:57:54 AM
Date Updated	
IP Address	198.27.222.105

Department of the Treasury
Internal Revenue Service
Tax Exempt and Government Entities
P.O. Box 2508
Cincinnati, OH 45201

Date:
04/17/2021
Employer ID number:
[redacted]
Person to contact:
Name: Customer Service
ID number: 31954
Telephone: (877) 829-5500
Accounting period ending:
December 31
Public charity status:
509(a)(2)
Form 990 / 990-EZ / 990-N required:
Yes
Effective date of exemption:
August 11, 2020
Contribution deductibility:
Yes
Addendum applies:
No
DLN:
26053742004420

LEAD FILIPINO
C/O ANGELICA CORTEZ
991 WEST HEDDING STREET NO 202
SAN JOSE, CA 95126-1248

Dear Applicant:

We're pleased to tell you we determined you're exempt from federal income tax under Internal Revenue Code (IRC) Section 501(c)(3). Donors can deduct contributions they make to you under IRC Section 170. You're also qualified to receive tax deductible bequests, devises, transfers or gifts under Section 2055, 2106, or 2522. This letter could help resolve questions on your exempt status. Please keep it for your records.

Organizations exempt under IRC Section 501(c)(3) are further classified as either public charities or private foundations. We determined you're a public charity under the IRC Section listed at the top of this letter.

If we indicated at the top of this letter that you're required to file Form 990/990-EZ/990-N, our records show you're required to file an annual information return (Form 990 or Form 990-EZ) or electronic notice (Form 990-N, the e-Postcard). If you don't file a required return or notice for three consecutive years, your exempt status will be automatically revoked.

If we indicated at the top of this letter that an addendum applies, the enclosed addendum is an integral part of this letter.

For important information about your responsibilities as a tax-exempt organization, go to www.irs.gov/charities. Enter "4221-PC" in the search bar to view Publication 4221-PC, Compliance Guide for 501(c)(3) Public Charities, which describes your recordkeeping, reporting, and disclosure requirements.

Sincerely,

Stephen A. Martin

Stephen A. Martin
Director, Exempt Organizations
Rulings and Agreements

#26

Name of Organization	Sunnyhills Neighborhood Association
Is there a Milpitas Branch or Affiliation?	- Yes
Organization Address (as listed on your 501 (c) 3)	[redacted] Milpitas, Ca 95035 United States
Organization Web Site	https://sunnyhillsneighborhood.org/
Organization Contact Name	Rob Means
Organization Contact Phone	[redacted]
Organization Contact Email	
Request Type	- Donation (up to $500)
Requested Amount (request types cannot be combined or exceed maximum listed amounts)	$500
Description of Use of Funds/Fees to be Waived	Donation will be used to contribute to cost of the stage. City of Milpitas stage is broken and we have to rent one this year. Last year Cultural Arts grant included the stage.
Event Name	Milpitas Juneteenth 2024
Event Date(s)	Jun 15, 2024
Event Location (Facility Name and Address)	Albert Augustine Sunnyhills Park
Is your Event Open to the Public	Yes
What is you anticipated Event attendance?	300

What is the purpose of the Event?
Recognize the purpose and historical significance of the Juneteenth holiday in America. Celebrate the cultural diversity, and contributions of the African Ancestry community within the City of Milpitas.

Is your event a Fundraiser	No
What percentage of your event fundraising proceeds will benefit the Milpitas Community?	60% or more

How will the Milpitas Community Benefit from this Event?
This community building event event will continue to increase cultural awareness, share history of Juneteenth, celebrate diversity, equity, inclusion and belonging. The event will have cultural music, food, and dance.

How will the City's contribution (if approved) be recognized in event media and publicity?
All flyers, news outlets, social media posts, day of recognitions.

Upload your Entity Status Letter (Entity Name listed on this application must match the Entity Status Letter Name)	City of Milpitas (1).pdf

Within 60 days after completion of the event for which a donation was received or a fee waiver was granted by the City of Milpitas, your organization will provide a report to the Director of Recreation and Community Services to include at minimum: number of participants, copies of all publicity of the event, any benefit to the community, amount of funds raised and an accounting of how the proceeds of the event will be dispersed.

Failure to abide by the rules and procedures set

forth in the City Council Donation/Fee Waiver Policy will result in the organization being denied for funding and/or fee waiver in the future. Draw your signature into the box below.	Rob Means

STATE OF CALIFORNIA
FRANCHISE TAX BOARD
PO BOX 942857
SACRAMENTO CA 94257-0540

Entity Status Letter

Date: 9/13/2022

ESL ID: 2348794413

Why You Received This Letter

According to our records, the following entity information is true and accurate as of the date of this letter.

Entity ID: 2119575

Entity Name: SUNNYHILLS NEIGHBORHOOD ASSOCIATION

- [x] 1. The entity is in good standing with the Franchise Tax Board.
- [ ] 2. The entity is **not** in good standing with the Franchise Tax Board.
- [x] 3. The entity is currently exempt from tax under Revenue and Taxation Code (R&TC) Section 23701 f.
- [ ] 4. We do not have current information about the entity.
- [ ] 5. The entity was administratively dissolved/cancelled on through the Franchise Tax Board Administrative Dissolution process.

Important Information

- This information does not necessarily reflect the entity's current legal or administrative status with any other agency of the state of California or other governmental agency or body.
- If the entity's powers, rights, and privileges were suspended or forfeited at any time in the past, or if the entity did business in California at a time when it was not qualified or not registered to do business in California, this information does not reflect the status or voidability of contracts made by the entity in California during the period the entity was suspended or forfeited (R&TC Sections 23304.1, 23304.5, 23305a, 23305.1).
- The entity certificate of revivor may have a time limitation or may limit the functions the revived entity can perform, or both (R&TC Section 23305b).

Connect With Us

Web: **ftb.ca.gov**
Phone: 800-852-5711 from 7 a.m. to 5 p.m. weekdays, except state holidays
916-845-6500 from outside the United States

California
Relay Service: 711 or 800-735-2929 (For persons with hearing or speech impairments)

CITY OF MILPITAS
AGENDA REPORT
(AR)

Item Title:	**Approve the Community Heroes Program City Council Policy (Staff Contact: Renee Lorentzen, Recreation and Community Services Director, 408-586-3409)**
Category:	Consent Calendar-Community Services and Sustainable Infrastructure
Meeting Date:	5/21/2024
Recommendation:	Approve the Community Heroes City Council Policy

BACKGROUND:
At the January 30, 2024, City Council Budget Workshop, the City Council approved the development of a program policy that provides City Councilmembers the opportunity to give, annually, special recognition to individuals, groups, or organizations that have made significant contributions to the Milpitas community, in support of the City Council's goals and priority areas.

This policy establishes the criteria and procedures for a Milpitas Community Heroes Program to recognize individuals, groups, or organizations, through special certificates of recognition given by individual members of the Milpitas City Council on an annual basis.

ANALYSIS:
The proposed policy provides a framework for Milpitas City Councilmembers to recognize, annually, individuals, groups, or organizations, through special certificates of recognition given by individual members of the Milpitas City Council.

Policy Overview
Under the draft Community Heroes program policy, certificates of recognition may be issued to individuals, groups or organizations within the Milpitas community for noteworthy achievements (individual or group), exceptional contributions to the Milpitas community, or significant commemorative events or occasions held within the jurisdiction of Milpitas on an annual basis.

Each member of the City Council may nominate one (1) individual, group, or organization for a Community Hero certificate per fiscal year. Nominations should align with the nomination criteria outlined in the new policy but are otherwise at the sole discretion of the nominating Councilmember.

Community Heroes Program Certificates of Recognition will be presented annually at a City Council meeting in June, during Presentations. Each Councilmember will sign their own nominee's certificate. Following the Presentations, City Council will call a 20-minute break to celebrate with the nominees.

Nomination Criteria

The Community Heroes Program acknowledges and celebrates noteworthy achievements (individual or group) contributions to the community, or a significant commemorative event or occasion within the Milpitas community, such as but not limited to:

- Individuals, community groups, or organization whose volunteer efforts and/or philanthropic works have benefitted the Milpitas community and/or Milpitas residents;
- Individual or club academic achievement at the local, regional or national level (i.e., school valedictorian, placement at regional or national competitions or exhibitions);

- Individuals, community groups, or organizations for winning local, regional or national competitions or awards; or
- Local organizations or businesses for milestone commemorative events or occasions in Milpitas.

Procedure
Nominations for recognition under the Milpitas Community Heroes Program should be submitted through a virtual form link, embedded in the policy, to the Recreation and Community Services Director or their designee, at least twenty (20) business days before the first City Council meeting in June. Nominations for recognition under the Milpitas Community Heroes Program must include the following information for both the recognition certificates and related press releases, including but not limited to:

- Community Hero nominee name as it will appear on the certificate;
- Information on why the individual, community group, or organization is being nominated in alignment with the criteria outlined in this policy;
- Brief background or historical information on the individual, community group, or organization; and
- Contact information for the individual, group, or organization being nominated for recognition as a Community Hero.

The City Manager's Office or their designee will prepare certificates of recognition unique to the Community Heros program for each individual, group, or organization nominated as a Community Hero and coordinate with the City Manager's Office for the respective Councilmember signatures.

The Public Information Officer will prepare and distribute a Press Release on the collective Community Heroes nominees. If the certificate or recognition is not being presented at the designated Council meeting due to Councilmember absence or nominee absence, the certificate will be mailed.

FISCAL IMPACT:
Minor costs associated with the Community Heroes reception will be absorbed by the City Manager's Budget and are estimated at an amount not to exceed $1,500.

CALIFORNIA ENVIRONMENTAL QUALITY ACT:
The action is continuing administrative or maintenance activity and is not a project pursuant to Cal. Code Regs., tit. 14, § 15378.

RECOMMENDATION:
Approve and adopt a City of Milpitas Community Heroes Program City Council Policy.

ATTACHMENT:
(a) Draft Community Heroes Program City Council Policy
(b) Draft Community Heroes Certificate

CITY OF MILPITAS

Revision	Date
Original	5/21/2024

CITY COUNCIL POLICY

Policy No: Click or tap here to enter text.	**CITY COUNCIL COMMUNITY HEROES PROGRAM POLICY**	**Effective Date:** 5/21/2024
Revision No: NA	**Policy Administrator:** Recreation and Community Services	**Next Review Due:** Click or tap to enter a date.
Related Policies and Procedures: None	**Approved by:** Click or tap here to enter text. Council meeting date, agenda item #, and vote	**Date Approved:** 5/21/2024

1. PURPOSE

1.1. This policy establishes the criteria and procedures for a Milpitas Community Heroes Program to recognize individuals, groups, or organizations, on an annual basis, through special certificates of recognition given by individual members of the Milpitas City Council.

1.2. The Community Heroes Program gives special recognition to individuals, groups, or organizations that have made significant contributions to the Milpitas community, in support of the City Council's goals and priority areas.

2. POLICY

2.1. Under the Community Heroes program, certificates of recognition may be issued to individuals, groups or organizations within the Milpitas community for noteworthy achievements (individual or group), exceptional contributions to the Milpitas community, or significant commemorative events or occasions held within the jurisdiction of Milpitas.

2.2. Each member of the City Council may nominate one (1) individual, group, or organization for a Community Hero certificate per fiscal year. Nominations should align with the nomination criteria outlined in this policy and are at the sole discretion of the nominating Councilmember.

2.3. Councilmembers who nominate the same individual, group, organization must both agree to jointly recognize the Community Hero. If there is no consensus, the Councilmember who submitted their nomination first will recognize said Community Hero, and the other Councilmember(s) may nominate a different Community Hero.

2.4. Under the Community Heroes Program, certificates of recognition will be presented annually at a City Council meeting in June, during Presentations. City Councilmembers will sign their nominee's certificate. Following the Presentations, City Council will call a 20-minute break to celebrate with the nominees.

2.5. Community Heroes certificates shall be unique to the Community Heroes program and shall only be issued pursuant to this policy.

2.6. Nomination Criteria

2.6.1. The Community Heroes Program acknowledges and celebrates the noteworthy achievements (individual or group), contributions to the community, or a significant commemorative event or occasion within the Milpitas community, such as but not limited to:

2.6.1.1 Individuals, community groups, or organization whose volunteer efforts and/or philanthropic works have benefitted the Milpitas community and/or Milpitas residents;

2.6.1.2 Individual or club academic achievement at the local, regional or national level (i.e., school valedictorian, placement at regional or national competitions or exhibitions);

2.6.1.3 Individuals, community groups, or organizations for winning local, regional or national competitions or awards; or

2.6.1.4 Local organizations or businesses for milestone commemorative events or occasions in Milpitas.

3. DEFINITIONS

NA

4. PROCEDURE

4.1. Nominations for recognition under the Milpitas Community Heroes Program should be submitted VIRTUALLY HERE to the Recreation and Community Services Director or their designee, at least twenty (20) business days before the first City Council meeting in June.

4.2. Nominations for recognition under the Milpitas Community Heroes Program must include the following information for both the recognition certificates and related press releases, including but not limited to:

4.2.1. Community Hero nominee name as it will appear on the certificate;

4.2.2. Information on why the individual, community group, or organization is being nominated in alignment with the criteria outlined in this policy;

4.2.3. Brief background or historical information on the individual, community group, or organization; and

4.2.4. Contact information for the individual, group, or organization being nominated for recognition as a Community Hero.

4.3. The City Manager's Office or their designee will prepare certificates of recognition unique to the Community Heroes program for each individual, group, or organization nominated as a Community Hero and coordinate with the City Manager's Office for the respective Councilmember signatures.

4.4. The Public Information Officer will prepare and distribute a Press Release on the collective Community Heroes nominees.

4.5. If the certificate or recognition is not being presented at the designated Council meeting due to Councilmember absence or nominee absence, the certificate will be mailed.

Please Attach All Exhibits After This Page

ATTACHMENT A

CITY OF MILPITAS

COMMUNITY HEROES AWARD 2024

PROUDLY PRESENTED TO

Insert Name

The City of Milpitas thanks you for your dedication and support to the Milpitas community through [DESCRIPTION OF NOMINATION]. We applaud all your hard work! Individuals/Organizations like you/yours make Milpitas a better place.

EXAMPLE

Milpitas

_____

COUNCILMEMBER NAME

DATE

CITY OF MILPITAS
AGENDA REPORT
(AR)

Item Title:	**Approve the Conceptual Designs for South Milpitas Boulevard Road Extension, Project No. 2016, and Montague Pedestrian Overcrossing at Penitencia Creek, Project No. 2018; and Adopt a Resolution Adopting the Initial Study Mitigated Negative Declaration for South Milpitas Boulevard Road Extension, Project No. 2016 (Staff Contact: Christian Di Renzo, Public Works Director, 408-586-2602; Michael Silveira, City Engineer, 408-586-3303)**
Category:	Public Hearings-Community Services and Sustainable Infrastructure
Meeting Date:	5/21/2024
Recommendation:	(1) Approve the conceptual designs for the South Milpitas Boulevard Road Extension, Project No. 2016, and the Montague Pedestrian Overcrossing at Penitencia Creek, Project No. 2018; (2) Conduct a public hearing for the South Milpitas Boulevard Road Extension, Project No. 2016; (3) Adopt a resolution to adopt the Initial Study/Mitigated Negative Declaration for the South Milpitas Boulevard Road Extension, Project No. 2016; (4) Authorize the Public Works Director to file a Notice of Determination for South Milpitas Boulevard Road Extension, Project No. 2016, in accordance with CEQA Guidelines Section 15075. (5) Find that the Montague Pedestrian Overcrossing at Penitencia Project meets all the requirements for a Statutory Exemption under Public Resources Code section 21080.25 and is therefore, is statutorily exempt from environmental review under CEQA; and (6) Authorize the Public Works Director to file a Notice of Exemption for Montague Pedestrian Overcrossing, Project No. 2018 in accordance with CEQA guidelines section 15062.

BACKGROUND:

The South Milpitas Boulevard Road Extension, Project No. 2016 ("SMB Project") and the Montague Pedestrian Overcrossing at Penitencia, Project No. 2018 ("POC Project"), collectively "Projects", are included in the adopted FY 2025-2029 Capital Improvement Program. Both Projects are listed in the Basic Infrastructure Program of the Metro Specific Plan Update (formerly known as Transit Area Specific Plan [TASP]) to provide safe and convenient pedestrian and bicycle connectivity between residential neighborhoods, schools, parks, the Great Mall, and Transit Centers such as Light Rail and BART Stations.

In 2015, as part of the conditions of approval for 650 Capitol and Anton/Ascent residential development, the developer, LMC Milpitas Holding I, LLC, was required to provide feasibility studies and design drawings for both Projects. These feasibility studies and design drawings were for the City to understand the cost and how the new infrastructure improvements would be integrated with their current and future development in the Tango subdistrict. As development along Sango Court and Tarob Court has continued to evolve, the City has partnered with developers to construct the extension of the Sango Court to Tarob Court which is a critical component of the SMB Project. In 2023, staff resumed design of both Projects which are anticipated to be completed by the end of 2024. The conceptual designs of both Projects are now ready for the approval by the City Council (**Attachment a**).

The California Environmental Quality Act (CEQA) requires the City to inform decision makers and the public about the potential environmental impacts of both Projects, and to reduce those environmental impacts to the extent feasible. The Environmental Impact Report prepared for the TASP certified in 2008 and the Subsequent Environmental Impact Report prepared for the Milpitas Metro Specific Plan (MMSP) certified in 2023 evaluated the potential environmental impacts of the Specific Plans at a programmatic level. Both Specific Plans assumed any project-level, site-specific environmental issues for a given project would require additional review according to CEQA guidelines. The City retained David J. Powers and Associates (DJPA) to complete such environmental review for both Projects.

ANALYSIS:
Development of the TASP, adopted on June 3, 2008, and the Milpitas Metro Specific Plan (MMSP) adopted on February 7, 2023, was guided by community engagement with regional stakeholders, developers, residents, and City decision-makers. Both Specific Plans identified the Projects as much-needed infrastructure improvements to achieve the core circulation key to providing safe and convenient pedestrian and bicycle connectivity between residential neighborhoods, schools, parks, the Great Mall, and Transit Centers.

South Milpitas Boulevard Road Extension, Project No. 2016 ("SMB Project")
The SMB Project provides for the design, construction, and reimbursement to developers of the extension of Sango Court to Tarob Court, and South Milpitas Boulevard to Sango Court road extension. The SMB Project aligns with the MMSP vision of providing bicyclists, pedestrians and vehicle connectivity across the Penitencia Creek and within the Tango Subdistrict. The SMB road extension will comprise of 11' vehicular travel lanes, 6' bike lanes, and 6' sidewalks in both directions, and a bridge to be constructed to cross over the Penitencia Creek. Decorative steel vertical plates illuminated by up-lights will be installed along the bridge railing to resemble the rolling hills of Milpitas.

The extension of Sango Court to Tarob Court will be constructed according to road standards set forth in the MMSP, which is 11' vehicular travel lanes with a 12' planter and sidewalk in both directions and an 8' parking lane. The City partnered with developers of 355 Sango Court and the GeoMax 2 residential development to construct the road extension. Each residential development project is conditioned to dedicate half of the road section along the respective frontage, with each developer being reimbursed for the City cost-share of the road, resulting in a fully functional road after construction. The road extension fronting the 355 Sango Court development was completed in 2023; the GeoMax 2 development is anticipated to be completed in 2026.

The estimated SMB Project cost is $15.7 million; $12.7 million will be funded by TASP Impact Fees, with the remainder anticipated to be funded by a $3.0 million federal earmark selected through the Community Project Funding/Congressionally Directed Spending bill in March 2022. The SMB Project is anticipated to start construction in 2026 pending approval of permits from regulatory agencies, acquisition of right-of-way from the Santa Clara Valley Water District, construction of Sango Court road extension by GeoMax 2 residential development, and the authorization to bid the SMB Project from Caltrans, who administers the federal earmark requirements.

Pedestrian Overcrossing at Penitencia Creek Project no. 2018 ("POC Project")
The POC Project provides for the design and construction of a pedestrian overcrossing across Montague Expressway adjacent to Penitencia Creek channel. The POC Project aligns with the MMSP vision to provide bicyclists and pedestrians connectivity across Montague Expressway by connecting trails along the east side of the channel and the sidewalks on Montague Expressway.

The overcrossing will be a single 198-foot-long span steel bowstring truss supported by two access concrete structures, where each structure consists of a glass tower elevator to comply with ADA standards, a concrete staircase, and mechanical room for operations. Each access structure will be constructed on private property dedicated to the City by easement for such use as part of the Eleanor (Centre Pointe) and 650 Montague residential development. Architectural enhancements depicting the natural beauty of the Bay Area wetlands, such as the landscape and wildlife, will be incorporated into the span truss, glass tower elevator, the concrete walls, and railings for the staircase. Directional lighting will be installed to illuminate the features in the evening.

The estimated POC Project cost is $25 million where $3.5 million is currently funded by TASP Impact fees for the design phase; the remaining $21.5 million does not have identified funding at this time. In an effort to explore funding opportunities, Staff submitted a request for funding in February 2024 through FY24-25 Rebuilding American Infrastructure with Sustainability and Equity (RAISE) Grant program; the funding decision is expected in June 2024. Staff will continue to explore State or Federal grant funding opportunities to address the Project budget shortfall.

Staff presented both Projects to the Transportation Subcommittee on October 15, 2021, and August 23, 2023, and received their support for them. Their feedback and comments have been taken into consideration and incorporated in the updated conceptual plans, which are now ready for the approval by the City Council (**Attachment a**). After the City Council approval of the conceptual plans, the consultant will be able to finalize design drawings for permitting and architectural enhancement prototypes to ensure constructability and quality of the features.

CALIFORNIA ENVIRONMENTAL QUALITY ACT:

South Milpitas Boulevard Road Extension, Project No. 2016 ("SMB Project")
The City of Milpitas, as the Lead Agency, has prepared an Initial Study/Mitigated Negative Declaration (IS/MND) (**Attachment c**), Mitigation Monitoring and Reporting Program (MMRP) (**Attachment d**) and the Notice of Determination (**Attachment e**) for the SMB Project pursuant to the CEQA.

The IS/MND document analyzes the Project in accordance with the State CEQA Guidelines (California Code of Regulations §15000 et. seq.) and applicable General Plan policies including the City Municipal Code regulations. The Initial Study prepared by the City was undertaken for the purpose of deciding whether the proposed project may have a significant effect on the environment. The Initial Study has incorporated all the relevant information regarding the potential environmental effects of the SMB Project and confirms the determination that an Environmental Impact Report is not required for the project. On the basis of the Initial Study, City staff have concluded the proposed project with implementation of the mitigation measures identified in the Initial Study will not have a significant effect on the environment and, therefore, have prepared a Mitigated Negative Declaration for the following areas:

- Air Quality
- Biological Resources
- Cultural Resources
- Geology and Soils
- Hazards and Hazardous Material
- Tribal Cultural Resources
- Mandatory Findings of Significance

The Notice of Intent (NOI) (**Attachment f**) to adopt a mitigated negative declaration was publicized in accordance with the City and State noticing requirements. The Notice was published on the City's webpage, *Milpitas Post* newspaper, and County of Santa Clara Recording Office. The publication of the initial study for a 30-day public review and comments began on March 1 ,2024, and ended on April 1, 2024. During this period, the initial study document was made available to local, state, and federal agencies and to other interested organizations and individuals for review. On March 29, 2024, Santa Clara Valley Water District (Valley Water) provided comments in response to the IS/MND (**Attachment g**). The City and the Project's environmental consultant reviewed and determined the comments are minor with no substantial impact to the overall IS/MND, and thus prepared a Response To Comments (RTC) Memorandum (**Attachment h**) that was disseminated to Valley Water on May 1, 2024, for their review.

Notice of a May 21, 2024, Public Hearing for the adoption of the Initial Study/Mitigated Negative Declaration was published and circulated as required by CEQA. Staff recommends the City Council open the Public Hearing, receive comments, move to close the Public Hearing following any testimony received, and to adopt a Resolution (**Attachment b**) adopting the Mitigated Negative Declaration for the South Milpitas Boulevard Vehicle Road Extension, Project No. 2016.

Pedestrian Overcrossing at Penitencia Creek Project no. 2018 ("POC Project")
The City of Milpitas, as the Lead Agency, has prepared a Notice of Exemption Memorandum (**Attachment i**) for the POC Project pursuant to the California Environmental Quality Act (CEQA). Pursuant to Public Resources Code section 21080.25 (c), the project is found to be statutorily exempt given it meets all the following requirements.

- The City is carrying out the POC Project and is the Lead Agency for the POC Project .
- The POC Project is in an urbanized area.
- The POC Project is located within an existing public right-of-way.
- The POC Project would be limited to the construction of a pedestrian overcrossing extending over Montague Expressway and does not propose any changes to that could affect automobile capacity and does not include the addition of any auxiliary lanes.
- The POC Project construction shall not require the demolition of affordable housing units.
- The POC Project cost would not exceed $100,000,000.

In addition to the requirements of subsection (c), pursuant to Public Resources Code 21080.25(f)(1)(A), the City will also certify that the Project will be completed by a skilled and trained workforce in accordance with Chapter 2.9 (commencing with Section 2600) of Part 1 of Division 2 of the Public Contract Code.

As documented above, the POC Project meets all the requirements for a Statutory Exemption under Public Resources Code section 21080.25; therefore, is statutorily exempt from environmental review under CEQA.

POLICY ALTERNATIVE(S):

Alternative 1: Do not approve the conceptual design and adopt the Resolution adopting the IS/MND for SMB Project.
Pros: None
Cons: Not approving the conceptual design and adoption of IS/MND will delay finalizing the design drawings and certifying CEQA clearance that is needed to start to project approval/permitting process with regulatory agencies. Once the agencies have provided approval/permits, Caltrans will then be able to start the review of the authorization to bid package which is anticipated to commence in January in order to meet the obligation date.
Reason for Not Recommending: The City would be at risk of losing the $3.0 million federal earmark if the City does not meet the obligation date of September 30, 2025.

Alternative 2: Do not approve the conceptual design for POC Project.
Pros: None
Cons: Not approving the conceptual design will prolong the completion of the design drawings that is scheduled to be completed by the end of 2024 which will be ready for construction if funding is secured.
Reason for Not Recommending: Denying the approval of conceptual design will cost the City additional fees in design if the schedule resumes at a late date.

FISCAL IMPACT:
There is no fiscal impact associated with the approval of the conceptual drawings for both projects.

The estimated SMB Project cost is $15.7 million; $12.7 million will be funded by TASP Impact Fees, with the remainder is anticipated to be funded by a $3.0 million federal earmark selected through the Community Project Funding/Congressionally Directed Spending bill in March 2022.
The estimated POC Project cost is $25 million where $3.5 million is currently funded by TASP Impact fees for the design phase; the remaining $21.5 million does not have identified funding at this time.
These projects are anticipated to impact the Department of Public Works' operating budget in future years. As the scope of this project is better defined through the design process, operating impacts will be reviewed and adjustments may be brought forward in future budget appropriation requests.

RECOMMENDATION:
(1) Approve the Conceptual Designs for South Milpitas Boulevard Road Extension, Project No. 2016, and Montague Pedestrian Overcrossing at Penitencia Creek Project No. 2018;
(2) Conduct a public hearing for the South Milpitas Boulevard Road Extension, Project No. 2016;
(3) Adopt a Resolution to Adopt Initial Study/Mitigated Negative Declaration for South Milpitas Boulevard Road Extension, Project No. 2016;

(4) Authorize the Public Works Director to file a Notice of Determination for South Milpitas Boulevard Road Extension, Project No. 2016 in accordance with CEQA guidelines section 15075;
(5) Find that the Montague Pedestrian Overcrossing at Penitencia Project meets all the requirements for a Statutory Exemption under Public Resources Code section 21080.25 and is therefore, is statutorily exempt from environmental review under CEQA; and
(6) Authorize the Public Works Director to file a Notice of Exemption for Montague Pedestrian Overcrossing, Project No. 2018 in accordance with CEQA guidelines section 15062.

ATTACHMENT(S):
(a) POC and SMB Conceptual Plans
(b) Resolution
(c) SMB Initial Study/Mitigated Negative Declaration
(d) SMB Mitigation Monitoring Reporting Program
(e) SMB Notice of Determination
(f) SMB Notice of Intent
(g) Santa Clara Valley Water Comments Letter to IS/MND
(h) Responses to Comments Memorandum
(i) POC Notice of Exemption Memorandum

ATTACHMENT 1

MONTAGUE PEDESTRIAN OVERCROSSING AT PENITENCIA CREEK

CITY OF MILPITAS, CALIFORNIA

CONCEPTUAL DESIGN

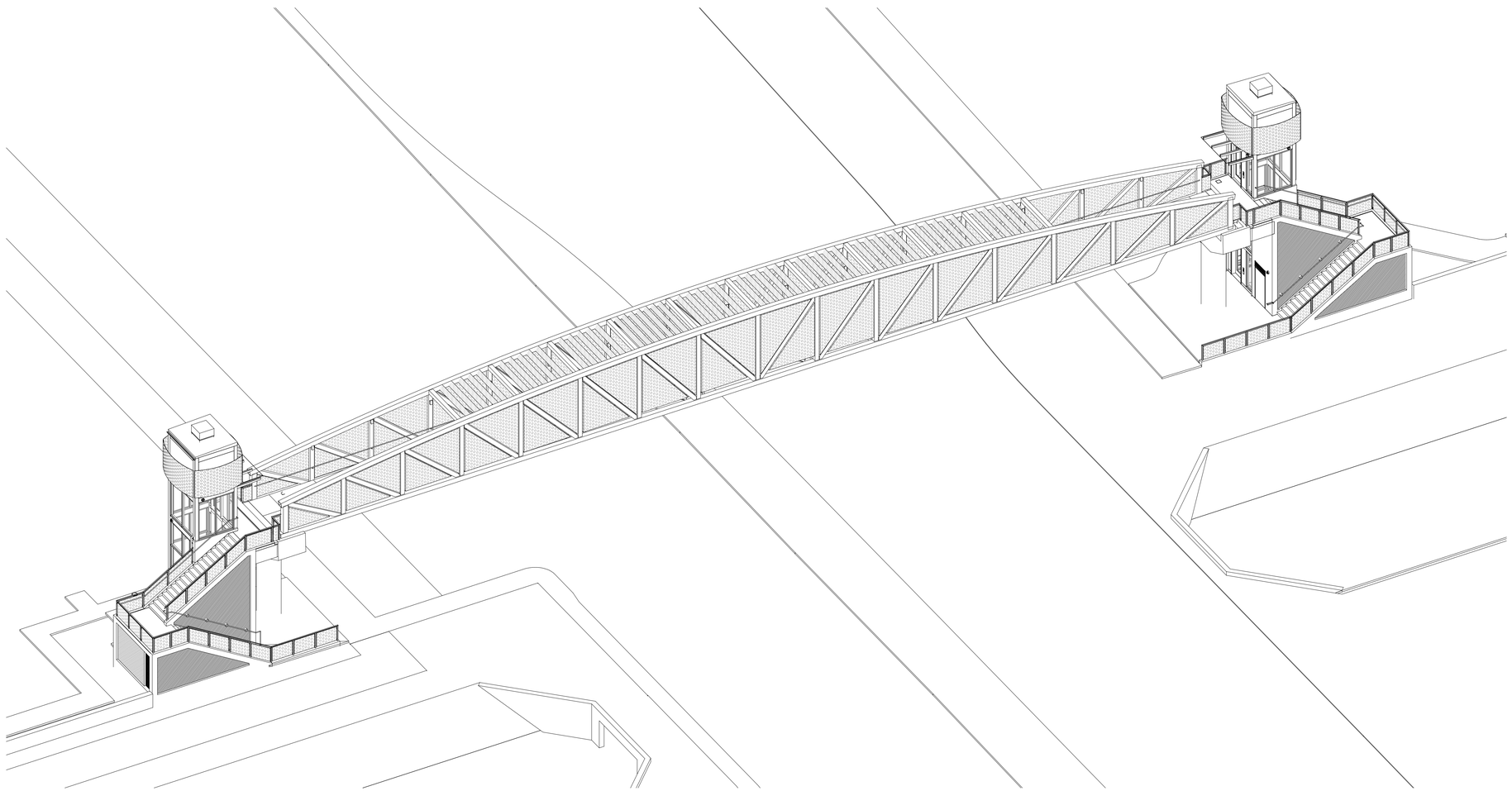

DONALD MACDONALD
BRIDGE ARCHITECTS LLP

CORNERSTONE structural engineering group

ARTIK ART & ARCHITECTURE

Designer Stamp:

Record Drawings

Designer: _____ Date: _____

Public Works Inspector: _____ Date: _____

Utility / Facility Dept. Head: _____ Date: _____

Project Engineer: _____ Date: _____

Public Improvements Initially Accepted by the City Council on: _____ Res. No. _____

Drawn By: TW Date: 11/03/2023

Checked By: JS Date: 11/03/2023

Designed By: SL Date: 11/03/2023

Revisions

Num.	Description	Engr. Aprv.	Date

CITY OF MILPITAS ENGINEERING DIVISION

MONTAGUE EXPRESSWAY PEDESTRIAN OVERCROSSING

COVER SHEET

RECOMMENDED FOR BIDDING BY: _____ DATE: _____
Michael Silveira, P.E., CIP Manager

APPROVED FOR BIDDING BY: _____ DATE: _____
TBD, City Engineer

CITY PROJECT NO. CIP 2018

Rec. Dwg. No.

DATE: 11/03/2023

SCALE:

SHEET G-000

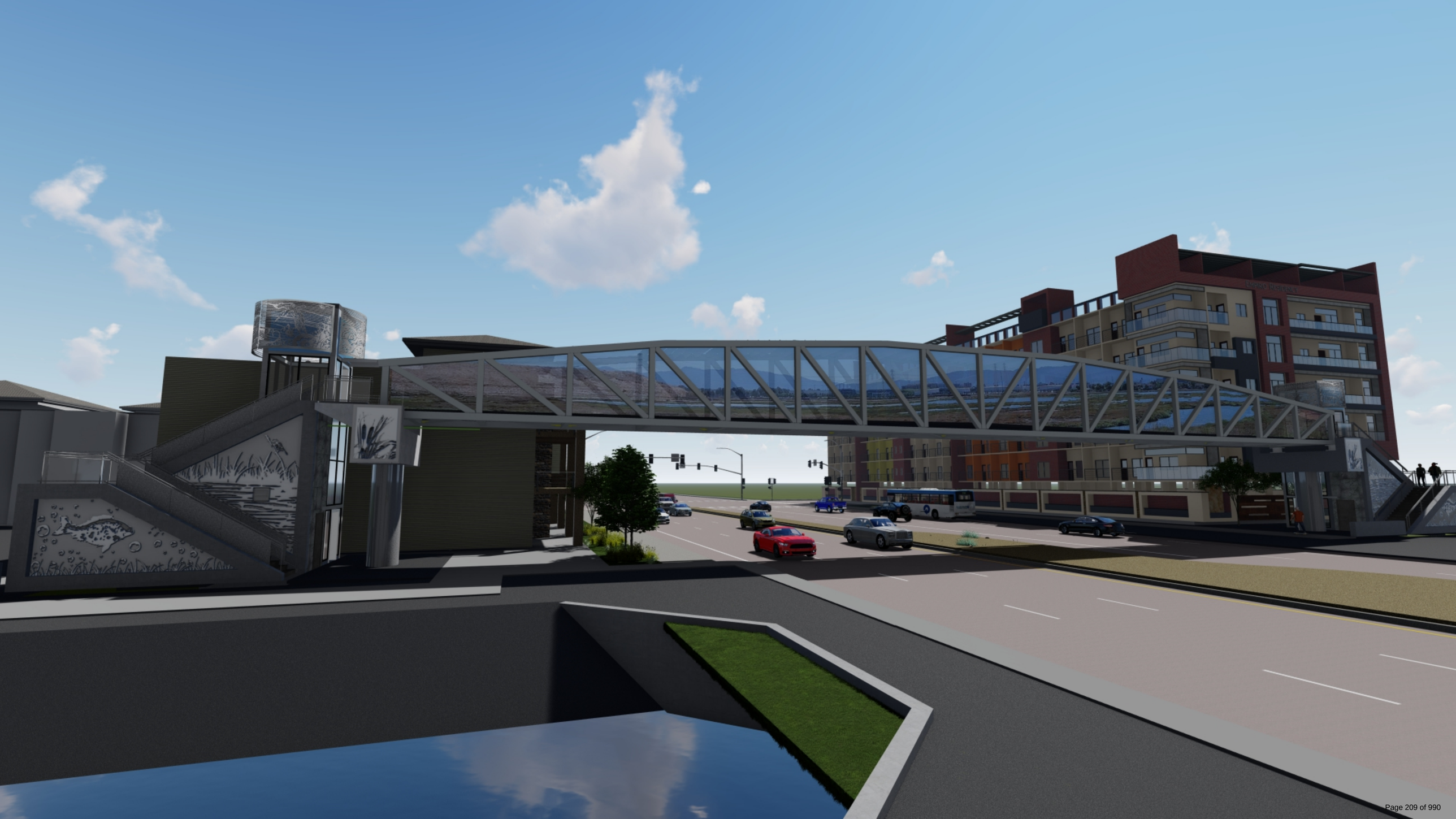

SOUTH MILPITAS BOULEVARD ROAD EXTENSION - CONCEPTUAL DESIGN

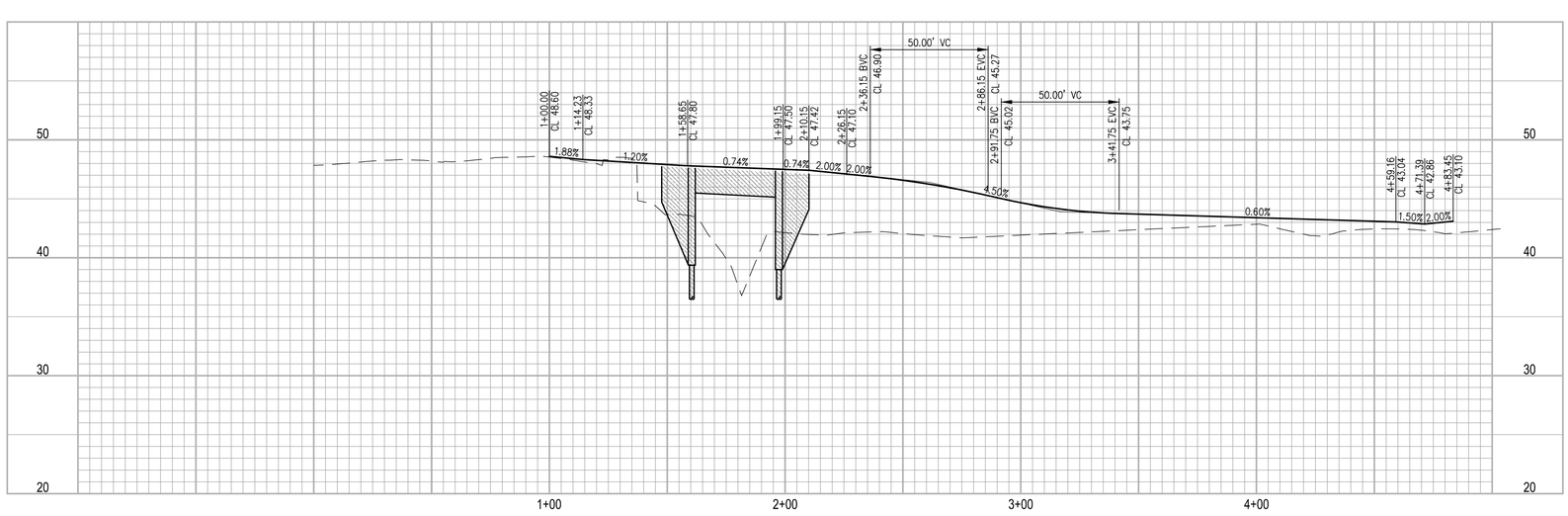

SOUTH MILPITAS BOULEVARD EXTENSION

SCALE: HORIZONTAL 1" = 30'
VERTICAL 1" = 6'

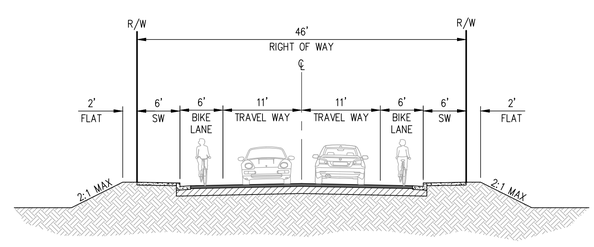

S. MILPITAS BLVD. EXTENSION
SECTION A-A
NOT TO SCALE

PRELIMINARY

ROADWAY PLAN LINE EXHIBIT

SOUTH MILPITAS BLVD BRIDGE PROJECT

CITY OF MILPITAS SANTA CLARA COUNTY CALIFORNIA

SCALE: 1" = 30' DATE: APRIL 2024

0 30 60 90

cbg CIVIL ENGINEERS ▪ SURVEYORS ▪ PLANNERS

SAN RAMON ▪ (925) 866-0322
ROSEVILLE ▪ (916) 788-4456
WWW.CBANDG.COM

H:\3648-000\ACAD\EXHIBITS\XB-PRELIMINARY PLAN LINE-BRIDGE_2024-04-22.DWG

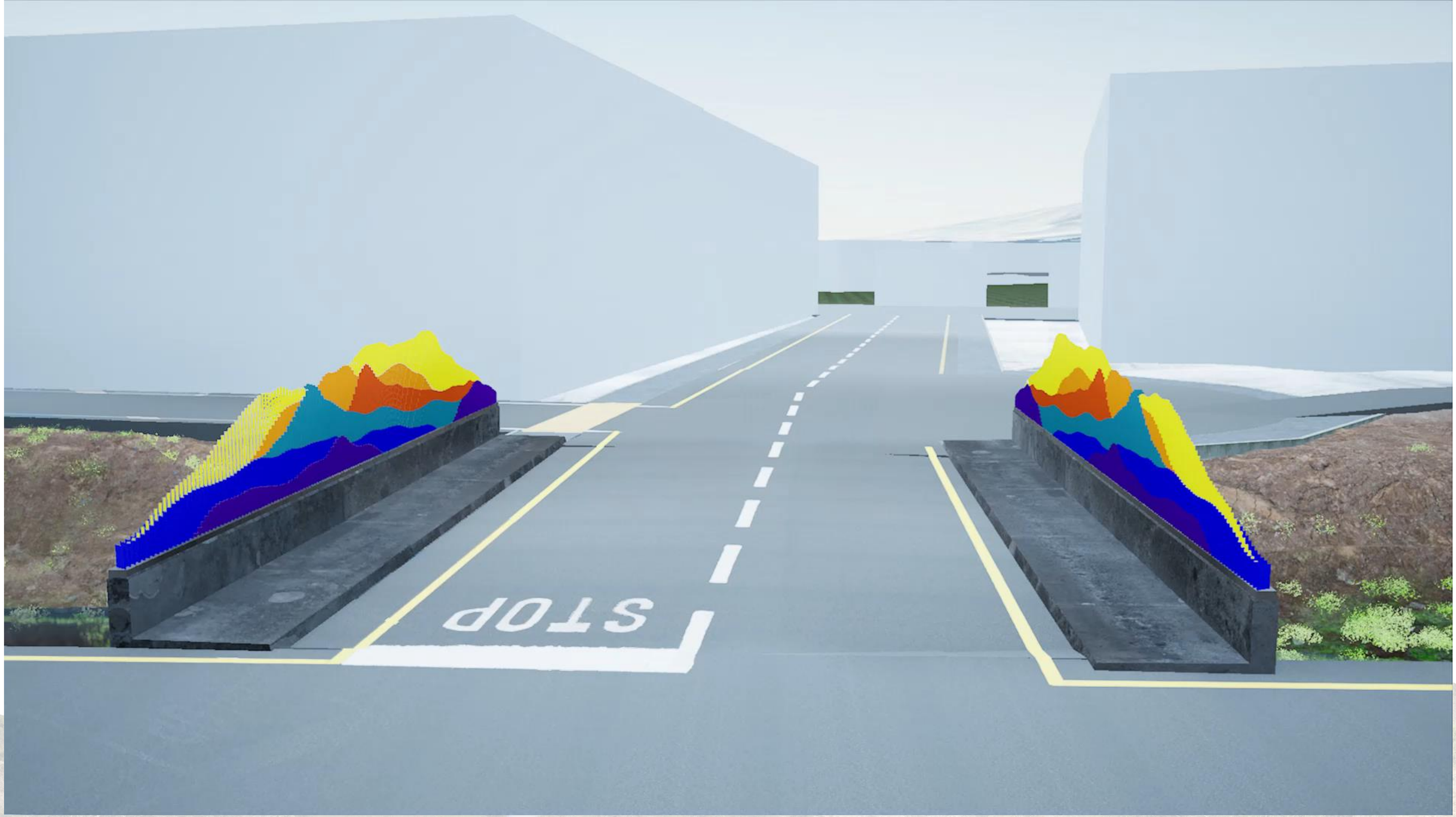

VEHICLE OVERCROSSING @ PENITENCIA - DAYLIGHT ANIMATION

SOUTH MILPITAS BOULEVARD VEHICLE OVERCROSSING EAST PENITENCIA CREEK

Prepared for **CITY OF MILPITAS**

ARTIK ART & ARCHITECTURE

DATE: 8/19/21

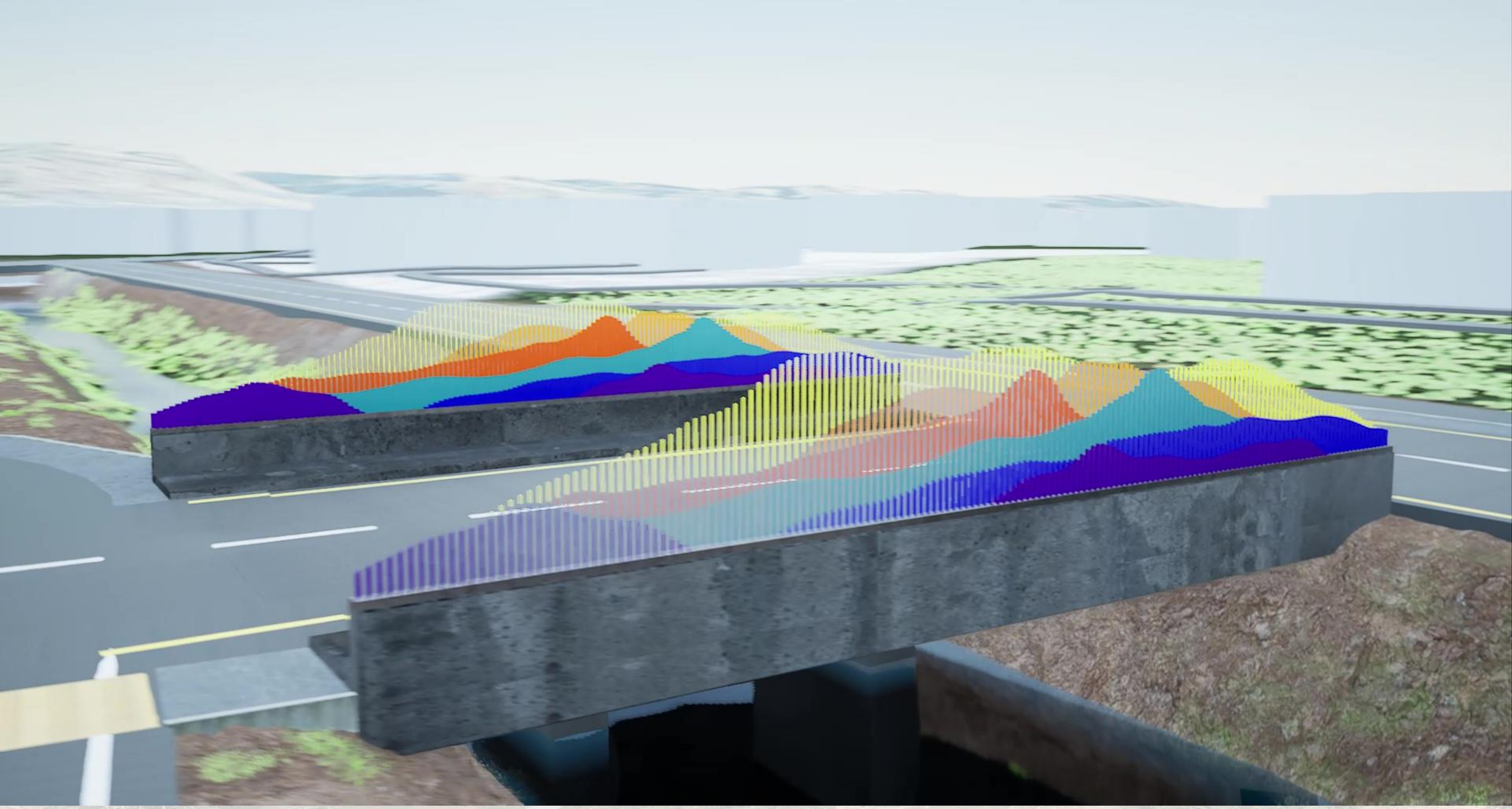

VEHICLE OVERCROSSING @ PENITENCIA - RENDERED VIEW

SOUTH MILPITAS BOULEVARD VEHICLE OVERCROSSING EAST PENITENCIA CREEK

Prepared for **CITY OF MILPITAS**

DATE: 8/19/21

RESOLUTION NO. _____

A RESOLUTION OF THE CITY COUNCIL OF THE CITY OF MILPITAS ADOPTING MITIGATED NEGATIVE DECLARATION FOR THE S. MILPITAS BOULEVARD ROAD EXTENSION, PROJECT NO. 2016.

WHEREAS, South Milpitas Boulevard Road Extension, Project No. 2016 ("Project") is included in the adopted 2025-2029 Capital Improvement Program. The Project provides for the design, construction, and reimbursement to developers of the extension of Sango Court to Tarob Court and South Milpitas Boulevard to Sango Court road extension.

WHEREAS, The development of the of Transit Area Specific Plan adopted on June 3, 2008 and Milpitas Metro Specific Plan adopted on February 7, 2023 were guided by community engagement with regional public stakeholders, provide developers, residents, and City decision makers. The Project is part of the Basic Infrastructure Program of the Metro Specific Plan to provide safe and convenient pedestrian connectivity between Metro residential neighborhoods, schools, parks, Great Mall, and the Transit Center; and

WHEREAS, on October 15, 2021 and August 23, 2023, Staff presented the Project the Transportation Subcommittee meetings. The Subcommittee expressed their support of the design and recommended to be present to the City Council for approval; and

WHEREAS, the City of Milpitas, as the Lead Agency, has prepared an Initial Study/Mitigated Negative Declaration (IS/MND), Mitigation Monitoring and Reporting Program (MMRP) and the Notice of Determination for the Project pursuant to the California Environmental Quality Act (CEQA); and

WHEREAS, the IS/MND document analyzes the Project in accordance the State CEQA Guidelines (California Code of Regulations §15000 et. seq.) and applicable General Plan policies including the City Municipal Code regulations; and

WHEREAS, the Initial Study prepared by the City was undertaken for the purpose of deciding whether the Project may have a significant effect on the environment. The Initial Study has incorporated all the relevant information regarding the potential environmental effects of the Project and confirms the determination that an Environmental Impact Report (EIR) is not required for the Project; and

WHEREAS, On the basis of the Initial Study, the City have concluded that the Project with implementation of the mitigation measures identified in the Initial Study will not have a significant effect on the environment and, therefore, have prepared a Mitigated Negative Declaration for the following areas:

- Air Quality
- Biological Resources
- Cultural Resources
- Geology and Soils
- Hazards and Hazardous Material
- Tribal Cultural Resources
- Mandatory Findings of Significance; and

WHEREAS, The Notice of Intent (NOI) to adopt a mitigated negative declaration was publicized in accordance with the City and State noticing requirements. The Notice was published on the City's webpage, Milpitas Post newspaper, and the County of Sant Clara Recording Office. The publication of

the Initial Study for a 30-day public review and comments began on March 1 ,2024 and ended on April 1, 2024. During this period, the Initial Study document was made available to local, state, and federal agencies, and to other interested organizations and individuals for review; and

WHEREAS, On March 29, 2024, Santa Clara Valley Water District (Valley Water) provided comments in response to the IS/MND. The City and the Project's environmental consultant reviewed and determined that the comments are minor which has no substantial impact to the overall IS/MND, and thus, prepared a Response To Comments (RTC) Memorandum, which was disseminated to Valley Water on May 1, 2024 for their review; and

WHEREAS, Notice of a May 21, 2024 Public Hearing for the adoption of the Initial Study/ Mitigated Negative Declaration was published and circulated as required by California Environmental Quality Act (CEQA).

NOW, THEREFORE, the City Council of the City of Milpitas hereby finds, determines, and resolves as follows:

1. The City Council has considered the full record before it, which may include but is not limited to such things as the staff report, testimony by staff and the public, and other materials and evidence submitted or provided to it. Furthermore, the recitals set forth above are found to be true and correct and are incorporated herein by reference.

2. The City Council hereby adopts a resolution to adopt the mitigated negative declaration/initial study for the S. Milpitas Boulevard Road Extension, Project No. 2016.

3. A Notice of Determination shall be filed with the County of Santa Clara within five (5) working days of the final Project's approval.

PASSED AND ADOPTED this 21st day of May 2024 by the following vote:

AYES:

NOES:

ABSENT:

ABSTAIN:

ATTEST: APPROVED:

_____ _____

Suzanne Guzzetta, City Clerk Carmen Montano, Mayor

APPROVED AS TO FORM:

_____

Michael Mutalipassi, City Attorney

CITY OF MILPITAS

Mitigated Negative Declaration

Pursuant to Section 21000 et seq of the Public Resources Code, a Mitigated Negative Declaration is hereby granted for the following project:

1. Project Title:	South Milpitas Boulevard Bridge
2. Lead Agency Name and Address:	City of Milpitas 455 E. Calaveras Boulevard Milpitas, CA 95035
3. Contact Person and Phone Number:	Lyhak Eam, P.E. Principal Civil Engineer City of Milpitas leam@milpitas.gov Tel: (408) 586-3349
4. Project Location and APNs:	South Milpitas Boulevard across the Penitencia East Channel 086-36-030, 086-36-041, 086-37-018, 086-37-039, and 086-37-040
5. Project Sponsor's Name & Address:	City of Milpitas 455 E Calaveras Boulevard Milpitas, CA 95035
6. General Plan Designation:	MMSP - Milpitas Metro Specific Plan
7. Zoning:	Park Open Space (086-37-018), R5 Urban Residential (086-37-039, and 086-37-040), R4 Multiple - Family Very High Density (086-36-030), and R3 Multiple - Family (086-36-041)
8. Description of Project:	The South Milpitas Boulevard Bridge project proposes to construct a bridge across Penitencia East Channel and associated roadway connections. The proposed bridge would serve

vehicles, pedestrians, and cyclists and would connect South Milpitas Boulevard on the north side of the channel with a new connector street to be constructed between Tarob Court and Sango Court on the south side of the channel. The proposed project would require demolition of the existing vacant office building located at 1831-1841 Tarob Court (APN 086-36-030) which is owned by the City of Milpitas.

FINDINGS

Pursuant to California Environmental Quality Act (CEQA) Guidelines Section 15063, an Initial Study for this project was conducted by environmental consultant David J. Powers, on behalf of the City. Through the Initial Study, it was determined that the proposed project would not result in any significant environmental impacts that could not be mitigated to a level of less than significant. Therefore, staff prepared a Mitigated Negative Declaration (MND) pursuant to CEQA Guidelines Section 15070. The IS/MND was available for public review from March 1, 2024 through April 1, 2024. The IS/MND and supporting documents are available at City Hall, 455 E Calaveras Blvd, Milpitas, CA 95035, and the City's website.

In connection with the adoption of the IS/MND, the record supports findings in accordance with CEQA Guidelines Section 15074, *et seq.* that:

1. The IS/MND reflects the independent judgment and analysis of the City, as lead agency under CEQA; and
2. Based upon the information contained in the IS/MND, any comments received thereon, and the whole record before the City, there is not a fair argument nor substantial evidence that the Project will have a significant effect on the environment.

MITIGATION MEASURES INCLUDED IN THE PROJECT TO REDUCE POTENTIALLY SIGNIFICANT EFFECTS TO A LESS THAN SIGNIFICANT LEVEL

A. AESTHETICS - The project will not have a significant impact on this resource; therefore, no mitigation is required.

B. AGRICULTURE AND FOREST RESOURCES - The project will not have a significant impact on this resource; therefore, no mitigation is required.

C. AIR QUALITY

MM AIR-3.1: The project shall implement the following Bay Area Air Quality Management District (BAAQMD) basic and additional construction mitigation measures during all applicable phases of construction:

- All exposed surfaces (e.g., parking areas, staging areas, soil piles, graded areas, and unpaved access roads) shall be watered at a frequency adequate to maintain minimum soil moisture of 12 percent (i.e., three times a day). Moisture content shall be verified by lab samples or moisture probe.
- All excavation, grading, and/or demolition activities shall be suspended when average wind speeds exceed 20 mph.
- The simultaneous occurrence of excavation, grading, and ground-disturbing construction activities on the same area at any one time shall be phased to reduce the amount of disturbed surfaces at any one time.
- Wind breaks (e.g., trees, fences) shall be installed on the windward side(s) of actively disturbed areas of construction. Wind breaks shall have at maximum 50 percent air porosity.
- Vegetative ground cover (e.g., fast-germinating native grass seed) shall be planted in disturbed areas as soon as possible and watered appropriately until vegetation is established.
- All roadways, driveways, and sidewalks to be paved shall be completed as soon as possible. Building pads shall be laid as soon as possible after grading unless seeding or soil binders are used.
- All vehicle speeds on unpaved roads shall be limited to 15 mph.
- All haul trucks transporting soil, sand, or other loose material off-site shall be covered.
- Site accesses to a distance of 100 feet from the paved road shall be treated with a six to 12-inch compacted layer of wood chips, mulch, or gravel.
- All trucks and equipment, including their tires, shall be washed off prior to leaving the site.
- All visible mud or dirt track-out onto adjacent public roads shall be removed using wet power vacuum street sweepers at least once per day. The use of dry power sweeping is prohibited.
- Sandbags or other erosion control measures shall be installed to prevent silt runoff to public roadways from sites with a slope greater than one percent.
- Idling times shall be minimized either by shutting equipment off when not in use or reducing the maximum idling time to two minutes (as required by the California airborne 14 toxics control measure Title 13, Section 2485 of California Code of Regulations [CCR]). Clear signage shall be provided for construction workers at all access points.
- All construction equipment shall be maintained and properly tuned in accordance with manufacturer's specifications. All equipment shall be checked by a certified mechanic and determined to be running in proper condition prior to operation.
- Post a publicly visible sign with the telephone number and person to contact at the Lead Agency regarding dust complaints. This person shall respond and take corrective action within 48 hours. BAAQMD's phone

number shall also be visible to ensure compliance with applicable regulations.

MM AIR-3.2: The project shall develop a plan demonstrating that the off-road equipment used on-site to construct the project would achieve a fleet-wide average 86 percent reduction in diesel particulate matter (DPM) exhaust emissions or greater.

- All diesel-powered off-road equipment, larger than 25 horsepower, operating on the site for more than two days continuously shall, at a minimum, meet U.S. Environmental Protection Agency (EPA) particulate matter emissions standards for Tier 4 Final engines.
- Where Tier 4 equipment is not available, all construction equipment larger than 25 horsepower used at the site for more than two continuous days shall meet U.S. EPA emissions standards for Tier 3 engines and include California Air Resources Board-certified Level 3 Diesel Particulate Filters or equivalent that altogether achieves a 86 percent reduction in exhaust emissions. Equipment that is electrically powered or uses non-diesel fuels would also meet this requirement.

D. BIOLOGICAL RESOURCES

MM BIO-1.1: **Worker Environmental Awareness Program.** All construction personnel working on the bridge will participate in a worker environmental awareness program. These personnel will be informed about the potential presence of native fish and northwestern pond turtles within and downstream from the project site. Prior to construction activities, a qualified biologist will instruct all construction personnel about (1) the description and status of these species; (2) the importance of their associated habitats; (3) a list of measures being taken to reduce impacts on these species during project construction; and (4) procedures to be followed if a northwestern pond turtle is observed by construction personnel in or near the project area during construction. If construction personnel observe any turtle in an area where it is at risk of injury or mortality due to the project, or where construction activity could prevent the turtle from returning to perennial habitat downstream from the project site, they will contact a qualified biologist immediately. All project activities that could impact the turtle will stop until the biologist has arrived at the site and determined whether the turtle is a northwestern pond turtle and (with any necessary USFWS approval) relocated the turtle to an appropriate location downstream.

MM BIO-1.2: **Preconstruction Survey and Fish Exclusion Prior to Dewatering Activities.** Prior to conducting dewatering activities, a qualified biologist will conduct a survey of the project area to look for fish and northwestern pond turtles. If any northwestern pond turtles are detected in areas where they are at risk of injury or mortality due to the project, or where construction activity could prevent the turtles from returning to perennial habitat downstream from

the project site, the biologist will relocate the turtles to suitable habitat in the perennial reach of Penitencia East Channel downstream. If northwestern pond turtle has been listed by the USFWS under FESA by the time construction occurs, the biologist will handle/relocate individual turtles only with USFWS approval.

During the preconstruction survey, the biologist will determine whether there is any potential for native fish to be present in the project area based on presence/absence and depth of water. If any fish are or have the potential to be present in the on-site segment of creek channel, and if continuous flow is present from the project site downstream to the perennial reach of creek, the biologist will use block nets to exclude fish from the reach to be dewatered. A block net will be placed at the upper end of the reach to be dewatered. Subsequently, qualified biologists will walk from the upper to lower end of the reach with a seine stretched across the channel to encourage fish to move out of the construction area. When the lower end of the construction area is reached, a second block net will be installed to isolate the construction reach. This procedure will be repeated as needed until no fish remain in the construction area. If surface water is not continuous between the project site and the perennial reach downstream, so that fish excluded from the site are unable to reach suitable habitat downstream, then the qualified biologist will capture native fish using appropriate methods and immediately release them in the perennial reach of the channel downstream.

MM BIO-1.3: **Maintenance of Flow through the Site.** In the unlikely event that fish are present within the channel when construction occurs, continuous flow will be maintained through the project site (e.g., in a temporary pipe) so that any fish upstream from the site are able to disperse downstream.

MM BIO-1.4: **Minimization and Shielding of Lighting.** All lighting for vehicular and pedestrian safety shall be minimized to the extent feasible (i.e., shall be no brighter than necessary for safety purposes), shall be oriented toward the bridge rather than outwards toward the Penitencia East Channel, and shall be fully shielded to block illumination from shining upward or outward toward the creek channel.

MM BIO-1.5: **Review of the Lighting Plan.** The lighting plan shall be reviewed by a qualified biologist prior to construction to ensure that the level of lighting would not result in adverse effects on wildlife in adjacent areas or attracting/disorienting nocturnal migrant birds.

MM BIO-1.6: In conformance with MMSP Policy SC 9.1 and SC 9.2, the following project-specific measures would be implemented to avoid impacts to nesting birds during construction and ensure compliance with the Migratory Bird Treaty Act (MBTA) and California Fish and Game Code:

- If feasible, construction activities shall be avoided during the nesting season (i.e., February 1 through August 31).
- Potential nesting substrate (e.g., bushes, trees, snags, grass, and suitable artificial surfaces) that would be impacted by development shall be removed during the non-breeding season (i.e., September 1 through January 31), to preclude nesting in the study area.
- If it is not feasible to schedule construction activities during the non-breeding season, preconstruction surveys for nesting birds shall be conducted by a qualified ornithologist to ensure that no nests will be disturbed during construction activities. This survey shall be conducted no more than seven days prior to the initiation of construction activities. During this survey, the ornithologist shall inspect all trees, shrubs, and other potential nesting habitats in and immediately adjacent to the study area for nests. If an active nest is found sufficiently close to work areas to be disturbed by these activities, the ornithologist shall determine the extent of a buffer zone to be established around the nest, typically 300 feet for raptors and 100 feet for other birds, to ensure that no nests of species protected by the MBTA or the California Fish and Game Code will be disturbed during construction activities.

MM BIO-2.1: **Work Period.** Construction work within the stream banks shall be restricted to the period of April 15 to October 15 (or as otherwise allowed by resource agency permits). Riparian restoration work (refer to MM BIO-2.4 below) using hand tools shall be completed within the wet season the same year following completion of the project.

MM BIO-2.2: **Work Area Delineation**. Permittee shall clearly show all riparian habitat on project plan sets and place flagging around the work limits within the stream, riparian, and wetland areas to prevent inadvertent impacts to areas not proposed to be disturbed by the project. Flagging shall be removed and appropriately disposed of within five calendar days of the completion of construction work. Access paths and staging areas shall be adequately fenced or flagged during the construction period to prevent damage to adjacent stream, riparian or wetland habitat.

MM BIO-2.3: **Prevention of Spread of Invasive Plant Species.** To prevent the spread of invasive weed infestations,

- All ground disturbing equipment used within the riparian corridors shall be washed (including tracks, and undercarriages) at a legally operating equipment yard both before and after being used at the site.
- All applicable construction materials used on-site, such as straw wattles, mulch, and fill material, shall be certified weed free.
- Invasive plant species with a "high" ecosystem impact rating by the California Invasive Plant Council (Cal-IPC; http://www.cal-ipc.org/paf/) shall be actively monitored and controlled in the first

three years following planting. The percent cover of "high" invasive plant species shall be maintained at less than ten percent of the total plant cover in areas disturbed by project work. A qualified ecologist shall assess the type, distribution, and abundance of invasive plant species and recommend effective control measures. Invasive plants shall be removed from the project site on an as-needed basis.

MM BIO-2.4: **Revegetation of Temporary Impact Areas.** Temporary impact areas within the bed and banks of the channel shall be restored to preconstruction conditions or better. Restoration shall include restoring the topography of temporary impact areas to preconstruction conditions to the extent feasible, bank stabilization, and reestablishment of appropriate vegetation. A habitat-appropriate, weed-free native seed mix or propagated plants shall be applied or installed. The species composition shall be developed in coordination with Valley Water. The project proponent shall not plant, seed, or otherwise introduce invasive exotic plant species. Revegetation shall be completed as soon as possible after grading at the project site is completed. Seeding placed between October 15 and April 15 shall be covered with broadcast straw, jute netting, coconut fiber blanket, or similar erosion control blanket. Erosion control products with monofilament or woven plastic strands shall not be used. The revegetation will be considered successful if the vegetative cover in the temporary impact areas reaches 75% of the existing baseline cover, excluding species rated as "high" by Cal-IPC.

A qualified ecologist will monitor conditions in the temporary riparian and stream/marsh impact areas for a minimum of 3 years, or until the success criteria for vegetation cover are attained, whichever is later. Prior to commencement of construction, the ecologist will establish at least four permanent photographic documentation stations (i.e., one station near each corner of the bridge) to provide representative views of vegetation cover. The locations of the photographic documentation stations will be recorded using a GPS, and the direction of the photographs documented with a compass. The ecologist will prepare site maps with the photo-documentation points clearly marked for the project site. Prior to commencement of construction, the ecologist will photographically document the pre-project condition of the project site from each documentation station and estimate the vegetation cover at each station. Following implementation of the project, including any seeding or plant installation, a qualified ecologist will visit the site at least once in late spring to photographically document the postconstruction condition of the project site and estimate vegetation cover. The ecologist will report the results of these inspections (including the assessment of overall vegetation cover described in this measure and the assessment of invasive plants described in Mitigation Measure BIO-5) in a brief memo following each year's site visit. Monitoring and maintenance may be extended if the success criteria are not attained by year 3. Remedial measures to be considered include, but are not limited to, supplemental planting or seeding,

increased maintenance frequency, increased invasive plant removal activities, or alteration of maintenance strategies.

E. CULTURAL RESOURCES

MM CUL-2.1: Prior to the issuance of any grading permits, the project applicant shall retain a qualified archaeologist and engage a Native American monitor approved by Tamien Nation to be present at the site during all ground disturbing activities. Submit a copy of the agreement to the Director of Engineering or the Director's designee.

MM CUL-2.2: Pursuant to CEQA Guidelines 15064.5 (f), if potentially significant cultural resources are discovered during ground-disturbing activities associated with project preparation, construction, or completion, work shall halt in that area until a qualified archaeologist can assess the significance of the find, and, if necessary, develop appropriate treatment measures in consultation with Santa Clara County, Tamien Nation, and other appropriate agencies and interested parties. If such resources are found to be Native American, the treatment measures shall obtain approval from Tamien Nation. A qualified archaeologist shall follow accepted professional standards in recording any find including submittal of the standard Department of Parks and Recreation (DPR) Primary Record forms (Form DPR 523) and locational information to the California Historical Resources Information Center office (Northwest Information Center). The consulting archaeologist shall also evaluate such resources for significance per California Register of Historical Resources eligibility criteria (Public Resources Code Section 5024.1; Title 14 CCR Section 4852). If the archaeologist determines that the find does not meet the CEQA standards of significance, construction shall proceed. In the event the archaeologist determines that further information is needed to evaluate significance, the Engineering Department staff shall be notified and a data recovery plan shall be prepared. If such resources are found to be Native American, a Tamien Nation Tribal representative shall be engaged for evaluation and the data recovery plan shall be prepared in consultation with Tamien Nation.

MM CUL-3.1: In the event that human remains are encountered, the City shall halt work in the immediate area and contact the Santa Clara County coroner. The coroner will make a determination as to whether the remains are Native American. If the remains are believed to be Native American, the coroner will contact the Native American Heritage Commission (NAHC) which will designate the Most Likely Descendants (MLD). The MLD will inspect the remains and make a recommendation for the respectful treatment of the remains and related burial goods.

F. ENERGY - The project will not have a significant impact on this resource; therefore, no mitigation is required.

G. GEOLOGY AND SOILS

MM GEO-6.1: A qualified paleontologist shall attend a preconstruction meeting to ensure construction workers are able to identify potential paleontological resources. In the event fossils are encountered, construction shall be temporarily halted. The City's Engineering Department shall be notified immediately, a qualified paleontologist shall evaluate the fossils, and steps needed to photo document and recover the fossils shall be taken.

H. GREENHOUSE GAS EMISSIONS - The project will not have a significant impact on this resource; therefore, no mitigation is required.

I. HAZARDS AND HAZARDOUS MATERIALS

MM HAZ-2.1: Prior to demolition and grading, a Risk Management Plan (RMP) shall be prepared to protect the health and safety of construction workers and site users adjacent to construction activities. The RMP shall be implemented during all phases of construction and shall include engineering controls, monitoring, and security measures to prevent unauthorized entry to the construction site and to reduce hazards outside of the construction site. The RMP shall address the possibility of encountering subsurface hazards and include procedures to protect workers and the public. The RMP shall also include procedures for managing soils and groundwater removed from the site to ensure that any excavated soils and/or dewatered groundwater with contaminants are stored, managed, and disposed of in accordance with applicable regulations and permits. Protocols for the handling, transport, and disposal of both known and previously unidentified hazardous materials that may be encountered during project development shall be specified. If prescribed exposure levels are exceeded, personal protective equipment shall be required for workers in accordance with Occupational Safety and Health Administration (OSHA) regulations. Finally, the RMP shall also include procedures for the use, storage, disposal, of hazardous materials used during construction activities to prevent the accidental release of these materials into the environment during construction.

MM HAZ-2.2: To reduce the potential for construction workers and nearby sensitive receptor to be exposed to hazardous materials (asbestos containing materials [ACMs] and lead-based paint), the following measures shall be incorporated at all times during the construction of the project.

- In conformance with state and local laws, a visual inspection/pre-demolition survey, and possible sampling, shall be conducted prior to the demolition of on-site building(s) to determine the presence of asbestos-containing materials and/or lead-based paints.
- Prior to demolition, all building materials containing lead-based paint shall be removed in accordance with the California Division of Occupational Safety and Health Lead in Title 8, California Code of

Regulations, Section 1532.1, including employee training, employee air monitoring, and dust control. Any debris or soil containing lead-based paint or coatings shall be disposed of at landfills that meet acceptance criteria for the type of lead being disposed.

- All potentially friable asbestos-containing materials shall be removed in accordance with National Emission Standards for Hazardous Air Pollutants guidelines prior to demolition or renovation activities that may disturb asbestos-containing materials. All demolition activities shall be undertaken in accordance with the California Division of Occupational Safety and Health standards contained in Title 8, California Code of Regulations, Section 1529, to protect workers from asbestos exposure.
- A registered asbestos abatement contractor shall be retained to remove and dispose of asbestos-containing materials identified in the asbestos survey performed for the site in accordance with the standards stated above.
- Materials containing more than one-percent asbestos are also subject to Bay Area Air Quality Management District regulations. Removal of materials containing more than one-percent asbestos shall be completed in accordance with Bay Area Air Quality Management District requirements and notifications.
- Based on California Division of Occupational Safety and Health rules and regulations, the following conditions are required to limit impacts to construction workers.
    - Prior to commencement of demolition activities, a building survey, including sampling and testing, shall be completed to identify and quantify building materials containing lead-based paint.
    - During demolition activities, all building materials containing lead-based paint shall be removed in accordance with the California Division of Occupational Safety and Health Lead in Construction Standard, Title 8, California Code of Regulations, Section 1532.1, including employee training, employee air monitoring and dust control.
    - Any debris or soil containing lead-based paint or coatings shall be disposed of at landfills that meet acceptance criteria for the type of waste being disposed.

J. HYDROLOGY AND WATER QUALITY - The project will not have a significant impact on this resource; therefore, no mitigation is required.

K. LAND USE AND PLANNING - The project will not have a significant impact on this resource; therefore, no mitigation is required.

L. MINERAL RESOURCES - The project will not have a significant impact on this resource; therefore, no mitigation is required.

M. **NOISE –** The project will not have a significant impact on this resource; therefore, no mitigation is required.

N. **POPULATION AND HOUSING** - The project will not have a significant impact on this resource; therefore, no mitigation is required.

O. **PUBLIC SERVICES** - The project will not have a significant impact on this resource; therefore, no mitigation is required.

P. **RECREATION -** The project will not have a significant impact on this resource; therefore, no mitigation is required.

Q. **TRANSPORTATION/TRAFFIC** - The project will not have a significant impact on this resource; therefore, no mitigation is required.

R. **TRIBAL CULTURAL RESOURCES -** As described in Section 4.5 Cultural Resources, the project will be required to have a Tribal Monitor present during ground disturbing activities (MM CUL-2.1). In addition, the project would implement MM CUL-2.2 and MM CUL-3.1 under Impact CUL-2 and Impact CUL-3 in Section 4.5 Cultural Resources to reduce the potential for adverse impacts to buried cultural resources (including TCRs) to a less than significant level.

S. **UTILITIES AND SERVICE SYSTEMS** - The project will not have a significant impact on this resource; therefore, no mitigation is required.

T. **WILDFIRE –** The project site is not located in or near state responsibility areas or lands classified as very high fire hazard severity zones. Accordingly, the project would not result in wildfire impacts.

U. **MANDATORY FINDINGS OF SIGNIFICANCE** – With the implementation of the mitigation measures identified above, the project would not degrade the quality of the environment, substantially affect the biological resources, or eliminate important examples of California history or prehistory. The mitigation measures would also ensure that the project's contribution to cumulative impacts would not be cumulatively considerable, and the project would not cause substantial adverse effects on human beings, either directly or indirectly.

PUBLIC REVIEW PERIOD

The Draft MND public review period ended April 1, 2024, at 5:00 p.m. Written responses to comments received during the public review period were prepared by City staff. Minor revisions to the MND were made to reflect concerns raised during the public review period. The revisions do not constitute a "substantial revision" pursuant to CEQA Guidelines §15073.5 and recirculation of the MND is not required.

Jay Lee, Planning Director Date

Initial Study

South Milpitas Boulevard Bridge

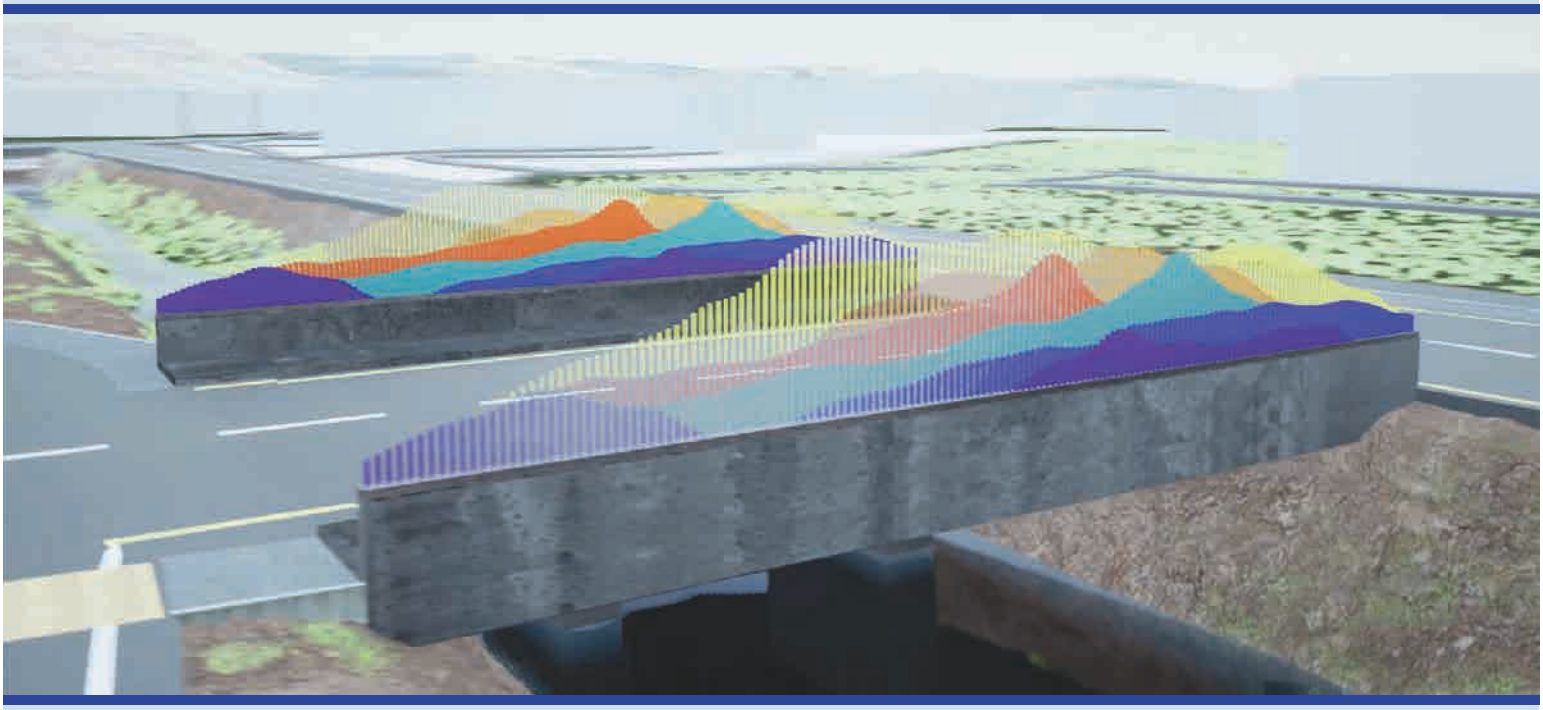

Prepared by

CITY OF MILPITAS
CALIFORNIA
INCORPORATED
JANUARY 26, 1954

In Consultation with

DAVID J. POWERS
& ASSOCIATES, INC.
ENVIRONMENTAL CONSULTANTS & PLANNERS

February 2024

TABLE OF CONTENTS

Section 1.0 Introduction and Purpose 1
1.1 Purpose of the Initial Study 1
1.2 Background 1
1.3 Public Review Period 2
1.4 Consideration of the Initial Study and Project 2
1.5 Notice of Determination 2
Section 2.0 Project Information 3
2.1 Project Title 3
2.2 Lead Agency Contact 3
2.3 Project Applicant 3
2.4 Project Location 3
2.5 Assessor's Parcel Number 7
2.6 General Plan Designation and Zoning District 7
2.7 Project-Related Approvals, Agreements, and Permits 7
Section 3.0 Project Description 8
3.1 Project Overview 8
3.2 Project Description 8
Section 4.0 Environmental Setting, Checklist, and Impact Discussion 14
4.1 Aesthetics 15
4.2 Agriculture and Forestry Resources 20
4.3 Air Quality 24
4.4 Biological Resources 41
4.5 Cultural Resources 61
4.6 Energy 68
4.7 Geology and Soils 75
4.8 Greenhouse Gas Emissions 84
4.9 Hazards and Hazardous Materials 92
4.10 Hydrology and Water Quality 103
4.11 Land Use and Planning 114
4.12 Mineral Resources 117
4.13 Noise 119
4.14 Population and Housing 132
4.15 Public Services 135

4.16 Recreation 140
4.17 Transportation 143
4.18 Tribal Cultural Resources 154
4.19 Utilities and Service Systems 157
4.20 Wildfire 165
4.21 Mandatory Findings of Significance 167
Section 5.0 References 174
Section 6.0 Lead Agency and Consultants 180
6.1 Lead Agency 180
6.2 Consultants 180
Section 7.0 Acronyms and Abbreviations 182

Figures

Figure 2.4-1: Regional Map 4
Figure 2.4-2: Vicinity Map 5
Figure 2.4-3: Aerial Photograph and Surrounding Land Uses 6
Figure 3.2-1: Bridge Section 9
Figure 3.2-2: Bridge Elevation 10
Figure 3.2-3: Proposed Roadway Connection 12
Figure 4.3-1: Off-Site Receptors and Maximally Exposed Individual 37
Figure 4.4-1: Study Area 47
Figure 4.4-2: Study Area Habitats and Impacts 48
Figure 4.13-1: Noise Measurement Locations 125
Figure 4.21-1: Project Site and Nearby TAC and PM2.5 Sources 171

Tables

Table 4.3-1: BAAQMD Air Quality Significance Thresholds 30
Table 4.3-2: Project Construction Period Emissions 31
Table 4.3-3: Project Operational Period Emissions 33
Table 4.3-4: Unmitigated Construction Risk Impacts at Off-Site MEI 38
Table 4.3-5: Operational Risk Impacts at Off-Site MEI 39
Table 4.7-1 Faults Nearest to Project Site 78
Table 4.8-1: Calculated GHG Emissions of Existing Development and Proposed Project 90
Table 4.13-1: Groundborne Vibration Impact Criteria 120
Table 4.13-2: Land Use Compatibility Guidelines for Community Noise 123

Table 4.13-3: Calculated Construction Noise Levels at Surrounding Land Uses[1] 128
Table 4.13-4: Vibration Source Levels for Construction Equipment at Representative Distances ... 130
Table 4.17-1: VMT Within the Project Vicinity 150
Table 4.17-2: Study Intersections Level of Service Summary 153
Table 4.21-1: Cumulative Community Risk Impacts at Off-Site MEI 172

Appendices

Appendix A: Air Quality and GHG Assessment by Illingworth & Rodkin, Inc., dated 2021 and 2023
Appendix B: Biological Report by H.T. Harvey & Associates, dated 2023
Appendix C: Bridge Design Geotechnical Report by ENGEO, dated 2017
Appendix D: Hydraulic Analysis by Schaaf & Wheeler, dated 2020
Appendix E: Noise and Vibration Assessment by Illingworth & Rodkin, Inc., dated 2021
Appendix F: Transportation Analysis by Hexagon Transportation Consultant Inc, dated 2021

SECTION 1.0 INTRODUCTION AND PURPOSE

1.1 PURPOSE OF THE INITIAL STUDY

The City of Milpitas, as the Lead Agency, has prepared this Initial Study for the South Milpitas Boulevard Bridge project in compliance with the California Environmental Quality Act (CEQA), the CEQA Guidelines (California Code of Regulations §15000 et. seq.) and the regulations and policies of the City of Milpitas, California.

The project proposes to construct a bridge across Penitencia East Channel. The proposed bridge would serve vehicles, pedestrians, and cyclists and would connect South Milpitas Boulevard on the north side of the channel with a new connector street to be constructed by the City between Tarob Court and Sango Court on the south side of the channel. The proposed project would require the demolition of an existing vacant office building located at 1831-1841 Tarob Court, Milpitas, CA 95035. This Initial Study evaluates the environmental impacts that might reasonably be anticipated to result from implementation of the proposed project.

1.2 BACKGROUND

1.2.1 Transit Area Specific Plan

On June 3, 2008, the City Council approved the Transit Area Specific Plan (TASP). The TASP provided for redevelopment of an approximately 437-acre area in the southern portion of the City around the new Milpitas Transit Center, which opened in June 2020 and includes regional transit connections via Bay Area Rapid Transit (BART), the Santa Clara Valley Transportation Authority (VTA) Light Rail and bus systems, and Alameda County (AC) Transit express bus service. The TASP includes development standards, goals and policies guiding development within the plan area. Because of the physical characteristics of the area, including major streets, railroads and creeks, the plan also established subdistricts with specific goals and policies to accommodate those unique characteristics.

The impacts from planned development under the TASP are evaluated in the Milpitas TASP Final Environmental Impact Report (FEIR), dated May 2008, as amended in 2011.

1.2.2 Milpitas Metro Specific Plan

On February 7, 2023, the City adopted the Milpitas Metro Specific Plan (MMSP). The MMSP is an update to and replaces the TASP, adopted in 2008 and described above. The Metro Plan increases the Plan Area from approximately 437 acres to approximately 510 gross acres and includes annexations on the east and west sides of the original Plan Area. The purpose of the MMSP is to make better and safer connections for pedestrians and cyclists, improve connectivity to nearby neighborhoods, prioritize affordable housing development, and provide commercial opportunities that will expand the City’s business and job base over the next 20 years. The impacts from planned development under the MMSP are evaluated in the Milpitas Metro Specific Plan Supplemental EIR (SEIR).

1.3 PUBLIC REVIEW PERIOD

Publication of this Initial Study (and attached Mitigated Negative Declaration (MND)) marks the beginning of a 30-day public review and comment period. During this period, the Initial Study/MND will be available to local, state, and federal agencies and to interested organizations and individuals for review. Written comments concerning the environmental review contained in this Initial Study during the 30-day public review period should be sent to:

Lyhak Eam, P.E., Principal Civil Engineer
City of Milpitas
455 E. Calaveras Boulevard
Milpitas, CA 95035
Leam@milpitas.gov

1.4 CONSIDERATION OF THE INITIAL STUDY AND PROJECT

Following the conclusion of the public review period, the City of Milpitas will review the comments received, evaluate and incorporate the comments as needed prior to presenting the Initial Study/Mitigated Negative Declaration (MND) to the City Council for adoption. The City shall consider the Initial Study/MND together with any comments received during the public review process. Upon adoption of the MND, the City may proceed with project approval actions.

1.5 NOTICE OF DETERMINATION

If the project is approved, the City of Milpitas will file a Notice of Determination (NOD), which will be available for public inspection and posted within 24 hours of receipt at the County Clerk's Office for 30 days. The filing of the NOD starts a 30-day statute of limitations on court challenges to the approval under CEQA (CEQA Guidelines Section 15075(g)).

SECTION 2.0 PROJECT INFORMATION

2.1 PROJECT TITLE

South Milpitas Boulevard Bridge

2.2 LEAD AGENCY CONTACT

Lyhak Eam, P.E.; Principal Civil Engineer
City of Milpitas
455 E. Calaveras Boulevard
Milpitas, CA 95035
Leam@milpitas.gov
Tel: (408) 586-3349

2.3 PROJECT APPLICANT

City of Milpitas
Public Works Department
455 E. Calaveras Boulevard
Milpitas, CA 95035

2.4 PROJECT LOCATION

The project is located in the City of Milpitas at the southern terminus of South Milpitas Boulevard and includes portions of Assessor's Parcel Numbers (APNs) 086-36-030, 086-36-041, 086-37-018, 086-37-039, and 086-37-040.

The project location is shown on the following figures:

- Figure 2.4-1: Regional Map
- Figure 2.4-2: Vicinity Map
- Figure 2.4-3: Aerial Photograph and Surrounding Land Uses

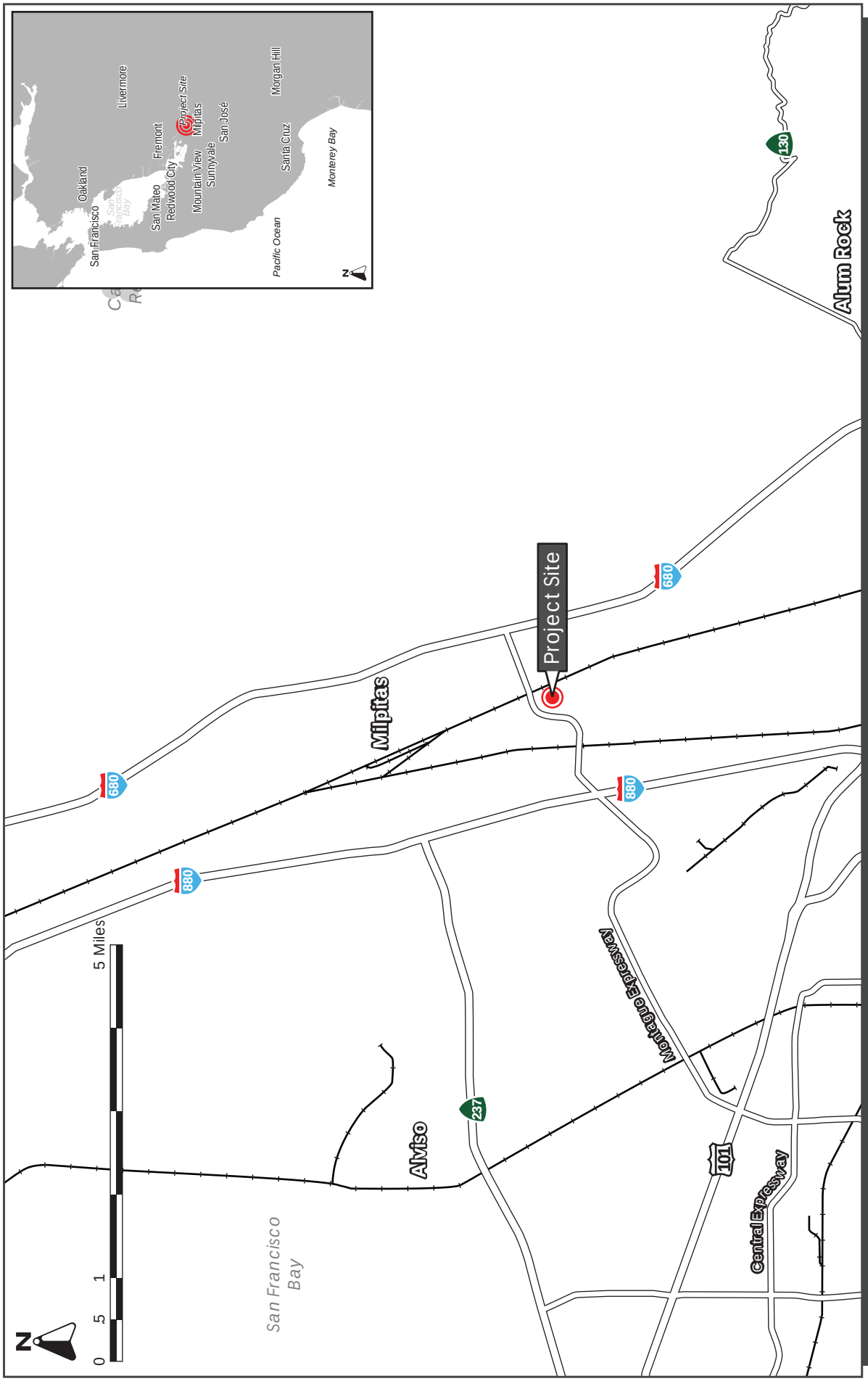

REGIONAL MAP

FIGURE 2.4-1

FIGURE 2.4-2

VICINITY MAP

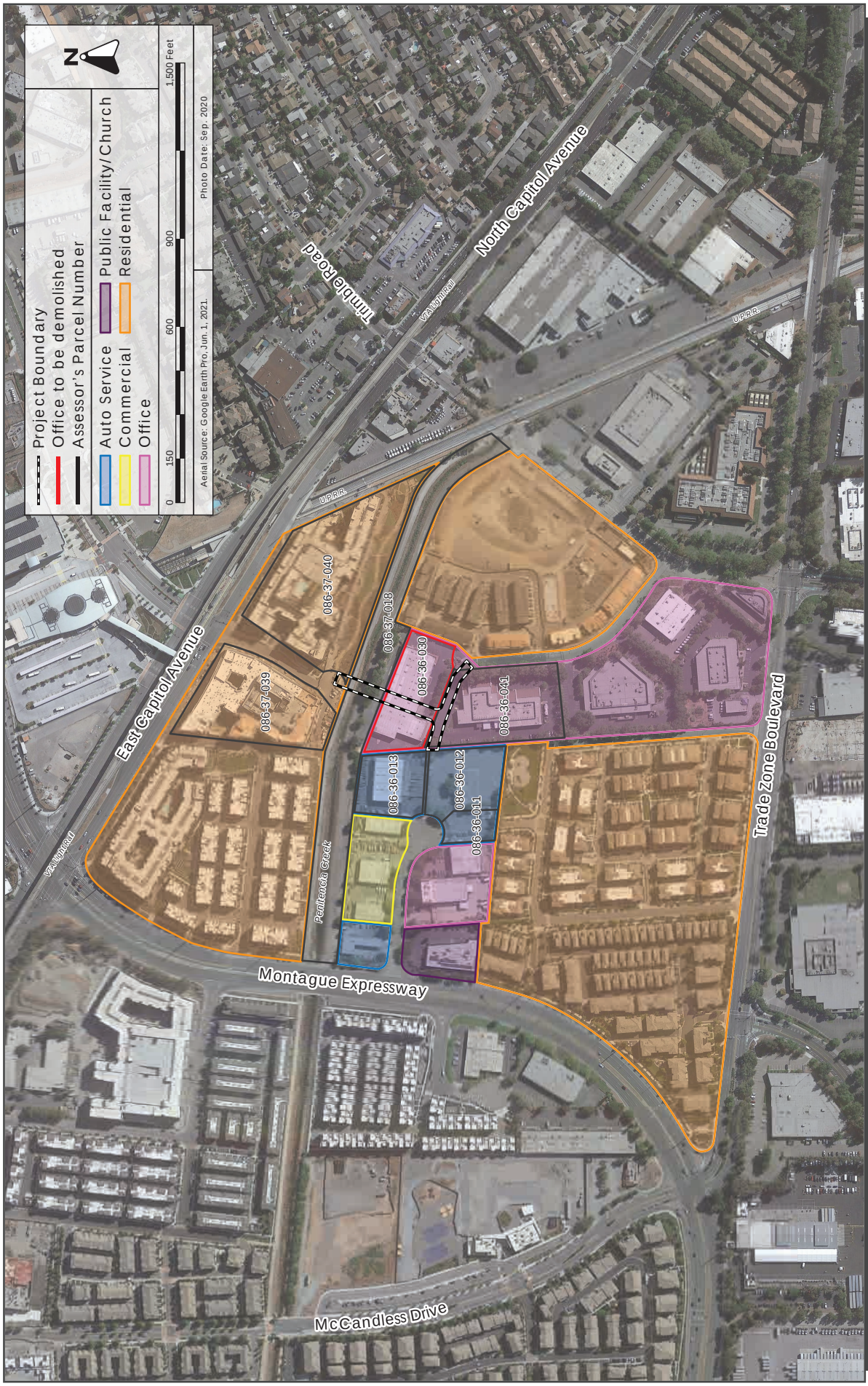

FIGURE 2.4-3

AERIAL PHOTOGRAPH AND SURROUNDING LAND USES

2.5 ASSESSOR'S PARCEL NUMBER

As shown on Figure 2.4-3, the proposed bridge and roadway alignment would intersect five parcels, including Assessor's Parcel Numbers (APNs), 086-36-030, 086-36-041, 086-37-018, 086-37-039, and 086-37-040.

2.6 GENERAL PLAN DESIGNATION AND ZONING DISTRICT

The parcels affected by the project have a General Plan land use designation of MMSP - Milpitas Metro Specific Plan. In the area of the proposed bridge, Penitencia East Channel (APN: 086-37-018) is zoned Park Open Space; the two parcels (APNs 086-37-039 and 086-37-040) north of the channel are zoned R5 (Urban Residential) and the parcels (APNs 086-36-030 and 086-36-041) south of the channel are respectively zoned R4 (Multi-Family-Very High Density) and R3 (Multi-Family).

2.7 PROJECT-RELATED APPROVALS, AGREEMENTS, AND PERMITS

2.7.1 Lead Agency (City of Milpitas)

- Project Approval by City Council

2.7.2 Responsible Agencies

- United States Army Corps of Engineers
  - Section 404 Permit
- California Department Fish & Wildlife:
  - Section 1600 Permit
- Regional Water Quality Control Board:
  - 401 Certification/Waste Discharge Permit
- Valley Water:
  - Encroachment permit
  - Joint Use Agreement
- South Bay Water Recycling:
  - Recycled Water Use Permit

SECTION 3.0 PROJECT DESCRIPTION

3.1 PROJECT OVERVIEW

The South Milpitas Boulevard Bridge project proposes to construct a bridge across Penitencia East Channel and associated roadway connections consistent with the vision of the TASP and MMSP. The vehicular bridge and road network are part of the Metro Area Specific Plan circulation infrastructure plan to provide vehicular, bicycle, and pedestrian connectivity between Metro development, Milpitas BART Station/Milpitas Transit Station, Great Mall and surrounding residential developments. The proposed bridge would connect South Milpitas Boulevard on the north side of the channel with a new connector street to be constructed between Tarob Court and Sango Court on the south side of the channel. The proposed project would require demolition of the existing vacant office building located at 1831-1841 Tarob Court, Milpitas, CA 95035 (APN 086-36-030), which is owned by the City of Milpitas. The project also includes sidewalk, curb and gutter, bio retention and extension of existing 12-inch potable water and 8-inch recycled water lines from S. Milpitas Boulevard to Sango/Tango Court connection. The extension of these water lines would improve the water system within this area by creating a loop system. The project would be funded by TASP impact Fees.

3.2 PROJECT DESCRIPTION

3.2.1 Bridge

The proposed bridge would be approximately 40 feet long and 48 feet wide. The bridge would include an 11-foot-wide vehicle lane, a six-foot wide bicycle lane, and a six-foot wide sidewalk in each direction. The railing of the bridge would consist of vertical parallel steel plates mounted on concrete barriers. The steel plates would range in height from three to 12 feet, be illuminated from below and serve as decorative elements. Additionally, potable water and recycled water lines would be attached to the bridge. The bridge section is shown on Figure 3.2-1.

The bridge would be clear-span, meaning that no permanent structures or fill would be placed within Penitencia East Channel that is owned and maintained by Santa Clara Valley Water District. All abutments and support structures associated with the proposed bridge would occur outside the top of banks of Penitencia East Channel. The bridge would be supported by cast-in-place reinforced concrete abutments supported by cast-in-drilled-hole piers. There would be a total of 16 piers, seven for each abutment. Each of the piers would be 24 inches in diameter and would be drilled to a depth of 60 feet below the ground surface (bgs). The bridge elevation is shown on Figure 3.2-2.

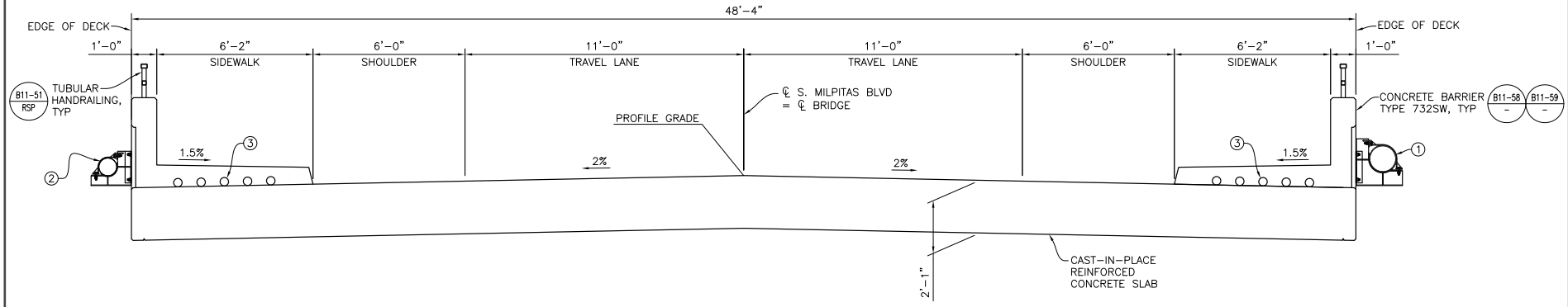

LEGEND:

1. 12" DIA. WATER, SEE CIVIL PLANS
2. 8" DIA. RECYCLED WATER, SEE CIVIL PLANS
3. 5-4" DIA. FUTURE UTILITY OPENING

ALL FUTURE UTILITY OPENINGS SHALL CONSIST OF SCH 40 PVC AND SHALL HAVE EXPANSION JOINTS AT BOTH ABUTMENT JOINTS,

SEE "UTILITY DUCT EXPANSION JOINT" ON B11-58 / -

ALL FUTURE UTILITY OPENINGS TO BE FURNISHED AND INSTALLED BY BRIDGE CONTRACTOR, UNLESS NOTED OTHERWISE.

Source: Cornerstone Structural Engineering Group, Inc., April 1, 2020.

BRIDGE SECTION

FIGURE 3.2-1

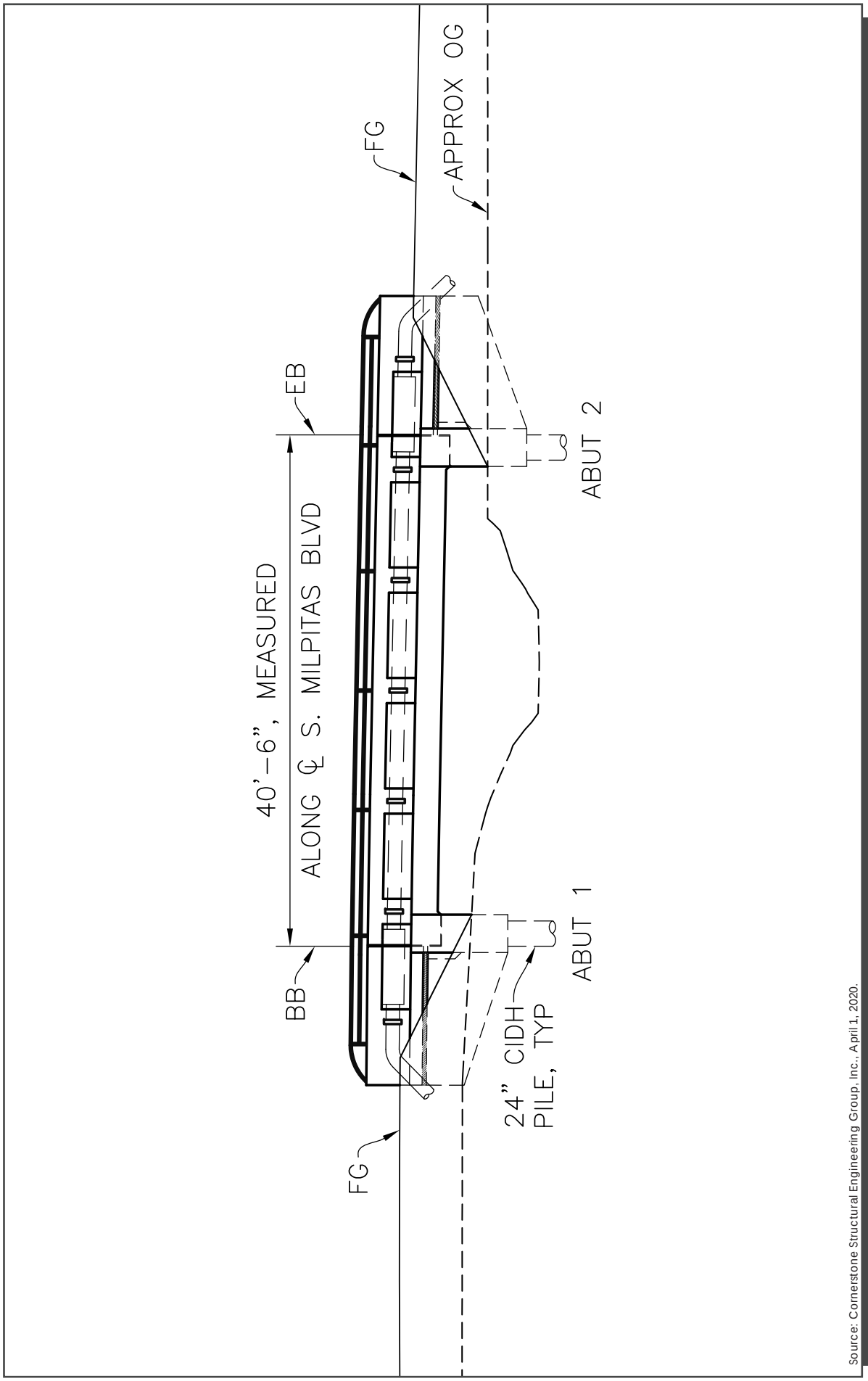

Source: Cornerstone Structural Engineering Group, Inc., April 1, 2020.

BRIDGE ELEVATION

FIGURE 3.2-2

3.2.2 Circulation

The project would extend South Milpitas Boulevard approximately 250 feet from its current termination point to a new intersection and construct a new connector street between the termination points of Tarob Court and Sango Court (as shown on Figure 3.2-3). The connecting roadways would have a 54-foot right of way that includes 11-foot-wide travel lanes for both vehicles and bicycles going in each direction, an 8-foot-wide vehicle parking aisle on one side of the street, and 7-foot-wide planting strip and 5-foot-wide sidewalks on both sides of the street. The connecting roadways would consist of asphalt concrete surfacing.

South Milpitas Boulevard between East Capitol Avenue and the Sango Court/Tarob Court roadway connection would be a residential street with a speed limit of 25 miles per hour. Both the South Milpitas Boulevard/Tarob Court/Sango Court intersection and South Milpitas Boulevard/Vineyard Avenue intersection would be stop sign controlled.

The proposed project would also construct connections to the existing Valley Water maintenance roads, which are located on both sides of Penitencia East Channel.

3.2.3 Right-of-Way and Temporary Construction Easements

The proposed bridge would require a permanent easement from Valley Water. The City of Milpitas would provide the right of way for the proposed roadway connection at the parcel located at 1831-1841 Tarob Court, Milpitas, CA 95035 (APN: 086-36-030). The City is currently in negotiations to acquire the right of way from the parcel located at 1905 Tarob Court, Milpitas, CA 95035 (APN 86-036-041).

3.2.4 Construction

In addition to construction of the proposed bridge and roadway connection, the proposed project would require demolition of the approximately 41,307-square-foot existing office building and associated site improvements (e.g., paved parking and landscaping) located at 1831-1841 Tarob Court, Milpitas, CA 95035. The project would also demolish the existing site improvements (e.g., paved parking and landscaping) located within the right of way acquired from the parcel located at 1905 Tarob Court, Milpitas, CA 95035 (APN 86-036-041). A total of approximately 20 trees would be removed during project construction. The trees removed by the project would be replaced in accordance with the Milpitas Tree Protection Ordinance (MMC Section X-2-7.01).

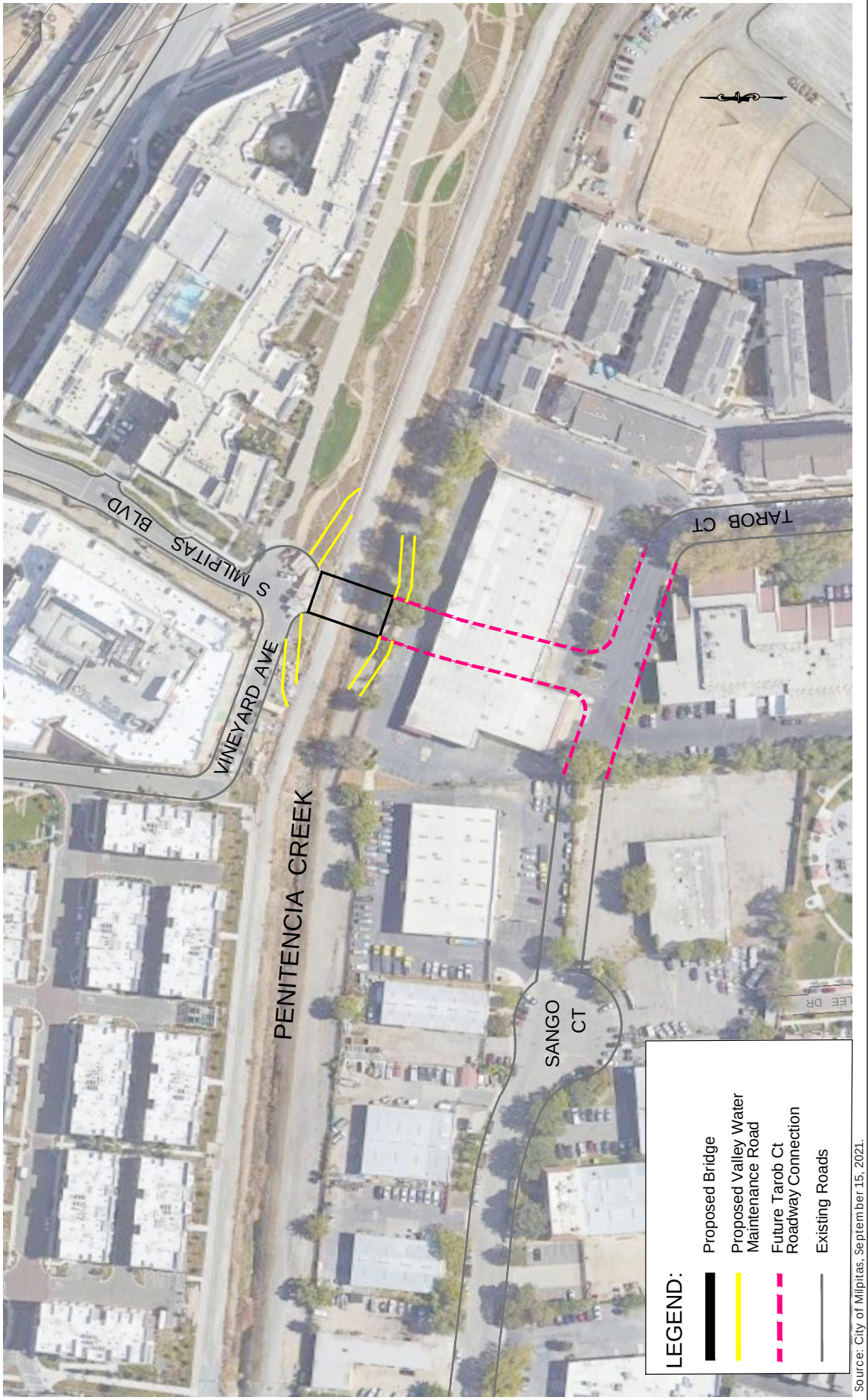

Source: City of Milpitas, September 15, 2021.

FIGURE 3.2-3

PROPOSED ROADWAY CONNECTION

Project construction would take approximately 18 months to complete. Temporary access into the creek channel may be necessary during bridge construction and falsework may need to be placed in the creek bed during construction, potentially requiring dewatering or diversion of the creek if water is present when construction occurs; therefore, as required by Valley Water, bridge construction would take place in a single dry season from June 15 to October 15, 2026. Demolition of the existing building and construction of the proposed roadway connection is anticipated to occur simultaneously with the bridge construction, estimated between Spring 2026 and Summer 2027. Construction work would occur between 7:00 a.m. and 7:00 p.m., Monday through Sunday, excluding holidays consistent with the City's Municipal Code Section V-213-3(b). No temporary roadway closures are anticipated during project construction. As required under the National Pollutant Discharge Elimination System (NPDES) Construction General Permit and Regional Water Quality Control Board (RWQCB) Municipal Regional Stormwater Permit (MRP), the proposed project would implement water quality control measures during and after project construction activities to protect Penitencia East Channel and other receiving waters downstream of the project site.

SECTION 4.0 ENVIRONMENTAL SETTING, CHECKLIST, AND IMPACT DISCUSSION

This section presents the discussion of impacts related to the following environmental subjects in their respective subsections:

4.1	Aesthetics	4.12	Mineral Resources
4.2	Agriculture and Forestry Resources	4.13	Noise
4.3	Air Quality	4.14	Population and Housing
4.4	Biological Resources	4.15	Public Services
4.5	Cultural Resources	4.16	Recreation
4.6	Energy	4.17	Transportation
4.7	Geology and Soils	4.18	Tribal Cultural Resources
4.8	Greenhouse Gas Emissions	4.19	Utilities and Service Systems
4.9	Hazards and Hazardous Materials	4.20	Wildfire
4.10	Hydrology and Water Quality	4.21	Mandatory Findings of Significance
4.11	Land Use and Planning		

The discussion for each environmental subject includes the following subsections:

- **Environmental Setting –** This subsection 1) provides a brief overview of relevant plans, policies, and regulations that compose the regulatory framework for the project and 2) describes the existing, physical environmental conditions at the project site and in the surrounding area, as relevant.
- **Impact Discussion –** This subsection 1) includes the recommended checklist questions from Appendix G of the CEQA Guidelines to assess impacts and 2) discusses the project's impact on the environmental subject as related to the checklist questions. For significant impacts, feasible mitigation measures are identified. "Mitigation measures" are measures that will minimize, avoid, or eliminate a significant impact (CEQA Guidelines Section 15370). Each impact is numbered to correspond to the checklist question being answered. For example, Impact BIO-1 answers the first checklist question in the Biological Resources section. Mitigation measures are also numbered to correspond to the impact they address. For example, MM BIO-1.3 refers to the third mitigation measure for the first impact in the Biological Resources section.

4.1 AESTHETICS

4.1.1 Environmental Setting

4.1.1.1 *Regulatory Framework*

State

Streets and Highway Code Sections 260 through 263

The California Scenic Highway Program (Streets and Highway Code, Sections 260 through 263) is managed by the California Department of Transportation (Caltrans). The program is intended to protect and enhance the natural scenic beauty of California highways and adjacent corridors through special conservation treatment.[1]

In Santa Clara County, there is one state-designated scenic highway, State Route (SR) 9 from the Santa Cruz County line to the Los Gatos City Limit. Eligible State Scenic Highways in Santa Clara County (not officially designated) include: 1) SR 17 from the Santa Cruz County line to SR 9, 2) SR 35 from Santa Cruz County line to SR 9, 3) Interstate 280 from the San Mateo County line to SR 17, and 5) the entire length of SR 152 within the County. There are no state-designated scenic highways in Milpitas. The nearest officially designated State Scenic Highway to Milpitas is Interstate 680 (I-680), from Mission Boulevard to the Contra Costa County line.

Local

City of Milpitas General Plan 2040

Hillsides, ridges, visually significant vegetation, and other elements are crucial in shaping the City's scenic identity. Major entryways to the City (e.g., southbound I-880 at Dixon Landing Road) also shape the City's scenic identity. The following policies in the City's General Plan have been adopted for the purpose of reducing or avoiding impacts related to aesthetics and are applicable to the project.

Policies	Description
Policy CD 3-3	Ensure that new development and redevelopment reinforces desirable elements of its neighborhood, district, or center, including architectural style, scale, and setback patterns.
Policy CD 3-4	Strengthen the identity of individual neighborhoods, districts, and centers through the use of entry monuments, flags, street signs, themed streets, natural features, landscaping, and lighting.

Streetscape Master Plan

The City of Milpitas Streetscape Master Plan adopted September 19, 2000, contains guidelines and recommendations for the varied streetscape conditions that exist or can be foreseen in the future and

[1] California Department of Transportation. "Scenic Highways." Accessed January 9, 2024. https://dot.ca.gov/programs/design/lap-landscape-architecture-and-community-livability/lap-liv-i-scenic-highways

is based on the understanding that attractive streetscapes are a benefit to the community – economically, environmentally, visually, and psychologically.

City of Milpitas Metro Specific Plan

The MMSP adopted in February 2023 has the following policies for the purpose of avoiding or mitigating aesthetic-related impacts resulting from planned development within the MMSP area, including the following:

Policies	Description
Policy SD 2.11	Amenity zones shall be located between the street and the Pedestrian Zone and provide amenities contributing to pedestrian comfort, convenience, safety and interest, and support positive social interaction.
Policy PA 3.7.2	Street trees shall be planted in the Amenity Zone at a maximum of 30 feet apart. Street trees shall be selected from Milpitas Approved Street Trees list. No more than one species shall be planted per block in planters between the street and the sidewalk. Trees should be the same species on both sides of the street on each block. Specimens may be more varied adjacent to buildings.

City of Milpitas Zoning Code (Title XI, Chapter 10, Section 54.17 – Lighting)

Exterior lighting shall be shielded or recessed so that direct glare and reflections are contained within the boundaries of the parcel, and shall be directed downward and away from adjoining properties and public rights-of-way. Fixtures shall be appropriate in terms of height, style, design, scale and wattage to the use of the property. Fixtures shall be spaced appropriately to maximize pedestrian safety.

4.1.1.2 *Existing Conditions*

Project Site

The project site is located near the BART Station/Milpitas Transit Center (located approximately 900 feet to the north of the project site) and is heavily developed with a wide range of urban uses. The proposed bridge would extend from the southern termination point of South Milpitas Boulevard (which is flanked by high-density residential buildings of modern, conventional construction) past the top of bank of the Penitencia East Channel. The proposed roadway connection would extend from the southern end of the bridge through the office development located at 1831-1841 Tarob Court, Milpitas, CA 95035, which was built in 2001 and then would branch east and west to the termination points of Tarob and Sango Court, respectively. (Figure 3.3-3)

1831-1841 Tarob Court, Milpitas, CA 95035 is developed with a one-story rectangular-shaped office building and an associated surface parking lot. The currently vacant office building has a flat roof with terra cotta roof tiles accenting portions of the building’s roofline façade above large dark windows. A garage and shipping/ receiving area is located along the building’s southern face.

Surrounding Area

The project site is located in an area developed with a mix of industrial, commercial, and residential buildings. The site is bordered to the north by East Capitol Avenue and the Milpitas Transit Center; to the east by new residential mid-rise buildings, townhouses, and the BART right-of-way; to the south by office buildings, townhouses, and Augustus Rathbone Park; and the west by a new high-density multi-family apartment building (currently under construction), office buildings, and light industrial warehouses.

The project area is developed with a mix of land uses and architectural styles. As a result, no single design aesthetic is dominant. Industrial buildings in the project area consist of metal warehouses and stucco buildings. Commercial buildings in the project area consist of a mix of wood siding and stucco. The multi-family buildings in the project area are of contemporary design.

Scenic Views

The City of Milpitas is located between Mission Hills to the east and baylands to the west. Mission Hills and Monument Peak form a distinctive scenic backdrop to the City and are important to community identity and character. Views of the Diablo Range are considered a prominent landmark dominating the City's eastern skyline.

The foothills and the Coyote Creek corridor provide the City of Milpitas with a scenic backdrop and visual reference points. Per the City of Milpitas General Plan, scenic resources include hillsides, ridges, visually significant vegetation, and other elements that are critical in shaping the City's scenic identity. Additionally, major entryways to the City (e.g., southbound I-880 at Dixon Landing Road) are considered important to the City's identity.

Scenic Highways

There are no officially designated State Scenic Highways in the vicinity of the City of Milpitas. The nearest officially designated State Scenic Highway is I-680 from Mission Boulevard in Fremont to Bernal Avenue near Pleasanton, located approximately 5.3 miles north of the City.[2]

Light and Glare

Sources of light and glare are abundant in the urban environment of the City of Milpitas, including but not limited to streetlights, vehicular headlights, internal/external building lights, security lights, and reflective building surfaces and windows. Areas of open space and along creeks typically have lower levels of ambient nighttime lighting and daytime glare.

[2] California Department of Transportation. *California State Scenic Highway Systems Map.* Accessed January 9, 2024. https://caltrans.maps.arcgis.com/apps/webappviewer/index.html?id=465dfd3d807c46cc8e8057116f1aacaa.

4.1.2 Impact Discussion

	Potentially Significant Impact	Less than Significant with Mitigation Incorporated	Less than Significant Impact	No Impact
Except as provided in Public Resources Code Section 21099, would the project:				
1) Have a substantial adverse effect on a scenic vista?	☐	☐	☒	☐
2) Substantially damage scenic resources, including, but not limited to, trees, rock outcroppings, and historic buildings within a state scenic highway?	☐	☐	☐	☒
3) In non-urbanized areas, substantially degrade the existing visual character or quality of public views of the site and its surroundings? [3] If the project is in an urbanized area, would the project conflict with applicable zoning and other regulations governing scenic quality?	☐	☐	☒	☐
4) Create a new source of substantial light or glare which would adversely affect day or nighttime views in the area?	☐	☐	☒	☐

Impact AES-1: The project would not have a substantial adverse effect on a scenic vista. **(Less than Significant Impact)**

There are no officially designated scenic vistas in the City of Milpitas.[4] As described in Section 4.1.1.2 above, significant visual resources in the City include Mission Hills and Monument Peak. Additionally, views of the Diablo Range are considered a prominent landmark dominating the City's skyline. The project proposes to construct a bridge across Penitencia East Channel, demolish a one-story office building, construct an extension of S. Milpitas Boulevard and a new connector road, and construct new creek channel access for maintenance. The proposed bridge, including architectural enhancements would be up to approximately 15 feet in height from the finish grade. Due to the flat topography and surrounding development in the project area and the relatively small size of the proposed bridge, the proposed project would not substantially block or affect views of these visual resources. Therefore, implementation of the proposed project would not result in a substantial adverse effect on a scenic vista.

Impact AES-2: The project would not substantially damage scenic resources, including, but not limited to, trees, rock outcroppings, and historic buildings within a state scenic highway. **(No Impact)**

The nearest officially designated State Scenic Highway is I-680 from SR 238 in Fremont to Bernal Avenue near Pleasanton and is located approximately 5.3 miles north of the City. The proposed

[3] Public views are those that are experienced from publicly accessible vantage points.
[4] City of Milpitas. *Milpitas General Plan Final Environmental Impact Report*. January 2020. SCH 2020070348.

bridge and roadway connections would not be visible from I-680, and therefore would not damage any scenic resources within a state scenic highway. Therefore, no impact would occur.

Impact AES-3:	The project is in an urbanized area. The project would not conflict with applicable zoning and other regulations governing scenic quality. **(Less than Significant Impact)**

The project would include 7-foot-wide planting strips on both sides of the connecting roadways consistent with MMSP Policies SD 2.11 and PA 3.7.2. Consistent with the intention of General Plan Policy CD 3-4, the railing of the bridge is designed to mimic the shape of the mountain range overlooking the City of Milpitas and would be illuminated with rainbow lights pointing upward away from the channel at nighttime, thereby strengthening the identity of the area through the use of natural features and lighting. With the implementation of the MMSP policies and General Plan Policy CD 3-4, the project would comply with all applicable zoning and other regulations related to scenic resources. Accordingly, the project would not be in conflict with regulations governing scenic quality.

Impact AES-4:	The project would not create a new source of substantial light or glare which would adversely affect day or nighttime views in the area. **(Less than Significant Impact)**

Sources of light and glare are abundant in the urban environment of the immediate project area, and include streetlights, security lights, residential lights, and reflective building surfaces and windows. The proposed bridge would include illuminated vertical parallel steel plates ranging from three to 12 feet. Bridge materials would be composed of steel and concrete. These materials would not generate glare effects. During operation, the bridge would introduce new light sources to the project area from bridge lighting and passing vehicle lights, including to the Penitencia East Channel. All new lighting for the project would comply with the City of Milpitas Zoning Code (Title XI, Chapter 10, Section 54.17 - Lighting) described above in Section 4.1.1.1 Regulatory Framework. For these reasons, the project would not create a source of substantial light or glare that would adversely affect day or nighttime views in the area.

4.2 AGRICULTURE AND FORESTRY RESOURCES

4.2.1 Environmental Setting

4.2.1.1 *Regulatory Framework*

State

Farmland Mapping and Monitoring Program

The California Department of Conservation's Farmland Mapping and Monitoring Program (FMMP) assesses the location, quality, and quantity of agricultural land and conversion of these lands over time. Agricultural land is rated according to soil quality and irrigation status. The best quality land is identified as Prime Farmland. In CEQA analyses, the FMMP classifications and published county maps are used, in part, to identify whether agricultural resources that could be affected are present on-site or in the project area.[5]

California Land Conservation Act

The California Land Conservation Act (Williamson Act) enables local governments to enter into contracts with private landowners to restrict parcels of land to agricultural or related open space uses. In return, landowners receive lower property tax assessments. In CEQA analyses, identification of properties that are under a Williamson Act contract is used to also identify sites that may contain agricultural resources or are zoned for agricultural uses.[6]

Fire and Resource Assessment Program

The California Department of Forestry and Fire Protection (CAL FIRE) identifies forest land, timberland, and lands zoned for timberland production that can (or do) support forestry resources.[7] Programs such as CAL FIRE's Fire and Resource Assessment Program and are used to identify whether forest land, timberland, or timberland production areas that could be affected are located on or adjacent to a project site.[8]

[5] California Department of Conservation. "Farmland Mapping and Monitoring Program." Accessed January 9, 2024. http://www.conservation.ca.gov/dlrp/fmmp/Pages/Index.aspx.
[6] California Department of Conservation. "Williamson Act." http://www.conservation.ca.gov/dlrp/lca.
[7] Forest Land is land that can support 10 percent native tree cover and allows for management of forest resources (California Public Resources Code Section 12220(g)); Timberland is land not owned by the federal government or designated as experimental forest land that is available for, and capable of, growing trees to produce lumber and other products, including Christmas trees (California Public Resources Code Section 4526); and Timberland Production is land used for growing and harvesting timber and compatible uses (Government Code Section 51104(g)).
[8] California Department of Forestry and Fire Protection. "Fire and Resource Assessment Program." Accessed January 9, 2024. http://frap.fire.ca.gov/.

4.2.1.2 *Existing Conditions*

The Santa Clara County Important Farmland 2016 Map designates the project site as Urban and Built-Up Land.[9] Urban and Built-Up Land is defined as land occupied by structures with a building density of at least one unit per 1.5 acres, or approximately six structures to a 10-acre parcel. There is no agricultural or forest land located on or adjacent to the project site and the site is not subject to a Williamson Act contract.

4.2.2 **Impact Discussion**

	Potentially Significant Impact	Less than Significant with Mitigation Incorporated	Less than Significant Impact	No Impact
Would the project:				
1) Convert Prime Farmland, Unique Farmland, or Farmland of Statewide Importance (Farmland), as shown on the maps prepared pursuant to the Farmland Mapping and Monitoring Program of the California Resources Agency, to non-agricultural use?	☐	☐	☐	☒
2) Conflict with existing zoning for agricultural use, or a Williamson Act contract?	☐	☐	☐	☒
3) Conflict with existing zoning for, or cause rezoning of, forest land (as defined in Public Resources Code Section 12220(g)), timberland (as defined by Public Resources Code Section 4526), or timberland zoned Timberland Production (as defined by Government Code Section 51104(g))?	☐	☐	☐	☒
4) Result in a loss of forest land or conversion of forest land to non-forest use?	☐	☐	☐	☒
5) Involve other changes in the existing environment which, due to their location or nature, could result in conversion of Farmland to non-agricultural use or conversion of forest land to non-forest use?	☐	☐	☐	☒

[9] California Department of Conservation. *Santa Clara County Important Farmland 2016 Map*. Accessed January 9, 2024. https://santaclaralafco.org/sites/default/files/scl16.pdf.

Impact AG-1:	The project would not convert Prime Farmland, Unique Farmland, or Farmland of Statewide Importance, as shown on the maps prepared pursuant to the Farmland Mapping and Monitoring Program of the California Resources Agency, to non-agricultural use. **(No Impact)**

The project site is designated as Urban and Built-Up Land[10], as discussed in Section 4.2.1.2 Existing Conditions, and is not designated as farmland of any type. Therefore, the project would not convert farmland to a non-agricultural use.

Impact AG-2:	The project would not conflict with existing zoning for agricultural use, or a Williamson Act contract. **(No Impact)**

The project site is not designated as farmland or zoned for agricultural use and is not the subject of a Williamson Act contract. The surrounding area is urbanized and not zoned for agricultural use or considered farmland. For these reasons, the proposed project would not conflict with zoning for agricultural uses or a Williamson Act contract.[11]

Impact AG-3:	The project would not conflict with existing zoning for, or cause rezoning of, forest land, timberland, or timberland zoned Timberland Production. **(No Impact)**

The project site and surrounding area are not zoned forest land or timberland.[12] Therefore, the proposed project would not impact timberland or forest land.

Impact AG-4:	The project would not result in a loss of forest land or conversion of forest land to non-forest use. **(No Impact)**

As discussed under Impact AG-3, The project site and surrounding area is not used or zoned for timberland or forest land.[13] Since the site is urban and built-up land surrounded by urbanized areas it could not support forest land or timberland. Therefore, the proposed project would not result in the loss of forest land or conversion of forest land to non-forest use.

[10] California Department of Conservation. *California Important Farmland Finder*. Accessed January 9, 2024. DLRP Important Farmland Finder (ca.gov)
[11] County of Santa Clara. *Interactive Map of Williamson Act Properties*. Accessed January 9, 2024. https://sccplanning.maps.arcgis.com/apps/webappviewer/index.html?id=1f39e32b4c0644b0915354c3e59778ce
[12] *Forest land* is land that can support 10 percent native tree cover and allows for management of one or more forest resources, including timber, fish, wildlife, and biodiversity (California Public Resources Code Section 12220(g)); *Timberland* is land not owned by the federal government or designated as experimental forest land that is available for, and capable of, growing a crop of trees used to produce lumber and other forest products, including Christmas trees (California Public Resources Code Section 4526); and *Timberland Production* is land devoted to and used for growing and harvesting timber and other compatible uses (Government Code Section 51104(g)).
[13] California Department of Forestry and Fire Protection. "Fire and Resource Assessment Program." Accessed January 9, 2024. http://frap.fire.ca.gov/

Impact AG-5:	The project would not involve other changes in the existing environment which, due to their location or nature, could result in conversion of Farmland, to non-agricultural use or conversion of forest land to non-forest use. **(No Impact)**

As stated in Impact AG-1 and Impact AG-4, the project site and surrounding area are not designated farmland or used for agricultural or forestry purposes. As a result, the implementation of the proposed project would not result in the conversion of farmland to non-agricultural use or forest land to non-forest uses.

4.3 AIR QUALITY

The following discussion is based, in part, on an Air Quality and Greenhouse Gas Assessment and an Update to the Air Quality Impact Analysis Memo prepared for the project by Illingworth & Rodkin, Inc. The reports, dated November 10, 2021 and November 20, 2023, are attached to this Initial Study as Appendix A.

4.3.1 Environmental Setting

4.3.1.1 *Background Information*

Criteria Pollutants

Criteria air pollutants are pollutants that have established federal or State standards for outdoor concentrations to protect public health. Pursuant with the federal and State Clean Air Acts, the United States Environmental Protection Agency (EPA) and the California Air Resources Board (CARB) have established and enforced the National Ambient Air Quality Standards (NAAQS) and California Ambient Air Quality Standards (CAAQS), respectively. The NAAQS and CAAQS address the following criteria air pollutants: ozone (O_3), nitrogen dioxide (NO_2), carbon monoxide (CO), particulate matter with a diameter of 10 microns or less (PM_{10}), particulate matter with a diameter of 2.5 micros or less ($PM_{2.5}$), sulfur dioxide (SO_2), and lead. The CAAQS also includes visibility reducing particles, sulfates, hydrogen sulfide, and vinyl chloride.

Toxic Air Contaminants

Toxic Air Contaminants (TACs) are a broad class of compounds known to have health effects. They include but are not limited to criteria pollutants. TACs are found in ambient air, especially in urban areas, and are caused by industry, agriculture, diesel fuel combustion, and commercial operations (e.g., dry cleaners). TACs are typically found in low concentrations, even near their source (e.g., diesel particulate matter [DPM] near a freeway).

Diesel exhaust is the predominant TAC in urban air and is estimated to represent about three-quarters of the cancer risk from TACs. Diesel exhaust is a complex mixture of gases, vapors, and fine particles. Medium- and heavy-duty diesel trucks represent the bulk of DPM emissions from California highways. The majority of DPM is small enough to be inhaled into the lungs. Most inhaled particles are subsequently exhaled, but some deposit on the lung surface or are deposited in the deepest regions of the lungs (most susceptible to injury).[14] Chemicals in diesel exhaust, such as benzene and formaldehyde, have been previously identified as TACs by the California Air Resources Board (CARB).

Sensitive Receptors

Some groups of people are more affected by air pollution than others. CARB has identified the following persons who are most likely to be affected by air pollution: children under 16, the elderly over 65, athletes, and people with cardiovascular and chronic respiratory diseases. These groups are classified as sensitive receptors. Locations that may contain a high concentration of these sensitive

[14] California Air Resources Board. "Overview: Diesel Exhaust and Health." Accessed January 9, 2024. https://ww2.arb.ca.gov/resources/overview-diesel-exhaust-and-health.

population groups include residential areas, hospitals, daycare facilities, elder care facilities, and elementary schools.

4.3.1.2 *Regulatory Framework*

Federal and State

Clean Air Act

At the federal level, the United States Environmental Protection Agency (EPA) is responsible for overseeing implementation of the Clean Air Act and its subsequent amendments. The federal Clean Air Act requires the EPA to set national ambient air quality standards for the six common criteria pollutants (discussed previously), including PM, O_3, CO, SO_x, NO_x, and lead.

CARB is the state agency that regulates mobile sources throughout the state and oversees implementation of the state air quality laws and regulations, including the California Clean Air Act. The EPA and the CARB have adopted ambient air quality standards establishing permissible levels of these pollutants to protect public health and the climate. Violations of ambient air quality standards are based on air pollutant monitoring data and are determined for each air pollutant. Attainment status for a pollutant means that a given air district meets the standard set by the EPA and/or CARB.

Risk Reduction Plan

To address the issue of diesel emissions in the state, CARB developed the Risk Reduction Plan to Reduce Particulate Matter Emissions from Diesel-Fueled Engines and Vehicles. In addition to requiring more stringent emission standards for new on-road and off-road mobile sources and stationary diesel-fueled engines to reduce particulate matter emissions by 90 percent, the plan involves application of emission control strategies to existing diesel vehicles and equipment to reduce DPM (in additional to other pollutants). Implementation of this plan, in conjunction with stringent federal and CARB-adopted emission limits for diesel fueled vehicles and equipment (including off-road equipment), will significantly reduce emissions of DPM and NO_X.

Regional

2017 Clean Air Plan

The Bay Area Air Quality Management District (BAAQMD) is the agency primarily responsible for assuring that the federal and state ambient air quality standards are maintained in the San Francisco Bay Area. Regional air quality management districts, such as BAAQMD, must prepare air quality plans specifying how state and federal air quality standards will be met. BAAQMD's most recently adopted plan is the Bay Area 2017 Clean Air Plan (2017 CAP). The 2017 CAP focuses on two related BAAQMD goals: protecting public health and protecting the climate. To protect public health, the 2017 CAP describes how BAAQMD will continue its progress toward attaining state and federal air quality standards and eliminating health risk disparities from exposure to air pollution among Bay Area communities. To protect the climate, the 2017 CAP includes control measures designed to reduce emissions of methane and other super-greenhouse gases (GHGs) that are potent

climate pollutants in the near-term, and to decrease emissions of carbon dioxide by reducing fossil fuel combustion.[15]

CEQA Air Quality Guidelines

The BAAQMD CEQA Air Quality Guidelines are intended to serve as a guide for those who prepare or evaluate air quality impact analyses for projects and plans in the San Francisco Bay Area. Jurisdictions in the San Francisco Bay Area Air Basin utilize the thresholds and methodology for assessing air quality impacts developed by BAAQMD within their CEQA Air Quality Guidelines. The guidelines include information on legal requirements, BAAQMD rules, methods of analyzing impacts, and recommended mitigation measures.

Local

City of Milpitas General Plan 2040

The following policies and actions in the City's General Plan have been adopted for the purpose of avoiding or mitigating air quality impacts resulting from planned development within the City, including the following:

Policies/Actions	Description
Policy CIR 1-3	Promote interconnectivity of the transportation network in existing and new developments and actively measure the quality of conditions in neighborhoods to better understand what barriers exist in order to support use of and access to the network.
Policy CIR 1-4	Coordinate development of safe, inclusive, and health-promoting transportation infrastructure with local, county, regional, and state agencies to optimize efficiency of the transportation network for all users and increase opportunities for physical activity for all types of users.
Policy CIR 6-2	Support development of healthier communities through the use of lower- or non-polluting modes of transportation to reduce GHG vehicle emissions and local air pollution levels.
Action CIR-1j	Seek opportunities to eliminate close walking and bicycling network gaps across barriers to mobility, including I-680, I-880, SR 237, and the Union Pacific and BART tracks.
Action CIR-4q	Make improvements to roads, signs, and traffic signals as needed to improve accessible, safe, and convenient bicycle and pedestrian travel.
Policy CON 7-1	Ensure that land use and transportation plans support air quality goals through a logical development pattern that focuses growth in and around existing urbanized areas, locates new housing near places of employment, encourages alternative modes of transportation, supports efficient parking strategies, reduces vehicle miles traveled, and requires projects to mitigate significant air quality impacts.

[15] Bay Area Air Quality Management District. *2017 Clean Air Plan.* April 19, 2017.

Policies/Actions	Description
Policy CON 7-2	Minimize exposure of the public to toxic or harmful air emissions and odors through requiring an adequate buffer or setback distance between residential and other sensitive land uses and land uses that typically generate air pollutants, toxic air contaminants, or obnoxious fumes or odors, including but not limited to industrial, manufacturing, and processing facilities, high-volume roadways, and industrial rail lines. New sensitive receptors, such as residences (including residential care and assisted living facilities for the elderly), childcare centers, schools, playgrounds, churches, and medical facilities shall be located away from existing point sources of air pollution such that excessive levels of exposure do not result in unacceptable health risks. Compliance shall be verified through the preparation of a Health Risk Assessment when deemed necessary by the Planning Director.
Policy CON 7-4	Require projects to adhere to the requirements of the Bay Area Air Quality Management District (BAAQMD).
Policy CON 7-5	Use the City's development review process and the California Environmental Quality Act (CEQA) to evaluate and mitigate the local and cumulative effects of new development on air quality.
Policy CON 7-6	Coordinate with the California Air Resources Board (CARB) and the Bay Area Air Quality Management District to properly measure air quality emission sources and enforce the standards of the Clean Air Act.
Policy CON 7-7	Comply with regional, state, and federal standards and programs for control of all airborne pollutants and noxious odors, regardless of source.
Policy CON 7-8	Consider the health risks associated with Toxic Air Contaminants (TACs) when reviewing development applications.
Policy CON 7-11	Encourage improvements and design features that reduce vehicle delay such as bus turnouts, and synchronized traffic signals for new development to reduce excessive vehicle emissions caused by idling.
Policy CON 7-12	Encourage and prioritize infrastructure investments and improvements that promote safe walking, bicycling and increased transit ridership.
Action CON-7e	Require dust control measures, including those included in the Santa Clara Valley Non-point Source Pollution Control Program, and BAAQMD's Best Management Practices for fugitive dust control during construction.

Policies/Actions	Description
Action CON-7f	Use the BAAQMD "Air Quality Guidelines", as amended, or replaced, in identifying thresholds, evaluating the potential project and cumulative impacts, and determining appropriate mitigation measures. Review development, infrastructure, and planning projects for consistency with BAAQMD requirements during the CEQA review process. Require project applicants to prepare air quality analyses to address BAAQMD, and General Plan requirements, which includes analysis and identification of: • Air pollutant emissions associated with the project during construction, project operation, and cumulative conditions; • Potential exposure of sensitive receptors to toxic air contaminants; • Significant air quality impacts associated with the project for construction, project operation, and cumulative conditions; and • Mitigation measures to reduce significant impacts to less than significant or the maximum extent feasible where impacts cannot be mitigated to less than significant.
Action CON-7i	Require construction activity plans, and grading and drainage plans to include and/or provide for dust management to prevent fugitive dust from leaving the property boundaries and causing a public nuisance or a violation of an ambient air standard. Project applicants, or their assigned agents/contractors, shall be responsible for ensuring that all adequate dust control measures are implemented in a timely manner during all phases of project grading and construction.

4.3.1.3 *Existing Conditions*

The Bay Area is considered a non-attainment area for ground-level O_3 and $PM_{2.5}$ under both the federal Clean Air Act and state Clean Air Act. The area is also considered in non-attainment for PM_{10} under the state act, but not the federal act. The area has attained both state and federal ambient air quality standards for CO. As part of an effort to attain and maintain ambient air quality standards for O_3 and PM_{10}, BAAQMD has established thresholds of significance for these air pollutants and their precursors. These thresholds are for O_3 precursor pollutants (ROG and NOX), PM_{10}, and $PM_{2.5}$, and apply to both construction period and operational period impacts.

As shown in Figure 2.4-3, sensitive receptors (i.e. residences) are present to the west, east, north, and south of the project site. The nearest sensitive receptors are located immediately west and east of the project site on Sango Court (Sango Apartments) and Tarob Court (Parkside at Tarob Court), respectively.[16]

[16] Residences are also planned immediately south of the project site on Tarob Court.

4.3.2 Impact Discussion

	Potentially Significant Impact	Less than Significant with Mitigation Incorporated	Less than Significant Impact	No Impact
Would the project:				
1) Conflict with or obstruct implementation of the applicable air quality plan?	☐	☐	☒	☐
2) Result in a cumulatively considerable net increase of any criteria pollutant for which the project region is non-attainment under an applicable federal or state ambient air quality standard?	☐	☐	☒	☐
3) Expose sensitive receptors to substantial pollutant concentrations?	☐	☒	☐	☐
4) Result in other emissions (such as those leading to odors) adversely affecting a substantial number of people?	☐	☐	☒	☐

4.3.2.1 *Thresholds of Significance*

An Air Quality and GHG Assessment was prepared for the project in November 2021 (refer to Appendix A). At the time, the analysis relied on the thresholds published by BAAQMD in its 2017 CEQA Guidelines. BAAQMD published updates to their 2017 CEQA Guidelines in April 2023. These updates were mostly a matter of including methods for assessing impacts that are currently practiced by most air quality specialists. To document these updates, address changes to existing conditions (i.e., recently constructed apartments), and explain why the air quality analysis completed for the proposed project is valid and additional modeling is not necessary, Illingworth & Rodkin prepared a memo in November 2023 (refer to Appendix A).

As discussed in CEQA Guidelines Section 15064(b), the determination of whether a project may have a significant effect on the environment calls for judgment on the part of the lead agency and must be based to the extent possible on scientific and factual data. The City of Milpitas has considered the air quality thresholds updated by BAAQMD in April 2023 and regards these thresholds to be based on the best information available for the San Francisco Bay Area Air Basin and conservative in terms of the assessment of health effects associated with TACs and $PM_{2.5}$. The BAAQMD CEQA Air Quality thresholds used in this analysis are identified in Table 4.3-12 below, which are consistent with BAAQMD's current (2022) CEQA Guidelines.

Table 4.3-1: BAAQMD Air Quality Significance Thresholds[17]			
Pollutant	**Construction Thresholds**	**Operation Thresholds**	
	Average Daily Emissions (pounds/day)	**Annual Daily Emissions (pounds/year)**	**Annual Average Emissions (tons/year)**
Criteria Air Pollutants			
ROG, NO_x	54	54	10
PM_{10}	82 (exhaust)	82	15
$PM_{2.5}$	54 (exhaust)	54	10
CO	Not Applicable	9.0 ppm (eight-hour) or 20.0 ppm (one-hour)	
Fugitive Dust	Dust Control Measures/Best Management Practices	Not Applicable	
Health Risks and Hazards for New Sources (within a 1,000-foot Zone of Influence)			
Health Hazard	**Single Source**	**Combined Cumulative Sources**	
Excess Cancer Risk	10 per one million	100 per one million	
Hazard Index	1.0	10.0	
Incremental Annual $PM_{2.5}$	0.3 $\mu g/m^3$	0.8 $\mu g/m^3$ (average)	

Impact AIR-1: The project would not conflict with or obstruct implementation of the applicable air quality plan. **(Less than Significant Impact)**

Consistency with 2017 CAP

The 2017 CAP prepared for the Bay Area Air Basin defines an integrated, multi-pollutant control strategy to reduce emissions of particulate matter, TACs, ozone precursors, and GHGs. The proposed control strategy is designed to complement efforts to improve air quality and protect the climate that are being implemented by partner agencies at the state, regional, and local scale. The control strategy encompasses 85 individual control measures. The control measures describe specific actions to reduce emissions of air and climate pollutants from the full range of emission sources and is based on the following four key priorities (Chapter 5, page 5/35):

1. Reduce emissions of criteria air pollutants and TACs from all key sources.
2. Reduce emissions of "super-GHGs" such as methane, black carbon, and fluorinated gases.
3. Decrease demand for fossil fuels (gasoline, diesel, and natural gas).
    - Increase efficiency of energy, buildings, and transportation sectors

[17] Bay Area Air Quality Management District. 2022 *California Environmental Quality Act Air Quality Guidelines*. April 2023.

- Reduce demand for vehicle travel, and high-carbon goods and services.

4. Decarbonize our energy system.
    - Make the electricity supply carbon-free.
    - Electrify the transportation and building sectors.

As documented below, the proposed project does not exceed the BAAQMD thresholds for construction and operational criteria air pollutant emissions. The proposed project would reduce vehicle miles and vehicle hours traveled by providing a direct connection to surrounding uses and transportation facilities in the project area (refer to the discussion in Section 4.17 Transportation under Impact TRN-2), thereby, reducing criteria pollutant emissions (consistent with 2017 CAP priority #1) and demand for fossil fuels (consistent with 2017 CAP priority #3). For these reasons, the project would not preclude implementation of the 2017 CAP control measures and would not conflict with or obstruct implementation of the 2017 CAP. The project, therefore, would not result in a significant impact related to consistency with the 2017 CAP.

Construction Criteria Air Pollutants

In order to estimate emissions associated with construction of the bridge and roadway component of the project, the Air Quality Assessment (Appendix A) utilized the Sacramento Metropolitan Air Quality Management District's Road Construction Emission Model (RCEM) in accordance with BAAQMD guidance. The California Emissions Estimator Model (CalEEMod) Version 2020.4.0 was used to estimate emissions associated with demolition of the existing office building and associated surface parking lot.[18] Construction emissions were modeled based on equipment list and schedule information provided by the City. Details about the equipment list, construction schedule, modeling, data inputs, and assumptions are included in Appendix **A**. Table 4.3-23 below summarizes the annualized average daily construction emissions of ROG, NO_X, PM_{10} exhaust, and $PM_{2.5}$ exhaust during construction of the project.

Table 4.3-2: Project Construction Period Emissions

Year	ROG	NOx	PM_{10} Exhaust	$PM_{2.5}$ Exhaust
Construction Emissions Per Year (Tons)				
2023	0.11	1.15	0.05	0.04
2024	0.15	1.57	0.07	0.06
Annualized Daily Construction Emissions (pounds/day)				
2023[a]	1.69	17.36	0.75	0.66
2024[b]	1.17	11.87	0.54	0.47

[18] CalEEMod Version 2022.1 was released in May 2022 and recommended for use by BAAQMD in 2023. CalEEMod is routinely updated as newer, more accurate, information becomes available. In fact, there have been 34 updates to Version 2022.1 since its release. The primary difference between the prior and current versions of CalEEMod is that the current version uses EMFAC2021 model mobile emission factors and the prior version uses EMFAC2017 emission factors. The CalEEMod version used for the project air quality and GHG assessment was updated to use the EMFAC2021 emission factors and, therefore, is largely consistent with CalEEMod Version 2022.1 (refer to Appendix A).

BAAQMD Thresholds	*54 lbs./day*	*54 lbs./day*	*82 lbs./day*	*54 lbs./day*
Exceeds Threshold?	No	No	No	No

Source: Illingworth & Rodkin, Inc. *S. Milpitas Boulevard Vehicular Bridge Air Quality Assessment*. November 10, 2021.

Notes:

[a] Assumes 132 construction workdays

[b] Assumes 264 construction workdays

As shown in Table 4.3-23 above, the project's construction criteria pollutant emissions would not exceed BAAQMD thresholds. Additionally, implementation of MM AIR-3.1, described below under Impact AIR-3, would reduce $PM_{2.5}$ emissions associated with fugitive dust by 69 percent, and implementation of MM AIR-3.2 would reduce $PM_{2.5}$ emissions associated with construction vehicle exhaust by approximately 86 percent. Therefore, construction criteria air pollutant emissions would be less than significant.

Operation Criteria Air Pollutants

Operational air emissions from the project would be generated primarily by traffic using the new bridge and roadway connection. Emissions associated with vehicle travel depend on the year of analysis because emission control technology requirements are phased-in over time. This analysis assumed that the project would be fully built out and operating in the year 2027.[19]

Annual emissions were predicted using CARB's on-road vehicle emissions model, EMFAC2021. The emissions associated with the existing office development were subtracted from emissions associated with the project to calculate the net increase in emissions caused by the project. The modeling assumptions, data inputs, and results are described further in Appendix **A** of this Initial Study. Table 4.3-34 below shows the net average daily emissions of ROG, NO_X, total PM_{10}, and total $PM_{2.5}$ during project operation in comparison with the BAAQMD thresholds of significance identified in Table 4.3-12.

[19] The analysis of project emissions assumed an earlier build-out date than what the project now proposes (full build-out date of 2027). Since construction at a later date would produce less emissions due to improvements in vehicle efficiency, the emissions reported in Table 4.3-4 are conservative.

Table 4.3-3: Project Operational Period Emissions				
Scenario	**ROG**	**NOx**	**PM_{10}**	**$PM_{2.5}$**
Project (2024) Annual Emissions (tons/year)	0.002	0.004	0.03	0.004
Existing (2024) Annual Emissions (tons/year)	0.39	0.17	0.25	0.07
Net Annual Emissions (*tons/year*)	-0.39	-0.16	-0.22	-0.06
BAAQMD Thresholds (tons /year)	*10 tons*	*10 tons*	*15 tons*	*10 tons*
Exceeds Threshold?	No	No	No	No
Project (2024) Net Average Daily Emissions (pounds/day)[a]	0.01	0.02	0.14	0.02
BAAQMD Thresholds (pounds/day)	*54 lbs.*	*54 lbs.*	*82 lbs.*	*54 lbs.*
Exceeds Threshold?	No	No	No	No
Source: Illingworth & Rodkin, Inc. *S. Milpitas Boulevard Vehicular Bridge Air Quality Assessment*. November 10, 2021. Notes: [a] Assumes 365-day operation				

As shown in Table 4.3-34 above, the project's operational emissions would not exceed BAAQMD significance thresholds for ROG, NOx, PM_{10}, and $PM_{2.5}$ and, therefore, operational criteria air pollutant emissions would be less than significant.

Impact AIR-2:	The project would not result in a cumulatively considerable net increase of any criteria pollutant for which the project region is non-attainment under an applicable federal or state ambient air quality standard. **(Less than Significant Impact)**

As stated in the BAAQMD CEQA Air Quality Guidelines, air pollution by its nature is largely a cumulative impact. No single project is sufficient in size to, by itself, result in non-attainment of ambient air quality standards. If a project exceeds the identified significance thresholds, its emissions would be cumulatively considerable, resulting in significant adverse air quality impacts to the region's existing air quality conditions.

As described in Section 4.3.1.3 Existing Conditions, the Bay Area is considered a non-attainment area for ground-level O_3 and $PM_{2.5}$ under both the federal Clean Air Act and the California Clean Air Act. The area is also considered non-attainment for PM_{10} under the California Clean Air Act, but not the federal act. The area has attained both state and federal ambient air quality standards for carbon (CO) monoxide. As part of an effort to attain and maintain ambient air quality standards, BAAQMD

has established thresholds of significance for O_3 precursor pollutants (ROG and NOX), PM_{10}, and $PM_{2.5}$ and apply to both construction period and operational period impacts. As described above under Impact AIR-1, the project would not result in an exceedance of BAAQMD thresholds for these air pollutants during construction or operation. Therefore, the project would not result in a cumulatively considerable net increase of any criteria pollutant for which the project region is in non-attainment under any applicable federal or state ambient air quality standard.

Impact AIR-3:	The project would not expose sensitive receptors to substantial pollutant concentrations. **(Less than Significant Impact with Mitigation Incorporated)**

Fugitive Dust

Construction activities, particularly during demolition, site preparation, and grading, would temporarily generate fugitive dust in the form of PM_{10} and $PM_{2.5}$. Sources of fugitive dust would include disturbed soils at the construction site and trucks carrying uncovered loads of soils. Unless properly controlled, vehicles leaving the site would deposit mud on local streets, which could be an additional source of airborne dust after it dries. Substantial dust generation would be a significant impact.

Mitigation Measures: Implementation of the following mitigation measures would ensure that potential impacts from dust are less than significant.

MM AIR-3.1: The project shall implement the following Bay Area Air Quality Management District (BAAQMD) basic and additional construction mitigation measures during all applicable phases of construction:

- All exposed surfaces (e.g., parking areas, staging areas, soil piles, graded areas, and unpaved access roads) shall be watered at a frequency adequate to maintain minimum soil moisture of 12 percent (i.e., three times a day). Moisture content shall be verified by lab samples or moisture probe.
- All excavation, grading, and/or demolition activities shall be suspended when average wind speeds exceed 20 mph.
- The simultaneous occurrence of excavation, grading, and ground-disturbing construction activities on the same area at any one time shall be phased to reduce the amount of disturbed surfaces at any one time.
- Wind breaks (e.g., trees, fences) shall be installed on the windward side(s) of actively disturbed areas of construction. Wind breaks shall have at maximum 50 percent air porosity.
- Vegetative ground cover (e.g., fast-germinating native grass seed) shall be planted in disturbed areas as soon as possible and watered appropriately until vegetation is established.
- All roadways, driveways, and sidewalks to be paved shall be completed as soon as possible. Building pads shall be laid as soon as possible after grading unless seeding or soil binders are used.

- All vehicle speeds on unpaved roads shall be limited to 15 mph.
- All haul trucks transporting soil, sand, or other loose material off-site shall be covered.
- Site accesses to a distance of 100 feet from the paved road shall be treated with a six to 12-inch compacted layer of wood chips, mulch, or gravel.
- All trucks and equipment, including their tires, shall be washed off prior to leaving the site.
- All visible mud or dirt track-out onto adjacent public roads shall be removed using wet power vacuum street sweepers at least once per day. The use of dry power sweeping is prohibited.
- Sandbags or other erosion control measures shall be installed to prevent silt runoff to public roadways from sites with a slope greater than one percent.
- Idling times shall be minimized either by shutting equipment off when not in use or reducing the maximum idling time to two minutes (as required by the California airborne 14 toxics control measure Title 13, Section 2485 of California Code of Regulations [CCR]). Clear signage shall be provided for construction workers at all access points.
- All construction equipment shall be maintained and properly tuned in accordance with manufacturer's specifications. All equipment shall be checked by a certified mechanic and determined to be running in proper condition prior to operation.
- Post a publicly visible sign with the telephone number and person to contact at the Lead Agency regarding dust complaints. This person shall respond and take corrective action within 48 hours. BAAQMD's phone number shall also be visible to ensure compliance with applicable regulations.

With incorporation of MM AIR-3.1, which would implement both BAAQMD basic and additional construction measures, fugitive dust and other particulate matter during construction would have a less than significant air quality impact.

Community Health Risk

Project impacts related to increased community risk can occur either by introducing a new source of TACs with the potential to adversely affect existing sensitive receptors in the project vicinity or by significantly exacerbating existing cumulative TAC impacts. This project would introduce new sources of TACs during construction (i.e., on-site construction and truck hauling emissions) and operation (i.e., mobile and stationary sources). During operation, the project would generate approximately 800 daily trips consisting of mostly light-duty vehicles.[20]

[20] Hexagon Transportation Consultants, Inc. *Transportation Analysis for the Penitencia Creek Bridge Project Memorandum*. October 1, 2021.

Community Health Risk from Construction Activity

Construction equipment and associated heavy-duty truck traffic generates diesel exhaust, which is a known TAC. Although construction exhaust air pollutant emissions would not contribute substantially to existing or projected air quality violations (see Impact AIR-1), construction exhaust emissions may still pose health risks for sensitive receptors such as surrounding residents. The primary community risk impact issues associated with construction emissions are cancer risk and exposure to $PM_{2.5}$. DPM poses both a potential health and nuisance impact to nearby receptors. A quantitative health risk assessment of project construction activities was conducted to evaluate the potential health effects to nearby sensitive receptors from construction emissions of DPM and $PM_{2.5}$.

As noted under Impact AIR-1, construction period emissions were modeled using RCEM and CalEEMod. These models provided total annual PM_{10} exhaust emissions (assumed to be DPM) for the off-road construction equipment and EMFAC2021 was used to estimate exhaust emissions from on-road vehicles. Total DPM emissions from the construction site was estimated to be 0.11 tons (218 pounds). The on-road emissions are a result of haul truck travel during grading activities, worker travel, and vendor deliveries during construction. Due to the small size of the project site, a trip length of a half-mile was used to represent construction vehicle travel while at or near the construction site, which is where the construction emissions that nearby sensitive receptors would be exposed to would be generated. Fugitive $PM_{2.5}$ dust emissions were estimated to be 0.11 tons (227 pounds) using the same methods and assumptions used to estimate site DPM emissions.

The U.S. EPA AERMOD dispersion model was used to predict DPM and $PM_{2.5}$ concentrations at sensitive receptors (i.e. nearby residents) in the vicinity of the project construction area. Figure 4.3-1 shows the locations of sensitive receptors near the project site and the maximally exposed individual (MEI).[21] The highest $PM_{2.5}$ concentration would occur on the first floor (approximately five feet above ground) and the maximum cancer risk would occur on the second floor (approximately 15 feet above ground) at the adjacent multi-family residence located 16 feet east of the project site. Table 4.3-4 below shows the unmitigated maximum cancer risks, $PM_{2.5}$ concentrations, and hazard indexes (HIs) for project construction activities affecting the off-site residential MEI.

[21] After completion of the project air quality impact analysis, residences were constructed immediately west of the project site (i.e., Sango Apartments) and are also planned to the south. At the time the dispersion modeling was completed, these receptors were not known. However, these new existing and planned receptors would not be expected to experience more exposure than was identified at the MEI due to the prevailing wind direction in the project area. Source: Reyff, James. Illingworth & Rodkin, Inc. Personal Communication. December 19, 2023.

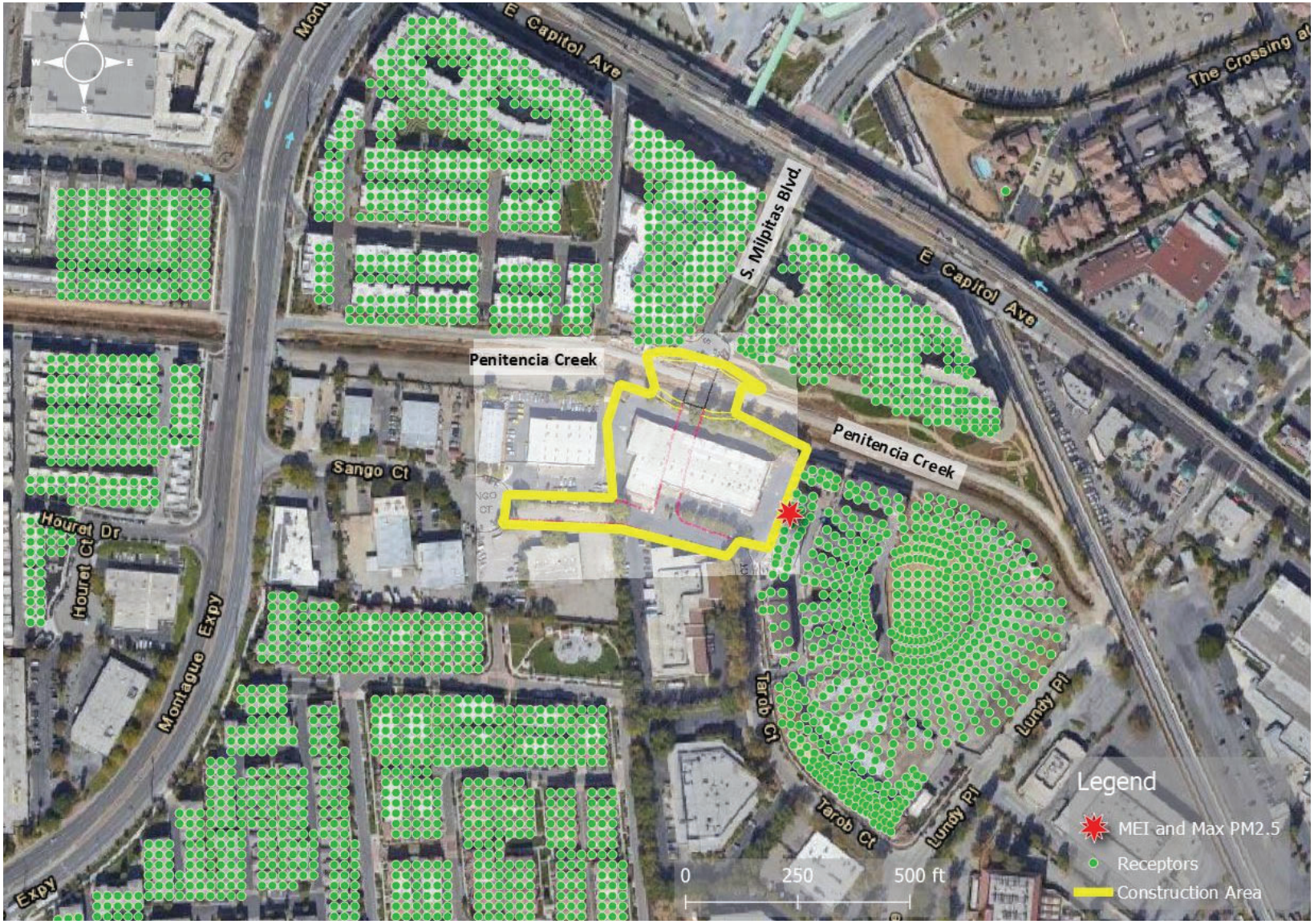

Source: Illingworth & Rodkin, Inc., November 10, 2021.

OFF-SITE RECEPTORS AND MAXIMALLY EXPOSED INDIVIDUAL | FIGURE 4.3-1

Table 4.3-4: Unmitigated Construction Risk Impacts at Off-Site MEI			
Source	**Cancer Risk (per million)**	**Annual $PM_{2.5}$ ($\mu g/m^3$)**	**Hazard Index**
Project Construction (18 months)	**82.77 (infant)**	**0.87**	0.06
BAAQMD Single-Source Threshold	*10.0*	*0.3*	*1.0*
Exceeds Single-Source Threshold?	***Yes***	***Yes***	*No*
Source: Illingworth & Rodkin, Inc. *S. Milpitas Boulevard Vehicular Bridge Air Quality Assessment*. November 10, 2021. Notes: Numbers in excess of BAAQMD single-source thresholds identified in **bold.**			

As shown in Table 4.3-4 above, the unmitigated maximum increased cancer risks and maximum annual $PM_{2.5}$ concentrations from construction exceed the BAAQMD single-source thresholds of greater than 10.0 per million for cancer risk and greater than 0.3 µg/m3 for $PM_{2.5}$ concentrations, which would have a significant impact on the MEI without mitigation.

Mitigation Measures: Implementation of the following mitigation measures would ensure that potential health risk impacts are reduced to less than significant.

MM AIR-3.2: The project shall develop a plan demonstrating that the off-road equipment used on-site to construct the project would achieve a fleet-wide average 86 percent reduction in diesel particulate matter (DPM) exhaust emissions or greater.

- All diesel-powered off-road equipment, larger than 25 horsepower, operating on the site for more than two days continuously shall, at a minimum, meet U.S. Environmental Protection Agency (EPA) particulate matter emissions standards for Tier 4 Final engines.
- Where Tier 4 equipment is not available, all construction equipment larger than 25 horsepower used at the site for more than two continuous days shall meet U.S. EPA emissions standards for Tier 3 engines and include California Air Resources Board-certified Level 3 Diesel Particulate Filters or equivalent that altogether achieves a 86 percent reduction in exhaust emissions. Equipment that is electrically powered or uses non-diesel fuels would also meet this requirement.

Implementation of MM AIR-3.1 (described above under Fugitive Dust) would reduce $PM_{2.5}$ emissions associated with fugitive dust by 69 percent, and implementation of MM AIR-3.2 would reduce $PM_{2.5}$ emissions associated with construction vehicle exhaust by approximately 86 percent.

Implementation of these mitigation measures would reduce the maximum increased cancer risk to 8.28 cases and the maximum annual $PM_{2.5}$ concentration to 0.24, which is below their respective BAAQMD thresholds. Accordingly, construction of the project would not expose nearby sensitive receptors to substantial pollutant concentrations with mitigation incorporated.

Community Health Risk from Project Operations

Operation of the project would generate emissions from mobile sources (i.e., traffic). Based on the project's trip generation estimates, the project would generate a maximum of 800 new daily trips. Emissions associated with project traffic were modeled using a combination of EMFAC2021 and CT-EMFAC2017. Since the project proposes to demolish the existing office building and associated parking lot, emissions associated with operation of the existing development were estimated using CalEEMod and subtracted from project emissions. The modeling assumptions, data inputs, and results are described further in Appendix **A** of this Initial Study. Table 4.3-5 below shows the maximum cancer risks, $PM_{2.5}$ concentrations, and hazard indexes (HIs) associated with project operation.

Table 4.3-5: Operational Risk Impacts at Off-Site MEI

Source	Cancer Risk (per million)	Annual $PM_{2.5}$ ($\mu g/m^3$)	Hazard Index
Project Traffic (Years 0-30)	0.05 (infant)	0.02	<0.1
BAAQMD Single Source Threshold	*10*	*0.3*	*1.0*
Exceeds Single-Source Threshold?	No	No	No

Source: Illingworth & Rodkin, Inc. *S. Milpitas Boulevard Vehicular Bridge Air Quality Assessment*. November 10, 2021.

As shown above, operation of the project would not result in maximum cancer risks, $PM_{2.5}$ concentrations, or HIs in excess of BAAQMD thresholds. Accordingly, operation of the project (on its own) would not expose nearby sensitive receptors to substantial pollutant concentrations.

Health Effects from Criteria Pollutants

In a 2018 decision (*Sierra Club v. County of Fresno*), the state Supreme Court determined that CEQA requires that when a project's criteria air pollutant emissions would exceed applicable thresholds and make a cumulatively considerable contribution to a significant cumulative regional criteria pollutant impact, the potential for the project's emissions to affect human health in the air basin must be disclosed. State and federal ambient air quality standards are health-based standards and exceedances of those standards result in continued unhealthy levels of air pollutants. In developing thresholds of significance for air pollutants, BAAQMD considered the emission levels for which a project's individual emissions would be cumulatively considerable. If a project has a less than significant impact for criteria pollutants, it is assumed to have no adverse health affect. As described previously under Impact AIR-1, the proposed project would not exceed BAAQMD thresholds for criteria air pollutants. Therefore, the project would not result in an adverse health effect due to emissions of criteria air pollutants.

Impact AIR-4:	The project would not result in other emissions (such as those leading to odors) adversely affecting a substantial number of people. **(Less than Significant Impact)**

BAAQMD has identified a variety of land uses that produce emissions that may lead to odors and generate complaints including, but are not limited to, wastewater treatment plants, landfills, composting operations, and food manufacturing facilities.

Roadways do not typically generate objectionable odors, nor do they fall under any of the land uses identified by BAAQMD to cause objectionable odors. Localized odors, mainly resulting from diesel exhaust and construction equipment on-site, would be created during the construction phase of the project. These odors would be temporary and not likely be noticed beyond the project site's boundaries. Project-related traffic would be primarily light-duty vehicle traffic, which typically does not use diesel fuel and would not be a substantial permanent source of diesel exhaust odors. Therefore, the project would not result in other emissions that could adversely affect a substantial number of people.

4.4 BIOLOGICAL RESOURCES

The following discussion is based in part on a Biological Resources Report prepared by H.T. Harvey and Associates. The report, dated December 2023, is included in this Initial Study as Appendix B.

4.4.1 Environmental Setting

4.4.1.1 *Regulatory Framework*

Federal and State

Endangered Species Act

Individual plant and animal species listed as rare, threatened, or endangered under state and federal Endangered Species Acts are considered special-status species. Federal and state endangered species legislation has provided the United States Fish and Wildlife Service (USFWS) and the California Department of Fish and Wildlife (CDFW) with a mechanism for conserving and protecting plant and animal species of limited distribution and/or low or declining populations. Permits may be required from both the USFWS and CDFW if activities associated with a proposed project would result in the take of a species listed as threatened or endangered. To "take" a listed species, as defined by the State of California, is "to hunt, pursue, catch, capture, or kill, or attempt to hunt, pursue, catch, capture, or kill" these species. Take is more broadly defined by the federal Endangered Species Act to include harm of a listed species.

In addition to species listed under state and federal Endangered Species Acts, Sections 15380(b) and (c) of the CEQA Guidelines provide that all potential rare or sensitive species, or habitats capable of supporting rare species, must be considered as part of the environmental review process. These may include plant species listed by the California Native Plant Society and CDFW-listed Species of Special Concern.

Migratory Bird Treaty Act

The federal Migratory Bird Treaty Act (MBTA) prohibits killing, capture, possession, or trade of migratory birds except in accordance with regulations prescribed by the Secretary of the Interior. Hunting and poaching are also prohibited. The taking and killing of birds resulting from an activity is not prohibited by the MBTA when the underlying purpose of that activity is not to take birds.[22] Nesting birds are considered special-status species and are protected by the USFWS. The CDFW also protects migratory and nesting birds under California Fish and Game Code Sections 3503, 3503.5, and 3800. The CDFW defines taking as causing abandonment and/or loss of reproductive efforts through disturbance.

Magnuson-Stevens Fishery Conservation and Management Act

The Magnuson-Stevens Fishery Conservation and Management Act governs all fishery management activities that occur in federal waters within the United States' 200-nautical-mile limit. The Act establishes eight Regional Fishery Management Councils responsible for the preparation of fishery

[22] United States Department of the Interior. *Memorandum M-37050. The Migratory Bird Treaty Act Does Not Prohibit Incidental Tak*e. January 9, 2024. https://www.doi.gov/sites/doi.gov/files/uploads/m-37050.pdf.

management plans to achieve the optimum yield from U.S. fisheries in their regions. These councils, with assistance from the National Marine Fisheries Service (NMFS), establish Essential Fish Habitat (EFH) in FMPs for all managed species. Federal agencies that fund, permit, or implement activities that may adversely affect EFH are required to consult with the NMFS regarding potential adverse effects of their actions on EFH, and respond in writing to recommendations by the NMFS.

Sensitive Habitat Regulations

Wetland and riparian habitats are considered sensitive habitats under CEQA. They are also afforded protection under applicable federal, state, and local regulations, and are generally subject to regulation by the United States Army Corps of Engineers (USACE), Regional Water Quality Control Board (RWQCB), CDFW, and/or the USFWS under provisions of the federal Clean Water Act (e.g., Sections 303, 304, 404) and State of California Porter-Cologne Water Quality Control Act.

Fish and Game Code Section 1602

Streambeds and banks, as well as associated riparian habitat, are regulated by the CDFW per Section 1602 of the Fish and Game Code. Work within the bed or banks of a stream or the adjacent riparian habitat requires a Streambed Alteration Agreement from the CDFW.

Local

City of Milpitas General Plan 2040

The following policies in the City's General Plan have been adopted for the purpose of reducing or avoiding impacts related to biological resources and are applicable to the project.

Policies	Description
Policy CON 2-1	Conserve existing native trees and vegetation where possible and integrate regionally native trees and plant species into development and infrastructure projects where appropriate.
Policy CON 2-3	Avoid removal of large, mature trees that provide wildlife habitat, visual screening, or contribute to the visual quality of the environment through appropriate project design and building siting. If full avoidance is not possible, prioritize planting of replacement trees on-site over off-site locations. Replacement trees for high-quality mature trees should generally be of like kind, and provide for comparable habitat functionality, where appropriate site conditions exist.
Policy CON 3-1	Preserve and enhance biological communities that contribute to Milpitas' and the region's biodiversity including, but not limited to, wetlands, riparian areas, and aquatic habitat.
Policy CON 3-2	Preserve and enhance the aesthetic and habitat value of riparian corridors including, but not limited to Coyote, Berryessa and Penitencia Creeks.
Policy CON 3-3	Limit the disturbance of natural water bodies and drainage systems in Milpitas by conserving natural open space areas, protecting channels, and minimizing the impacts and pollutants from stormwater and urban runoff.

Policies	Description
Policy CON 3-5	Work with the Santa Clara Valley Water District to preserve wetlands, riparian corridors, and buffer zones in Milpitas by continuing to require that new development follow the "Guidelines and Standards for Land Use Near Streams" to protect streams and riparian habitats. Encourage the use of Green Stormwater Infrastructure such as water quality wetlands, bioretention swales, watershed-scale retrofits, and other low-impact development techniques, etc., consistent with the City's Green Stormwater Infrastructure Plan and where such measures are likely to be effective and technically and economically feasible.

City of Milpitas Metro Specific Plan

The MMSP adopted the following policies for the purpose of avoiding or mitigating biological resources impacts resulting from planned development within the MMSP area, including the following:

Policies	Description
SC 9.1	To the extent feasible, future developers in the Metro Plan Area will conduct initial construction activities outside the nesting season between September 16 and January 14 including, but not limited to, tree trimming or tree removal, ground disturbance, demolition, site grading, and other activities that may compromise breeding birds or the success of their nests occurring within or outside the development site. If construction must occur during the migratory bird nesting season between February 1 to August 31 for small bird species, January 15 to September 15 for owls, and February 15 to September 15 for other raptors, a qualified wildlife biologist will conduct two preconstruction nesting surveys within 14 days and 48 hours prior to the start of construction or demolition. Additional surveys will be conducted 48 hours prior to the start of construction or demolition in areas that have not been previously disturbed by construction activities or after any construction breaks of 10 days or more. Typical experience requirements for a "qualified biologist" include a minimum of 4 years of academic training and professional experience in biological sciences and related resource management activities, and a minimum of 2 years of experience in biological monitoring or surveying for nesting birds. Surveys of suitable habitat will be performed in publicly accessible areas within 250 feet, 500 feet, and 1,000 feet of the construction site to locate any active passerine, small raptor (e.g., accipiters), and large raptor (e.g., buteos) nests, respectively. Surveys will be conducted at the appropriate times of day and during appropriate nesting times.
SC 9.2	If active nests are located during the preconstruction nesting bird surveys, a qualified biologist will evaluate the construction schedule and location to determine if construction activities could affect an active nest. If so, the following measures will apply, as determined by the qualified biologist: • If construction would not affect an active nest, construction may proceed without restriction; however, a qualified biologist will regularly monitor the nest at a frequency determined appropriate for the surrounding construction activity, to confirm that there would be no adverse effect. The frequency of spot check monitoring would be determined on a case by-case basis, considering the scope

Policies	Description
	of the particular construction activity, duration, proximity to the nest, and any physical barriers that may screen the nest. The qualified biologist may revise the determination at any time during the nesting season. • If it is determined that construction could affect an active nest, the qualified biologist will establish a no disturbance buffer around the nest. All construction will halt within the buffer until the qualified biologist determines that the nest is no longer active. Buffer distances will be equal to the survey distances (i.e., 50 feet for passerines and 250 feet for raptors); however, the buffer may be adjusted if an obstruction, such as a building, is within the line of sight between the nest and construction. • Modifying nest buffer distances, allowing certain construction activities within the buffer, and/or modifying construction methods in proximity to active nests will be done at the discretion of the qualified biologist. • Any construction that must occur within established no disturbance buffers will be monitored by a qualified biologist. If adverse effects in response to construction within the buffer are observed that could compromise the nest, construction within the no disturbance buffer will halt until the nest occupants have fledged. • Any birds that begin nesting within the construction area and survey buffers amid construction activities are assumed to be habituated to construction related or similar noise and disturbance levels. Therefore, exclusion zones around nests may be reduced or eliminated in these cases, as determined by the qualified biologist. Construction may proceed around active nests as long as the nests and their occupants would not be directly affected. If inactive nests are observed within or adjacent to the construction site, removal or relocation of the inactive nests will be at the discretion of the qualified biologist. Construction may proceed around inactive nests.

Tree Maintenance and Protection Ordinance

The Tree Maintenance and Protection Ordinance of the City of Milpitas (Milpitas Municipal Code, Chapter 2) serve to preserve all trees and plantings on City property, when feasible, and all protected plantings of significant size, age, and/or benefit to the community at large. Protected trees include:

- All trees which have a 56-inch or greater circumference of any trunk measured 4.5 feet from the ground and located on developed residential property; or
- All trees which have a 37-inch or greater circumference of any trunk measured 4.5 feet from the ground and located on developed commercial or industrial property; or
- All trees which have a 37-inch or greater circumference of any trunk measured 4.5 feet from the ground, when removal relates to any transaction for which zoning approval or subdivision approval is required; or
- Any tree existing at the time of a zoning or subdivision approval and was a specific subject of such approval or otherwise covered by subsection (b) above; or
- All trees which have a 37-inch or greater circumference of any trunk measured 4.5 feet from the ground and located on a vacant, undeveloped or underdeveloped property; or
- All heritage trees or groves of trees as defined in Section X 2-2.10.

A tree removal permit is required from the City of Milpitas for the removal of any street tree, protected tree, or heritage planting.

4.4.1.2 *Existing Conditions*

The project site is currently developed with office uses and open space along Penitencia East Channel in an urbanized area of Milpitas. A reconnaissance survey was completed to 1) assess the existing biotic habitat and plant and animal communities in the project vicinity, 2) assess the site for its potential to support special-status species and their habitats, and 3) identify potential jurisdictional habitats. For the purposes of this Initial Study, the "study area" includes the portion of the project site that spans Penitencia East Channel as shown on
The developed/landscaped habitat within the project footprint is of relatively low value to wildlife due to the general lack of vegetation and the predominance of non-native species where vegetation is present. In general, the habitats identified in the study area provide habitat for certain common, urban-adapted wildlife species typically associated with urban development.

<u>Riparian Annual Grassland</u>

This habitat type occurs between the top of bank along the edge of the Valley Water access roads and the ordinary high-water mark (OHWM). The channel banks consist entirely of ruderal grass and herb species.

Common, urban-adapted bird species found elsewhere in the study area likely also occur in the ruderal grassland levee slope, although this habitat has limited value for wildlife due to the absence of trees and shrubs and its isolation from large, contiguous tracts of other grassland. No evidence of burrowing mammals, such as California ground squirrels (*Otospermophilus beecheyi*) or valley pocket gophers (*Thomomys bottae*), was observed.

Figure 4.4-1. The study area is bounded by dense residential development to the north, east and west, and office development to the south.

Biotic Habitat

Reconnaissance-level surveys identified three habitat types or land uses in the study area: developed/landscaped; riparian annual grassland, and intermittent stream/freshwater marsh. This habitat is described in detail below, and the distribution of these habitats is shown in Figure 4.4-2.

Developed/Landscaped

The majority of the project site consists of developed and landscaped habitat in the form of gravel and asphalt access roads, ornamental trees, and landscaping. Landscaping in the study area includes mostly mature ornamental trees along the fence line south of Penitencia East Channel and recently installed landscaping associated with the adjacent multi-family housing. Fences border the north and south boundary of the study area and include a retaining wall along the north boundary.

The developed/landscaped habitat within the project footprint is of relatively low value to wildlife due to the general lack of vegetation and the predominance of non-native species where vegetation is present. In general, the habitats identified in the study area provide habitat for certain common, urban-adapted wildlife species typically associated with urban development.

Riparian Annual Grassland

This habitat type occurs between the top of bank along the edge of the Valley Water access roads and the ordinary high-water mark (OHWM). The channel banks consist entirely of ruderal grass and herb species.

Common, urban-adapted bird species found elsewhere in the study area likely also occur in the ruderal grassland levee slope, although this habitat has limited value for wildlife due to the absence of trees and shrubs and its isolation from large, contiguous tracts of other grassland. No evidence of burrowing mammals, such as California ground squirrels (*Otospermophilus beecheyi*) or valley pocket gophers (*Thomomys bottae*), was observed.

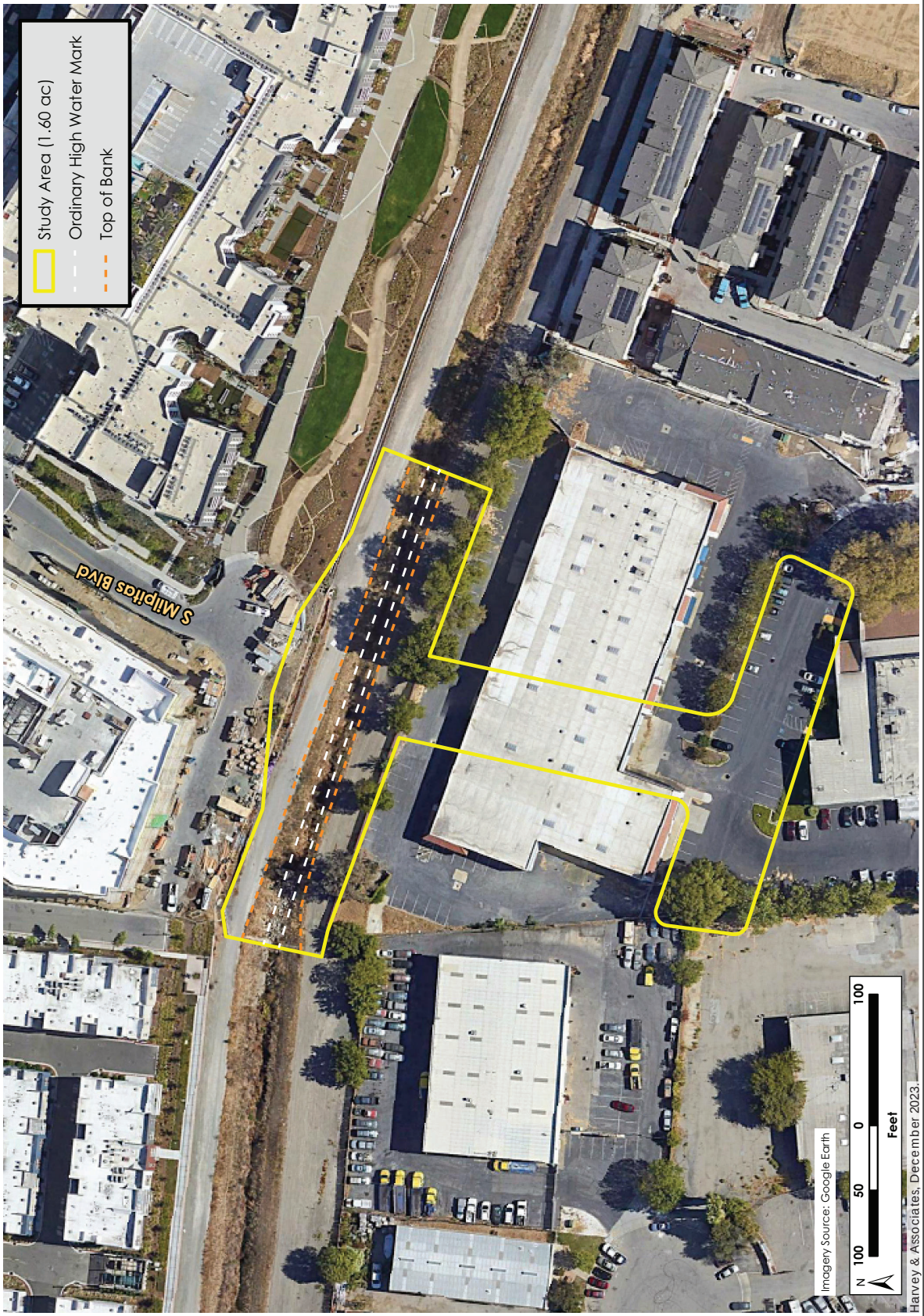

Source: H.T. Harvey & Associates, December 2023.

FIGURE 4.4-1

STUDY AREA

Source: H.T. Harvey & Associates, December 2023.

STUDY AREA HABITATS AND IMPACTS

FIGURE 4.4-2

Intermittent Stream/Freshwater Marsh

This habitat type occurs between the OHWM and the channel bottom. This reach of the channel supports a seasonally high groundwater table and seasonal flows during the wet season. An outlet immediately downstream of the study area conveys stormwater runoff, but the channel bottom in the study area was dry during both site visits. The portion between the OHWM and the toe of the slope is a vertical face throughout the study area and supports loamy eroded soils and ruderal transitional species, such as Italian ryegrass (*Festuca perennis*) and smilo grass. The substrate on the channel bottom consists of loose coarse sand that has likely accumulated during storm events in some areas, while in other areas it consists of bare loamy soil with surface cracks and only light leaf litter scattered about. The vegetation rooted deeper than the accumulated sand substrate in the channel bottom consists almost entirely of hydrophytic species, comprising freshwater marsh habitat.[23] The channel bottom from the toe of slope to the toe of slope meets the requirements of a three-parameter wetland.[24]

The stream habitat in the project area is intermittent and dry, but turns perennial downstream to the west, outside the project boundary. Downstream of the project site provides foraging habitat for some wetland and aquatic bird species, such as mallards (*Anas platyrhynchos*), great egrets (*Ardea alba*), snowy egrets (*Egretta thula*), and black phoebes (*Sayornis nigricans*), as well as some migrants such as Wilson's snipe (*Gallinago delicata*). The perennial stream habitat may also serve as habitat for amphibians such as Pacific tree frogs (*Pseudacris regilla*) and a variety of common fish species. However, the intermittent reach of stream on the project site is much drier. Although the aforementioned species could potentially forage in the on-site reach when it conveys water, they are expected to occur only temporarily, when flow is present, and likely in low numbers.

Special-Status Species

Special-Status Plant Species

While a total of 54 special-status plant species have the potential to occur in the study area, all of these species were determined to be absent from the study area for at least one of the following reasons: (1) lack of suitable habitat types; (2) absence of specific microhabitat or edaphic requirements, such as serpentine soils; (3) the elevation range of the species is outside of the range within the study area; and/or (4) the species is considered eradicated from the site vicinity.[25,26]

Special-Status Animal Species

While not specifically identified during the site visits, three special-status species, the western pond turtle (*Actinemys marmorata*), San Francisco common yellowthroat (*Geothlypis trichas sinuosa*), and yellow warbler (*Setophaga petechia*), could occur in the project footprint as nonbreeders.

[23] Hydrophytic species are those that have adapted to grow in water.
[24] The "toe" of a slope is essentially the bottom, or baseline section, of the soil mass comprising the slope. "Three parameter" refers to the three parameters (hydrology, soil, and vegetation) that must be present in order to meet the definition of a wetland.
[25] A microhabitat is a small area which differs somehow from the surrounding habitat. Its unique conditions may be home to unique species that may not be found in the larger region. Edaphic factors affect the ability of soil to sustain biological production and diversity, regulate and partition water, filter and buffer contaminants, store and cycle nutrients, and provide plant support.
[26] H.T. Harvey & Associates. *Biological Resources Report.* December 2023. Page 24.

Sensitive Natural Communities and Habitats

Sensitive Habitats (Waters of the U.S./State)

Penitencia East Channel is considered waters of the U.S./state up to the OHWM. Jurisdictional riparian buffers for waters of the state in the study area extend up to the top of bank of the channel.

Riparian Habitat

It is reasonable to assume that CDFW would claim jurisdiction over areas at and below the top of bank on either side of Penitencia East Channel regardless of the vegetative composition of these areas. No riparian habitat (e.g., riparian trees) is present above the top of bank in the study area.

4.4.2 Impact Discussion

	Potentially Significant Impact	Less than Significant with Mitigation Incorporated	Less than Significant Impact	No Impact
Would the project:				
1) Have a substantial adverse effect, either directly or through habitat modifications, on any species identified as a candidate, sensitive, or special status species in local or regional plans, policies, or regulations, or by the California Department of Fish and Wildlife (CDFW) or United States Fish and Wildlife Service (USFWS)?	☐	☒	☐	☐
2) Have a substantial adverse effect on any riparian habitat or other sensitive natural community identified in local or regional plans, policies, regulations, or by the CDFW or USFWS?	☐	☒	☐	☐
3) Have a substantial adverse effect on state or federally protected wetlands (including, but not limited to, marsh, vernal pool, coastal, etc.) through direct removal, filling, hydrological interruption, or other means?	☐	☒	☐	☐
4) Interfere substantially with the movement of any native resident or migratory fish or wildlife species or with established native resident or migratory wildlife corridors, or impede the use of native wildlife nursery sites?	☐	☐	☒	☐
5) Conflict with any local policies or ordinances protecting biological resources, such as a tree preservation policy or ordinance?	☐	☐	☒	☐

	Potentially Significant Impact	Less than Significant with Mitigation Incorporated	Less than Significant Impact	No Impact
Would the project:				
6) Conflict with the provisions of an adopted Habitat Conservation Plan, Natural Community Conservation Plan, or other approved local, regional, or state habitat conservation plan?	☐	☐	☐	☒

Impact BIO-1:	The project would not have a substantial adverse effect, either directly or through habitat modifications, on any species identified as a candidate, sensitive, or special status species in local or regional plans, policies, or regulations, or by the CDFW or USFWS. **(Less than Significant Impact with Mitigation Incorporated)**

The project site is currently developed with an office building and open space along Penitencia East Channel in an urbanized area of Milpitas. As described above in Section 4.4.1.2 Existing Conditions, the project site currently supports a number of common wildlife species, although due to its largely developed nature, the site provides relatively low-quality habitat for most species and thus supports relatively small numbers of individuals of any one species. The common wildlife species that occur on the site are regionally abundant, are present in widely available habitats in the region, and will continue to be present on the site following construction.

Special-Status Plant Species

As described above in Section 4.4.1.2 Existing Conditions, no special-status plant species are located on or adjacent to the study area. As a result, the proposed project will have no impact on special-status plant species.

Special-Status Animal Species

Three special-status species, the western pond turtle, San Francisco common yellowthroat, and yellow warbler, could occur in the project footprint as nonbreeders.

Western Pond Turtle

The western pond turtle is a California species of special concern and is protected under the California Fish and Game Code. Western pond turtles are not expected to breed or occur frequently on or near the project site due to lack of suitable habitat. As such, there is a very low probability for western pond turtles to occur on-site. Nevertheless, if water is present in the channel when work needs to occur, there is at least a low potential for northwestern pond turtles or native fish (e.g., if high winter flows allowed fish to move upstream) to be present in the work area. Dewatering could result in the loss of native fish to desiccation or turtles due to movement of vehicles and equipment. In addition, the project could result in indirect impacts on water quality in reaches of Penitencia East Channel further downstream, where western pond turtles are more likely to occur.

Mitigation Measures: Implementation of the following mitigation measures would ensure that potential impacts to special status species are less than significant.

MM BIO-1.1: **Worker Environmental Awareness Program.** All construction personnel working on the bridge will participate in a worker environmental awareness program. These personnel will be informed about the potential presence of native fish and northwestern pond turtles within and downstream from the project site. Prior to construction activities, a qualified biologist will instruct all construction personnel about (1) the description and status of these species; (2) the importance of their associated habitats; (3) a list of measures being taken to reduce impacts on these species during project construction; and (4) procedures to be followed if a northwestern pond turtle is observed by construction personnel in or near the project area during construction. If construction personnel observe any turtle in an area where it is at risk of injury or mortality due to the project, or where construction activity could prevent the turtle from returning to perennial habitat downstream from the project site, they will contact a qualified biologist immediately. All project activities that could impact the turtle will stop until the biologist has arrived at the site and determined whether the turtle is a northwestern pond turtle and (with any necessary USFWS approval) relocated the turtle to an appropriate location downstream.

MM BIO-1.2: **Preconstruction Survey and Fish Exclusion Prior to Dewatering Activities.** Prior to conducting dewatering activities, a qualified biologist will conduct a survey of the project area to look for fish and northwestern pond turtles. If any northwestern pond turtles are detected in areas where they are at risk of injury or mortality due to the project, or where construction activity could prevent the turtles from returning to perennial habitat downstream from the project site, the biologist will relocate the turtles to suitable habitat in the perennial reach of Penitencia East Channel downstream. If northwestern pond turtle has been listed by the USFWS under FESA by the time construction occurs, the biologist will handle/relocate individual turtles only with USFWS approval.

During the preconstruction survey, the biologist will determine whether there is any potential for native fish to be present in the project area based on presence/absence and depth of water. If any fish are or have the potential to be present in the on-site segment of creek channel, and if continuous flow is present from the project site downstream to the perennial reach of creek, the biologist will use block nets to exclude fish from the reach to be dewatered. A block net will be placed at the upper end of the reach to be dewatered. Subsequently, qualified biologists will walk from the upper to lower end of the reach with a seine stretched across the channel to encourage fish to move out of the construction area. When the lower end of the construction area is reached, a second block net will be installed to isolate the construction reach. This procedure will be repeated as needed until no fish remain in the construction area. If surface water is not continuous between the project site

and the perennial reach downstream, so that fish excluded from the site are unable to reach suitable habitat downstream, then the qualified biologist will capture native fish using appropriate methods and immediately release them in the perennial reach of the channel downstream.

MM BIO-1.3: **Maintenance of Flow through the Site.** In the unlikely event that fish are present within the channel when construction occurs, continuous flow will be maintained through the project site (e.g., in a temporary pipe) so that any fish upstream from the site are able to disperse downstream.

Implementation of mitigation measures MM BIO-1.1, BIO-1.2, and BIO-1.3 would reduce impacts on native fish and northwestern pond turtles to less than significant levels by ensuring that individual native fish and northwestern pond turtles are not trapped or otherwise impacted by the project.

San Francisco Common Yellowthroat and Yellow Warbler

The San Francisco common yellowthroat and yellow warbler are a California species of special concern and are protected under the California Fish and Game Code. The San Francisco common yellowthroat and yellow warbler could occur on the project site as nonbreeding migrants, transients, or foragers, but they are not known or expected to breed or occur in large numbers on or near the project site. At most, a few individuals of each of these species could occasionally forage on the project site. Proposed project activities would not result in the injury or mortality of individuals of any of these species, as they are mobile enough to avoid construction equipment. Because these species do not breed on the site, project activities would not affect breeding habitat or vulnerable young of these species. Therefore, the project would not result in the injury or mortality of individuals of these species. The project may result in the disturbance of a few foraging individuals and loss of a relatively limited amount of foraging habitat. However, this impact would be less than significant.

Wildlife Impacts from Increased Lighting

Many animals are sensitive to light cues, which influence their physiology and shape their behaviors, particularly during the breeding season. The project would construct lighting on a bridge that would increase the amount of light within and around the project site. The proposed bridge would include illuminated vertical parallel steel plates ranging from three to 12 feet. Based on the project's lighting plans, this lighting could spill into the adjacent Penitencia East Channel, resulting in an increase in lighting compared to existing conditions. Other new light sources to the project area would result from passing vehicle lights, including to Penitencia East Channel. If the lighting is excessive, or pointed upwards, nocturnal migrant birds may also be adversely affected. As a result, the species that utilize the aquatic and wetland habitats within the Penitencia East Channel could be significantly impacted by disrupting their natural behaviors. Although there is expert agreement that increases in illuminance can affect wildlife behavior, there is no agreed upon quantitative level of illuminance increase threshold for significant impacts to animals.

Mitigation Measure: Implementation of the following mitigation measures would ensure that potential impacts to wildlife from increase lighting are less than significant.

MM BIO-1.4: **Minimization and Shielding of Lighting.** All lighting for vehicular and pedestrian safety shall be minimized to the extent feasible (i.e., shall be no brighter than necessary for safety purposes), shall be oriented toward the bridge rather than outwards toward the Penitencia East Channel, and shall be fully shielded to block illumination from shining upward or outward toward the creek channel.

MM BIO-1.5: **Review of the Lighting Plan.** The lighting plan shall be reviewed by a qualified biologist prior to construction to ensure that the level of lighting would not result in adverse effects on wildlife in adjacent areas or attracting/disorienting nocturnal migrant birds.

Implementation of MM BIO-1.4 and MM BIO-1.5 would ensure shielding and minimize spillover of lighting into the Penitencia East Channel, thereby reducing impacts to wildlife from lighting to less than significant.

Nesting Birds

Nesting habitat for non-listed special-status raptor species and common nesting bird species occur on and near the project site. Many bird species utilize large ornamental trees for cover, nesting, or stop over locations during migration, especially with the availability of water from the nearby drainages. All native bird species that nest within the project area are protected under the Migratory Bird Treaty Act and California Fish and Game Code. Construction disturbance could cause nest abandonment resulting in an indirect loss to avian species.

Mitigation Measures: Implementation of the following mitigation measures would ensure that potential impacts to nesting birds are less than significant.

MM BIO-1.6: In conformance with Metro Specific Plan Policy SC 9.1 and SC 9.2 the following project-specific measures would be implemented to avoid impacts to nesting birds during construction and ensure compliance with the Migratory Bird Treaty Act (MBTA) and California Fish and Game Code:

- If feasible, construction activities shall be avoided during the nesting season (i.e., February 1 through August 31).
- Potential nesting substrate (e.g., bushes, trees, snags, grass, and suitable artificial surfaces) that would be impacted by development shall be removed during the non-breeding season (i.e., September 1 through January 31), to preclude nesting in the study area.
- If it is not feasible to schedule construction activities during the non-breeding season, preconstruction surveys for nesting birds shall be conducted by a qualified ornithologist to ensure that no nests will be disturbed during construction activities. This survey shall be conducted no more than seven days prior to the initiation of

construction activities. During this survey, the ornithologist shall inspect all trees, shrubs, and other potential nesting habitats in and immediately adjacent to the study area for nests. If an active nest is found sufficiently close to work areas to be disturbed by these activities, the ornithologist shall determine the extent of a buffer zone to be established around the nest, typically 300 feet for raptors and 100 feet for other birds, to ensure that no nests of species protected by the MBTA or the California Fish and Game Code will be disturbed during construction activities.

With implementation of MM BIO-1.6 above and consistent with MMSP Policy SC 9.1 and SC 9.2, the project would have a less than significant impact on nesting birds.

Impact BIO-2:	The project would not have a substantial adverse effect on any riparian habitat or other sensitive natural community identified in local or regional plans, policies, regulations or by the CDFW or USFWS. **(Less than Significant Impact with Mitigation Incorporated)**

As discussed above in Section 4.4.1.2 Existing Conditions, Penitencia East Channel is considered waters of the U.S./state up to the OHWM. Jurisdictional riparian buffers for waters of the state in the study area extend up to the top of bank of the channel. CDFW would likely claim jurisdiction over areas at and below the top of bank on either side of Penitencia East Channel regardless of the vegetative composition of these areas. No riparian habitat (e.g., riparian trees) is present above the top of bank in the study area.

The majority of ground-disturbing activity (i.e., project construction) would occur outside the top of banks of the Penitencia East Channel. Because the abutments would be placed above the top of bank, no permanent loss of riparian jurisdiction would occur. No riprap or other improvements are proposed to the banks that would prevent future vegetation growth. There would, however, be permanent and temporary impacts to the riparian banks as a result of shading from the proposed bridge and a temporary work area around the bridge abutments. The bridge would permanently shade 0.02 acres of riparian annual grassland.[27] Permanently shaded vegetation would weaken, decrease in cover, or even die off leaving bare soil exposed. Nevertheless, non-native dominated annual grassland is typically able to persist with some shading. The bridge would be eight feet above the banks, allowing for some light under the deck enabling enough herbaceous growth to stabilize soils and provide similar habitat quality to the existing condition.

The temporary work area within the channel, where dewatering, creek diversion, and installation of falsework may occur is comprised of a 40-foot buffer upstream and downstream of the proposed bridge, temporarily impacting up to 0.03 acres of riparian annual grassland.[28] Such impacts would likely be greater if work took place during the rainy season, as incident rainfall softens soils and the annual grasses and herbs that dominate this habitat would be recently germinated and would not provide the same soil stabilization functions that more established annual vegetation thatch does.

[27] H.T. Harvey & Associates. *Biological Resources Report.* December 2023. Page 40.
[28] Ibid.

Temporary construction disturbance to the vegetated riparian banks could lead to temporal loss of the soil stabilization functions that the riparian grassland provides, causing erosion and sedimentation, which would be significant if not prevented. Denuded banks may also be susceptible to increased or new infestations of weeds from lack of competition or introduction of new weed propagules on equipment used in this habitat.

Mitigation Measures: Implementation of the following mitigation measures would ensure that potential impacts to riparian habitat are less than significant.

MM BIO-2.1: **Work Period.** Construction work within the stream banks shall be restricted to the period of April 15 to October 15 (or as otherwise allowed by resource agency permits). Riparian restoration work (refer to MM BIO-2.4 below) using hand tools shall be completed within the wet season the same year following completion of the project.

MM BIO-2.2: **Work Area Delineation**. Permittee shall clearly show all riparian habitat on project plan sets and place flagging around the work limits within the stream, riparian, and wetland areas to prevent inadvertent impacts to areas not proposed to be disturbed by the project. Flagging shall be removed and appropriately disposed of within five calendar days of the completion of construction work. Access paths and staging areas shall be adequately fenced or flagged during the construction period to prevent damage to adjacent stream, riparian or wetland habitat.

MM BIO-2.3: **Prevention of Spread of Invasive Plant Species.** To prevent the spread of invasive weed infestations,

- All ground disturbing equipment used within the riparian corridors shall be washed (including tracks, and undercarriages) at a legally operating equipment yard both before and after being used at the site.
- All applicable construction materials used on-site, such as straw wattles, mulch, and fill material, shall be certified weed free.
- Invasive plant species with a "high" ecosystem impact rating by the California Invasive Plant Council (Cal-IPC; http://www.cal-ipc.org/paf/) shall be actively monitored and controlled in the first three years following planting. The percent cover of "high" invasive plant species shall be maintained at less than ten percent of the total plant cover in areas disturbed by project work. A qualified ecologist shall assess the type, distribution, and abundance of invasive plant species and recommend effective control measures. Invasive plants shall be removed from the project site on an as-needed basis.

MM BIO-2.4: **Revegetation of Temporary Impact Areas.** Temporary impact areas within the bed and banks of the channel shall be restored to preconstruction conditions or better. Restoration shall include restoring the topography of temporary impact areas to preconstruction conditions to the extent feasible, bank stabilization, and re-establishment of appropriate vegetation. A habitat-

appropriate, weed-free native seed mix or propagated plants shall be applied or installed. Species such as California buckwheat (*Eriogonum fasciculatum*), California fuschia (*Epilobium canum*), coyote brush (*Baccharis pilularis*), purple needlegrass (*Stipa pulchra*), and seaside heliotrope (*Heliotropium curassavicum*) would be appropriate. The project proponent shall not plant, seed, or otherwise introduce invasive exotic plant species. Revegetation shall be completed as soon as possible after grading at the project site is completed. Seeding placed between October 15 and April 15 shall be covered with broadcast straw, jute netting, coconut fiber blanket, or similar erosion control blanket. Erosion control products with monofilament or woven plastic strands shall not be used. The revegetation will be considered successful if the vegetative cover in the temporary impact areas reaches 75% of the existing baseline cover, excluding species rated as "high" by Cal-IPC.

A qualified ecologist will monitor conditions in the temporary riparian and stream/marsh impact areas for a minimum of 3 years, or until the success criteria for vegetation cover are attained, whichever is later. Prior to commencement of construction, the ecologist will establish at least four permanent photographic documentation stations (i.e., one station near each corner of the bridge) to provide representative views of vegetation cover. The locations of the photographic documentation stations will be recorded using a GPS, and the direction of the photographs documented with a compass. The ecologist will prepare site maps with the photo-documentation points clearly marked for the project site. Prior to commencement of construction, the ecologist will photographically document the pre-project condition of the project site from each documentation station and estimate the vegetation cover at each station. Following implementation of the project, including any seeding or plant installation, a qualified ecologist will visit the site at least once in late spring to photographically document the postconstruction condition of the project site and estimate vegetation cover. The ecologist will report the results of these inspections (including the assessment of overall vegetation cover described in this measure and the assessment of invasive plants described in Mitigation Measure BIO-5) in a brief memo following each year's site visit. Monitoring and maintenance may be extended if the success criteria are not attained by year 3. Remedial measures to be considered include, but are not limited to, supplemental planting or seeding, increased maintenance frequency, increased invasive plant removal activities, or alteration of maintenance strategies.

Implementation of MM BIO-2.1 through 2.4 would ensure that construction work within the stream banks would be confined to the period of April 15 to October 15; work areas would be delineated and flagged during construction activities; and temporary impact areas would be revegetated and restored to preconstruction conditions and monitored for a period of three years. Accordingly, project impacts would be reduced to less than significant with mitigation incorporated.

Work in and near riparian corridors could be indirectly impacted by spills of equipment fuels or oil entering the channel and cause degradation and contamination of the riparian habitat. The project

would, however, be required to comply with the Construction General Permit and will have a Stormwater Pollution Prevention Plan, best management practices would be employed to prevent such spills from entering the riparian corridor (refer to discussion under Impact HYD-1 in Section 4.10 of this Initial Study).

Impact BIO-3:	The project would not have a substantial adverse effect on state or federally protected wetlands through direct removal, filling, hydrological interruption, or other means. **(Less than Significant Impact with Mitigation Incorporated)**

Wetlands and other waters of the U.S./state are present within Penitencia East Channel in the form of intermittent stream/freshwater marsh. Jurisdictional wetlands in the channel bottom are supported by intermittent flows and presumably a high groundwater table and are dominated by non-native vegetation. Installation of the bridge and temporary work around the bridge would result in permanent and temporary impacts to the channel (refer to Figure 4.4-2). The bridge has, however, been designed to avoid the permanent loss of wetland or aquatic habitat due to the abutments or other structures.

The bridge would permanently shade 0.01 acres of intermittent stream/freshwater marsh.[29] This habitat is naturally dynamic, seasonally altering its species composition, cover, and locations every year. The shading would occur in a gradient under the bridge with the sunniest area closest to the bridge edges and the shadiest area along the centerline of the bridge. These unpredictable factors would result in a shift in species composition, cover, and location. Nevertheless, the altered habitat is expected to function as an intermittent stream/freshwater marsh comparable to the existing conditions.

The temporary work area within the channel, where dewatering, creek diversion, and installation of falsework may occur, consists of a 40-foot buffer upstream and downstream of the proposed bridge, temporarily impacting up to 0.02 acres of intermittent stream/freshwater marsh .[30] Temporary construction disturbance to the wetland habitat could lead to temporal loss of the soil stabilization functions that the wetland vegetation provides, causing erosion and sedimentation, which would be significant if not prevented.

Implementation of mitigation measures MM BIO-2.1 through BIO-2.4 would reduce impacts related to BIO-3 to a less than significant level.

Work in and near wetlands could be indirectly impacted by equipment fuels or oil entering the channel and cause degradation and contamination of the wetland habitat. The project would, however, comply with the Construction General Permit and will have a Stormwater Pollution Prevention Plan, best management practices would be employed to prevent such spills from entering the riparian corridor (refer to discussion under Impact HYD-1 in Section 4.10 of this Initial Study).

[29] H.T. Harvey & Associates. *Biological Resources Report.* December 2023. Page 43.
[30] Ibid.

Impact BIO-4:	The project would not interfere substantially with the movement of any native resident or migratory fish or wildlife species or with established native resident or migratory wildlife corridors, or impede the use of native wildlife nursery sites. **(Less than Significant Impact)**

Environmental corridors are segments of land that provide a link between different habitats while also providing cover. Development that fragments natural habitats (i.e., breaks them into smaller, disjointed pieces) can have a twofold impact on wildlife: first, as habitat patches become smaller they are unable to support as many individuals (patch size); and second, the area between habitat patches may be unsuitable for wildlife species to traverse (connectivity).

The project site is almost entirely developed and is situated within a dense urban development. The Penitencia East Channel does not provide an important movement pathway for aquatic or terrestrial wildlife species, as the channel dead-ends at the rail line 0.2 miles upstream of the site. Any animals attempting to move along the stream in an upstream direction would encounter this dead-end, rather than being able to move through the project area to reach higher-quality habitat upstream. Similarly, there are no source populations of aquatic or terrestrial animals upstream that would be moving downstream through the project area.[31] As a result, the proposed development would not result in the fragmentation of natural habitats, and any common, urban-adapted wildlife species that currently move through the project site would still be able to do so following project construction. Thus, the project would not interfere with the movement of any native resident or migratory fish or wildlife species or with established native resident or migratory wildlife corridors in the site vicinity, and impacts would be less than significant.

Impact BIO-5:	The project would not conflict with any local policies or ordinances protecting biological resources, such as a tree preservation policy or ordinance. **(Less than Significant Impact)**

The Tree and Planting Ordinance of the City of Milpitas protects significant trees, as defined by the Ordinance, including heritage trees, throughout the City. The proposed project would remove approximately 20 trees, including a number of protected trees. All the trees in the project area are ornamental and non-native including shamel ash and eucalyptus trees, with diameters ranging from three inches to 37 inches or more. All tree removal and replacement would be completed in compliance with the City's Tree Maintenance and Protection Ordinance, which states to plant at least two (2) trees for every one (1) protected tree removed, thereby ensuring the project would offset the loss of existing trees and reduce impacts from tree removal to a less than significant level. The replacement trees shall be commensurate with the size of the tree being removed, as determined by the Director of Planning or his or her designee.

[31] In the "source-sink" ecological model, the source is a high quality habitat that allows a species' population to increase (i.e. births + immigration > deaths + emigration), leading to a surplus of the species in question.

Impact BIO-6:	The project would not conflict with the provisions of an adopted Habitat Conservation Plan, Natural Community Conservation Plan, or other approved local, regional, or state habitat conservation plan. **(No Impact)**

The project site is not located within an area covered by an adopted Habitat Conservation Plan, Natural Community Conservation Plan, or other approved local, regional, or state habitat conservation plan. Therefore, the project would not conflict with any such plans.

4.5 CULTURAL RESOURCES

The following discussion is based in part on an Archeological Resources Assessment prepared by PaleoWest, LLC on July 28, 2021. A copy of the Archaeological Resources Assessment is on file at the City of Milpitas Public Works Department, Engineering Division. .

4.5.1 Environmental Setting

4.5.1.1 *Regulatory Framework*

Federal and State

National Historic Preservation Act

Federal protection is legislated by the National Historic Preservation Act of 1966 (NHPA) and the Archaeological Resource Protection Act of 1979. These laws maintain processes for determination of the effects on historical properties eligible for listing in the National Register of Historic Places (NRHP). Section 106 of the NHPA and related regulations (36 Code of Federal Regulations [CFR] Part 800) constitute the primary federal regulatory framework guiding cultural resources investigations and require consideration of effects on properties that are listed or eligible for listing in the NRHP. Impacts to properties listed in the NRHP must be evaluated under CEQA.

California Register of Historical Resources

The California Register of Historical Resources (CRHR) is administered by the State Office of Historic Preservation and encourages protection of resources of architectural, historical, archeological, and cultural significance. The CRHR identifies historic resources for state and local planning purposes and affords protections under CEQA. Under Public Resources Code Section 5024.1(c), a resource may be eligible for listing in the CRHR if it meets any of the NRHP criteria.[32]

Historical resources eligible for listing in the CRHR must meet the significance criteria described previously and retain enough of their historic character or appearance to be recognizable as historical resources and to convey the reasons for their significance. A resource that has lost its historic character or appearance may still have sufficient integrity for the CRHR if it maintains the potential to yield significant scientific or historical information or specific data.

The concept of integrity is essential to identifying the important physical characteristics of historical resources and, therefore, in evaluating adverse changes to them. Integrity is defined as “the authenticity of a historical resource’s physical identity evidenced by the survival of characteristics that existed during the resource's period of significance.” The processes of determining integrity are similar for both the CRHR and NRHP and use the same seven variables or aspects to define integrity that are used to evaluate a resource's eligibility for listing. These seven characteristics include 1) location, 2) design, 3) setting, 4) materials, 5) workmanship, 6) feeling, and 7) association.

[32] California Office of Historic Preservation. *CEQA Guidelines Section 15064.5(a)(3) and California Office of Historic Preservation Technical Assistance Series #6*. January 9, 2024.https://ohp.parks.ca.gov/pages/1069/files/technical%20assistance%20bulletin%206%202011%20update.pdf

California Native American Historical, Cultural, and Sacred Sites Act

The California Native American Historical, Cultural, and Sacred Sites Act applies to both state and private lands. The act requires that upon discovery of human remains, construction or excavation activity must cease, and the county coroner be notified.

Public Resources Code Sections 5097 and 5097.98

Section 15064.5 of the CEQA Guidelines specifies procedures to be used in the event of an unexpected discovery of Native American human remains on non-federal land. These procedures are outlined in Public Resources Code Sections 5097 and 5097.98. These codes protect such remains from disturbance, vandalism, and inadvertent destruction, establish procedures to be implemented if Native American skeletal remains are discovered during construction of a project, and establish the Native American Heritage Commission (NAHC) as the authority to resolve disputes regarding disposition of such remains.

Pursuant to Public Resources Code Section 5097.98, in the event of human remains discovery, no further disturbance is allowed until the county coroner has made the necessary findings regarding the origin and disposition of the remains. If the remains are of a Native American, the county coroner must notify the NAHC. The NAHC then notifies those persons most likely to be related to the Native American remains. The code section also stipulates the procedures that the descendants may follow for treating or disposing of the remains and associated grave goods.

Local

City of Milpitas General Plan 2040

The following policies in the City's General Plan have been adopted for the purpose of reducing or avoiding impacts related to cultural resources and are applicable to the proposed project.

Policies	Description
Policy CON 4-1	Review proposed developments and work in conjunction with the California Historical Resources Information System, Northwest Information Center at Sonoma State University, to determine whether project areas contain known archaeological resources, either prehistoric and/or historic-era, or have the potential for such resources.
Policy CON 4-2	If found during construction, ensure that human remains are treated with sensitivity and dignity, and ensure compliance with the provisions of California Health and Safety Code Section 7050.5 and California Public Resources Code Section 5097.98.
Policy CON 4-3	Work with Native American representatives to identify and appropriately address, through avoidance or mitigation, impacts to Native American cultural resources and sacred sites during the development review process
Policy CON 4-4	Consistent with State, local, and tribal intergovernmental consultation requirements such as SB 18 and AB 52, the City shall consult as necessary with

Policies	Description
	Native American tribes that may be interested in proposed new development and land use policy changes.
Policy CON 5-1	Protect significant historic resources and use these resources to promote a sense of place and history in Milpitas through implementation of the Milpitas Cultural Resources Preservation Program (Municipal Code, Title XI, Chapter 4), the Conceptual Historic Resources Master Plan, the conservation and preservation of the City's historical collection at the Milpitas Community Museum, and other applicable codes, regulations, and area plans.

City of Milpitas Metro Area Specific Plan

The MMSP adopted the following policies for the purpose of avoiding or mitigating cultural resource impacts resulting from planned development within the MMSP area, including the following:

Policies	Description
SC 7	Any future ground-disturbing activities, including grading, in the Metro Plan Area shall be monitored by a qualified archaeologist to ensure that the accidental discovery of significant archaeological materials and/or human remains is handled according to State CEQA Guidelines Section 15064.5 regarding discovery of archaeological sites and burial sites, and State CEQA Guidelines Section 15126.4(b) identifying mitigation measures for impacts on historic and cultural resources (reference CEQA Sections 21083.2 and 21084.1). A Native American monitor will also be present during future ground disturbing activities due to the high potential for inadvertent discoveries of archaeological materials and/or human remains. Prior to commencement of ground-disturbing activities, the City shall ensure that the general contractor and those conducting ground-disturbing activities are given cultural sensitivity training. Cultural sensitivity training will ensure that any cultural material encountered during ground-disturbing activities due to the high potential for inadvertent discoveries of archaeological materials and/or human remains. Prior to commencement of ground-disturbing activities, the City shall ensure that the general contractor and those conducting ground-disturbing activities are given cultural sensitivity training. Cultural sensitivity training will ensure that any cultural material encountered during ground-disturbing activities is protected and treated with culturally appropriate dignity. This training will be administered by a Native American monitor and a qualified archaeologist. In the event that buried cultural materials are encountered, construction will be temporarily halted until a mitigation plan can be developed. In the event that human remains are encountered, the developer shall halt work in the immediate area and contact the Santa Clara County coroner and the City of Milpitas. The coroner will then contact the Native American Heritage Commission (NAHC), which will in turn contact the appropriate Most Likely Descendant (MLD). The MLD will then have the opportunity to make a recommendation for the respectful treatment of the Native American remains and related burial goods.

4.5.1.2 *Existing Conditions*

Prehistoric Subsurface Resources

Native Americans occupied Santa Clara Valley and the greater Bay Area for more than 5,000 years. The exact time period of the Ohlone (originally referred to as Costanoan) migration into the Bay Area is debated by scholars. Dates of the migration range between 3,000 B.C. and 500 A.D. Regardless of the actual time frame of their initial occupation of the Bay Area and, in particular, Santa Clara Valley, it is known that the Ohlone had a well-established population of approximately 7,000 to 11,000 people with a territory that ranged from the San Francisco Peninsula and the East Bay south through the Santa Clara Valley and down to Monterey and San Juan Bautista.

Mission Period

Spanish explorers began coming to Santa Clara Valley in 1769. From 1769 to 1776 several expeditions were made to the area during which time the explorers encountered the Native American tribes who had occupied the area since prehistoric times. Expeditions in the Bay Area and throughout California lead to the establishment of the California Missions and, in 1777, the Pueblo de San José de Guadalupe was established.

Post-Mission Period to Mid-20th Century

The town of Milpitas was founded in the mid-1800's. Prior to 1856, the lands were used for agricultural purposes. By the 1880s, the town of Milpitas' population had increased to 200 people and a railroad line was extended through the region in 1869. By 1922, the town's population increased to 800 and the Western Pacific rail line was also completed. By 1953, Ford Motor Company purchased a 160-acre tract in the City which was used for automobile assembly. Due to the increase in jobs, the town of Milpitas was incorporated in 1954.

Historically, the project site was located in an undeveloped portion of Rancho Milpitas and was surrounded by farms of cultivated crops and orchards. Farms ranged in size from approximately 40 to 250 acres and included a rural residence. The project site remained undeveloped until it was used for agricultural production as row crops between 1931 and 1968. Between 1975 and 1982, north and south of Penitencia East Channel developed with light industrial commercial buildings. In 2018, a warehouse was demolished north of the project site to accommodate construction of multi-family residential buildings.

Historical and Archaeological Resources

Areas within the City may contain known historical or unknown historical and archaeological resources which have not yet identified. The existing office building planned for demolition was built in 1980 and is not considered a historic resource under CEQA. No other known previously recorded cultural resources have been identified on the project site or in the immediate vicinity.

4.5.2 Impact Discussion

	Potentially Significant Impact	Less than Significant with Mitigation Incorporated	Less than Significant Impact	No Impact
Would the project:				
1) Cause a substantial adverse change in the significance of a historical resource pursuant to CEQA Guidelines Section 15064.5?	☐	☐	☐	☒
2) Cause a substantial adverse change in the significance of an archaeological resource pursuant to CEQA Guidelines Section 15064.5?	☐	☒	☐	☐
3) Disturb any human remains, including those interred outside of dedicated cemeteries?	☐	☒	☐	☐

Impact CUL-1: The project would not cause a substantial adverse change in the significance of a historical resource pursuant to CEQA Guidelines Section 15064.5. **(No Impact)**

There are no historical resources present on the project site pursuant to CEQA Guidelines Section 15064.5. Therefore, the proposed project would not affect historic resources.

Impact CUL-2: The project would not cause a substantial adverse change in the significance of an archaeological resource pursuant to CEQA Guidelines Section 15064.5. **(Less than Significant Impact with Mitigation Incorporated)**

An archaeological literature search at the Northwest Information Center of the California Historical Resources Information System (CHRIS) database was completed for the project site and surrounding area. Based on the results of the literature search and the site's proximity to Penitencia East Channel, the project site has a moderate to high sensitivity for buried archaeological resources because Native American populations occupied areas around waterways. Project construction would require approximately 280 cubic yards of soil to be excavated to a maximum depth of 60 feet and exported off-site. Grading and other excavation activities on the site could potentially damage unrecorded subsurface resources.

Mitigation Measures: Implementation of the following mitigation measures would ensure that potential impacts to subsurface archaeological resources are less than significant.

MM CUL-2.1: Prior to the issuance of any grading permits, the project applicant shall retain a qualified archaeologist and engage a Native American monitor approved by Tamien Nation to be present at the site during all ground disturbing activities. Submit a copy of the agreement to the Director of Engineering or the Director's designee.

MM CUL-2.2: Pursuant to CEQA Guidelines 15064.5 (f), if potentially significant cultural resources are discovered during ground-disturbing activities associated with project preparation, construction, or completion, work shall halt in that area until a qualified archaeologist can assess the significance of the find, and, if necessary, develop appropriate treatment measures in consultation with Santa Clara County, Tamien Nation, and other appropriate agencies and interested parties. If such resources are found to be Native American, the treatment measures shall obtain approval from Tamien Nation. A qualified archaeologist shall follow accepted professional standards in recording any find including submittal of the standard Department of Parks and Recreation (DPR) Primary Record forms (Form DPR 523) and locational information to the California Historical Resources Information Center office (Northwest Information Center). The consulting archaeologist shall also evaluate such resources for significance per California Register of Historical Resources eligibility criteria (Public Resources Code Section 5024.1; Title 14 CCR Section 4852). If the archaeologist determines that the find does not meet the CEQA standards of significance, construction shall proceed. In the event the archaeologist determines that further information is needed to evaluate significance, the Engineering Department staff shall be notified and a data recovery plan shall be prepared. If such resources are found to be Native American, a Tamien Nation Tribal representative shall be engaged for evaluation and the data recovery plan shall be prepared in consultation with Tamien Nation..

With implementation of MM CUL-2.1 and 2.2, any unknown culturally significant archaeological resources encountered during construction would be identified, evaluated and appropriately treated in accordance with the recommendations of a qualified archaeologist. Accordingly, the project would not cause a substantial adverse change in the significant of an archaeological resource.

Impact CUL-3: The project would not disturb any human remains, including those interred outside of dedicated cemeteries. **(Less than Significant Impact with Mitigation Incorporated)**

Human graves are most often associated with prehistoric occupation sites. Although unlikely, it is possible that project construction activities, such as excavation and grading, could disturb as-yet undiscovered human remains at the project sites. If human remains were unearthed during project construction, damage to or destruction of culturally significant human remains would be a potentially significant impact.

Mitigation Measure: Implementation of the following mitigation measures would ensure that potential impacts to undiscovered human remains is at a less than significant level.

MM CUL-3.1: In the event that human remains are encountered, the City shall halt work in the immediate area and contact the Santa Clara County coroner. The coroner will make a determination as to whether the remains are Native American. If the remains are believed to be Native American, the coroner will contact the

Native American Heritage Commission (NAHC) which will designate the Most Likely Descendants (MLD). The MLD will inspect the remains and make a recommendation for the respectful treatment of the remains and related burial goods.

Implementation of MM CUL-3.1 would ensure that any human remains encountered during ground-disturbing activities are appropriately identified and treated and the impact reduced to a less than significant level.

4.6 ENERGY

The following discussion is based, in part, on an Air Quality and Greenhouse Gas Assessment prepared for the project by Illingworth & Rodkin, Inc. The report, dated November 10, 2021, is attached to this Initial Study as Appendix A.

4.6.1 Environmental Setting

4.6.1.1 *Regulatory Framework*

Federal and State

Energy Star and Fuel Efficiency

At the federal level, energy standards set by the EPA apply to numerous consumer products and appliances (e.g., the EnergyStar™ program). The EPA also sets fuel efficiency standards for automobiles and other modes of transportation.

Renewables Portfolio Standard Program

In 2002, California established its Renewables Portfolio Standard Program, with the goal of increasing the percentage of renewable energy in the state's electricity mix to 20 percent of retail sales by 2010. Governor Schwarzenegger issued Executive Order (EO) S-3-05, requiring statewide emissions reductions to 80 percent below 1990 levels by 2050. In 2008, EO S-14-08 was signed into law, requiring retail sellers of electricity serve 33 percent of their load with renewable energy by 2020. In October 2015, Governor Brown signed SB 350 to codify California's climate and clean energy goals. A key provision of SB 350 requires retail sellers and publicly owned utilities to procure 50 percent of their electricity from renewable sources by 2030. SB 100, passed in 2018, requires 100 percent of electricity in California to be provided by 100 percent renewable and carbon-free sources by 2045.

Executive Order B-55-18 To Achieve Carbon Neutrality

In September 2018, Governor Brown issued an executive order, EO-B-55-18 To Achieve Carbon Neutrality, setting a statewide goal "to achieve carbon neutrality as soon as possible, and no later than 2045, and achieve and maintain net negative emissions thereafter." The executive order requires CARB to "ensure future Scoping Plans identify and recommend measures to achieve the carbon neutrality goal." EO-B-55-18 supplements EO S-3-05 by requiring not only emissions reductions, but also that, by no later than 2045, the remaining emissions be offset by equivalent net removals of CO_2 from the atmosphere through sequestration.

California Building Standards Code

The Energy Efficiency Standards for Residential and Nonresidential Buildings, as specified in Title 24, Part 6 of the California Code of Regulations (Title 24), was established in 1978 in response to a legislative mandate to reduce California's energy consumption. Title 24 is updated approximately

every three years.[33] Compliance with Title 24 is mandatory at the time new building permits are issued by city and county governments.[34]

California Green Building Standards Code

CALGreen establishes mandatory green building standards for buildings in California. CALGreen was developed to reduce GHG emissions from buildings, promote environmentally responsible and healthier places to live and work, reduce energy and water consumption, and respond to state environmental directives. CALGreen covers five categories: planning and design, energy efficiency, water efficiency and conservation, material and resource efficiency, and indoor environmental quality.

Advanced Clean Cars Program

CARB adopted the Advanced Clean Cars program in 2012 in coordination with the EPA and National Highway Traffic Safety Administration. The program combines the control of smog-causing pollutants and GHG emissions into a single coordinated set of requirements for vehicle model years 2015 through 2025. The program promotes development of environmentally superior passenger cars and other vehicles, as well as saving the consumer money through fuel savings.[35]

Local

City of Milpitas General Plan 2040

The following policies in the City's General Plan have been adopted for the purpose of avoiding or mitigating impacts to energy supplies resulting from planned development within the City, including the following:

Policies	Description
Policy CIR 2.1	Promote multimodal transportation options by developing an interconnected system of streets, roads, bridges, and highways that provides continuous, efficient, safe and convenient travel for all users regardless of mode, age or ability and encourage users to walk, ride a bicycle, or use transit for shorter, local trips.
Policy PROS 1-15	Design and maintain park and recreation facilities to minimize water, energy and chemical (e.g., pesticides and fertilizer) use. Incorporate the use of recycled water, native and/ or drought-resistant vegetation and ground cover where appropriate. Pursue opportunities for multi-beneficial park developments that incorporate flood control facilities, stormwater management and groundwater recharge areas.

[33] California Building Standards Commission. "California Building Standards Code." Accessed January 9, 2024. https://www.dgs.ca.gov/BSC/Codes#@ViewBag.JumpTo.
[34] California Energy Commission (CEC). "2022 Building Energy Efficiency Standards." Accessed January 9, 2024. https://www.energy.ca.gov/programs-and-topics/programs/building-energy-efficiency-standards/2019-building-energy-efficiency.
[35] California Air Resources Board. "The Advanced Clean Cars Program." Accessed January 9, 2024. https://ww2.arb.ca.gov/our-work/programs/advanced-clean-cars-program.

Policies	Description
Policy CON 1-2	Ensure all development projects comply with the mandatory energy efficiency requirements of the California Green Building Standards Code (CALGreen).
Policy CON 1-3	Support innovative green building best management practices including, but not limited to, LEED certification, and encourage project applicants to exceed the most current "green" development standards in the California Code of Regulations (CCR), Title 24, as feasible.
Policy CON 1-9	Encourage site planning and building techniques that promote energy conservation. Where feasible, encourage projects to take advantage of shade, prevailing winds, landscaping, sunscreens, building orientations, and material choices that reduce energy use.
Policy UCS 5-3	Reduce municipal waste generation by increasing recycling, on-site composting, and mulching, where feasible, at municipal facilities, as well as using resource efficient landscaping techniques in new or renovated medians and parks.

City of Milpitas Climate Action Plan

The City of Milpitas' adopted the Climate Action Plan (CAP) Update in2022. It is designed to streamline environmental review of future development projects in the City of Milpitas consistent with the CEQA Guidelines Section 15183.5(b) and the BAAQMD Air Quality Guidelines. The CAP identifies a strategy, GHG reduction measures, and implementation strategies to comply with AB 32 and SB 375. To that end, the CAP includes the following policies which are intended to conserve energy and promote alternative modes of transportation:

Measures	Description
TR-1.1	Reduce VMT from new development in compliance with SB 743.
TR-3.2	Increase transit ridership.

4.6.1.2 *Existing Conditions*

Total energy usage in California was approximately 6,279 trillion British thermal units (Btu) in the year 2021, the most recent year for which this data was available.[36] Out of the 50 states, California is ranked second in total energy consumption and 49^{h} in energy consumption per capita. The breakdown by sector was approximately 18 percent (1,229 trillion Btu) for residential uses, 17 percent (1,157 trillion Btu) for commercial uses, 24 percent (1,596 trillion Btu) for industrial uses, and 41 percent (2,784 trillion Btu) for transportation.[37] This energy is primarily supplied in the form of natural gas, petroleum, nuclear electric power, and hydroelectric power.

[36] United States Energy Information Administration. "State Profile and Energy Estimates, 2021." Accessed January 9, 2024. https://www.eia.gov/state/?sid=CA#tabs-2.
[37] Ibid.

Electricity

Electricity in Santa Clara County in 2022 was consumed primarily by the commercial sector (75 percent), followed by the residential sector consuming 25 percent. In 2022, a total of approximately 17,102 gigawatt hours (GWh) of electricity was consumed in Santa Clara County.[38]

The community-owned Silicon Valley Clean Energy (SVCE) is the electricity provider for the City of Milpitas.[39] SVCE sources the electricity and the Pacific Gas and Electric Company (PG&E) delivers it to customers over their existing utility lines. PG&E generates or buys electricity from hydroelectric, nuclear, renewable, natural gas, and coal facilities.

Natural Gas

PG&E also provides natural gas services within Milpitas. In 2018, approximately one percent of California's natural gas supply came from in-state production, while the remaining supply was imported from other western states and Canada.[40] In 2021, natural gas facilities provided seven percent of PG&E's electricity delivered to retail customers; nuclear plants provided 39 percent; hydroelectric operations provided four percent; renewable energy facilities including solar, geothermal, and biomass provided 50 percent.[41] Transportation accounted for one percent of natural gas use in California.

Fuel for Motor Vehicles

In 2022, California produced 124 million barrels of crude oil and in 2019, 11.7 billion gallons of gasoline were sold in California. [42], [43] The average fuel economy for light-duty vehicles (autos, pickups, vans, and sport utility vehicles) in the United States has steadily increased from about 13.1 miles per gallon (mpg) in the mid-1970s to 25.4 mpg in 2021.[44] Federal fuel economy standards have changed substantially since the Energy Independence and Security Act was passed in 2007. That standard, which originally mandated a national fuel economy standard of 35 miles per gallon by the

[38] California Energy Commission. Energy Consumption Data Management System. "Electricity Consumption by County." January 9, 2024. http://ecdms.energy.ca.gov/elecbycounty.aspx.
[39] Silicon Valley Clean Energy. "Frequently Asked Questions." January 9, 2024. https://www.svcleanenergy.org/faqs.
[40] California Gas and Electric Utilities. 2019 *California Gas Report.* January 9, 2024. https://www.socalgas.com/regulatory/documents/cgr/2019_CGR_Supplement_7-1-19.pdf.
[41] Pacific Gas and Electric Company. "Exploring Clean Energy Solutions." Accessed January 10, 2024. https://www.pge.com/en_US/about-pge/environment/what-we-are-doing/clean-energy-solutions/clean-energy-solutions.page?WT.mc_id=Vanity_cleanenergy.
[42] U.S. Energy Information Administration. "Petroleum & Other Liquids, California Field Production of Crude Oil." January 10, 2024. https://www.eia.gov/dnav/pet/hist/LeafHandler.ashx?n=pet&s=mcrfpca1&f=a
[43] California Department of Tax and Fee Administration. "Net Taxable Gasoline Gallons." Accessed January 10, 2024. https://www.cdtfa.ca.gov/dataportal/dataset.htm?url=VehicleTaxableFuelDist.
[44] United States Environmental Protection Agency. "The 2022 EPA Automotive Trends Report: Greenhouse Gas Emissions, Fuel Economy, and Technology since 1975." December 2022.

year 2020, was updated in April 2022 to require all cars and light duty trucks achieve an overall industry average fuel economy of 49 mpg by model year 2026. [45,46]

Energy Use of Existing Development

The project site is currently developed with an approximately 41,307 square foot office building and associated surface parking lot. Energy (in the form of electricity and natural gas) is used by the existing development primarily for heating and cooling, lighting, and water heating. The existing development uses approximately 669,173 kilo British thermal units (kBtu)[47] of natural gas per year and 758,539 kilowatt-hours (kWh)[48] of electricity per year.[49] Traffic associated with the existing development generates 727,801 vehicle miles traveled annually. Assuming an annual fuel economy of 24.9 miles per gallon (mpg), the existing development uses approximately 29,230 gallons of gasoline per year.

4.6.2 Impact Discussion

	Potentially Significant Impact	Less than Significant with Mitigation Incorporated	Less than Significant Impact	No Impact
Would the project:				
1) Result in a potentially significant environmental impact due to wasteful, inefficient, or unnecessary consumption of energy resources, during project construction or operation?	☐	☐	☒	☐
2) Conflict with or obstruct a state or local plan for renewable energy or energy efficiency?	☐	☐	☒	☐

Impact EN-1: The project would not result in a potentially significant environmental impact due to wasteful, inefficient, or unnecessary consumption of energy resources, during project construction or operation. **(Less than Significant Impact)**

Energy would be consumed during the construction and operational phases of the project, as discussed below.

[45] United States Department of Energy. *Energy Independence & Security Act of 2007*. Accessed January 10, 2024. http://www.afdc.energy.gov/laws/eisa.
[46] United States Department of Transportation. "USDOT Announces New Vehicle Fuel Economy Standards for Model Year 2024-2026." Accessed January 10, 2024. https://www.nhtsa.gov/press-releases/usdot-announces-new-vehicle-fuel-economy-standards-model-year-2024-2026
[47] The Btu is a unit of heat defined as the amount of heat required to raise the temperature of one pound of water by one degree Fahrenheit.
[48] The kilowatt-hour is a unit of energy equal to 3600 kilojoules.
[49] Illingworth & Rodkin, Inc. *S. Milpitas Boulevard Vehicular Bridge Air Quality Assessment*. November 10, 2021.

Energy Use During Construction

Construction equipment would consume energy during the demolition of the existing office building and associated surface parking lot and during construction of the proposed bridge and roadway connection. Petroleum-based fuels such as diesel fuel and gasoline would be the primary sources of energy for these tasks except as described below.

Construction of the project would require demolition, site preparation, grading, excavation, trenching, paving, and bridge assembly. The overall construction schedule and process is designed to be efficient in order to avoid excess monetary costs. That is, equipment and fuel would not be used wastefully on the project site because of the added expense associated with renting the equipment, maintaining it, and fueling it. Further, construction of the project would occur in an urbanized area in proximity to roadways, construction supplies, and workers, making it more efficient than construction occurring in outlying, undeveloped areas. For these reasons, the construction process for the project is efficient. Additionally, energy would not be wasted or used inefficiently by construction equipment as the proposed project shall implement BAAQMD's basic control measures (MM AIR-3.1), which would reduce vehicle idling times and ensure equipment is operating properly, and MM AIR-3.2, which would require the project to select construction equipment that would minimize emissions by 86 percent. For these reasons, project construction would not use energy in a wasteful manner and would have a less than significant impact.

Energy Use During Project Operation

Vehicle trips associated with operation of the proposed bridge and roadway connection would consume gasoline, and illumination of the bridge would consume electricity. No natural gas would be utilized by the proposed project. As documented in Section 4.17 Transportation under Impact TRN-2, the project would reduce vehicle miles traveled (VMT) and, therefore, would reduce the amount of gasoline consumed in comparison with existing conditions. Further, illumination of the bridge would consume less electricity than the existing office building and associated surface parking lot, which requires electricity for building heating and cooling, lighting, appliance use, and parking lot illumination. Therefore, since the proposed project would result in a decrease in gasoline, electricity, and natural gas consumption compared to the existing development, operation of the project would have no impact due to wasteful, inefficient, or unnecessary consumption of energy resources.

Impact EN-2:	The project would not conflict with or obstruct a state or local plan for renewable energy or energy efficiency. **(Less than Significant Impact)**

As discussed under Impact EN-1, the project would result in decreased consfumption of electricity, gasoline, and natural gas in comparison with existing conditions. Further, as required by General Plan Policy CON 1-2, the project would comply with Title 24 and CALGreen requirements. All project landscaping would be required by General Plan policies PROS 1-15 and UCS 5-3 to be resource efficient by minimizing water and chemical (e.g., pesticides and fertilizer) use, and by incorporating the use of recycled water, native and/ or drought-resistant vegetation and ground cover where appropriate. Lastly, the proposed bridge and roadway connection would improve bicycle and pedestrian connectivity and would reduce VMT (refer to the discussion under Section 4.17 Transportation under Impact TRN-2). For these reasons, the project would not conflict with or

obstruct a state or local plan for renewable energy or energy efficiency and would have a less than significant impact.

4.7 GEOLOGY AND SOILS

The following discussion is based in part on a Bridge Design Geotechnical report prepared by ENGEO. The report, dated January 5, 2017, is included in this Initial Study as Appendix **C**.

4.7.1 Environmental Setting

4.7.1.1 *Regulatory Framework*

State

Alquist-Priolo Earthquake Fault Zoning Act

The Alquist-Priolo Earthquake Fault Zoning Act was passed following the 1971 San Fernando earthquake. The act regulates development in California near known active faults due to hazards associated with surface fault ruptures. Alquist-Priolo maps are distributed to affected cities, counties, and state agencies for their use in planning and controlling new construction. Areas within an Alquist-Priolo Earthquake Fault Zone require special studies to evaluate the potential for surface rupture to ensure that no structures intended for human occupancy are constructed across an active fault.

Seismic Hazards Mapping Act

The Seismic Hazards Mapping Act (SHMA) was passed in 1990 following the 1989 Loma Prieta earthquake. The SHMA directs the California Geological Survey (CGS) to identify and map areas prone to liquefaction, earthquake-induced landslides, and amplified ground shaking. CGS has completed seismic hazard mapping for the portions of California most susceptible to liquefaction, landslides, and ground shaking, including the central San Francisco Bay Area. The SHMA requires that agencies only approve projects in seismic hazard zones following site-specific geotechnical investigations to determine if the seismic hazard is present and identify measures to reduce earthquake-related hazards.

California Building Standards Code

The CBC prescribes standards for constructing safe buildings. The CBC contains provisions for earthquake safety based on factors including occupancy type, soil and rock profile, ground strength, and distance to seismic sources. The CBC requires that a site-specific geotechnical investigation report be prepared for most development projects to evaluate seismic and geologic conditions such as surface fault ruptures, ground shaking, liquefaction, differential settlement, lateral spreading, expansive soils, and slope stability. The CBC is updated every three years; the 2022 CBC went into effect on January 1, 2023.

Caltrans Seismic Design Criteria

The California Department of Transportation (Caltrans) has Seismic Design Criteria (SDC) which describes new and currently practiced seismic design and analysis methodologies for the design of new bridges in California. The SDC adopts a performance-based approach specifying minimum levels of structural system performance, component performance, analysis, and design practices for ordinary standard bridges. The SDC has been developed with input from the Caltrans Offices of

Structure Design, Earthquake Engineering and Design Support, and Materials and Foundations. Memo 20-1 Seismic Design Methodology (Caltrans 1999) outlines the bridge category and classification, seismic performance criteria, seismic design philosophy and approach, seismic demands and capacities on structural components, and seismic design practices that collectively make up Caltrans' seismic design.

California Division of Occupational Safety and Health Regulations

Excavation, shoring, and trenching activities during construction are subject to occupational safety standards for stabilization by the California Department of Industrial Relations, Division of Occupational Safety and Health (Cal/OSHA) under Title 8 of the California Code of Regulations and Excavation Rules. These regulations minimize the potential for instability and collapse that could injure construction workers on the site.

Public Resources Code Section 5097.5

Paleontological resources are the fossilized remains of organisms from prehistoric environments found in geologic strata. They range from mammoth and dinosaur bones to impressions of ancient animals and plants, trace remains, and microfossils. These materials are valued for the information they yield about the history of the earth and its past ecological settings. California Public Resources Code Section 5097.5 specifies that unauthorized removal of a paleontological resource is a misdemeanor. Under the CEQA Guidelines, a project would have a significant impact on paleontological resources if it would disturb or destroy a unique paleontological resource or site or unique geologic feature.

Local

City of Milpitas General Plan 2040

The following policies in the City's General Plan have been adopted for the purpose of reducing or avoiding impacts related to geologic and seismic hazards and are applicable to the project.

Policies/Actions	Description
Policy SA 1-1	Require development to reduce risks to life and property associated with earthquakes, liquefaction, erosion, landslides, and unstable soil conditions.
Policy SA 1-2	Ensure that all new development and construction is in conformance with all applicable building standards related to geologic and seismic safety.
Policy SA 1-3	Require geotechnical investigations to be completed prior to approval of any public safety or other critical facilities, in order to ensure that these facilities are constructed in a way that mitigates site-specific seismic and/or geologic hazards.
Policy SA 1-4	Development in areas subject to unstable soil and/or geologic conditions shall be reviewed by qualified engineers and or geologists prior to development in order to ensure the safety and stability of all new construction.
Policy SA 1-5	Require an erosion and sediment control plan prepared by a civil engineer, or other professional who is qualified to prepare such a plan, as part of any grading permit application for new development. The erosion and sediment control plan shall

	delineate measures to appropriately and effectively minimize soil erosion and sedimentation.
Policy SA 1-6	All structures and building foundations requiring a building permit located within areas containing expansive soils, or other soils conditions which, if not corrected, would lead to structural defects, or unsafe conditions, shall be reviewed by a qualified engineer, who shall recommend corrective actions as appropriate to remedy onsite soil conditions.
Policy SA 1-7	All structures and additions requiring a building permit shall be designed and engineered to comply with the most current version of the California Code of Regulations (CCR), Title 24.
Action CON 4b	Require all development, infrastructure, and other ground-disturbing projects to comply with the following conditions in the event of an inadvertent discovery of cultural resources or human remains: • If construction or grading activities result in the discovery of significant historic or prehistoric archaeological artifacts or unique paleontological resources, all work within 100 feet of the discovery shall cease, the Planning Department shall be notified, the resources shall be examined by a qualified archaeologist, paleontologist, or historian for appropriate protection and preservation measures; and work may only resume when appropriate protections are in place and have been approved by the Planning Department.

City of Milpitas Municipal Code

Title II, Chapter 13 of the Milpitas Municipal Code sets forth rules, regulations and controls on grading, excavation, paving, and earth work construction to ensure that that the design, scope and location of grading and related activities cause minimum disturbance to terrain and natural features, to provide erosion control and to prevent sedimentation or damage to off-site property.

4.7.1.2 *Existing Conditions*

Regional Geologic Conditions

The City of Milpitas is located within the northeastern Santa Clara Valley, a broad alluvial basin underlain by sedimentary and metamorphic rocks of the Franciscan Complex. The Santa Clara Valley is bounded by the Diablo Range to the east and the Santa Cruz Mountains to the west. The Valley was formed when sediments derived from both mountain ranges were exposed by tectonic uplift and regression of the inland sea which previously inundated this area.

On-Site Geologic Conditions

Soils

Based on the test bores drilled as part of a geotechnical report (Appendix C) , subsurface soils on the project site are categorized as younger Holocene-era alluvial fan deposits. The predominant soils underlying the project site consist of a surficial layer of stiff to very stiff lean clay and fat clay deposits that extend to the maximum depth of 61.5 feet bgs. Soils encountered during these borings had a Plasticity Index (PI) greater than 15 and were characterized as having a moderate to high expansion potential.

Seismicity

The project site is located within the seismically active San Francisco Bay Area. The San Francisco Bay Area contains several faults that are capable of generating earthquakes of magnitude 7.0 or higher. Active faults closest to the project site are listed below in Table 4.7-1.

Table 4.7-1 Faults Nearest to Project Site

Fault Name	Approximate Distance (mi)	Orientation from Site
Silver Creek	1.9	Southwest
Hayward – Southeast Extension	2.4	Northeast
Hayward Fault – Main Trace	5.5	South/Southwest
Calaveras	5.9	East

Source: United States Geologic Survey. "Quaternary Fault and Fold Database of the United States." Accessed January 10, 2024. https://www.usgs.gov/natural-hazards/earthquake-hazards/faults?qt-science_support_page_related_con=4#qt-science_support_page_related_con

The project site is not located within an Earthquake Fault Zone as delineated on the most recent Alquist-Priolo Map.[50]

Liquefaction and Lateral Spreading

Soil liquefaction occurs when a cohesionless saturated or partially saturated soil substantially loses strength and stiffness in response to an applied stress, such as shaking during an earthquake or other sudden change in stress conditions, in which soil material that is ordinarily a solid behaves like a liquid. It is associated with loose, low-plasticity soils and near-surface groundwater levels. Soil qualities highly prone to liquefaction include clean, loose, saturated, uniformly graded, fine-grained sands. Soil characteristics moderately prone to liquefaction are loose to medium dense gravels, silty sands, low-plasticity silts, and some low-plasticity clays. The project site is in a Liquefaction Hazard Zone according to the State Hazard Zones map.[51] However, based upon the boring samples collected

[50] California Geological Survey. "Earthquake Zones of Required Investigation". Map. January 9, 2024. https://maps.conservation.ca.gov/cgs/EQZApp/App/.
[51] Ibid.

which exhibited moderately to highly expansive stiff to very stiff cohesive materials, the risk of liquefaction is low.

Lateral spreading typically occurs as a form of horizontal displacement of relatively flat-lying soil toward an open or "free" face such as an open body of water, channel, or excavation. This movement is often associated with liquefaction and commonly occurs on gentle slopes in seismically active regions. Lateral spread presents a significant hazard to the integrity of buildings and other structures. The project site crosses over the Penitencia East Channel, which exhibits a steep slope on either side of the stream bank that may act as a free face for lateral spreading should subsurface soils liquefy during a seismic event.

Landslides

Landslides occur when slopes become unstable, and masses of earth material move downslope. Landslides are generally considered to be rapid events, often triggered during periods of rainfall or by earthquakes. Hilly or slope areas have a tendency to fail and result in landslides. The project site is not located in Landslide Hazard Zone.[52]

Groundwater

Groundwater was encountered in the test bores on-site at 11 feet bgs (Appendix C). Groundwater levels can fluctuate for a variety of factors, including seasonal precipitation, extraction from wells, and recharge due to irrigation or other methods.

Paleontological Resources

Paleontological resources are the mineralized (fossilized) remains of organisms, exclusive of human remains or artifacts, from prehistoric environments. The project site is situated on younger alluvial fan deposits of Holocene age that are considered sensitive for vertebrate fossils, which are considered a significant paleontological resource. There are no unique geologic features (i.e. bedrock, rock outcroppings) or known paleontological resources present on-site, and the nearest fossil recovery site is located 2.5 miles to the east.[53]

[52] California Geological Survey. *Earthquake Zones of Required Investigation*. Accessed January 10, 2024. https://maps.conservation.ca.gov/cgs/eqzapp/app/.
[53] Macrostrat. *Geologic Map*. January 9, 2024. https://macrostrat.org/map/#/z=14.0/x=-121.8809/y=37.4069/bedrock/lines/satellite/fossils/columns/

4.7.2 Impact Discussion

	Potentially Significant Impact	Less than Significant with Mitigation Incorporated	Less than Significant Impact	No Impact
Would the project:				
1) Directly or indirectly cause potential substantial adverse effects, including the risk of loss, injury, or death involving:				
- Rupture of a known earthquake fault, as delineated on the most recent Alquist-Priolo Earthquake Fault Zoning Map issued by the State Geologist for the area or based on other substantial evidence of a known fault (refer to Division of Mines and Geology Special Publication 42)?	☐	☐	☒	☐
- Strong seismic ground shaking?	☐	☐	☒	☐
- Seismic-related ground failure, including liquefaction?	☐	☐	☒	☐
- Landslides?	☐	☐	☒	☐
2) Result in substantial soil erosion or the loss of topsoil?	☐	☐	☒	☐
3) Be located on a geologic unit or soil that is unstable, or that would become unstable as a result of the project, and potentially result in on- or off-site landslide, lateral spreading, subsidence, liquefaction, or collapse?	☐	☐	☒	☐
4) Be located on expansive soil, as defined in the current California Building Code, creating substantial direct or indirect risks to life or property?	☐	☐	☒	☐
5) Have soils incapable of adequately supporting the use of septic tanks or alternative wastewater disposal systems where sewers are not available for the disposal of wastewater?	☐	☐	☐	☒
6) Directly or indirectly destroy a unique paleontological resource or site or unique geological feature?	☐	☒	☐	☐

Impact GEO-1:	The project would not directly or indirectly cause potential substantial adverse effects, including the risk of loss, injury, or death involving rupture of a known earthquake fault, as delineated on the most recent Alquist-Priolo Earthquake Fault Zoning Map issued by the State Geologist for the area or based on other substantial evidence of a known fault; strong seismic ground shaking; seismic-related ground failure, including liquefaction; or landslides. **(Less than Significant Impact)**

Fault Rupture

The project site is not located within an Alquist-Priolo Earthquake Fault Zone; accordingly, the probability of fault rupture at the site is low. Therefore, the risk of a known earthquake fault rupture causing substantial adverse effects, including loss, injury, or death as a result of the project would be less than significant.

Seismic Ground Shaking

The project site is located within the seismically active San Francisco Bay Area. The faults in this region are capable of generating earthquakes of magnitude 7.0 or higher. During an earthquake, very strong ground shaking could occur at the project site. The proposed bridge would be constructed in compliance with the Caltrans Seismic Design Criteria, American Association of State Highway and Transportation Officials (AASHTO) Bridge Design Specifications, the soil investigation requirements of the City of Milpitas Municipal Code and Seismic Hazards Mapping Act, and applicable General Plan policies (Policies SA 1-1 through 1.7). The bridge abutments supporting the bridge span would be constructed to resist lateral pressures from the ground and from vehicles above. Additionally, back drains would be installed behind the bridge abutments to relieve hydrostatic pressure pushing against the abutments. Consistent with General Plan Policy SA 1-3, the project has completed a geotechnical investigation to ensure the project is constructed to mitigate seismic hazards. Adherence to the Caltrans Seismic Design Criteria, AASHTO Bridge Design Specifications, City's General Plan and Municipal Code, and the recommendations of a design-level geotechnical report would ensure that the proposed structures would not result in seismic hazards. As such, the existing seismic hazards on the project site would not be exacerbated, and therefore the risk of seismic ground shaking causing substantial adverse effects, including loss, injury, or death as a result of the project would be less than significant.

Liquefaction and Lateral Spreading

As discussed under Section 4.7.1.2, the proposed project site is located within a Liquefaction Hazard Zone, however the geotechnical investigation determined that there is low risk of liquefaction due to the stiff to very stiff cohesive soil material present. The proposed bridge foundations would be built above and outside of the creek's upper banks and would not interfere with the stream channel and existing floodway design.

The steep slopes on either side of the East Penitencia Channel are potentially at risk of lateral spreading, should liquefaction of soils located upslope occur. However, as previously noted, soils within the project site are stiff to very stiff, and therefore not at risk of liquefaction. Accordingly, the likelihood of lateral spreading occurring on either side of the East Penitencia Channel is low.

Furthermore, adherence to the Caltrans Seismic Design Criteria, AASHTO Bridge Design Specifications, City's General Plan and Municipal Code, and the recommendations of the geotechnical investigation would ensure that the risk of liquefaction and associated lateral spreading causing substantial adverse effects, including loss, injury, or death as a result of the project would be less than significant.

Landslides

The project is not located in a Landslide Hazard Zone.[54] The project would not change the topography of the site and surrounding area such that the likelihood of landslides occurring would increase. Accordingly, the risk of landslides causing substantial adverse effects, including loss, injury, or death as a result of the project would be less than significant.

Impact GEO-2:	The project would not result in substantial soil erosion or the loss of topsoil. **(Less than Significant Impact)**

Construction activities (e.g., grading and excavation) could temporarily increase sedimentation and erosion by exposing on-site soils to wind and runoff. The project would be required to comply with General Plan Policy SA 1-5, which requires preparation of an erosion and sediment control plan. The report must address site soil conditions, including measures to effectively minimize soil erosion and sedimentation. Additionally, the project would be required to comply with General Plan Policies UCS 4-2, UCS 4-4, AND UCS-4.14, which would require the project to comply with the NPDES Construction General Permit requirements, including preparation of a Storm Water Pollution Prevention Plan (SWPPP) and implementation of best management practices to minimize pollutant discharge during construction. By implementing standard grading and best management practices as required by Title II, Chapter 13 of the Milpitas Municipal Code and the recommendations of the erosion and sediment control plan, erosion and sedimentation impacts would be less than significant.

Impact GEO-3:	The project would not be located on a geologic unit or soil that is unstable, or that would become unstable as a result of the project, and potentially result in on- or off-site landslide, lateral spreading, subsidence, liquefaction, or collapse. **(Less than Significant Impact)**

As discussed under Section 4.7.1.2 and Impact GEO-1, the project site is located within a state-designated Liquefaction Hazard Zone; however, there is low risk of liquefaction due to the stiff to very still cohesive soil material present. By conforming with applicable regulations and the recommendations of a design-level geotechnical report, the project would not result in on- or off-site landslide, lateral spreading, subsidence, liquefaction, or collapse and would have a less than significant impact.

[54] California Geological Survey. *Earthquake Zones of Required Investigation*. Accessed January 10, 2024. https://maps.conservation.ca.gov/cgs/eqzapp/app/

Impact GEO-4:	The project would not be located on expansive soil, as defined in the current California Building Code, creating substantial direct or indirect risks to life or property. **(Less than Significant Impact)**

Pursuant to the CBC, soils with a plasticity index (PI) of 15 or less are not considered expansive. As documented in Section 4.7.1.2 Existing Conditions, soils on-site have a PI in excess of 15 and are moderately to highly expansive. Although expansive soils can be a hazard, it is generally mitigated through adherence with standard engineering and building practices as well as the applicable elements of City building and fire codes. As discussed in Impact GEO-1, the project would be constructed in conformance with the Caltrans Seismic Design Criteria, AASHTO Bridge Design Specifications, City's General Plan and Municipal Code, and the recommendations of a design-level geotechnical report, which would reduce impacts related to expansive soils to less than significant.

Impact GEO-5:	The project would not have soils incapable of adequately supporting the use of septic tanks or alternative wastewater disposal systems where sewers are not available for the disposal of wastewater. **(No Impact)**

The project site is located within an urbanized area of Milpitas where sewers are available to dispose wastewater. The proposed bridge and roadway connections would not require the use of septic tanks or alternative wastewater disposal systems.

Impact GEO-6:	The project would not directly or indirectly destroy a unique paleontological resource or site or unique geological feature. **(Less than Significant Impact with Mitigation Incorporated)**

There are no known paleontological resources and no unique geologic features on the project site. However, construction of the project would require excavations up to 60 feet bgs for each of the bridge piers. Additionally, the project site is underlain by younger Holocene-era alluvial fan deposits where the potential to discover vertebrate fossils exists. Therefore, construction-related ground disturbing activities could significantly impact unknown subsurface paleontological resources, if encountered.

Mitigation Measure: Implementation of the following mitigation would ensure impacts to paleontological resources or geologic features are less than significant:

MM GEO-6.1: A qualified paleontologist shall attend a preconstruction meeting to ensure construction workers are able to identify potential paleontological resources. In the event fossils are encountered, construction shall be temporarily halted. The City's Engineering Department shall be notified immediately, a qualified paleontologist shall evaluate the fossils, and steps needed to photo document and recover the fossils shall be taken.

With implementation of MM GEO-6.1, the project would identify and preserve any undiscovered paleontological resources encountered during construction and ensure that impacts to paleontological resources would be less than significant.

4.8 GREENHOUSE GAS EMISSIONS

The following discussion is based, in part, on an Air Quality and Greenhouse Gas Assessment and an Update to the Air Quality Impact Analysis Memo prepared for the project by Illingworth & Rodkin, Inc. The reports, dated November 10, 2021 and November 20, 2023, are attached to this Initial Study as Appendix A.

4.8.1 Environmental Setting

4.8.1.1 *Background Information*

Gases that trap heat in the atmosphere, GHGs, regulate the earth's temperature. This phenomenon, known as the greenhouse effect, is responsible for maintaining a habitable climate. In GHG emission inventories, the weight of each gas is multiplied by its global warming potential (GWP) and is measured in units of CO_2 equivalents (CO_2e). The most common GHGs are carbon dioxide (CO_2) and water vapor but there are also several others, most importantly methane (CH_4), nitrous oxide (N_2O), hydrofluorocarbons (HFCs), perfluorocarbons (PFCs), and sulfur hexafluoride (SF_6). These are released into the earth's atmosphere through a variety of natural processes and human activities. Sources of GHGs are generally as follows:

- CO_2 and N_2O are byproducts of fossil fuel combustion.
- N_2O is associated with agricultural operations such as fertilization of crops.
- CH_4 is commonly created by off-gassing from agricultural practices (e.g., keeping livestock) and landfill operations.
- Chlorofluorocarbons (CFCs) were widely used as refrigerants, propellants, and cleaning solvents, but their production has been stopped by international treaty.
- HFCs are now used as a substitute for CFCs in refrigeration and cooling.
- PFCs and SF_6 emissions are commonly created by industries such as aluminum production and semiconductor manufacturing.

An expanding body of scientific research supports the theory that global climate change is currently causing changes in weather patterns, average sea level, ocean acidification, chemical reaction rates, and precipitation rates, and that it will increasingly do so in the future. The climate and several naturally occurring resources within California are adversely affected by the global warming trend. Increased precipitation and sea level rise will increase coastal flooding, saltwater intrusion, and degradation of wetlands. Mass migration and/or loss of plant and animal species could also occur. Potential effects of global climate change that could adversely affect human health include more extreme heat waves and heat-related stress; an increase in climate-sensitive diseases; more frequent and intense natural disasters such as flooding, hurricanes and drought; and increased levels of air pollution.

4.8.1.2 *Regulatory Framework*

Federal

Clean Air Act

The EPA is the federal agency responsible for implementing the Clean Air Act. The U.S. Supreme Court in its 2007 decision in Massachusetts et al. v. Environmental Protection Agency et al., ruled that CO2 is an air pollutant as defined under the Clean Air Act, and that EPA has the authority to regulate emissions of GHGs. Following the court decision, EPA has taken actions to regulate, monitor, and potentially reduce GHG emissions (primarily mobile emissions).

State

Assembly Bill 32

Under the California Global Warming Solutions Act, also known as Assembly Bill (AB) 32, CARB established a statewide GHG emissions cap for 2020, adopted mandatory reporting rules for significant sources of GHGs, and adopted a comprehensive plan, known as the Climate Change Scoping Plan, identifying how emission reductions would be achieved from significant GHG sources.

In 2016, Senate Bill (SB) 32 was signed into law, amending the California Global Warming Solution Act. SB 32, and accompanying Executive Order B-30-15, require CARB to ensure that statewide GHG emissions are reduced to 40 percent below the 1990 level by 2030. CARB updated its Climate Change Scoping Plan in December of 2017 to express the 2030 statewide target in terms of million metric tons of CO_2e ($MMTCO_2e$). Based on the emissions reductions directed by SB 32, the annual 2030 statewide target emissions level for California is 260 $MMTCO_2e$.

Senate Bill 375

SB 375, known as the Sustainable Communities Strategy and Climate Protection Act, was signed into law in September 2008. SB 375 builds upon AB 32 by requiring CARB to develop regional GHG reduction targets for automobile and light truck sectors for 2020 and 2035. The per capita GHG emissions reduction targets for passenger vehicles in the San Francisco Bay Area include a seven percent reduction by 2020 and a 15 percent reduction by 2035.

Consistent with the requirements of SB 375, the Metropolitan Transportation Commission (MTC) partnered with the Association of Bay Area Governments (ABAG), BAAQMD, and the Bay Conservation and Development Commission to prepare the region's Sustainable Communities Strategy (SCS) as part of the Regional Transportation Plan process. The SCS is referred to as Plan Bay Area 2040. Plan Bay Area 2040 establishes a course for reducing per capita GHG emissions through the promotion of compact, high-density, mixed-use neighborhoods near transit, particularly within identified Priority Development Areas (PDAs).

Regional

2017 Clean Air Plan

To protect the climate, the 2017 CAP (prepared by BAAQMD) includes control measures designed to reduce emissions of methane and other super-GHGs that are potent climate pollutants in the near-term, and to decrease emissions of carbon dioxide by reducing fossil fuel combustion.

BAAQMD CEQA Air Quality Guidelines

In April 2022, the BAAQMD Board of Directors adopted the Justification Report: CEQA Thresholds for Evaluating the Significance of Climate Impacts from Land Use Projects and Plans. The report includes BAAQMD's thresholds of significance for use in determining whether a proposed project or plan will have a significant impact on climate change and provides substantial evidence to support these thresholds. The April 2022 GHG thresholds replace the GHG thresholds set forth in the May 2017 BAAQMD CEQA Air Quality Guidelines and represent what is required of new land use development projects and plans to achieve California's long-term climate goal of carbon neutrality by 2045.

Local

City of Milpitas General Plan 2040

The following policies and actions in the City's General Plan have been adopted for the purpose of avoiding or mitigating greenhouse gas emission impacts resulting from planned development within the City, including the following:

Policies/Actions	Description
Policy CIR 1-3	Promote interconnectivity of the transportation network in existing and new developments and actively measure the quality of conditions in neighborhoods to better understand what barriers exist in order to support use of and access to the network.
Policy CIR 1-4	Coordinate development of safe, inclusive, and health-promoting transportation infrastructure with local, county, regional, and state agencies to optimize efficiency of the transportation network for all users and increase opportunities for physical activity for all types of users.
Policy CIR 6-2	Support development of healthier communities through the use of lower- or non-polluting modes of transportation to reduce GHG vehicle emissions and local air pollution levels.
Action CIR-1j	Seek opportunities to eliminate close walking and bicycling network gaps across barriers to mobility, including I-680, I-880, SR 237, and the Union Pacific and BART tracks.
Action CIR-4q	Make improvements to roads, signs, and traffic signals as needed to improve accessible, safe, and convenient bicycle and pedestrian travel.

Policies/Actions	Description
Policy CON 7-1	Ensure that land use and transportation plans support air quality goals through a logical development pattern that focuses growth in and around existing urbanized areas, locates new housing near places of employment, encourages alternative modes of transportation, supports efficient parking strategies, reduces vehicle miles traveled, and requires projects to mitigate significant air quality impacts.
Policy CON 7-4	Require projects to adhere to the requirements of the Bay Area Air Quality Management District (BAAQMD).
Policy CON 7-5	Use the City's development review process and the California Environmental Quality Act (CEQA) to evaluate and mitigate the local and cumulative effects of new development on air quality.
Policy CON 7-7	Comply with regional, state, and federal standards and programs for control of all airborne pollutants and noxious odors, regardless of source.
Policy CON 7-11	Encourage improvements and design features that reduce vehicle delay such as bus turnouts, and synchronized traffic signals for new development to reduce excessive vehicle emissions caused by idling.
Policy CON 7-12	Encourage and prioritize infrastructure investments and improvements that promote safe walking, bicycling and increased transit ridership.
Action CON-7f	Use the BAAQMD "Air Quality Guidelines", as amended, or replaced, in identifying thresholds, evaluating the potential project and cumulative impacts, and determining appropriate mitigation measures. Review development, infrastructure, and planning projects for consistency with BAAQMD requirements during the CEQA review process. Require project applicants to prepare air quality analyses to address BAAQMD, and General Plan requirements, which includes analysis and identification of: • Air pollutant emissions associated with the project during construction, project operation, and cumulative conditions; • Potential exposure of sensitive receptors to toxic air contaminants; • Significant air quality impacts associated with the project for construction, project operation, and cumulative conditions; and • Mitigation measures to reduce significant impacts to less than significant or the maximum extent feasible where impacts cannot be mitigated to less than significant.

City of Milpitas Climate Action Plan

The City of Milpitas' Climate Action Plan (CAP) Update was adopted in 2022. It is designed to streamline environmental review of future development projects in the City of Milpitas consistent with the CEQA Guidelines Section 15183.5(b) and the BAAQMD Air Quality Guidelines. The CAP identifies a strategy, reduction measures, and implementation strategies to comply with AB 32 and SB 375. The CAP establishes a local GHG reduction target of 36 percent below 2019 levels by 2030; 79 percent below 2019 levels by 2040; and carbon neutrality by 2045. The city's 2030 target requires GHG emissions to be reduced to 283,817 $MTCO_2e$ in 2030. The 2040 target, which the City has set based upon the trajectory necessary to meet the 2045 goal, requires community emissions to be

reduced to 94,606 $MTCO_2e$ in 2040. The 2040 goal is intended to align with the General Plan 2040 horizon year. To that end, the CAP includes the following policies which are intended to conserve energy and promote alternative modes of transportation:

Measures	Description
TR-1.1	Reduce VMT from new development in compliance with SB 743.
TR-3.2	Increase transit ridership.

City of Milpitas Metro Specific Plan

The MMSP adopted the following policies for the purpose of avoiding or mitigating greenhouse gas emissions impacts resulting from planned development within the MMSP area, including the following:

Policies	Description
M 8	Establish and implement a travel demand management (TDM) program with the non-compulsory goal of reducing VMT by 15 percent or more below the regional baseline per employee or resident and efficiently provides parking that meet the needs of residents, employees, and visitors. TDM measures should be incorporated into all new development and may be implemented by individual uses or through Transportation Management Association (TMA) oversight.
M 8.1	The TMA is responsible for monitoring trip reduction, VMT targets, and services within the planning area. Participation in the TMA is required of all new development and optional for existing uses.
M 5.1	Create a complete pedestrian and bicycle network that connects trails and pathways and includes continuous sidewalks and safe bike travel routes throughout the entire Milpitas Metro Area.

4.8.1.3 *Existing Conditions*

Unlike emissions of criteria and toxic air pollutants, which have regional and local impacts, emissions of GHGs have a broader, global impact. Global warming is a process whereby GHGs accumulating in the upper atmosphere contribute to an increase in the temperature of the earth and changes in the weather patterns.

The project site is currently developed with an approximately 41,307 square foot vacant office building and associated surface parking lot. The existing development generates GHGs through building heating and cooling, electricity use, solid waste disposal, and vehicle travel to and from the site, including freight deliveries.

4.8.2 Impact Discussion

	Potentially Significant Impact	Less than Significant with Mitigation Incorporated	Less than Significant Impact	No Impact
Would the project:				
1) Generate greenhouse gas (GHG) emissions, either directly or indirectly, that may have a significant impact on the environment?	☐	☐	☒	☐
2) Conflict with an applicable plan, policy, or regulation adopted for the purpose of reducing the emissions of GHGs?	☐	☐	☐	☒

4.8.2.1 *Thresholds of Significance*

Pursuant with BAAQMD, for land use projects to result in a less than significant GHG emissions impact, the land use project would need to comply with threshold A or B below.

A. Projects must include, at a minimum, the following project design elements:
   1. Buildings
      a. The project will not include natural gas appliances or natural gas plumbing (in both residential and nonresidential development).
      b. The project will not result in any wasteful, inefficient, or unnecessary energy usage as determined by the analysis required under CEQA Section 21100(b)(3) and Section 15126.2(b) of the State CEQA Guidelines.
   2. Transportation
      c. Achieve a reduction in project-generated vehicle miles traveled (VMT) below the regional average consistent with the current version of the California Climate Change Scoping Plan (currently 15 percent) or meet a locally adopted Senate Bill 743 VMT target, reflecting the recommendations provided in the Governor's Office of Planning and Research's Technical Advisory on Evaluating Transportation Impacts in CEQA:
         i. Residential projects: 15 percent below the existing VMT per capita
         ii. Office projects: 15 percent below the existing VMT per employee
         iii. Retail projects: no net increase in existing VMT
         iv. Achieve compliance with off-street electric vehicle requirements in the most recently adopted version of CALGreen Tier 2.
B. Be consistent with a local GHG reduction strategy that meets the criteria under State CEQA Guidelines Section 15183.5(b)

At the time the Air Quality and GH Assessment was prepared, the City did not have a qualified CAP and BAAQMD was still using quantified emissions thresholds. Therefore, the Air Quality and GHG Assessment uses a bright-line threshold of 660 MT CO_{2e}/year based on the GHG reduction goals of EO B-30-15. The 2030 bright-line threshold of 660 MT CO_{2e}/year is a 40 percent reduction of the 2020 1,100 MT CO_{2e}/year threshold, which coincides with the 40 percent reduction in 1990 GHG emissions by 2030 per SB 32.

Impact GHG-1:	The project would not generate GHG emissions, either directly or indirectly, that may have a significant impact on the environment. **(Less than Significant Impact)**

Construction Emissions

Short-term GHG emissions from the construction phase of the project would consist primarily of heavy equipment exhaust, worker travel, materials delivery, and solid waste disposal. Neither the City of Milpitas nor BAAQMD have an adopted threshold of significance for construction-related GHG emissions; however, BAAQMD recommends disclosing that GHG emissions would occur during construction. BAAQMD also encourages the incorporation of best management practices to reduce GHG emissions during construction where feasible and applicable. Because construction would be temporary (approximately 18 months) and would not result in a permanent increase in emissions, the project would not interfere with the implementation of AB 32 or SB 32.

Operational Emissions

The project would generate GHG emissions in the form of vehicle exhaust associated with project-generated traffic. GHG emissions generated by the project were estimated using a combination of RCEM and CalEEMod in accordance with the guidance provided in the BAAQMD CEQA Air Quality Guidelines. The GHG emissions associated with the existing office development were estimated using CalEEMod and subtracted from GHG emissions associated with the project to calculate the net increase in GHG emissions. The modeling assumptions and methodology, data inputs, and results are described further in Appendix **A** of this Initial Study. Table 4.8-1 below shows the annual GHG emissions resulting from operation of the proposed project.

Table 4.8-1: Calculated GHG Emissions of Existing Development and Proposed Project

Source Category	Existing Use	Proposed Project
Area	0.0	N/A
Energy Consumption	106.8	N/A
Mobile	227.5	10.3
Solid Waste Generation	19.3	N/A
Water Usage	9.7	N/A
Total GHG Emissions (MT CO_{2e}/yr)	363.3	10.3
Net GHG Emissions (MTCO_{2e}/yr)	-353.1	
Bright-Line Significance Threshold	*660 MT CO_{2e}/yr.*	
Exceed Threshold?	No	

Source: Illingworth & Rodkin, Inc. *S. Milpitas Boulevard Vehicular Bridge Air Quality Assessment*. November 10, 2021.

As shown in Table 4.8-1, the proposed project would result in a net reduction in GHG emissions of 353.1 MT CO_{2e} per year, which would not exceed the bright-line threshold of 660 MT CO_{2e}/yr.

Therefore, the project would not generate GHG emissions, either directly or indirectly, that may have a significant impact on the environment.

In addition, the City's Climate Action Plan Update is a qualified GHG reduction strategy that is designed to meet statewide GHG reduction targets for 2030 set by SB 32. Projects that comply with the policies and strategies outlined in the City's CAP would have less than significant GHG impacts under CEQA. The proposed bridge and roadway connection would improve bicycle and pedestrian connectivity and would reduce VMT (refer to the discussion under Section 4.17 Transportation under Impact TRN-2). For these reasons, the project would be consistent with the City's CAP and would result in less than significant GHG impacts.

Impact GHG-2:	The project would not conflict with an applicable plan, policy, or regulation adopted for the purpose of reducing the emissions of GHGs. **(No Impact)**

As discussed under Impact GHG-1, the project would result in a net reduction in GHG emissions in comparison with the existing development. Accordingly, the project would not generate GHG emissions, either directly or indirectly, that may have a significant impact on the environment, and would not conflict with AB 32, SB 32, the BAAQMD CEQA Air Quality Guidelines, or the 2022 City of Milpitas Climate Action Plan Update.

4.9 HAZARDS AND HAZARDOUS MATERIALS

4.9.1 Environmental Setting

4.9.1.1 *Regulatory Framework*

Overview

The storage, use, generation, transport, and disposal of hazardous materials and waste are highly regulated under federal and state laws. In California, the EPA has granted most enforcement authority over federal hazardous materials regulations to the California Environmental Protection Agency (CalEPA). In turn, local agencies have been granted responsibility for implementation and enforcement of many hazardous materials regulations under the Certified Unified Program Agency (CUPA) program.

Worker health and safety and public safety are key issues when dealing with hazardous materials. Proper handling and disposal of hazardous material is vital if it is disturbed during project construction. Cal/OSHA enforces state worker health and safety regulations related to construction activities. Regulations include exposure limits, requirements for protective clothing, and training requirements to prevent exposure to hazardous materials. Cal/OSHA also enforces occupational health and safety regulations specific to lead and asbestos investigations and abatement.

Federal and State

Federal Aviation Regulations Part 77

Federal Aviation Regulations, Part 77 Objects Affecting Navigable Airspace (FAR Part 77) sets forth standards and review requirements for protecting the airspace for safe aircraft operation, particularly by restricting the height of potential structures and minimizing other potential hazards (such as reflective surfaces, flashing lights, and electronic interference) to aircraft in flight. These regulations require that the Federal Aviation Administration (FAA) be notified of certain proposed construction projects located within an extended zone defined by an imaginary slope radiating outward for several miles from an airport's runways, or which would otherwise stand at least 200 feet in height above the ground.

Comprehensive Environmental Response, Compensation, and Liability Act

The Comprehensive Environmental Response, Compensation, and Liability Act (CERCLA), commonly known as Superfund, was enacted by Congress on December 11, 1980. This law created a tax on the chemical and petroleum industries and provided broad federal authority to respond directly to releases or threatened releases of hazardous substances that may endanger public health or the environment. Over five years, $1.6 billion was collected and the tax went to a trust fund for cleaning up abandoned or uncontrolled hazardous waste sites. CERCLA accomplished the following objectives:

- Established prohibitions and requirements concerning closed and abandoned hazardous waste sites;

- Provided for liability of persons responsible for releases of hazardous waste at these sites; and
- Established a trust fund to provide for cleanup when no responsible party could be identified.

The law authorizes two kinds of response actions:

- Short-term removals, where actions may be taken to address releases or threatened releases requiring prompt response; and
- Long-term remedial response actions that permanently and significantly reduce the dangers associated with releases or threats of releases of hazardous substances that are serious, but not immediately life-threatening. These actions can be completed only at sites listed on the EPA's National Priorities List.

CERCLA also enabled the revision of the National Contingency Plan (NCP). The NCP provided the guidelines and procedures needed to respond to releases and threatened releases of hazardous substances, pollutants, or contaminants. The NCP also established the National Priorities List. CERCLA was amended by the Superfund Amendments and Reauthorization Act on October 17, 1986.[55]

Resource Conservation and Recovery Act

The Resource Conservation and Recovery Act (RCRA), enacted in 1976, is the principal federal law in the United States governing the disposal of solid waste and hazardous waste. RCRA gives the EPA the authority to control hazardous waste from the "cradle to the grave." This includes the generation, transportation, treatment, storage, and disposal of hazardous waste. RCRA also sets forth a framework for the management of non-hazardous solid wastes.

The Federal Hazardous and Solid Waste Amendments (HSWA) are the 1984 amendments to RCRA that focused on waste minimization, phasing out land disposal of hazardous waste, and corrective action for releases. Some of the other mandates of this law include increased enforcement authority for the EPA, more stringent hazardous waste management standards, and a comprehensive underground storage tank program.[56]

Government Code Section 65962.5 (Cortese List)

Section 65962.5 of the Government Code requires CalEPA to develop and update a list of hazardous waste and substances sites, known as the Cortese List. The Cortese List is used by state and local agencies and developers to comply with CEQA requirements. The Cortese List includes hazardous substance release sites identified by the Department of Toxic Substances Control (DTSC) and State Water Resources Control Board (SWRCB).[57]

[55] United States Environmental Protection Agency. "Superfund: CERCLA Overview." Accessed January 9, 2024. https://www.epa.gov/superfund/superfund-cercla-overview.
[56] United States Environmental Protection Agency. "Summary of the Resource Conservation and Recovery Act." Accessed January 9, 2024. https://www.epa.gov/laws-regulations/summary-resource-conservation-and-recovery-act.
[57] California Environmental Protection Agency. "Cortese List Data Resources." Accessed January 9, 2024. https://calepa.ca.gov/sitecleanup/corteselist/.

Toxic Substances Control Act

The Toxic Substances Control Act (TSCA) of 1976 provides the EPA with authority to require reporting, record-keeping and testing requirements, and restrictions relating to chemical substances and/or mixtures. Certain substances are generally excluded from TSCA, including, among others, food, drugs, cosmetics, and pesticides. The TSCA addresses the production, importation, use, and disposal of specific chemicals including polychlorinated biphenyls (PCBs), asbestos, radon, and lead-based paint.

Asbestos-Containing Materials

Friable asbestos is any asbestos containing material (ACM) that, when dry, can easily be crumbled or pulverized to a powder by hand, allowing the asbestos particles to become airborne. Common examples of products that have been found to contain friable asbestos include acoustical ceilings, plaster, wallboard, and thermal insulation for water heaters and pipes. Common examples of non-friable ACMs are asphalt roofing shingles, vinyl floor tiles, and transite siding made with cement. The EPA phased out use of friable asbestos products between 1973 and 1978. National Emission Standards for Hazardous Air Pollutants guidelines require that potentially friable ACMs be removed prior to building demolition or remodeling that may disturb the ACMs.

Lead Based Paint

In 1978, the U.S. Consumer Product Safety Commission lowered the permissible levels of lead contained in paints and banned consumer uses of lead-based paint. Lead paint is still present in millions of buildings, sometimes under layers of newer paint. If the paint is in good shape, the lead paint is usually not a problem. Deteriorating lead-based paint (peeling, chipping, chalking, cracking, damaged, or damp) is a hazard and needs immediate attention. Exposure to lead can result in deleterious effects to adults, including cardiovascular effects, increased blood pressure and incidence of hypertension, decreased kidney function, and reproductive problems (in both men and women), as well as developmental issues in children.[58]

California Accidental Release Prevention Program

The California Accidental Release Prevention (CalARP) Program aims to prevent accidental releases of regulated hazardous materials that represent a potential hazard beyond the boundaries of a property. Facilities that are required to participate in the CalARP Program use or store specified quantities of toxic and flammable substances (hazardous materials) that can have off-site consequences if accidentally released. The Santa Clara County Department of Environmental Health reviews CalARP risk management plans as the CUPA.

Regional and Local

Municipal Regional Permit Provision C.12.f

Polychlorinated biphenyls (PCBs) were produced in the United States between 1955 and 1978 and used in hundreds of industrial and commercial applications, including building and structure

[58] United States Environmental Protection Agency. “Learn about Lead”. Accessed January 9, 2024. https://www.epa.gov/lead/learn-about-lead.

materials such as plasticizers, paints, sealants, caulk, and wood floor finishes. In 1979, the EPA banned the production and use of PCBs due to their potential harmful health effects and persistence in the environment. PCBs can still be released to the environment today during demolition of buildings that contain legacy caulks, sealants, or other PCB-containing materials.

With the adoption of the San Francisco Bay Region Municipal Regional Stormwater National Pollutant Discharge Elimination System (NPDES) Permit (MRP) by the San Francisco Bay Regional Water Quality Control Board on November 19, 2015, Provision C.12.f requires that permittees develop an assessment methodology for applicable structures planned for demolition to ensure PCBs do not enter municipal storm drain systems.[59] Municipalities throughout the Bay Area are currently modifying demolition permit processes and implementing PCB screening protocols to comply with Provision C.12.f. Buildings constructed between 1950 and 1980 that are proposed for demolition must be screened for the presence of PCBs prior to the issuance of a demolition permit. Single family homes and wood-frame structures are exempt from these requirements.

City of Milpitas General Plan 2040

The following policies in the City's General Plan have been adopted for the purpose of reducing or avoiding impacts related to hazards and hazardous materials and are applicable to the project.

Policies	Description
Policy SA 5.1	Require hazardous waste generated within Milpitas to be disposed of in a safe manner, consistent with all applicable local, state, and federal laws.
Policy SA 5.2	Hazardous materials shall be stored in a safe manner, consistent with all applicable local, state, and federal laws.
Policy SA 5.4	Use the environmental review process to comment on Hazardous Waste Transportation, Storage and Disposal (TSD) Facilities proposed in the Milpitas Planning Area and throughout the County to request a risk assessment and ensure that potentially significant, widespread, and long-term impacts on public health and safety of these facilities are identified and mitigated, as such impacts do not respect jurisdictional boundaries.
Policy SA 5.5	As feasible, minimize the use of toxic cleaning supplies and products in civic facilities, and minimize the City's use of pesticides, herbicides and fertilizers during landscaping and outdoor municipal operations.

4.9.1.2 *Existing Conditions*

Site History

Historically, the project site was located in an undeveloped portion of Rancho Milpitas and was surrounded by farms of cultivated crops and orchards.[60] Farms ranged in size from approximately 40 to 250 acres and included a rural residence. The project site remained undeveloped until it was used for agricultural production as row crops between 1931 and 1968. Based on historic aerials of the

[59] California Regional Water Quality Control Board. *San Francisco Bay Region Municipal Regional Stormwater NPDES Permit.* November 2015.
[60] PaleoWest, LLC. *Archaeological Resources Assessment*. July 28, 2021.

project site, the existing office development on-site was constructed by 1980, when the areas to the north and south of Penitencia East Channel were developed with light industrial commercial buildings.

On-Site Sources of Contamination

The project site is on a list of hazardous material sites compiled pursuant to Government Code Section 65962.5 (Cortese List). According to GeoTracker, the parcel at 1831-1841 Tarob Court, Milpitas, CA 95035 has been identified as an Open Cleanup Site as a result of soil and groundwater contamination from past activities associated with circuit board manufacturing from 1979 to 2015.[61] These activities included the use of a clarifier that is the probable source of the primary volatile organic compounds (VOC) release, trichloroethylene (TCE) and dichloroethane (DCE).

In 2019, approximately 75.0 cubic yards of contaminated soil was excavated at the project site along a storm drain line where secondary source TCE risk-based thresholds were exceeded. An additional 64.8 cubic yards were removed with an associated sump pump.[62] In 2020, a Risk Management Plan was established identifying contamination locations, soil and groundwater management requirements for future earthwork, and requirements for future development projects. A deed restriction was applied to the property to limit uses as a roadway or open-air park due to the presence of contaminated soil, soil vapors, and groundwater. The RWQCB concluded that with the completed remediation activities and limitation of future land uses, the subject parcel does not require further active remediation.[63] However, the parcel's status remains open.[64]

Off-Site Sources of Contamination

Based on soil vapor testing conducted between 2017 and 2020, the project site has not been contaminated by any hazardous materials (including those that can be attributed to off-site sources) beyond those described above under On-Site Sources of Contamination.[65]

Airport Hazards

The nearest airport is the Norman Y. Mineta San José International Airport, which is located approximately three miles southwest of the City of Milpitas. According to the Norman Y. Mineta San José International Airport Comprehensive Land Use Plan, the City of Milpitas is not located within an airport safety zone.

---

[61] California State Water Resources Control Board. "GeoTracker, 1841 Tarob Court." January 9, 2024. https://geotracker.waterboards.ca.gov/case_summary?global_id=T10000008880.
[62] Montgomery, Michael. Executive Officer, San Francisco Bay Regional Water Quality Control Board. Personal Communication. March 26, 2020.
[63] San Francisco Bay Regional Water Quality Control Board. *No Further Remedial Action Required – former Dynamic Circuits Sites, 1831 Tarob Court, Milpitas, Santa Clara County*. August 10, 2020.
[64] West, Kimberlee. Engineer, San Francisco Bay Regional Water Quality Control Board. Personal Communication. August 13, 2020.
[65] McCloskey Consultants. *Site Plan-Soil Vapor Sampling Results for 355 Sango Court including 1831 Tarob Court*. Attachment to Kimberlee West Personal Communication. August 18, 2020

Wildfire Hazards

The project site is not located in a designated Wildland Fire Hazard or Wildland/Urban Interface Hazard Area.[66]

4.9.2 Impact Discussion

	Potentially Significant Impact	Less than Significant with Mitigation Incorporated	Less than Significant Impact	No Impact
Would the project:				
1) Create a significant hazard to the public or the environment through the routine transport, use, or disposal of hazardous materials?	☐	☐	☒	☐
2) Create a significant hazard to the public or the environment through reasonably foreseeable upset and accident conditions involving the release of hazardous materials into the environment?	☐	☒	☐	☐
3) Emit hazardous emissions or handle hazardous or acutely hazardous materials, substances, or waste within one-quarter mile of an existing or proposed school?	☐	☒	☐	☐
4) Be located on a site which is included on a list of hazardous materials sites compiled pursuant to Government Code Section 65962.5 and, as a result, would it create a significant hazard to the public or the environment?	☐	☒	☐	☐
5) For a project located within an airport land use plan or, where such a plan has not been adopted, within two miles of a public airport or public use airport, result in a safety hazard or excessive noise for people residing or working in the project area?	☐	☐	☐	☒
6) Impair implementation of or physically interfere with an adopted emergency response plan or emergency evacuation plan?	☐	☐	☒	☐
7) Expose people or structures, either directly or indirectly, to a significant risk of loss, injury, or death involving wildland fires?	☐	☐	☐	☒

[66] CAL FIRE. *Fire Hazard Severity Zone Viewer*. Accessed January 9, 2024. https://egis.fire.ca.gov/FHSZ/

Impact HAZ-1:	The project would not create a significant hazard to the public or the environment through the routine transport, use, or disposal of hazardous materials. **(Less than Significant Impact)**

Construction of the project would involve the use of potentially hazardous materials, including vehicle fuels, oils, and fluids. All hazardous materials would be transported, contained, stored, used, and disposed of in accordance with manufacturers' instructions and would be handled in compliance with all applicable standards and regulations. Construction-related hazardous materials use would be temporary, and would not constitute routine transport, use, or disposal.

The proposed project would demolish the existing office building at 1831-1841 Tarob Court, Milpitas, CA 95035. According to the Milpitas Building & Safety E-Permit Center, the office building was constructed in 1980 and may include materials that contain PCBs. PCBs in building materials could be released and thereby exposed to stormwater runoff from the project site during rain events. To address this risk, the City must submit a PCB Screening Assessment Form to the San Francisco Bay Regional Water Quality Control Board.[67] The form is designed to ascertain whether or not the building targeted for demolition is subject to the PCB Screening Assessment. If the on-site building does contain PCBs that exceed threshold limits, the City must follow applicable federal and state laws, including complying with the reporting requirements of the EPA, RWQCB, and DTSC, and additional sampling and abatement of PCBs if determined necessary by the oversight agency. Adherence to this process would result in a less than significant impact related to PCBs.

Small quantities of maintenance chemicals and herbicides and pesticides used in landscaping would be used in operation of the proposed project. No hazardous materials would be stored on-site. These materials would be managed in accordance with existing laws and regulations that ensure that the routine transport, storage, use, and disposal of these materials would not result in a significant hazard to the public or environment. As a result, the project would have a less than significant impact.

Impact HAZ-2:	The project would not create a significant hazard to the public or the environment through reasonably foreseeable upset and accident conditions involving the release of hazardous materials into the environment. **(Less than Significant Impact with Mitigation Incorporated)**

Soil and Groundwater Contamination

As described in Section 4.9.1.2 Existing Conditions, the project site has been the subject of remediation activities due to soil and groundwater contamination (VOC, TCE, and DCE). A deed restriction was applied to the property to limit uses as a roadway or open-air park due the presence of contaminated soil, soil vapors, and groundwater. When soil disturbance occurs, these contaminants can become airborne and pose a health hazard to construction workers, nearby sensitive receptors, and the environment.

[67] City of Milpitas. *Polychlorinated Biphenyls (PCBs) Screening Assessment Application Package*. May 2019.

Mitigation Measures: Consistent with General Plan Action SA-5a, the following mitigation measure would be required to reduce risks to construction workers, nearby sensitive receptors, and the environment.

MM HAZ-2.1: Prior to demolition and grading, a Risk Management Plan (RMP) shall be prepared to protect the health and safety of construction workers and site users adjacent to construction activities. The RMP shall be implemented during all phases of construction and shall include engineering controls, monitoring, and security measures to prevent unauthorized entry to the construction site and to reduce hazards outside of the construction site. The RMP shall address the possibility of encountering subsurface hazards and include procedures to protect workers and the public. The RMP shall also include procedures for managing soils and groundwater removed from the site to ensure that any excavated soils and/or dewatered groundwater with contaminants are stored, managed, and disposed of in accordance with applicable regulations and permits. Protocols for the handling, transport, and disposal of both known and previously unidentified hazardous materials that may be encountered during project development shall be specified. If prescribed exposure levels are exceeded, personal protective equipment shall be required for workers in accordance with Occupational Safety and Health Administration (OSHA) regulations. Finally, the RMP shall also include procedures for the use, storage, disposal, of hazardous materials used during construction activities to prevent the accidental release of these materials into the environment during construction.

With implementation of mitigation measure MM HAZ-2.1 above, contaminated soils on-site would be properly identified, characterized, removed and disposed of prior to ground-disturbing activities, thus preventing exposure of construction workers, nearby sensitive receptors, and the environment to soil contaminants from construction of the project.

Asbestos-Containing Materials and Lead Based Paint

The project proposes to demolish the existing office building and associated surface parking lot located at 1831-1841 Tarob Court, Milpitas, CA 95035, which was constructed by 1980 and may contain ACMs and surfaces coated with lead based paint. Demolition of the existing office development could result in the release of ACMs and lead-based paint to the environment, if appropriate control measures are not implemented.

Mitigation Measures: Consistent with General Plan Action SA-5a, the following mitigation measure would be required to reduce risks to construction workers, nearby sensitive receptors, and the environment.

MM HAZ-2.2: To reduce the potential for construction workers and nearby sensitive receptor to be exposed to hazardous materials (asbestos containing materials [ACMs] and lead-based paint), the following measures shall be incorporated at all times during the construction of the project.

- In conformance with state and local laws, a visual inspection/pre-demolition survey, and possible sampling, shall be conducted prior to the demolition of on-site building(s) to determine the presence of asbestos-containing materials and/or lead-based paints.
- Prior to demolition, all building materials containing lead-based paint shall be removed in accordance with the California Division of Occupational Safety and Health Lead in Title 8, California Code of Regulations, Section 1532.1, including employee training, employee air monitoring, and dust control. Any debris or soil containing lead-based paint or coatings shall be disposed of at landfills that meet acceptance criteria for the type of lead being disposed.
- All potentially friable asbestos-containing materials shall be removed in accordance with National Emission Standards for Hazardous Air Pollutants guidelines prior to demolition or renovation activities that may disturb asbestos-containing materials. All demolition activities shall be undertaken in accordance with the California Division of Occupational Safety and Health standards contained in Title 8, California Code of Regulations, Section 1529, to protect workers from asbestos exposure.
- A registered asbestos abatement contractor shall be retained to remove and dispose of asbestos-containing materials identified in the asbestos survey performed for the site in accordance with the standards stated above.
- Materials containing more than one-percent asbestos are also subject to Bay Area Air Quality Management District regulations. Removal of materials containing more than one-percent asbestos shall be completed in accordance with Bay Area Air Quality Management District requirements and notifications.
- Based on California Division of Occupational Safety and Health rules and regulations, the following conditions are required to limit impacts to construction workers.
    - Prior to commencement of demolition activities, a building survey, including sampling and testing, shall be completed to identify and quantify building materials containing lead-based paint.
    - During demolition activities, all building materials containing lead-based paint shall be removed in accordance with the California Division of Occupational Safety and Health Lead in Construction Standard, Title 8, California Code of Regulations, Section 1532.1, including employee training, employee air monitoring and dust control.
    - Any debris or soil containing lead-based paint or coatings shall be disposed of at landfills that meet acceptance criteria for the type of waste being disposed.

Implementation of MM HAZ-2.2 would result in all ACMs and lead-based paint being properly identified and removed prior to demolition, thus preventing the exposure of these materials to construction workers, nearby sensitive receptors, and the environment. Impacts would be less than significant with mitigation incorporated.

Impact HAZ-3:	The project would not emit hazardous emissions or handle hazardous or acutely hazardous materials, substances, or waste within one-quarter mile of an existing or proposed school. **(Less than Significant Impact with Mitigation Incorporated)**

There is one existing school, Stratford Elementary School, within one-quarter mile of the project site. Hazardous materials used in construction and operation of the proposed project would be managed in accordance with existing laws and regulations that ensure these materials do not pose a significant hazard to the public or environment. Hazardous emissions related to airborne contaminated soil particulates would be reduced to less than significant levels through the mitigation measures outlined under Impact HAZ-2.

Impact HAZ-4:	The project would not be located on a site which is included on a list of hazardous materials sites compiled pursuant to Government Code Section 65962.5 and, as a result, create a significant hazard to the public or the environment. **(Less than Significant Impact with Mitigation Incorporated)**

As discussed above in Section 4.9.1.2 Existing Conditions, the project site is listed as an Open Cleanup Program Site on the Cortese List. A deed restriction was applied to the property to limit uses as a roadway or open-air park due the presence of contaminated soil, soil vapors, and groundwater. The RWQCB concluded that with the completed remediation activities and limitation of future land uses, the subject parcel does not require further active remediation.[68] As discussed under Impact HAZ-2, with implementation of MM HAZ-2.1, the contaminated soil on-site would not pose a substantial hazard to construction workers or nearby sensitive receptors. For these reasons, the project would not create a significant hazard to the public or environment.

Impact HAZ-5:	The project would not be located within an airport land use plan or, where such a plan has not been adopted, within two miles of a public airport or public use airport. The project would not result in a safety hazard or excessive noise for people residing or working in the project area. **(No Impact)**

The project site is located approximately three miles northeast of the Mineta San José International Airport and is not located within the Airport Influence Area as defined by the Comprehensive Land Use Plan.[69] Therefore, the project would not result in a safety hazard or excessive noise for people residing or working in the project area.

[68] San Francisco Bay Regional Water Quality Control Board. *No Further Remedial Action Required – former Dynamic Circuits Sites, 1831 Tarob Court, Milpitas, Santa Clara County*. August 10, 2020.
[69] Santa Clara County Airport Land Use Commission. *Comprehensive Land Use Plan Norman Y. Mineta San JOSE International Airport*. November 2016. Figure 8.

Impact HAZ-6:	The project would not impair implementation of or physically interfere with an adopted emergency response plan or emergency evacuation plan. **(Less than Significant Impact)**

Development of the proposed project would not physically interfere with an adopted emergency response or evacuation plan. The project would improve access across the Penitencia East Channel to and from the Milpitas BART Station/Milpitas Transit Station and surrounding neighborhoods. The project does not contain characteristics that would impair the performance of the 2021 City's Emergency Management Program Assessment and Implementation Plan. For these reasons, the proposed project would not impair implementation or physically interfere with emergency plans and would have a less than significant impact.

Impact HAZ-7:	The project would not expose people or structures, either directly or indirectly, to a significant risk of loss, injury, or death involving wildland fires. **(No Impact)**

As discussed under Section 4.9.1.2 Existing Conditions, the project site is not within a Wildland Fire Hazard or Wildland/Urban Interface Area; therefore, the project would not expose people or structures, either directly or indirectly, to an increased significant risk of loss, injury, or death involving wildland fires.

4.10 HYDROLOGY AND WATER QUALITY

The following discussion is based, in part, on an East Penitencia Creek Bridge Crossing Hydraulic Analysis prepared by Schaaf & Wheeler Consulting Civil Engineers on September 4, 2020. The report is included in this Initial Study as Appendix E.

4.10.1 Environmental Setting

4.10.1.1 *Regulatory Framework*

Federal and State

The federal Clean Water Act (CWA) and California's Porter-Cologne Water Quality Control Act are the primary laws related to water quality in California. The Clean Water Act (CWA), Section 303, establishes water quality standards and Total Maximum Daily Load (TMDL) programs. The 303(d) list is a list of impaired water bodies.

Regulations set forth by the EPA and the SWRCB have been developed to fulfill the requirements of this legislation. EPA regulations include the NPDES permit program, which controls sources that discharge pollutants into the waters of the U.S. (e.g., streams, lakes, bays, etc.). These regulations are implemented at the regional level by the RWQCBs. The project site is within the jurisdiction of the San Francisco Bay RWQCB.

National Flood Insurance Program

The Federal Emergency Management Agency (FEMA) established the National Flood Insurance Program (NFIP) to reduce impacts of flooding on private and public properties. The program provides subsidized flood insurance to communities that comply with FEMA regulations protecting development in floodplains. As part of the program, FEMA publishes Flood Insurance Rate Maps (FIRMs) that identify Special Flood Hazard Areas (SFHAs). An SFHA is an area that would be inundated by the one-percent annual chance flood, which is also referred to as the base flood or 100-year flood.

Statewide Construction General Permit

The SWRCB has implemented an NPDES General Construction Permit for the State of California (Construction General Permit). For projects disturbing one acre or more of soil, a Notice of Intent (NOI) must be filed with the RWQCB by the project sponsor, and a Storm Water Pollution Prevention Plan (SWPPP) must be prepared by a qualified professional prior to commencement of construction and filed with the RWQCB by the project sponsor. The Construction General Permit includes requirements for training, inspections, record keeping, and, for projects of certain risk levels, monitoring. The general purpose of the requirements is to minimize the discharge of pollutants and to protect beneficial uses and receiving waters from the adverse effects of construction-related storm water discharges.

Regional

San Francisco Bay Basin Plan

The San Francisco Bay RWQCB regulates water quality in accordance with the Water Quality Control Plan for the San Francisco Bay Basin (Basin Plan). The Basin Plan lists the beneficial uses that the San Francisco Bay RWQCB has identified for local aquifers, streams, marshes, rivers, and the San Francisco Bay, as well as the water quality objectives and criteria that must be met to protect these uses. The San Francisco Bay RWQCB implements the Basin Plan by issuing and enforcing waste discharge requirements, including permits for nonpoint sources such as the urban runoff discharged by a City's stormwater drainage system. The Basin Plan also describes watershed management programs and water quality attainment strategies.

Municipal Regional Permit Provision C.3

The San Francisco Bay RWQCB re-issued the Municipal Regional Stormwater NPDES Permit (MRP) in 2015 to regulate stormwater discharges from municipalities and local agencies (co-permittees) in Alameda, Contra Costa, San Mateo, and Santa Clara Counties, and the cities of Fairfield, Suisun City, and Vallejo.[70] Under Provision C.3 of the MRP, new and redevelopment projects that create or replace 10,000 square feet or more of impervious surface area are required to implement site design, source control, and Low Impact Development (LID)-based stormwater treatment controls to treat post-construction stormwater runoff. LID-based treatment controls are intended to maintain or restore the site's natural hydrologic functions, maximizing opportunities for infiltration and evapotranspiration, and using stormwater as a resource (e.g. rainwater harvesting for non-potable uses). The MRP also requires that stormwater treatment measures are properly installed, operated, and maintained.

In addition to water quality controls, the MRP requires new development and redevelopment projects that create or replace one acre or more of impervious surface to manage development-related increases in peak runoff flow, volume, and duration, where such hydromodification is likely to cause increased erosion, silt pollutant generation, or other impacts to local rivers, streams, and creeks. Projects may be deemed exempt from these requirements if they do not meet the minimized size threshold, drain into tidally influenced areas or directly into the Bay, or drain into hardened channels, or if they are infill projects in sub-watersheds or catchment areas that are greater than or equal to 65 percent impervious.

Municipal Regional Permit Provision C.12.f

Provision C.12.f of the MRP requires co-permittee agencies to implement a control program for PCBs that reduces PCB loads by a specified amount during the term of the permit, thereby making substantial progress toward achieving the urban runoff PCBs wasteload allocation in the Basin Plan by March 2030.[71] Programs must include focused implementation of PCB control measures, such as source control, treatment control, and pollution prevention strategies. Municipalities throughout the Bay Area are updating their demolition permit processes to incorporate the management of PCBs in

[70] MRP Number CAS612008
[71] San Francisco Bay Regional Water Quality Control Board. *Municipal Regional Stormwater Permit, Provision C.12.* November 19, 2015.

demolition building materials to ensure PCBs are not discharged to storm drains during demolition. Buildings constructed between 1955 and 1978 that are proposed for demolition must be screened for the presence of PCBs prior to the issuance of a demolition permit.

Water Resources Protection Ordinance and District Well Ordinance

Valley Water operates as the flood control agency for Santa Clara County. Their stewardship also includes creek restoration, pollution prevention efforts, and groundwater recharge. Permits for well construction and destruction work, most exploratory boring for groundwater exploration, and projects within Valley Water property or easements are required under Valley Water's Water Resources Protection Ordinance and District Well Ordinance.

2021Groundwater Management Plan

The 2021 Groundwater Management Plan (GWMP) describes the Valley Water's comprehensive groundwater management framework, including existing and potential actions to achieve basin sustainability goals and ensure continued sustainable groundwater management. The GWMP covers the Santa Clara and Llagas subbasins, which are located entirely in Santa Clara County. Valley Water manages a diverse water supply portfolio, with sources including groundwater, local surface water, imported water, and recycled water. About half of the county's water supply comes from local sources and the other half comes from imported sources. Imported water includes the District's State Water Project and Central Valley contract supplies and supplies delivered by the San Francisco Public Utilities Commission (SFPUC) to cities in northern Santa Clara County. Local sources include natural groundwater recharge and surface water supplies. A small portion of the county's water supply is recycled water.

Local groundwater resources make up the foundation of the county's water supply, but they need to be augmented by the District's comprehensive water supply management activities to reliably meet the county's needs. These include the managed recharge of imported and local surface water and in-lieu recharge through the provision of treated surface water, acquisition of supplemental water supplies, and water conservation and recycling.[72]

Construction Dewatering Waste Discharge Requirements

Each of the RWQCBs regulate construction dewatering discharges to storm drains or surface waters within its Region under the NPDES program and Waste Discharge Requirements.

Local

City of Milpitas General Plan 2040

The following policies in the City's General Plan have been adopted for the purpose of reducing or avoiding impacts related to hydrology and water quality and are applicable to the project.

[72] Santa Clara Valley Water District. *2021 Groundwater Management Plan for the Santa Clara and Llagas Subbasins*. November 2021.

Policies	Description
Policy SA 2-3	Require all development projects to demonstrate how storm water runoff will be detained or retained on-site, treated, and/or conveyed to the nearest drainage facility as part of the development review process. Project applicants shall demonstrate that project implementation would not result in increases in the peak flow runoff to adjacent lands or drainage facilities that would exceed the design capacity of the drainage facility or result in an increased potential for offsite flooding.
Policy SA 2-5	Unless otherwise mitigated, require new structures to be located outside of the 100- year floodplain. All new development within an identified Flood Hazard Area shall be built according to Federal Emergency Management Agency standards and comply with the provisions for flood hazard reduction criteria (Milpitas Municipal Code Section XI-15-5).
Policy UCS 1-2	Require development and long-term planning projects to be consistent with all applicable City infrastructure plans, including the Water Master Plan, Urban Water Management Plan (UWMP), the Sewer Master Plan, the Sewer System Management Plan, the Green Infrastructure Plan, and the Capital Improvement Program.
Policy UCS 1-3	Require all future development projects to analyze their infrastructure and service impacts and either demonstrate that the City's existing infrastructure, public services, and utilities can accommodate the increased demand for services, and that service levels for existing users will not be diminished or impaired, or make the necessary improvements to mitigate all potential impacts.
Policy UCS 4-2	Require all development projects to demonstrate how storm water runoff will be detained or retained on-site and/or conveyed to the nearest drainage facility as part of the development review process and as required by the San Francisco Bay Region Municipal Regional Stormwater National Pollutant Discharge Elimination System (NPDES) Permit.
Policy UCS 4-3	Require all future development projects to analyze their drainage and stormwater conveyance impacts and either demonstrate that the City's existing infrastructure can accommodate increased stormwater flows, or make the necessary improvements to mitigate all potential impact
Policy UCS 4-4	Applicable projects shall incorporate Best Management Practices (BMPs) and Low Impact Development measures (LID) to treat stormwater before discharge from the site. The facilities shall be sized to meet regulatory requirements.
Policy UCS 4-6	Applicable projects shall minimize directly connected impervious areas by limiting the overall coverage of paving and roofs, directing runoff from impervious areas to adjacent pervious areas, and selecting permeable pavements and surface treatments.
Policy UCS 4-14	Construction sites shall incorporate measures to control erosion, sedimentation, and the generation of runoff pollutants to the maximum extent practicable. The design, scope and location of grading and related activities shall be designed to cause minimum disturbance to terrain and natural features. (Title II, Chapter 13 of the Municipal Code).

Policies	Description
Policy UCS 4-15	Minimize the use of pesticides that may affect water quality.

City of Milpitas Stormwater Regulations

To comply with Provision C.3 of the MRP, projects are required to submit a Stormwater Management Plan (SWMP) with building plans, to be reviewed and approved by the City of Milpitas's Engineering Department. The SWMP must be prepared under the direction of and certified by a licensed and qualified professional, which includes civil engineers, architects, or landscape architects. Conditions of approval for development projects include the installation and maintenance of Best Management Practices (BMPs) for site design and stormwater treatment, which must be designed per approved numeric sizing criteria.

City of Milpitas Municipal Code

Chapter 15 of the City's Municipal Code includes regulations to minimize public and private losses due to flood hazard areas of the City being subject to inundation. Chapter 16 of the City's Municipal Code ensures consistency with federal and state law requirements related to stormwater and urban runoff pollution control.

City of Milpitas Metro Specific Plan

The MMSP adopted the following policies for the purpose of avoiding or mitigating hydrology and water quality impacts resulting from planned development within the MMSP area, including the following:

Policies	Description
ICS 1.2	Ensure that runoff in storm drains does not lower water quality within or outside of the Plan Area by implementing Best Management Practices (BMPs) in new developments within the Metro Area.
ICS 2.1	Minimize damage associated with flooding events and comply with regulations stipulated by FEMA and the National Flood Insurance Program.
ICS 2.2	New development within a FEMA-designated flood hazard zone must follow the City's construction standards for such areas, as currently laid out in Section XI-15 'Floodplain Management Regulations' of the Milpitas Municipal Code.

4.10.1.2 *Existing Conditions*

Hydrology and Drainage

The project site is located in the Lower Penitencia Creek-Frontal San Francisco Bay Estuaries watershed. This watershed is a 30.5-square mile area that drains Penitencia Creek, Berryessa Creek Arroyo De Los Coches, and Calera Creek from the City's eastern foothills to the valley floor. The project is located on the Penitencia East Channel, which originates as an open creek channel approximately 715 feet to the east. Valley Water owns and manages the project site's creek channel

for flood protection. Penitencia East Channel flows west and north where it joins Lower Penitencia Creek and then Coyote Creek which flows into the San Francisco Bay.
Stormwater runoff from the City is collected in a system of storm drains ranging from 3- to 96-inches in diameter that drain into the City's waterways and ultimately to the San Francisco Bay.

Water Quality

As discussed above under Hydrology and Drainage, surface runoff from the project site is collected by storm drains and discharged to Lower Penitencia Creek which joins Coyote Creek, where it later flows into the San Francisco Bay. The runoff often contains contaminants such as oil and grease, plant and animal debris (e.g., leaves, dust, and animal feces), pesticides, litter, and heavy metals. In sufficient concentrations, these pollutants can adversely affect the aquatic habitats to which they drain. Within Milpitas, Coyote Creek is the only water body listed on the Section 303(d) list of impaired water.[73]

Groundwater

The project site lies within the Santa Clara Groundwater Basin which extends from the southern edge of San Francisco Bay through the Coyote Valley.[74] According to the geotechnical report completed for the project(refer to Appendix C), groundwater was encountered in the test bores on-site at 11 feet bgs. Historical high groundwater was estimated between five and ten feet bgs, based on measurements published by the California Geological Survey in 2002. Groundwater levels can fluctuate for a variety of factors, including seasonal precipitation, extraction from wells, and recharge due to irrigation or other methods.

Flooding

According to the City's General Plan, areas prone to flooding include Calera Creek, Los Coches Creek, Lower Penitencia Creek, Berryessa Creek, Wrigley Creek, Ford Creek, and Coyote Creek. The project site is located in the 100-year floodplain. According to FEMA, the creek and a small portion of the southern embankment is designated as Zone A, with the remaining portion designated as Zone AO.[75] Zone A is defined as areas with a one percent annual chance of flooding where no base flood elevation has been measured. Zone AO is defined as river or stream flood hazard areas and areas with a one percent annual chance of shallow flooding each year, with an average depth of one to three feet.

Dam Failure

The City is located within the Anderson Dam, Coyote Dam, and Sandy Wool Lake Dam failure inundation hazard zones, which are the areas that may be flooded in the event of a complete dam

---

[73] California State Water Resources Control Board. 2*020-2022 California Integrated Report (Clean Water Act Section 303(d) List and 305(b) Report).* May 11, 2022. Accessed February 6, 2023. https://www.waterboards.ca.gov/water_issues/programs/water_quality_assessment/2020_2022_integrated_report.html.
[74] City of Milpitas. *Milpitas General Plan Final Environmental Impact Report*. January 2020. SCH 2020070348. Page 3.9-4.
[75] Federal Emergency Management Agency. *Flood Insurance Rate Map Santa Clara County, California. Map No. 06085C0067J*. February 19, 2014.

failure. According to the Milpitas General Plan FEIR, the project site is not located in a dam failure inundation area.[76]

Seiches and Tsunamis

A seiche is defined as a standing wave generated by rapid displacement of water within an enclosed body of water (such as a lake or the San Francisco Bay) due to an earthquake that triggers land movement within the water body or landslides into or beneath the water body. There are no large bodies of water within the vicinity of the project sites; therefore, the project sites are not subject to seiches.[77]

A tsunami is a large tidal wave caused by an underwater earthquake or volcanic eruption. Tsunamis affecting the Bay Area can result from offshore earthquakes within the Bay Area. The project site is not within a tsunami inundation area.[78]

4.10.2 Impact Discussion

	Potentially Significant Impact	Less than Significant with Mitigation Incorporated	Less than Significant Impact	No Impact
Would the project:				
1) Violate any water quality standards or waste discharge requirements or otherwise substantially degrade surface or ground water quality?	☐	☐	☒	☐
2) Substantially decrease groundwater supplies or interfere substantially with groundwater recharge such that the project may impede sustainable groundwater management of the basin?	☐	☐	☒	☐
3) Substantially alter the existing drainage pattern of the site or area, including through the alteration of the course of a stream or river or through the addition of impervious surfaces, in a manner which would:	☐	☐	☒	☐
- result in substantial erosion or siltation on- or off-site;	☐	☐	☒	☐
- substantially increase the rate or amount of surface runoff in a manner which would result in flooding on- or off-site;	☐	☐	☒	☐

[76] City of Milpitas. *Milpitas General Plan Final Environmental Impact Report*. January 2020. SCH 2020070348. Page 3.9-8.
[77] City of Milpitas. *Milpitas General Plan Final Environmental Impact Report*. January 2020. SCH 2020070348. Page 3.6-16.
[78] City of Milpitas. *Milpitas General Plan Final Environmental Impact Report*. January 2020. SCH 2020070348. Page 3.6-16.

	Potentially Significant Impact	Less than Significant with Mitigation Incorporated	Less than Significant Impact	No Impact
Would the project:				
- create or contribute runoff water which would exceed the capacity of existing or planned stormwater drainage systems or provide substantial additional sources of polluted runoff; or	☐	☐	☒	☐
- impede or redirect flood flows?	☐	☐	☒	☐
4) In flood hazard, tsunami, or seiche zones, risk release of pollutants due to project inundation?	☐	☐	☒	☐
5) Conflict with or obstruct implementation of a water quality control plan or sustainable groundwater management plan?	☐	☐	☒	☐

Impact HYD-1: The project would not violate any water quality standards or waste discharge requirements or otherwise substantially degrade surface or ground water quality. **(Less than Significant Impact)**

The water quality of streams, creeks, ponds, and other surface water bodies can be greatly affected by pollution carried in contaminated surface runoff. Pollutants from unidentified sources, known as non-point source pollutants, are washed from streets, construction sites, parking lots, and other exposed surfaces into storm drains. Urban stormwater runoff often contains contaminants such as oil and grease, plant and animal debris (e.g., leaves, dust, animal feces, etc.), pesticides, litter, and heavy metals. In sufficient concentration, these pollutants have been found to adversely affect the aquatic habitats to which they drain.

Construction

Construction activities (e.g., grading and excavation) on the site may result in temporary impacts to surface water quality. When disturbance to underlying soils occurs, the surface runoff that flows across the site may contain sediments that are ultimately discharged into the storm drainage system. The proposed project would be required to obtain a NPDES Construction General Permit. As such, a Notice of Intent must be submitted to the RWQCB and a SWPPP must be developed to establish methods for controlling discharge associated with construction activities.

In addition to the Construction General Permit, the project would be required to comply with General Plan Policies UCS 4-4, UCS 4-6, and UCS-4.14 , which would require the project to implement best management practices that minimizes pollutant discharge during construction. Compliance with the requirements of the Construction General Permit and standard grading and best management practices as required by Title II, Chapter 13 of the Milpitas Municipal Code would ensure that soil and construction byproducts do not substantially degrade surface or ground water quality. Therefore, construction of the project would have a less than significant impact on water quality.

Post-Construction

The project would replace more than 10,000 square feet of impervious surfaces at the project site; therefore, it would be subject to Provision C.3 of the MRP. Therefore, the project would be required to incorporate site design, source control and runoff treatment controls to reduce the rates, volumes and pollutant loads of runoff from the project. The project would install bioswale basins to treat stormwater associated with the roads behind the flow line of the gutter. In addition to the requirements of Provision C.3, the project would be required to comply with General Plan Policies UCS 4-2, UCS 4-3, UCS 4-4, and UCS 4-6 to further reduce and treat surface runoff in accordance with state and local standards, thus preventing substantial degradation of surface or ground water quality. Therefore, construction of the proposed project in accordance with the City's Municipal Code and General Plan policies would not result in significant construction-related water quality impacts.

Impact HYD-2:	The project would not substantially decrease groundwater supplies or interfere substantially with groundwater recharge such that the project may impede sustainable groundwater management of the basin. **(Less than Significant Impact)**

The project site is located in an urban area and is not within a designated groundwater recharge zone for the groundwater basin. The proposed project would demolish an existing office building in order to develop a new public right-of-way that includes the construction of a bridge over Penitencia East Channel and development of a new roadway on an existing impervious surface. The proposed bridge would be constructed completely outside the channel and overbank areas. The operation of the proposed bridge and roadway would not require the use of water and, therefore, not require the extraction of groundwater resources. Therefore, the project would have less than significant impact on groundwater resources.

Impact HYD-3:	The project would not substantially alter the existing drainage pattern of the site or area, including through the alteration of the course of a stream or river or through the addition of impervious surfaces, in a manner which would result in substantial erosion or siltation on- or off-site; substantially increase the rate or amount of surface runoff in a manner which would result in flooding on- or off-site; create or contribute runoff water which would exceed the capacity of existing or planned stormwater drainage systems or provide substantial additional sources of polluted runoff; or impede or redirect flood flows. **(Less than Significant Impact)**

Runoff from the project site currently flows overland and either drains directly into the creek or enters the storm drainage system untreated and unimpeded. The project proposes to demolish the existing office building and associated surface parking lot, and construct 7-foot wide bioswale basins on either side of the proposed roadways, which would decrease the amount of impervious surface by approximately 9 percent, thereby decreasing the amount of surface runoff. Because the project would result in reduced runoff volumes compared to the existing conditions, the project would not negatively impact the capacity of the existing storm drain system or cause off-site flooding.

The proposed bridge would be clear-span, meaning that no permanent structures or fill would be placed within the Penitencia East Channel; therefore, the bridge would not impede flood flows and would avoid impacts within the bank or channel. While ground-disturbing activities during project construction could release sediment into the channel, any erosion associated with construction of the project would be managed in accordance with the City's Municipal Code and General Plan Policies (refer to Impact GEO-2 and HYD-1).

As discussed above under Impact HYD-1, the project would be required to adhere to the requirements of Provision C.3 of the MRP, Construction General Permit, and General Plan Policies UCS 4-2, UCS 4-3, UCS 4-4 and UCS 4-14; therefore, the project would improve the quality of stormwater runoff leaving the site and entering the City's storm drainage system. Finally, the project would be required to manage erosion and sedimentation during construction in accordance with the City's Municipal Code and the Construction General Permit. For these reasons, the project would not substantially alter the drainage pattern of the site or area in a manner which would result in on or off-site erosion, flooding, or runoff impacts.

Impact HYD-4:	The project would not risk release of pollutants due to project inundation in flood hazard, tsunami, or seiche zones. **(Less than Significant Impact)**

The project site and surrounding areas are within a FEMA Special Flood Hazard Area Zone AO and Zone A.[79] A site-specific floodplain analysis (Appendix E) indicated base flood elevations in the vicinity of the project site range from 39.73 feet to 45 feet NAVD.[80]

The proposed project would increase the base flood elevation by a maximum of 0.34 feet, downstream of the proposed bridge. Penitencia East Channel meets the NFIP definition of a regulatory floodway, which is the channel of a river or other watercourse and the adjacent land areas that must be reserved in order to discharge the base flood without cumulatively increasing the water surface elevation more than a designated height. This designated height is one foot for most NFIP communities, including Milpitas. Accordingly, the proposed project would result in less than one-foot of cumulative impact in the floodplain. Further, the proposed bridge deck would be 2.29 feet above the 100-year water surface elevation, consistent with MMSP Policies ISC 2.1 and ICS 2.2, and therefore would not be at risk of inundation.

As discussed above in Section 4.10.1.2, the project site has low susceptibility to tsunami, seiches, and mudflow events. According to the Association of Bay Area Government's interactive tsunami mapping, areas near the bay are not considered susceptible to tsunami inundation. There are no inland water bodies in the project vicinity that are susceptible to seiches, thereby precluding the possibility of a seiche inundating the project site. The surrounding vicinity does not contain any steep slopes that would produce a mudflow.

Consistent with MMSP Policies ICS 2.1 and ICS 2.2 and for the reasons stated above, the project would not risk release of pollutants due to project inundation in flood hazard, tsunami, or seiche zones.

[79] Federal Emergency Management Agency. *Flood Insurance Rate Map Santa Clara County, California. Map No. 06085C0067J*. February 19, 2014.
[80] North American Vertical Datum of 1988.

Impact HYD-5:	The project would not conflict with or obstruct implementation of a water quality control plan or sustainable groundwater management plan. **(Less than Significant Impact)**

As stated under Impact HYD-2, the project site is located in an urban area and is not within a designated groundwater recharge zone for the groundwater basin. Thus, the project would not conflict with a sustainable groundwater management plan. The San Francisco Bay RWQCB implements the Basin Plan by issuing and enforcing waste discharge requirements, including permits for nonpoint sources such as the urban runoff discharged by a City's stormwater drainage system. As discussed above, the project would be required to comply with General Plan Policy UCS 4-2 and would implement Best Management Practices to ensure that construction water quality impacts are minimized during project construction. The project would comply with the NPDES Construction General Permit and the MRP to ensure compliance with all applicable water quality regulations. By adhering to these policies and regulations the proposed project would not prevent the RWQCB from attaining the water quality objectives set forth in the Basin Plan and would have a less than significant impact.

4.11 LAND USE AND PLANNING

4.11.1 Environmental Setting

4.11.1.1 *Regulatory Framework*

Regional

Plan Bay Area 2050

Plan Bay Area 2050 is a long-range transportation, land-use, and housing plan intended to support a growing economy, provide more housing and transportation choices, and reduce transportation-related pollution and GHG emissions in the Bay Area. Plan Bay Area 2040 promotes compact, mixed-use residential and commercial neighborhoods near transit, particularly within identified Priority Development Areas (PDAs). Plan Bay Area is coordinated and led by the Metropolitan Planning Commission (MTC) and Association of Bay Area Governments (ABAG). The project site is recognized by the MTC and ABAG as within the City-designated PDA called Transit Area Specific Plan.[81]

Local

City of Milpitas General Plan 2040

The following policies in the City's General Plan have been adopted for the purpose of reducing or avoiding impacts related to land use and are applicable to the project.

Policies	Description
Policy LU 1-8	Maintain equitable land use patterns to ensure that all residents in neighborhoods have access to community amenities and transportation choices, and have safe places to walk and bike.
Policy LU 2-1	Utilize Specific Plans to guide development within Milpitas's special planning areas. Properties located within Specific Plan areas shall conform to the underlying Specific Plan's land uses, zoning, and development standards.
Policy LU 3-1	Support regional efforts that promote higher densities near major transit and travel facilities, and reduce regional vehicle miles traveled by supporting active modes of transportation including walking, biking, and public transit. Support local and regional land use decisions that promote safe access to and the use of alternatives to auto transit.
Policy LU 4-2	Emphasize efforts to reduce regional vehicle miles traveled by supporting land use patterns and site designs that promote active modes of transportation, including walking, biking, and public transit.

[81] MTC GIS Data Catalog. *Priority Development Areas (Plan Bay Area 2050)*. Accessed January 9, 2024. https://opendata.mtc.ca.gov/datasets/4df9cb38d77346a289252ced4ffa0ca0/explore.

City of Milpitas Zoning Ordinance

The Zoning Ordinance serves as an implementing tool for the General Plan by establishing detailed, parcel-specific development regulations and standards. The Zoning Ordinance divides the City of Milpitas into zoning districts to guide future land uses.

4.11.1.2 *Existing Conditions*

The project site is located south of East Capitol Avenue at the convergence of South Milpitas Boulevard and the Penitencia East Channel. The project site includes an open stream channel and developed offices uses. Surrounding land uses include residential uses to the northeast, northwest, and southeast; office, residential (currently under construction), and light industrial uses are located to the south and southwest.

The project site has a General Plan designation of MMSP - Milpitas Metro Specific Plan. In the area of the proposed bridge, Penitencia East Channel (APN: 086-37-018) is zoned Park Open Space; the two parcels (APNs 086-37-039 and 086-37-040) north of the channel are zoned R5 (Urban Residential) and the parcels (APNs 086-36-030 and 086-36-041) south of the channel are respectively zoned R4 (Multi-Family-Very High Density) and R3 (Multi-Family).

4.11.2 Impact Discussion

	Potentially Significant Impact	Less than Significant with Mitigation Incorporated	Less than Significant Impact	No Impact
Would the project:				
1) Physically divide an established community?	☐	☐	☐	☒
2) Cause a significant environmental impact due to a conflict with any land use plan, policy, or regulation adopted for the purpose of avoiding or mitigating an environmental effect?	☐	☐	☒	☐

Impact LU-1: The project would not physically divide an established community. **(No Impact)**

Impacts to an established community can occur if the project physically divides a community. Examples of projects that could physically divide an established community include the construction of a physical feature (such as freeway, railway, or aqueducts) or the removal of a means of access (such as a local roadway or bridge). The project site is located in central Milpitas in an area developed with residential, light industrial, and commercial uses, and open space. The layout and design of the proposed project does not include any features that would physically divide the surrounding community. The proposed bridge across Penitencia East Channel and roadways connecting Sango Court and Tarob Court would enhance connectivity within the project area and provide direct access to the new Milpitas Transit Center for pedestrians and bicyclists in the existing and emerging residential neighborhoods located south of Penitencia East Channel. For these reasons, the project would not physically divide an established community.

Impact LU-2:	The project would not cause a significant environmental impact due to a conflict with any land use plan, policy, or regulation adopted for the purpose of avoiding or mitigating an environmental effect. **(Less than Significant Impact)**

The project proposes to construct a bridge and roadway connections consistent with the planned street network identified in the MMSP. The project would extend South Milpitas Boulevard across the Penitencia East Channel, thereby connecting the neighborhoods north and south of the channel. The proposed project would improve vehicular, bicycle, and pedestrian connectivity consistent with the goals and policies identified in the MMSP. For these reasons, the proposed project would not conflict with land use plans, policies, or regulations adopted for the purpose of avoiding or mitigating an environmental effect and would result in a less than significant impact.

4.12 MINERAL RESOURCES

4.12.1 Environmental Setting

4.12.1.1 *Regulatory Framework*

State

Surface Mining and Reclamation Act

The Surface Mining and Reclamation Act (SMARA) was enacted by the California legislature in 1975 to address the need for a continuing supply of mineral resources, and to prevent or minimize the negative impacts of surface mining to public health, property, and the environment. As mandated under SMARA, the State Geologist has designated mineral land classifications in order to help identify and protect mineral resources in areas within the state subject to urban expansion or other irreversible land uses which would preclude mineral extraction. SMARA also allowed the State Mining and Geology Board (SMGB), after receiving classification information from the State Geologist, to designate lands containing mineral deposits of regional or statewide significance.

4.12.1.2 ***Existing Conditions***

There are no designated mineral resource areas within the City of Milpitas.[82]

4.12.2 Impact Discussion

	Potentially Significant Impact	Less than Significant with Mitigation Incorporated	Less than Significant Impact	No Impact
Would the project:				
1) Result in the loss of availability of a known mineral resource that would be of value to the region and the residents of the state?	☐	☐	☐	☒
2) Result in the loss of availability of a locally important mineral resource recovery site delineated on a local general plan, specific plan, or other land use plan?	☐	☐	☐	☒

Impact MIN-1: The project would not result in the loss of availability of a known mineral resource that would be of value to the region and residents of the state. **(No Impact)**

The project site is located in central Milpitas in an area developed with residential, light industrial, and commercial uses. There are no known mineral resources within the project area; therefore, project implementation would not result in the loss of availability of a known mineral resource that would be of value to the region and residents of the state and no impact would occur.

[82] City of Milpitas. *Milpitas General Plan Final Environmental Impact Report*. January 2020. SCH 2020070348. Page 3.11-2.

Impact MIN-2:	The project would not result in the loss of availability of a locally important mineral resource recovery site delineated on a local general plan, specific plan, or other land use plan. **(No Impact)**

The project site is located in central Milpitas in an area developed with residential, light industrial, and commercial uses. The project area is not delineated in the General Plan, any Specific Plan, or other land use plan as a mineral resource recovery site. For these reasons, the project would not result in the loss of availability of a mineral resource recovery site and no impact would occur.

4.13 NOISE

The following discussion is based, in part, on a Noise & Vibration Assessment prepared for the project by Illingworth & Rodkin, Inc. The report, dated November 5, 2021, is attached to this Initial Study as Appendix E.

4.13.1 Environmental Setting

4.13.1.1 *Background Information*

Noise

Factors that influence sound as it is perceived by the human ear, include the actual level of sound, period of exposure, frequencies involved, and fluctuation in the noise level during exposure. Noise is measured on a decibel scale, which serves as an index of loudness. The zero on the decibel scale is based on the lowest sound level that the healthy, unimpaired human ear can detect. Each 10 decibel increase in sound level is perceived as approximately a doubling of loudness. Because the human ear cannot hear all pitches or frequencies, sound levels are frequently adjusted or weighted to correspond to human hearing. This adjusted unit is known as the A-weighted decibel, or dBA.

Since excessive noise levels can adversely affect human activities and human health, federal, state, and local governmental agencies have set forth criteria or planning goals to minimize or avoid these effects. Noise guidelines are generally expressed using one of several noise averaging methods, including L_{eq}, L_{dn}, or CNEL.[83] These descriptors are used to measure a location's overall noise exposure, given that there are times when noise levels are higher (e.g., when a jet is taking off from an airport or when a leaf blower is operating) and times when noise levels are lower (e.g., during lulls in traffic flows on freeways or in the middle of the night). L_{max} is the maximum A-weighted noise level during a measurement period.

Vibration

Ground vibration consists of rapidly fluctuating motions or waves with an average motion of zero. Vibration amplitude can be quantified using Peak Particle Velocity (PPV), which is defined as the maximum instantaneous positive or negative peak of the vibration wave. PPV has been routinely used to measure and assess ground-borne construction vibration. Studies have shown that the threshold of perception for average persons is in the range of 0.008 to 0.012 inches/second (in/sec) PPV.

[83] L_{eq} is a measurement of average energy level intensity of noise over a given period of time. Day-Night Level (L_{dn}) is a 24-hour average of noise levels, with a 10 dB penalty applied to noise occurring between 10:00 PM and 7:00 AM. Community Noise Equivalent Level (CNEL) includes an additional five dB applied to noise occurring between 7:00 PM and 10:00 PM. Where traffic noise predominates, the CNEL and L_{dn} are typically within two dBA of the peak-hour L_{eq}.

4.13.1.2 *Regulatory Framework*

Federal

Federal Transit Administration Vibration Limits

The Federal Transit Administration (FTA) has developed vibration impact assessment criteria for evaluating vibration impacts associated with transit projects. The FTA has proposed vibration impact criteria based on maximum overall levels for a single event. The impact criteria for groundborne vibration are shown in Table 4.13-1 below. These criteria can be applied to development projects in jurisdictions that lack vibration impact standards.

Table 4.13-1: Groundborne Vibration Impact Criteria

Land Use Category	Groundborne Vibration Impact Levels (VdB[1] inch/sec)		
	Frequent Event	Occasional Events	Infrequent Events
Category 1: Buildings where vibration would interfere with interior operations	65	65	65
Category 2: Residences and buildings where people normally sleep	72	75	80
Category 3: Institutional land uses with primarily daytime use	75	78	83

Source: Federal Transit Administration. *Transit Noise and Vibration Assessment Manual.* September 2018.
[1] Vibration Velocity Decibels

Local

City of Milpitas General Plan 2040

The following policies and actions in the City's General Plan have been adopted for the purpose of avoiding or mitigating noise and vibration impacts resulting from planned development within the City, including the following:

Policies/Actions	Description
Policy N 1-1	Consider the noise compatibility of existing and future development when making land use planning decisions. Require development and infrastructure projects to be consistent with the land use compatibility standards contained in Tables N-1 and N-2 to ensure acceptable noise exposure levels for existing and future development.

Policies/Actions	Description
Policy N 1-2	Require new development to mitigate excessive noise to the standards indicated in Tables N-1 and N-2 through best practices, including building location and orientation, building design features, placement of noise-generating equipment away from sensitive receptors, shielding of noise-generating equipment, placement of noise-tolerant features between noise sources and sensitive receptors, and use of noise-minimizing materials.
Policy N 1-3	Use sound walls for sound attenuation only when other measures are not practical, or when recommended by an acoustical expert as part of a mitigation measure. Sound walls shall be designed to be aesthetically pleasing, and should incorporate features such as vegetation, variations in color and texture, artwork, and other features deemed appropriate by the City.
Policy N 1-5	Require acoustical studies for new discretionary developments and transportation improvements that have the potential to affect existing noise-sensitive uses such as schools, hospitals, libraries, care facilities, and residential areas; and for projects that would introduce new noise-sensitive uses into an area where existing noise levels may exceed the thresholds identified in this element.
Policy N 1-6	For projects that are required to prepare an acoustical study to analyze noise impacts, the following criteria shall be used to determine the significance of those impacts: • Where existing traffic noise levels are 60 dB Ldn or less at the outdoor activity areas of noise-sensitive uses, a +5 dB Ldn increase in roadway noise levels will be considered significant; • Where existing traffic noise levels are greater than 60 dB Ldn and up to 65 dB Ldn at the outdoor activity areas of noise-sensitive uses, a +3 dB Ldn increase in roadway noise levels will be considered significant; and • Where existing traffic noise levels are greater than 65 dB Ldn at the outdoor activity areas of noise-sensitive uses, a + 1.5 dB Ldn increase in roadway noise levels will be considered significant.
Policy N 1-8	Require construction activities to comply with standard best practices to reduce noise exposure to adjacent sensitive receptors (see Action N-1d).
Policy N 1-9	Implement a range of traffic control measures, including but not limited to, light timing, asphalt alternatives (such as rubberized asphalt), and speed reduction measures to reduce roadway noise.
Action N-1a	Require that new development projects are reviewed for compliance with the noise requirements established in this element, including the standards established in Tables N-1 and N-2, prior to project approval.
Action N-1b	Require acoustical studies for new development projects which have the potential to generate noise impacts which exceed the standards identified in this element. The studies shall include representative noise measurements, estimates of existing and projected noise levels, and mitigation measures necessary to ensure compliance with the noise standards included in this element. Studies shall be conducted by a qualified acoustical professional.

Policies/Actions	Description
Action N-1c	Require developers to prepare a construction management/noise mitigation plan that defines best management practices to reduce construction noise, and includes proposed truck routes (that comply with Section 12 V-100-12.05 - Truck Routes of the Milpitas Municipal Code) as part of the entitlement process.
Action N-1d	During the environmental review process, determine if proposed construction will constitute a significant impact on nearby sensitive receptors and, if necessary, require mitigation measures in addition to the standard best practice controls. Suggested best practices for control of construction noise include: • Noise-generating construction activities, including truck traffic coming to and from the construction site for any purpose, shall be limited to between the hours of 7:00 am and 7:00 pm. No construction shall occur on National holidays. • All equipment driven by internal combustion engines shall be equipped with mufflers, which are in good condition and appropriate for the equipment. • The construction contractor shall utilize “quiet” models of air compressors and other stationary noise sources where technology exists. • At all times during project grading and construction, stationary noise-generating equipment shall be located as far as practicable from sensitive receptors and placed so that emitted noise is directed away from residences. • Unnecessary idling of internal combustion engines shall be prohibited for a duration of longer than five minutes. • Construction staging areas shall be established at locations that will create the greatest distance between the construction-related noise sources and noise-sensitive receptors nearest the project site during all project construction activities, to the extent feasible. • Neighbors located adjacent to the construction site shall be notified of the construction schedule in writing. • The construction contractor shall designate a “noise disturbance coordinator” who will be responsible for responding to any local complaints about construction noise. The disturbance coordinator shall be responsible for determining the cause of the noise complaint (e.g., starting too early, poor muffler, etc.) and instituting reasonable measures as warranted to correct the problem. A telephone number for the disturbance coordinator shall be conspicuously posted at the construction site.
Action N-1f	Petition State and Regional agencies to install “quiet pavement” materials during roadway improvement and resurfacing activities. Utilize quiet pavement materials on City-owned streets to the greatest extent feasible.

Table 4.13-2: Land Use Compatibility Guidelines for Community Noise

Land Use Category	Exterior Noise Exposure (L_{dn})					
	55	60	65	70	75	80
Single-Family Residential						
Multi-Family Residential, Hotels, and Motels						
Outdoor Sports and Recreation, Neighborhood Parks and Playgrounds						
Schools, Libraries, Museums, Hospitals, Personal Care, Public Assembly						
Office Buildings, Business Commercial, and Professional Offices						
Industrial						

Note: Residential components of Mixed-Use developments are subject to the Multi-Family Residential Noise Standards unless otherwise allowed in conjunction with Policy N 2-2.

Normally Acceptable:
Specified land use is satisfactory, based upon the assumption that any buildings involved are of normal conventional construction, without any special insulation requirements.

Conditionally Acceptable:
Specified land use may be permitted only after detailed analysis of the noise reduction requirements and needed noise insulation features included in the design.

Unacceptable:
New construction or development should generally not be undertaken because mitigation was found to be infeasible to comply with noise element policies.

City of Milpitas Municipal Code

Chapter 213 of the City's Municipal Code includes a Noise Abatement Section that limits noise levels at adjacent properties. Code Section V-213-3 limits construction operations to between the hours of 7:00 am and 7:00 pm on weekdays and weekends. Construction activities are not permitted on holidays.

Norman Y. Mineta San José International Airport Comprehensive Land Use Plan

The Norman Y. Mineta San José International Airport Comprehensive Land Use Plan (CLUP) is intended to safeguard the general welfare of the inhabitants within the vicinity of the airport and aircraft occupants. The CLUP establishes an airport land use planning area, referred to as the AIA. The AIA is a composite of areas surrounding the airport that are affected by noise, height, and safety considerations. The CLUP includes land use compatibility guidelines, with topics such as noise and building height, to ensure that surrounding land uses and development do not interfere with the airport's continuing operations.

4.13.1.3 *Existing Conditions*

The project site, which is located in south Milpitas, extends from the southern termination point of South Milpitas Boulevard across the Penitencia East Channel and the commercial property south of the channel before branching west and east to the termination points of Sango Court and Tarob Court, respectively. As shown in Figure 2.4-3, existing residential uses are present immediately north and east of the project site, with additional residences located further to the southwest.[84] The nearest sensitive receptors are located immediately west of the project site on Sango Court (Sango Apartments) and east of the project site (Parkside at Tarob Court).[85] Office uses are present at the site and to the south, and office, auto service, and commercial uses are located to the west. The nearest existing commercial receptor is located approximately 180 feet to the west.[86] Additionally, there is a church located approximately 400 west of the project site's western termination point (end of Sango Court).

The Norman Y. Mineta San José International Airport is located approximately three miles southwest of the project site.

Existing and Future Noise Levels

The primary noise sources at the project site are from vehicular traffic along Sango Court, Tarob Court, South Milpitas Boulevard, East Capitol Avenue, and Montague Expressway, and from commercial-related activities at businesses located along Sango Court and Tarob Court. The existing noise environment was quantified through two short-term (ST-1 and ST-2) and two long-term noise measurements (LT-1 and LT-2) conducted between Tuesday, October 12, 2021, and Thursday, October 14, 2021. The location of the noise measurement locations is shown on Figure 4.13-1. Based on these noise measurements, the typical hourly average noise level ranges between 42 to 60 dBA, with a day-night average noise level between 56 to 65 dBA L_{dn}.[87]

[84] Residences are also planned immediately south of the project site on Tarob Court.
[85] Ibid.
[86] Ibid.
[87] The day-night average noise level is higher than the typical hourly average noise level because a 10 dBA penalty is applied to noise that occurs between 10 p.m. and 7 a.m.

FIGURE 4.13-1

NOISE MEASUREMENT LOCATIONS

4.13.2 Impact Discussion

	Potentially Significant Impact	Less than Significant with Mitigation Incorporated	Less than Significant Impact	No Impact
Would the project result in:				
1) Generation of a substantial temporary or permanent increase in ambient noise levels in the vicinity of the project in excess of standards established in the local general plan or noise ordinance, or applicable standards of other agencies?	☐	☐	☒	☐
2) Generation of excessive groundborne vibration or groundborne noise levels?	☐	☐	☒	☐
3) For a project located within the vicinity of a private airstrip or an airport land use plan or, where such a plan has not been adopted, within two miles of a public airport or public use airport, would the project expose people residing or working in the project area to excessive noise levels?	☐	☐	☒	☐

4.13.2.1 *Thresholds of Significance*

The CEQA Guidelines state that a project would normally be considered to have a significant impact if noise levels conflict with adopted environmental standards or plans, or if noise levels generated by the project will substantially increase existing noise levels at noise-sensitive receivers on a permanent or temporary basis. CEQA does not define what noise level increase would be substantial. As discussed in CEQA Guidelines Section 15064(b), the determination of whether a project may have a significant effect on the environment calls for judgment on the part of the lead agency and must be based to the extent possible on scientific and factual data. For the purposes of this analysis, the City of Milpitas relies on the following as CEQA thresholds of significance:

- Construction Noise – Temporary construction-related noise would only be considered significant if it occurred outside of the permitted hours identified in the City's Municipal Code (7:00 a.m. to 7:00 p.m.) or on a holiday.
- Operational Noise: Permanent noise increases associated with operation of the project would only be considered significant if:
    - Project-generated traffic would result in a noise level increase of more than 5 dBA L_{dn} where existing traffic noise levels are 60 dBA L_{dn} or less.
    - Project-generated traffic would result in a noise level increase of more than 3 dBA L_{dn} where existing traffic noise levels are greater than 60 dBA L_{dn} and up to 65 dBA L_{dn}.
    - Project-generated traffic would result in a noise level increase of more than 1.5 dBA Ldn where existing traffic noise levels are greater than 65 dBA L_{dn}.

- Operation of the project would expose persons to or generate noise levels that would exceed applicable noise standards presented in the General Plan or Municipal Code (refer to Table 4.13-2 above).

- Construction Vibration: Vibration associated with project construction would only be considered significant if it would generate groundborne vibration levels in excess of 0.3 in/sec PPV.

Impact NOI-1:	The project would not result in generation of a substantial temporary or permanent increase in ambient noise levels in the vicinity of the project in excess of standards established in the local general plan or noise ordinance, or applicable standards of other agencies. **(Less than Significant Impact)**

Construction Noise

Noise impacts resulting from construction depend upon the noise generated by various pieces of construction equipment, the timing and duration of noise-generating activities, and the distance between construction noise sources and noise-sensitive areas. Construction noise impacts primarily result when construction activities occur during noise-sensitive times of the day (e.g., early morning, evening, or nighttime hours), the construction occurs in areas immediately adjoining noise-sensitive land uses, or when construction lasts over extended periods of time.

Construction activities would generate considerable amounts of noise, especially during earth-moving activities when heavy equipment is used. During each stage of construction, there would be a different mix of equipment operating, and noise levels would vary by stage and vary within stages, based on the amount of equipment in operation and the location at which the equipment is operating.

As described in Section 3.3.4, construction of the project is expected to occur over a period of 18 months between 2023 and 2024. Consistent with Section V-213-3(b) of the City's Municipal Code, construction activities would occur between 7:00 a.m. and 7:00 p.m., Monday through Sunday, excluding holidays. Equipment used during construction activities is expected to include, but is not limited to, graders, scrapers, dozers, backhoes, excavators, lo-drills, haul trucks, concrete pump trucks, concrete mixing trucks, telehandlers, cranes, manlifts, and pickup trucks.

The Federal Highway Administration's Roadway Construction Noise Model was used to calculate the hourly average noise levels for each stage of construction, assuming every piece of equipment would operate simultaneously, which would represent the worst-case scenario. Table 4.13-3 below shows the calculated construction noise levels at the surrounding land uses shown in Figure 2.4-3. Additional information on the methodology and assumptions used to estimate the project's construction noise levels is available in Appendix **E**.

Table 4.13-3: Calculated Construction Noise Levels at Surrounding Land Uses[1]			
Stage of Construction	**Hourly Average Noise Levels (dBA L_{eq})**		
	Future Multi-Family Residential[2] (180 feet west)	**Multi-Family Residential (200 feet north)**	**Single-Family Residential (300 feet east and south)**
Demolition	75	74	70
Site Preparation	74	73	69
Grading/Excavation	75	74	70
Paving	73	72	68
Bridge Construction	74	73	69

Source: Illingworth & Rodkin, Inc. *South Milpitas Boulevard Bridge Noise and Vibration Assessment*. November 5, 2021.

Notes:

[1] Since surrounding land uses would be subject to the collective noise generated by all equipment operating on-site, distances and noise levels are calculated from the geometrical center of the project site.

[2] At the time the Noise and Vibration Assessment was prepared, commercial uses were located 180 feet west. Multi-family residential is currently under construction.

As shown in Table 4.13-3, noise levels generated during construction would not exceed 77.5 dBA Leq at the nearest existing commercial use, 75 dBA L_{dn} at the nearest existing and future multi-family residential uses, or 70 dBA Leq at the nearest single-family residential use; therefore, project construction would not generate noise in excess of community noise compatibility guidelines (refer to Table 4.13-2). As noted above, project construction would comply with the restrictions placed on construction by Municipal Code Section V-213-3(b).[88] Additionally, noise generated by project construction would be further reduced through implementation of the following best practices for construction noise control required by General Plan Policy N 1-8.

- Noise-generating construction activities, including truck traffic coming to and from the construction site for any purpose, shall be limited to between the hours of 7:00 am and 7:00 pm. No construction shall occur on National holidays.
- All equipment driven by internal combustion engines shall be equipped with mufflers, which are in good condition and appropriate for the equipment.
- The construction contractor shall utilize “quiet” models of air compressors and other stationary noise sources where technology exists.
- At all times during project grading and construction, stationary noise-generating equipment shall be located as far as practicable from sensitive receptors and placed so that emitted noise is directed away from residences.
- Unnecessary idling of internal combustion engines shall be prohibited for a duration of longer than five minutes.

[88] Municipal Code Section V-213-3(b) restricts construction activities to the hours of 7 a.m. to 7 p.m., Monday through Sunday. No construction activities are permitted on holidays.

- Construction staging areas shall be established at locations that will create the greatest distance between the construction-related noise sources and noise-sensitive receptors nearest the project site during all project construction activities, to the extent feasible.
- Neighbors located adjacent to the construction site shall be notified of the construction schedule in writing.
- The construction contractor shall designate a "noise disturbance coordinator" who will be responsible for responding to any local complaints about construction noise. The disturbance coordinator shall be responsible for determining the cause of the noise complaint (e.g., starting too early, poor muffler, etc.) and instituting reasonable measures as warranted to correct the problem. A telephone number for the disturbance coordinator shall be conspicuously posted at the construction site.

Implementation of the above construction noise controls required by General Plan Policy N 1-8 would further reduce noise generated by project construction activities below the exterior noise exposure thresholds identified in Table 4.13-2; accordingly, project construction would not generate a substantial temporary increase in ambient noise levels in the project vicinity in excess of standards established by the City's General Plan and Municipal Code. As a result, the project would have a less than significant construction noise impact.

Operational Noise

As documented in Existing and Future Noise Levels, the existing noise level within the project vicinity ranges between 56 to 65 dBA L_{dn}; therefore, a significant operational noise impact would occur if the project would permanently increase ambient noise levels by up to three dBA (refer to 4.13.2.1). The project, which proposes to construct a bridge and roadway connection between Sango Court and Tarob Court, could increase ambient noise levels in the project vicinity from increased traffic volumes along roadway segments adjacent to nearby sensitive receptors (i.e. residences).

Based on a review of the Transportation Analysis prepared for the project (refer to Appendix F), the project would not double existing traffic volumes (which is the threshold where traffic would result in a three dBA noise increase), and would result in a noise level increase of one dBA L_{dn} along roadway segments within the project vicinity. Since operation of the project would not result in a permanent three dBA L_{dn} increase in ambient noise levels, the project would not generate a substantial permanent increase in ambient noise levels in the project vicinity in excess of standards established by the City's General Plan and Municipal Code. As a result, the project would have a less than significant operational noise impact.

Impact NOI-2:	The project would not result in generation of excessive groundborne vibration or groundborne noise levels. **(Less than Significant Impact)**

Construction of the project may generate perceptible vibration when heavy equipment or impact tools (e.g. jackhammers, hoe rams) are used in the vicinity of nearby sensitive land uses. As discussed under Impact NOI-1, construction activities would include building demolition, site preparation work, foundation work, and bridge construction. Impact pile driving (which generates substantial vibration) is not proposed as a method of construction.

According to the NRHP[89], CRHP[90], and City of Milpitas Cultural Resources Register, there are no historic buildings within the vicinity of the project site.[91] There would be no risk of damage to any historic buildings resulting from project construction.

Based on typical vibration levels generated by construction equipment, the vibration levels from project construction were estimated from the boundary of the project site, which would represent the nearest location for use of vibration generating equipment, at the nearest building facades (refer to Appendix E for more information on the methodology used to calculate vibration levels). The 0.5 in/sec PPV threshold would apply to the recently constructed Anton Apartments to the north and the Tarob Court Apartments to the east, which are located approximately 25 to 50 feet from the boundary of the project site. The 0.3 in/sec PPV threshold would apply to the commercial and industrial buildings to the south and west, which are located between 25 and 50 feet from the boundary of the project site. Table 4.13-4 below summarizes the vibration levels from construction levels at distances representing buildings in the project vicinity.

Table 4.13-4: Vibration Source Levels for Construction Equipment at Representative Distances

Equipment		PPV at 25 feet (in/sec)	PPV at 50 feet (in/sec)	PPV at 75 feet (in/sec)	PPV at 100 feet (in/sec)	PPV at 125 feet (in/sec)
Clam shovel drop		0.202	0.094	0.060	0.044	0.034
Hydromill (slurry wall)	In soil	0.008	0.004	0.002	0.002	0.001
	In rock	0.017	0.008	0.005	0.004	0.003
Vibratory Roller		0.210	0.098	0.063	0.046	0.036
Hoe Ram		0.089	0.042	0.027	0.019	0.015
Large bulldozer		0.089	0.042	0.027	0.019	0.015
Caisson drilling		0.089	0.042	0.027	0.019	0.015
Loaded trucks		0.076	0.035	0.023	0.017	0.013
Jackhammer		0.035	0.016	0.010	0.008	0.006
Small bulldozer		0.003	0.001	0.001	0.001	0.001

Source: Illingworth & Rodkin, Inc. *South Milpitas Boulevard Bridge Noise and Vibration Assessment*. November 5, 2021.

As shown in Table 4.13-4, vibration levels at 25 feet, which represents the distance between the boundary of the project site and the nearest buildings in all directions, would not exceed 0.3 PPV in/sec. Accordingly, the project would have a less than significant impact from generation of groundborne vibration or groundborne noise levels.

[89] National Register of Historic Places. "National Register Database and Research." Accessed January 9, 2024. https://www.nps.gov/subjects/nationalregister/database-research.htm
[90] California Register of Historic Places. "California Historical Resources." Accessed January 9, 2024. https://ohp.parks.ca.gov/listedresources/
[91] City of Milpitas. *Cultural Resources Register*.

Impact NOI-3:	The project would not be located within the vicinity of a private airstrip or an airport land use plan or, where such a plan has not been adopted, within two miles of a public airport or public use airport. The project would not expose people residing or working in the project area to excessive noise levels. **(Less than Significant Impact)**

The project site is outside of the AIA of the nearest airport, the Norman Y. Mineta San José International Airport, which is a public use airport located approximately to the three miles southwest. The project, which proposes to construct a bridge and roadway connection between Sango Court and Tarob Court, would not introduce any new residents to the project area. The project site is outside of the 60 dBA CNEL contour[92] delineated in the San José Airport CLUP, therefore, construction workers would not be exposed to excessive noise levels associated with aircraft operations.

[92] Santa Clara County Airport Land Use Commission. *San José International Airport 2022 Aircraft Noise Contours*. Figure 5.

4.14 POPULATION AND HOUSING

4.14.1 Environmental Setting

4.14.1.1 *Regulatory Framework*

State

Housing-Element Law

State requirements mandating that housing be included as an element of each jurisdiction's general plan is known as housing-element law. The Regional Housing Need Allocation (RHNA) is the state-mandated process to identify the total number of housing units (by affordability level) that each jurisdiction must accommodate in its housing element. California housing-element law requires cities to: 1) zone adequate lands to accommodate its RHNA; 2) produce an inventory of sites, known as Housing Opportunity Sites, that can accommodate its share of the RHNA; 3) identify governmental and non-governmental constraints to residential development; 4) develop strategies and a work plan to mitigate or eliminate those constraints; and 5) adopt a housing element and update it on a regular basis.[93] The City of Milpitas Housing Element and related land use policies were last updated in 2023 with the Housing Element remaining in effect through 2031.[94]

Regional

Plan Bay Area 2050

As discussed in 4.11.1.1, Plan Bay Area 2050 provides a regional growth strategy that integrates housing development into other key issue areas including transportation, land-use, economic growth, and climate change. The growth strategy focuses new housing and commercial development within Priority Development Areas that provide access to existing transit choices to new residents, workers, and visitors in the area.[95]

ABAG allocates regional housing needs to each city and county within the nine-county San Francisco Bay Area, based on statewide goals. ABAG also develops forecasts for population, households, and economic activity in the Bay Area. ABAG, MTC, and local jurisdiction planning staff created the Regional Forecast of Jobs, Population, and Housing, which is an integrated land use and transportation plan through the year 2050 (upon which Plan Bay Area 2050 is based).

[93] California Department of Housing and Community Development. "Regional Housing Needs Allocation and Housing Elements." Accessed January 9, 2024. http://hcd.ca.gov/community-development/housing-element/index.shtml.
[94] City of Milpitas. "Housing Policy & Plans". Accessed January 9, 2024. https://www.milpitas.gov/487/Housing-Policy-Plans.
[95] Metropolitan Transportation Commission. "Priority Development Areas (PDAs)" Accessed January 9, 2024. https://mtc.ca.gov/planning/land-use/priority-development-areas-pdas.

4.14.1.2 *Existing Conditions*

The total population of Milpitas was estimated to be approximately 81,067 people and 25,769 housing units in January 2023[96]. Milpitas is expected to increase its population to 103,970 people and 30,430 housing units by 2040.[97]

The project site includes an open stream channel and developed offices uses. The project site does not provide any housing.

4.14.2 Impact Discussion

	Potentially Significant Impact	Less than Significant with Mitigation Incorporated	Less than Significant Impact	No Impact
Would the project:				
1) Induce substantial unplanned population growth in an area, either directly (for example, by proposing new homes and businesses) or indirectly (for example, through extension of roads or other infrastructure)?	☐	☐	☒	☐
2) Displace substantial numbers of existing people or housing, necessitating the construction of replacement housing elsewhere?	☐	☐	☐	☒

Impact POP-1:	The project would not induce substantial unplanned population growth in an area, either directly (for example, by proposing new homes and businesses) or indirectly (for example, through extension of roads or other infrastructure). **(Less than Significant Impact)**

The proposed project would not involve the construction of new housing, nor would it generate any long-term employment opportunities that would cause substantial population growth. The construction workers needed for the project would be relatively few and these jobs would likely be filled by the local work force.

The project site is located with an area designated by the City to accommodate new housing and commercial development around the Milpitas Transit Center. The project would support the City's goal of developing housing in close proximity to existing transit by creating a new access point to the Milpitas Transit Center. The project would not induce unplanned population growth; therefore, the project would have a less than significant impact.

[96] State of California, Department of Finance. "E-5 Population and Housing Estimates for Cities, Counties, and the State, 2021-2023, with 2020 Benchmark." Accessed January 10, 2024. https://dof.ca.gov/forecasting/demographics/estimates/e-5-population-and-housing-estimates-for-cities-counties-and-the-state-2020-2023/.

[97] Association Of Bay Area Governments and Metropolitan Transportation Commission. "Projections 2040: Forecasts for Population, Household and Employment for the Nine County San Francisco Bay Area Region." 2017. Accessed January 10, 2024. http://projections.planbayarea.org/data.

Impact POP-2:	The project would not displace substantial numbers of existing people or housing, necessitating the construction of replacement housing elsewhere. **(No Impact)**

The project site is currently developed with office uses and does not contain housing. Therefore, project implementation would not result in the displacement of substantial numbers of existing people or housing and no impact would occur.

4.15 PUBLIC SERVICES

4.15.1 Environmental Setting

4.15.1.1 *Regulatory Framework*

State

Government Code Section 66477

The Quimby Act (included within Government Code Section 66477) requires local governments to set aside parkland and open space for recreational purposes. It provides provisions for the dedication of parkland and/or payment of fees in lieu of parkland dedication to help mitigate the impacts from new residential developments. The Quimby Act authorizes local governments to establish ordinances requiring developers of new residential subdivisions to dedicate parks, pay a fee in lieu of parkland dedication, or perform a combination of the two.

Government Code Section 65995 through 65998

California Government Code Section 65996 specifies that an acceptable method of offsetting a project's effect on the adequacy of school facilities is the payment of a school impact fee prior to the issuance of a building permit. Government Code Sections 65995 through 65998 set forth provisions for the payment of school impact fees by new development by "mitigating impacts on school facilities that occur (as a result of the planning, use, or development of real property" (Section 65996[a]). The legislation states that the payment of school impact fees "are hereby deemed to provide full and complete school facilities mitigation" under CEQA (Section 65996[b]).

Developers are required to pay a school impact fee to the school district to offset the increased demands on school facilities caused by the proposed residential development project. The school district is responsible for implementing the specific methods for mitigating school impacts under the Government Code.

Local

City of Milpitas General Plan 2040

The following policies in the City's General Plan have been adopted for the purpose of reducing or avoiding impacts related to public services.

Policies	Description
Policy SA 4-9	Ensure that fire and emergency medical services meet existing and future demand by maintaining a response time of four minutes or less for all urban service areas.

Measure K

Measure K, passed in November 2016, prevents areas in the City designated as parks and open space from being developed as residential, commercial, or industrial unless first approved by a two-thirds vote of residents.

City of Milpitas Metro Specific Plan

The MMSP adopted the following policies for the purpose of avoiding or mitigating public service related impacts resulting from planned development within the MMSP area, including the following:

Policies	Description
Policy M 5.1	Create a complete pedestrian and bicycle network that connects trails and pathways and includes continuous sidewalks and safe bike travel routes throughout the entire Milpitas Metro Area.
Policy PPS 3.1	Use the Recreational Value System to guide existing and future park improvements to ensure all parks provide a diversity of active, contemplative, and social gathering experiences.
Policy PPS 2.3	If a public utility easement (such as the one existing between Capitol Avenue and Penitencia Creek East Channel) is developed as a publicly-accessible pathway or linear park that connects two public streets, it can be counted toward a development's park dedication requirement
Policy ICS 8.1	Conduct a "standards of cover" analysis to determine the Metro Plan's precise impact on the Fire Department's staffing and equipment, and any required facility needs. Identify and evaluate potential sites for an expanded or new fire station near the Plan Area if the standards of cover analysis determines it is warranted.
Policy ICS 8.6	Update the City's emergency and disaster response plans to take the location and type of new development, and future traffic levels, into account.
Policy ICS 9.1	Hire additional police staff and purchase equipment provide an adequate level of service—as determined by City Council—for the residents, workers, and visitors of the Metro Area as well as surrounding areas. New equipment shall be funded by the Community Facilities District fee and new staff paid from the City's General Fund.

4.15.1.2 *Existing Conditions*

Fire Protection

The City of Milpitas Fire Department (MFD) provides fire protection services, medical emergency services, and public safety services. The MFD has four fire stations. The closest fire station to the project is Station 1, located at 777 South Main Street, approximately one mile northwest of the project site.

Police Services

Police services are provided by the City of Milpitas Police Department (MPD). Police protection services are operated from one central station located at 1275 North Milpitas Boulevard, which is approximately three miles north of the project site.

Schools

The project site is located within the Milpitas Unified School District (MUSD), Berryessa Union School District (BUSD), and East Side Union High School District (ESUHSD). The nearest schools to the project site include Stratford Elementary School (located 0.25 miles to the northwest) and Mabel Mattos Elementary School (located 0.3 miles to the west).

Parks

The City of Milpitas manages approximately 177 acres of developed city parkland and recreation facilities. In addition, Ed Levin County Park is partially within the City boundary and provides 1,544 acres of regional parkland.[98] The nearest park to the project site is Augustus Rathbone Park, located approximately 250 feet south of the project site. A publicly accessible privately owned linear park extends from the project's northwest corner on the northern side of Penitencia East Channel and extends southwest along the channel to the BART right-of-way.

Libraries

The Santa Clara County Library System operates nine libraries and one bookmobile. The Milpitas Library provides book lending services, offers a community room and meeting rooms, and is located approximately 1.9 miles northwest of the project site at 160 North Main Street.

4.15.2 Impact Discussion

	Potentially Significant Impact	Less than Significant with Mitigation Incorporated	Less than Significant Impact	No Impact
Would the project result in substantial adverse physical impacts associated with the provision of new or physically altered governmental facilities, need for new or physically altered governmental facilities, the construction of which could cause significant environmental impacts, in order to maintain acceptable service ratios, response times, or other performance objectives for any of the public services:				
1) Fire Protection?	☐	☐	☒	☐
2) Police Protection?	☐	☐	☒	☐
3) Schools?	☐	☐	☐	☒
4) Parks?	☐	☐	☐	☒
5) Other Public Facilities?	☐	☐	☐	☒

[98] City of Milpitas. *Milpitas General Plan Final Environmental Impact Report*. January 2020. SCH 2020070348

Impact PS-1:	The project would not result in substantial adverse physical impacts associated with the provision of new or physically altered governmental facilities, need for new or physically altered governmental facilities, the construction of which could cause significant environmental impacts, in order to maintain acceptable service ratios, response times, or other performance objectives for fire protection services. **(Less than Significant Impact)**

The project would construct a bridge over Penitencia East Channel, connecting South Milpitas Boulevard on the north side of the channel with Tarob Court and Sango Court on the south side of the channel. Construction of the proposed bridge would increase access to the surrounding area and would not result in an increase in the demand for fire protection services as the project does not introduce new residential units that would increase demand on fire protection services. The Metro Specific Plan SEIR concluded that there is the potential for additional fire protection staffing, equipment, and facilities to be needed to meet the demands of the additional buildout from the Metro Plan. New public facilities, including those for fire protection services, are subject to CEQA; thus, CEQA review would be conducted if and when such new facilities are advanced. Therefore, the proposed project would not result in a significant impact associated with new or physically altered government facilities and would improve the ability of fire services to maintain acceptable service ratios and response times.

Impact PS-2:	The project would not result in substantial adverse physical impacts associated with the provision of new or physically altered governmental facilities, need for new or physically altered governmental facilities, the construction of which could cause significant environmental impacts, in order to maintain acceptable service ratios, response times, or other performance objectives for police protection services. **(Less than Significant Impact)**

As discussed under Impact PS-1, the project would construct a bridge over Penitencia East Channel, connecting South Milpitas Boulevard on the north side of the channel with Tarob Court and Sango Court on the south side of the channel, thereby increasing access to the surrounding area. The proposed bridge and roadway connections would not increase demand on police protection services as the project does not introduce new residential units that would increase demand on police protection services. The Metro Specific Plan SEIR concluded that implementation of the Plan may require the construction of new police facilities. New public facilities, including those for police protection services, are subject to CEQA; thus, CEQA review would be conducted if and when such new facilities are advanced. Further, police protection services would be maintained at acceptable levels of service consistent with MMSP Policy ICS 9.1, which requires adequate hiring of police staff and equipment purchasing. Therefore, the project would not necessitate the construction or expansion of police protection facilities and would not result in substantial adverse physical impacts associated with the construction of new or expanded police protection services.

Impact PS-3:	The project would not result in substantial adverse physical impacts associated with the provision of new or physically altered governmental facilities, need for new or physically altered governmental facilities, the construction of which could cause significant environmental impacts, in order to maintain

	acceptable service ratios, response times, or other performance objectives for schools. **(No Impact)**

The proposed bridge and roadway connections would not generate new students as it does not propose new residential units to generate additional student demand to school facilities. Therefore, the proposed project would not increase the demand for new school facilities, nor would it require the construction or expansion of new school facilities and no impact would occur.

Impact PS-4:	The project would not result in substantial adverse physical impacts associated with the provision of new or physically altered governmental facilities, need for new or physically altered governmental facilities, the construction of which could cause significant environmental impacts, in order to maintain acceptable service ratios, response times, or other performance objectives for parks. **(No Impact)**

The proposed project would construct a bridge and roadway connections and would not increase demand on local park facilities. The project proposes 6-foot-wide Class II bicycle lanes along the proposed bridge. Additionally, the proposed roadway connections would include Class III shared lane bikeways. Consistent with MMSP Policy PPS 2.3, the proposed project would count towards the MMSP park dedication requirement and would facilitate the MMSP goal of developing public park space (MMSP Policy PPS 3.1). In addition, the project would not construct any land uses which would directly increase the resident population of the City. Therefore, the proposed project would have no impact on demand for local parks.

Impact PS-5:	The project would not result in substantial adverse physical impacts associated with the provision of new or physically altered governmental facilities, need for new or physically altered governmental facilities, the construction of which could cause significant environmental impacts, in order to maintain acceptable service ratios, response times, or other performance objectives for other public facilities. **(No Impact)**

As discussed above under Impact PS-1 through PS-4, the proposed project would construct a bridge and roadway connections and would not generate any new residents as no residential component is included. Therefore, the project would not increase demand for other public facilities such as libraries or community centers and no impact would occur.

4.16 RECREATION

4.16.1 Environmental Setting

4.16.1.1 *Regulatory Framework*

State

Government Code Section 66477

The Quimby Act (included within Government Code Section 66477) requires local governments to set aside parkland and open space for recreational purposes. It provides provisions for the dedication of parkland and/or payment of fees in lieu of parkland dedication to help mitigate the impacts from new residential developments. The Quimby Act authorizes local governments to establish ordinances requiring developers of new residential subdivisions to dedicate parks, pay a fee in lieu of parkland dedication, or perform a combination of the two.

Regional

Countywide Trails Master Plan

The Santa Clara County Trails Master Plan Update is a regional trails plan approved by the Santa Clara County Board of Supervisors. It provides a framework for implementing the County's vision of providing a contiguous trail network that connects cities to one another, cities to the county's regional open space resources, County parks to other County parks, and the northern and southern urbanized regions of the County. The plan identifies regional trail routes, sub-regional trail routes, connector trail routes, and historic trails.

Local

City of Milpitas General Plan 2040

The following policies in the City's General Plan have been adopted for the purpose of reducing or avoiding impacts related to recreation.

Policies	Description
Policy PROS 1-1	Provide a park and recreation system that is equitably distributed, safe, accessible, and designed to serve the needs of all residents of the community.
Policy PROS 1-2	Develop and maintain a high-quality system of parks, trails, and recreation facilities to create diverse opportunities for passive and organized recreation.
Policy PROS 1-8	Expand, renovate, and maintain high quality recreation facilities, programs, and services to accommodate existing and future needs; encourage traditional and non-traditional recreation; and support active and passive recreation, wellness, historic assets, cultural arts, environmental education, conservation, accessibility, inclusion, diversity, safety, and new technology that equitably serves the most vulnerable populations of the community.
Policy PROS 1-13	Require new development to provide direct pedestrian connections, such as sidewalks, trails, wayfinding measures and other rights-of-way and infrastructure

Policies	Description
	improvements to the existing and planned network of parks and trails wherever feasible.
Policy PROS 1-15	Design and maintain park and recreation facilities to minimize water, energy and chemical (e.g., pesticides and fertilizer) use. Incorporate the use of recycled water, native and/or drought-resistant vegetation and ground cover where appropriate. Pursue opportunities for multi-beneficial park developments that incorporate flood control facilities, stormwater management and groundwater recharge areas.

2022 Trail, Pedestrian, and Bicycle Master Plan

The Trail, Pedestrian, and Bicycle Master Plan provides a vision and action plan for the City to create a complete and connected network of bicycle and pedestrian facilities to support residents and visitors of all ages and abilities. The 2022 Plan serves as an update to the previously adopted Trail Master Plan (1997) and Bikeway Master Plan Update (2009) and focuses on supporting safer travel in and around Milpitas while maintaining and expanding connections with neighboring jurisdictions. The plan was adopted by the City in May 2022 and specifically acknowledges that the planned extension of Milpitas Boulevard to Tarob Court (i.e., the proposed project) would improve connections to the BART station/Milpitas Transit Station for all travel modes.

4.16.1.2 *Existing Conditions*

Parks, trails, and recreational facilities in the City are managed by the Recreation and Community Services Department and maintained by the Public Works Department. The City park system currently consists of over 30 parks, and five community service buildings including the Milpitas Community Center, Barbara Lee Senior Center, Milpitas Sports Center, Sal Cracolice Recreation Building, and Jose Higuera Adobe Building .[99,100] The nearest park to the project site is the Augustus Rathbone Park which includes a two playground structures, swings and, benches, located 225 feet south of the project site.

4.16.2 Impact Discussion

	Potentially Significant Impact	Less than Significant with Mitigation Incorporated	Less than Significant Impact	No Impact
1) Would the project increase the use of existing neighborhood and regional parks or other recreational facilities such that substantial physical deterioration of the facility would occur or be accelerated?	☐	☐	☒	☐

[99] City of Milpitas. "Parks & Facilities." Accessed January 10, 2024. https://ca-milpitas.civicplus.com/503/Parks-Facilities.
[100] City of Milpitas. "Parks." Accessed January 10, 2024. https://ca-milpitas.civicplus.com/831/Parks.

	Potentially Significant Impact	Less than Significant with Mitigation Incorporated	Less than Significant Impact	No Impact
2) Does the project include recreational facilities or require the construction or expansion of recreational facilities which might have an adverse physical effect on the environment?	☐	☐	☐	☒

Impact REC-1:	The project would not increase the use of existing neighborhood and regional parks or other recreational facilities such that substantial physical deterioration of the facility would occur or be accelerated. **(Less than Significant Impact)**

As discussed under Impact PS-4 in Section 4.15 Public Services, the project would not increase the demand on local park or recreational facilities. The project would construct a bridge to improve access across the Penitencia East Channel to and from the Milpitas BART Station/Milpitas Transit Station and surrounding neighborhoods.

The proposed project would increase accessibility to nearby parks. The project would not increase the service population as no new residential units are proposed, which otherwise could increase demand on parks and recreational facilities. Therefore, a less than significant impact to parks or recreational facilities would occur as a result of the proposed project.

Impact REC-2:	The project does not include recreational facilities or require the construction or expansion of recreational facilities which might have an adverse physical effect on the environment. **(No Impact)**

The proposed project does not propose or require the construction or expansion of existing recreational facilities that could have an adverse effect on the physical environment. Therefore, no impact would occur.

4.17 TRANSPORTATION

The following discussion is based, in part, on a Transportation Analysis prepared for the project by Hexagon Transportation Consultants, Inc. The report, dated October 1, 2021, is attached to this Initial Study as Appendix G.

4.17.1 Environmental Setting

4.17.1.1 *Regulatory Framework*

State

Regional Transportation Plan

MTC is the transportation planning, coordinating, and financing agency for the nine-county San Francisco Bay Area, including Santa Clara County. MTC is charged with regularly updating the Regional Transportation Plan, a comprehensive blueprint for the development of mass transit, highway, airport, seaport, railroad, bicycle, and pedestrian facilities in the region. MTC and ABAG adopted Plan Bay Area 2040 in July 2017, which includes a Regional Transportation Plan to guide regional transportation investment for revenues from federal, state, regional and local sources through 2040.

Senate Bill 743

SB 743 establishes criteria for determining the significance of transportation impacts using a vehicle miles traveled (VMT) metric intended to promote the reduction of GHG emissions, the development of multimodal transportation networks, and a diversity of land uses. Specifically, SB 743 requires analysis of VMT in determining the significance of transportation impacts. Local jurisdictions were required by Governor's Office of Planning and Research (OPR) to implement a VMT policy by July 1, 2020.

SB 743 did not authorize OPR to set specific VMT impact thresholds, but it did direct OPR to develop guidelines for jurisdictions to utilize. Specifically, CEQA Guidelines Section 15064.3(b)(2) provides that projects that reduce VMT, such as pedestrian, bicycle, and transit projects, would have a less than significant impact. This section further provides that lead agencies have discretion to evaluate roadway capacity projects (including highways), provided that any such analysis is consistent with the requirements of CEQA. Recognizing that roadway capacity projects may be analyzed at a programmatic level, subdivision (b)(2) states that lead agencies may be able to tier from a programmatic analysis that adequately addresses the effects of roadway capacity projects.

Regional and Local

Congestion Management Program

VTA oversees the Congestion Management Program (CMP), which is aimed at reducing regional traffic congestion. The relevant state legislation requires that urbanized counties in California prepare a CMP in order to obtain each county's share of gas tax revenues. State legislation requires that each CMP define traffic level of service (LOS) standards, transit service standards, a trip reduction and transportation demand management plan, a land use impact analysis program, and a capital

improvement element. VTA has review responsibility for proposed development projects that are expected to affect CMP-designated intersections.

City Milpitas General Plan 2040

The following policies in the City's General Plan have been adopted for the purpose of reducing or avoiding impacts related to transportation and are applicable to the project.

Policies	Description
Policy CIR 2-1	Promote multimodal transportation options by developing an interconnected system of streets, roads, bridges, and highways that provides continuous, efficient, safe and convenient travel for all users regardless of mode, age or ability and encourage users to walk, ride a bicycle, or use transit for shorter, local trips.
Policy CIR 2-7	Provide inclusive and diverse wayfinding measures to provide directional guidance for pedestrians, bicyclists, and transit riders.
Policy CIR 4-2	Link and expand City pedestrian and bicycle circulation facilities to existing and planned local and regional networks, with an emphasis on expanding infrastructure options near transit.
Policy CIR 4-3	Encourage walking, biking and transit use by prioritizing and implementing "first-mile/last mile" improvements, wayfinding and educational efforts in the vicinity of the Great Mall transit center, light rail stations, the BART station/Milpitas Transit Station, and heavily used bus stops.
Policy CIR 4-5	Support building bridges or under-crossings across creek channels, railroad lines and roadways in a manner that will enhance safety, improve network connectivity, and facilitate bicycling and walking between high density residential developments, retail centers, civic buildings, and recreational centers.
Policy CIR 4-7	Work collaboratively with the community to discover and develop connections between the multi-use paths and the on-street bicycle system to support development of a comprehensive network, with an emphasis on areas with limited access and/or higher health disparities.

Transportation Analysis Policy (City Council Resolution No. 9070)

As established in City Council Resolution No. 9070, the City of Milpitas uses vehicle miles traveled (VMT) as the metric to assess transportation impacts from new development. According to the policy, projects are presumed to have a less than significant impact if they generate 110 daily trips or less, are local serving retail projects under 100,000 sf or less, city facilities, or certain types of affordable housing, are projects meeting the transit screening requirements, or are transportation project that maintain or reduce VMT. If a project's VMT does not meet the established thresholds, mitigation measures would be required, where feasible. The policy also requires preparation of a Transportation Operational Analysis to analyze other potentially adverse project impacts including LOS impacts, Santa Clara County CMP conformance, multimodal analysis of pedestrian, bicycle and transit facilities, traffic signal warrant, site access and circulation, neighborhood traffic issues, and other transportation related analysis as deemed necessary by the "City Engineer".

The VMT thresholds of significance are established based on the countywide average VMT. Project impacts would be considered significant for both residential and employment projects if they fall below 15 percent of the countywide average.

City of Milpitas Metro Specific Plan

The MMSP adopted the following policies for the purpose of avoiding or mitigating transportation impacts resulting from planned development within the MMSP area, including the following:

Policies	Description
M 1.5	Review individual development applications to ensure that adequate street right-of-way, bicycle facilities, pedestrian facilities and landscaping are provided and are consistent with the policies and standards in Chapter 3: Site and Building Design Standards and Guidelines [of the Metro Plan].
M 5.1	Create a complete pedestrian and bicycle network that connects trails and pathways and includes continuous sidewalks and safe bike travel routes throughout the entire Milpitas Metro Area.

2022 Trail, Pedestrian, and Bicycle Master Plan

The Trail, Pedestrian, and Bicycle Master Plan provides a vision and action plan for the City to create a complete and connected network of bicycle and pedestrian facilities to support residents and visitors of all ages and abilities. The Plan serves as an update to the previously adopted Trail Master Plan (1997) and Bikeway Master Plan Update (2009) and focuses on supporting safer travel in and around Milpitas while maintaining and expanding connections with neighboring jurisdictions. The plan was adopted by the City in May 2022 and specifically acknowledges that the planned extension of Milpitas Boulevard to Tarob Court (i.e., the proposed project) would improve connections to the BART Station/Milpitas Transit Station for all travel modes.

4.17.1.2 *Existing Conditions*

Roadway Network

Regional access to the project site is provided by I-880 and I-680. Local access to the project site is provided via Montague Expressway, Capitol Avenue, and Trade Zone Boulevard. Within the project vicinity, primary public streets include Sango Court, Tarob Court, South Milpitas Boulevard, and East Capitol Avenue. The freeways and local roadways are described below.

I-880 connects from the highway interchange I-280 and State Route (SR) 17 in San Jose to I-580 in Oakland. It is generally an eight-lane freeway through Milpitas. The section of I-880 at the Montague Expressway overcrossing has eight mixed-flow lanes. Access to the project site is provided via a full interchange at Montague Expressway.

I-680 connects from US 101 in San Jose to I-80 in Fairfield. It is generally an eight-lane freeway through Milpitas. The section of I-680 at the Montague Expressway overcrossing has eight mixed-flow lanes. Access to the project site is provided via a full interchange at Montague Expressway and North Capitol Avenue.

Montague Expressway is an east-west roadway that starts at the intersection of Scott Boulevard and San Tomas Expressway in the west and ends at the intersection of South Park Victoria Drive/Morrill Avenue and Landess Avenue in the east. It is primarily a six to eight lane expressway and connects to the following freeways: US 101, I-880, and I-680.

Capitol Avenue is a north-south, six-lane divided arterial roadway in the project vicinity extending from Montague Expressway in the north, where it becomes Great Mall Parkway, to San José in the south. It provides direct access to the project area and the Milpitas Transit Center via its intersection with Milpitas Boulevard.

Trade Zone Boulevard is an east-west, four-lane roadway, extending from Montague Expressway in the west to Capitol Avenue in the east. It provides access to the project vicinity via Lundy Place and several local residential streets within the MMSP.

Milpitas Boulevard is a two-lane, north-south roadway south of Capitol Avenue, and a four lane east-west, roadway serving the Milpitas Transit Center north of Capitol Avenue. South of Capitol Avenue, it currently terminates at Penitencia Creek.

Tarob Court is a two-lane roadway extending west from Lundy Place. It provides access to the office/industrial buildings located to the west of Lundy Place and terminates in a cul-de-sac approximately 800 feet west of Lundy Place. Tarob Court provides direct access to the project site via a single driveway.

Sango Court is a two-lane roadway extending east from Montague Expressway. It provides access to existing office/industrial buildings and terminates in a cul-de-sac approximately 500 feet east of Montague Expressway.

Lundy Place is a north-south, two-lane roadway extending from the Union Pacific Railroad tracks in the north to Trade Zone Boulevard in the south, where it becomes Lundy Avenue. Lundy Place terminates in a cul-de-sac approximately 650 feet north of Tarob Court.

Bicycle Facilities

Existing bicycle access to the project vicinity is provided primarily via a network of Class II bike lanes and Class III bike routes which are shared with vehicular traffic. Class I bicycle facilities (off-street paths) are provided along Penitencia East Channel, from Montague Expressway to Lower Penitencia Creek. Buffered Class II bike lanes are provided along Trade Zone Boulevard. Conventional Class II bike lanes are present on Lundy Avenue south of Trade Zone Boulevard, McCandless Drive, and Capitol Avenue. Existing Class III bike routes are present on Montague Expressway.

An existing approximately 12-foot-wide multi-use trail runs from the project site at South Milpitas Boulevard to the southeast along the Penitencia East Channel and ends at the BART right-of-way.

Pedestrian Facilities

The signalized intersections serving the project vicinity generally provide crosswalks and the majority of streets in the project vicinity provide sidewalks, with the exception of Trade Zone Boulevard, the west side of Lundy Avenue north of Trade Zone Boulevard, both sides of Sango Court, and the west side of Tarob Court.

Transit Facilities

Existing transit services in the project vicinity are provided by AC Transit and VTA buses, VTA light rail (LRT), and BART at the Milpitas Transit Center and surrounding roadways including Montague Expressway, East Capitol Avenue, and Trade Zone Boulevard. The Milpitas Transit Center services include the Milpitas BART station/Milpitas Transit Station, VTA's Montague LRT station, several bus routes at a bus transfer facility, and a park-and-ride lot. BART provides regional service to the East Bay and San Francisco and AC Transit serves western Alameda County, while VTA bus and light rail serve Santa Clara County which include connections to Caltrain and Downtown San José.

Bus Service

The project site is primarily served by six local bus lines and three frequent bus lines. All bus lines are accessible at the Milpitas Transit Center's bus transfer facility approximately 800 feet north of the project site. VTA buses service the Milpitas BART Station/Milpitas Transit Station which include:

- Frequent Route 60 providing service between Milpitas BART and Winchester LRT Station via San José International Airport;
- Frequent Route 66 providing service between Milpitas BART and Kaiser San José;
- Frequent Route 77 providing service between Milpitas BART and Eastridge via King Road;
- Local Route 20 providing service between Milpitas BART and Sunnyvale Transit Center;
- Local Route 44 providing service between Milpitas BART and McCarthy Ranch via East Tasman Drive and Alder Drive;
- Local Route 47 providing service between Milpitas BART and McCarthy Ranch via Park Victoria;
- Local Route 70 providing service between Milpitas BART and Eastridge via North Jackson Avenue;
- Local Route 71 providing service between Milpitas BART and Capitol LRT Station.

AC Transit Line 217 provides service between Milpitas BART and Fremont BART.

VTA Light Rail Transit Service

The project is located in close proximity to the Milpitas Transit Center and is served by the Mountain View–Alum Rock LRT line.

BART Service

The project site is located approximately 800 feet south of the Milpitas Transit Center, which includes regional BART service. The two lines run service between North San José and Daly City

and North San José and Daly City separately with connections to San Francisco International Airport and Oakland International Airport.

4.17.2 Impact Discussion

	Potentially Significant Impact	Less than Significant with Mitigation Incorporated	Less than Significant Impact	No Impact
Would the project:				
1) Conflict with a program, plan, ordinance, or policy addressing the circulation system, including transit, roadways, bicycle lanes, and pedestrian facilities?	☐	☐	☒	☐
2) Conflict or be inconsistent with CEQA Guidelines Section 15064.3, subdivision (b)?	☐	☐	☒	☐
3) Substantially increase hazards due to a geometric design feature (e.g., sharp curves or dangerous intersections) or incompatible uses (e.g., farm equipment)?	☐	☐	☒	☐
4) Result in inadequate emergency access?	☐	☐	☒	☐

Impact TRN-1: The project would not conflict with a program, plan, ordinance, or policy addressing the circulation system, including transit, roadways, bicycle lanes, and pedestrian facilities. **(Less than Significant Impact)**

Pedestrian Facilities

The project would install 6-foot wide sidewalks on each side of the proposed bridge and 5-foot wide sidewalks on both sides of Sango Court and Tarob Court. The proposed changes would improve pedestrian connectivity and safe routes to the surrounding destinations consistent with General Plan Policy CIR 4-5. The sidewalk width is based upon MMSP standards for new local neighborhood streets (Figure 4-13 of the MMSP). The 2022 Trail, Pedestrian, and Bicycle Master Plan specifically acknowledges that the proposed project would improve connections to the BART station/Milpitas Transit Station for all travel modes. Therefore, the project would not conflict with a program, plan, ordinance, or policy regarding pedestrian facilities and impacts would be less than significant.

Bicycle Facilities

The project proposes 6-foot-wide Class II bicycle lanes along the proposed bridge. Additionally, the proposed roadway connections would include Class III shared lane bikeways. The 2022 Trail, Pedestrian, and Bicycle Master Plan specifically acknowledges that the proposed project would improve connections to the BART station/Milpitas Transit Station for all travel modes. The proposed bikeways would improve bicycle facilities in the project area; therefore, the project would not conflict with a program, plan, ordinance, or policy regarding bicycle facilities and impacts would be less than significant.

Transit Facilities

The project site is adequately served by the Milpitas Transit Center. The project would improve vehicular, bicycle, and pedestrian connectivity in the project vicinity consistent with the goals and policies identified in the MMSP. The project would not preclude, modify, or otherwise affect existing or proposed transit projects or policies identified by the VTA. The project would not increase transit delay but could reduce bus delays on surrounding streets by shortening the length of roadway trips in the project vicinity (refer to discussion under Impact TRN-2). Overall, the project would increase transit accessibility by providing a more convenient bike and pedestrian link to the surrounding transit uses. Therefore, the project would not conflict with a program, plan, ordinance, or policy regarding transit facilities and impacts would be less than significant.

Roadway Facilities

The project would create a roadway network that establishes alternative routes via South Milpitas Boulevard for travelers both north and south of the Penitencia East Channel to access community resources, including the Milpitas Transit Center and industrial areas south of Trade Zone Boulevard. The current route across Penitencia East Channel follows through the intersections of Montague Expressway/Capitol Avenue and Trade Zone Boulevard/Montague Expressway, which are congested intersections during peak commute periods (see Table 4.17-2 below). Therefore, the project would not conflict with a program, plan, ordinance, or policy regarding roadway facilities and impacts would be less than significant.

Impact TRN-2:	The project would not conflict or be inconsistent with CEQA Guidelines Section 15064.3, subdivision (b). **(Less than Significant Impact)**

This question pertains specifically to VMT as the means of analyzing the transportation impacts of a project. As described in Section 4.17.1.1 Regulatory Framework, the City's adopted Transportation Analysis Policy (City Council Resolution No. 9070) sets forth the thresholds of significance and methodology for analyzing the VMT impacts of development projects.

The City's Transportation Analysis Policy establishes screening criteria to determine which projects require a detailed VMT analysis. If a project meets the relevant screening criteria, it is considered to a have a less than significant VMT impact. The City's guidelines state that several types of roadway projects are exempt from quantitative VMT analysis, including projects that result in the:

- Addition of roadway capacity on local or collector streets provided the project also substantially improves conditions for pedestrians, cyclists, and, if applicable, transit.

The project proposes to construct a bridge across Penitencia East Channel. The proposed bridge would serve vehicles, pedestrians, and cyclists and would connect South Milpitas Boulevard on the north side of the channel with Tarob Court and Sango Court on the south side of the channel. The proposed bridge would include 11-foot vehicle lanes, six-foot bicycle lanes, and six-foot sidewalks in each direction. The connecting roadways (Tarob Court to Sango Court) would include 11-foot-wide travel lanes for both vehicles and bicycles in each direction and five-foot wide sidewalks on both

sides of the street. The project would link land uses within the MMSP area to the surrounding roadway network, resulting in the overall shortening of trips through the area. Based on the project's design and proximity to the Milpitas Transit Center, the project's VMT impacts would be considered less than significant, according to the City's Transportation Analysis Policy.

The Milpitas Travel Demand Forecast (TDF) Model was utilized to determine if the project would reduce VMT.[101] The results are shown in Table 4.17-1.

Table 4.17-1: VMT Within the Project Vicinity

Scenario	Daily Vehicle Miles Traveled			Daily Vehicle Hours Traveled		
	No Bridge	w/ Bridge	Difference	No Bridge	w/ Bridge	Difference
Near-Term	83,658	83,373	-285	2,087	2,078	-9.8
2040	83,042	82,697	-345	2,272	2,261	-11.0

Note: The 2040 VMT is slightly less in year 2040 compared to the near-term, even though there is more development assumed in the TSAP area in year 2040. The reduction in VMT is caused by:

(1) higher development densities in the TSAP area which increases nonmotorized travel and transit use;

(2) increased congestion of the roadway system making transit more attractive; and

(3) Phase II BART extension to San Jose and Santa Clara, which includes four new BART stations and BART trains running on more frequent headways.

As shown in Table 4.17-1, the project would reduce the daily VMT in the area by 285 in the near term and by 345 by year 2040. Similarly, daily vehicle-hours of travel would also decrease, by 9.8 hours and 11.0 hours in the near-term and year 2040, respectively. The reduction in VMT is due to higher development densities in the TSAP area which increases nonmotorized travel and transit use; increased congestion of the roadway system making transit more attractive; and the Phase II BART extension to San José and Santa Clara, which includes four new BART stations and BART trains running on more frequent headways. For these reasons, the project would result in a less than significant VMT impact.

Impact TRN-3:	The project would not substantially increase hazards due to a geometric design feature (e.g., sharp curves or dangerous intersections) or incompatible uses (e.g., farm equipment). **(Less than Significant Impact)**

The project proposes to construct a bridge extending South Milpitas Boulevard across Penitencia East Channel connecting to Tarob Court and Sango Court on the south side of the channel. The proposed bridge and roadway connections would comply with the design guidelines specified in the MMSP.

Adequate sight distance is required at the project intersections in accordance with the AASHTO standards to avoid collisions and provide drivers with the ability to turn safely. Posted speed limits for new local streets would be 25 to 35 miles per hour. The AASHTO stopping sight distance for a

[101] The Milpitas TDF model is an approved tool for estimating VMT within the City of Milpitas. The tool was updated and refined during General Plan update (2021) and is based upon the VTA countywide TDF model.

roadway with a posted speed limit of 25 mph is 200 feet midblock and 125 feet from a corner. Following the demolition of the office building, post-construction conditions would not include buildings or vegetation (i.e., trees with wide trunks and low canopies) that would impede the sight distance for turning drivers at the sign-controlled intersection of Tarob Court, Sango Court, and South Milpitas Boulevard. Based on the above discussion, the project would have less than significant impacts related to hazards due to geometric design.

The project does not propose a use that is incompatible with the existing mix of uses in the project area or propose a use that would bring unusual equipment on the roadways (e.g., farm equipment). Thus, the project would not result in a significant impact due to incompatible uses.

Impact TRN-4:	The project would not result in inadequate emergency access. **(Less than Significant Impact)**

The proposed project would improve access across the Penitencia East Channel to and from the Milpitas BART Station/Milpitas Transit Station and surrounding neighborhoods. The bridge would be designed to accommodate emergency vehicle access. The design of the bridge and roadway connections would be reviewed for consistency with applicable Milpitas Fire Department standards. The project does not contain inadequate emergency access characteristics that would impair the performance of the 2021 City's Emergency Management Program Assessment and Implementation Plan. For these reasons, the proposed project would not result in inadequate emergency access and would comply with City guidelines for emergency access and impacts would be less than significant.

4.17.3 Non-CEQA Effects

While the evaluation of project CEQA impacts on the transportation system is based on VMT, in accordance with the City of Milpitas Transportation Analysis Policy (City Council Resolution No. 9070), the following discussion is included for informational purposes because Resolution No. 9070 requires preparation of a Transportation Operational Analysis to analyze non-CEQA transportation issues, including local transportation operations, intersection level of service, CMP conformance, site access and circulation, and neighborhood transportation issues such as pedestrian and bicycle access, and transportation improvements.

Intersection Level of Service

A level of service (LOS) analysis was conducted to determine the effects of the project on intersection delays. The analysis evaluated LOS at the following major intersections:

1. East Capitol Avenue and Milpitas Boulevard
2. Trade Zone Boulevard and Lundy Avenue
3. Montague Expressway and Trade Zone Boulevard
4. Montague Expressway and Great Mall Parkway
5. Montague Expressway and Sango Court

The five intersections were evaluated under near-term conditions (existing conditions plus approved projects) and year 2040 conditions during the AM (7:00 a.m. to 9:00 a.m.) and PM (4:00 a.m.to 6:00 p.m.) peak commuting periods. The results of the analysis are shown in Table 4.17-2.

The results of the LOS analysis show the project would increase the amount of traffic and delays at the intersection of Capitol Avenue and Milpitas Boulevard, as residents south of the proposed bridge access Capitol Avenue. In addition, the proposed bridge would decrease or maintain the delays along Montague Expressway, with the largest delay decreases occurring at the intersection of Montague Expressway and Trade Zone Boulevard.

Table 4.17-2: Study Intersections Level of Service Summary															
No.	**Intersection (Traffic Control)**	**Peak Hour**	**Existing**		**Near Term**					**Year 2040**					
					No Project		**With Project**			**No Project**		**With Project**			
			Avg. Delay[1]	**LOS**	**Avg. Delay[1]**	**LOS**	**Avg. Delay[1]**	**LOS**	**Change in Delay**	**Avg. Delay[1]**	**LOS**	**Avg. Delay[1]**	**LOS**	**Change in Delay**	
1	Capitol Avenue and Milpitas Boulevard (Signal)	AM PM	19.7 15.5	B B	26.5 18.7	C B	26.8 20.6	C C	0.3 1.9	114.3 135.7	F F	114.3 139.1	F F	0.0 3.4	
2	Lundy Avenue and Trade Zone Boulevard (Signal)	AM PM	30.3 41.8	C D	31.9 49.7	C D	31.9 49.8	C D	0.0 0.1	87.1 77.8	F E	87.9 77.7	F E	0.8 -0.1	
3	Montague Expressway and Trade Zone Boulevard (Signal)	AM PM	97.5 65.9	F E	135.3 83.4	F F	134.3 79.9	F E	-1.0 -3.5	230.9 90.5	F F	225.9 89.4	F F	-5.0 -1.1	
4	Montague Expressway and Capitol Avenue (Signal)	AM PM	42.4 69.6	D E	45.1 72.7	D E	45.1 73.8	D E	0.0 1.1	56.8 187.3	E F	56.7 187.3	E F	-0.1 1.1	
5	Montague Expressway and Sango Court (SSSC)[2]	AM PM	0.2/9.9 0.2/14.5	A/A A/B	0.9/10.7 0.5/17.3	A/B A/C	0.9/10.7 0.5/17.1	A/B A/B	0.0/0.0 0.0/-0.2	0.8/14.8 0.9/36.5	A/B A/E	0.9/14.9 0.8/34.9	A/B A/D	0.1/1.0 -0.1/1.6	

[1] Signalized intersection level of service is based on the Highway Capacity Manual (HCM) methodology, using average control delay f or the entire intersection. For unsignalized intersection at Montague/Sango, average intersection delay/approach with highest delay based on HCM methodology are shown.
[2] SSSC = Side street stop control

4.18 TRIBAL CULTURAL RESOURCES

4.18.1 Environmental Setting

4.18.1.1 *Regulatory Framework*

State

Assembly Bill 52

AB 52, effective July 2015, established a new category of resources for consideration by public agencies called Tribal Cultural Resources (TCRs). AB 52 requires lead agencies to provide notice of projects to tribes that are traditionally and culturally affiliated with the geographic area if they have requested to be notified. Where a project may have a significant impact on a tribal cultural resource, consultation is required until the parties agree to measures to mitigate or avoid a significant effect on a tribal cultural resource or until it is concluded that mutual agreement cannot be reached.

Under AB 52, TCRs are defined as follows:

- Sites, features, places, cultural landscapes, sacred places, and objects with cultural value to a California Native American tribe that are also either:
    - Included or determined to be eligible for inclusion in the California Register of Historic Resources, or
    - Included in a local register of historical resources as defined in Public Resources Code Section 5020.1(k).
- A resource determined by the lead agency to be a TCR.

Local

City of Milpitas General Plan 2040

The following policies in the City's General Plan have been adopted for the purpose of reducing or avoiding impacts related to tribal cultural resources and are applicable to the proposed project.

Policies	Description
Policy CON 4-1	Review proposed developments and work in conjunction with the California Historical Resources Information System, Northwest Information Center at Sonoma State University, to determine whether project areas contain known archaeological resources, either prehistoric and/or historic-era, or have the potential for such resources.
Policy CON 4-2	If found during construction, ensure that human remains are treated with sensitivity and dignity, and ensure compliance with the provisions of California Health and Safety Code Section 7050.5 and California Public Resources Code Section 5097.98.

Policies	Description
Policy CON 4-3	Work with Native American representatives to identify and appropriately address, through avoidance or mitigation, impacts to Native American cultural resources and sacred sites during the development review process
Policy CON 4-4	Consistent with State, local, and tribal intergovernmental consultation requirements such as SB 18 and AB 52, the City shall consult as necessary with Native American tribes that may be interested in proposed new development and land use policy changes.
Policy CON 5-1	Protect significant historic resources and use these resources to promote a sense of place and history in Milpitas through implementation of the Milpitas Cultural Resources Preservation Program (Municipal Code, Title XI, Chapter 4), the Conceptual Historic Resources Master Plan, the conservation and preservation of the City's historical collection at the Milpitas Community Museum, and other applicable codes, regulations, and area plans.

4.18.1.2 *Existing Conditions*

According to the General Plan, no specific resources have been identified through consultation with affiliated Native American tribes. Unknown tribal cultural resources, however, could be present within the City.

On June 14, 2021, Tamien Nation sent a written request for notification of projects citywide to the City of Milpitas. The City of Milpitas notified Tamien Nation of the project on March 1, 2022 per the representative's request. On May 4, 2022, the City met with Tamien Nation Chairwoman Quirina Geary and concluded consultation on September 13, 2022.[102]

4.18.2 <u>Impact Discussion</u>

	Potentially Significant Impact	Less than Significant with Mitigation Incorporated	Less than Significant Impact	No Impact
Would the project cause a substantial adverse change in the significance of a tribal cultural resource, defined in Public Resources Code Section 21074 as either a site, feature, place, cultural landscape that is geographically defined in terms of the size and scope of the landscape, sacred place, or object with cultural value to a California Native American tribe, and that is:				
1) Listed or eligible for listing in the California Register of Historical Resources, or in a local register of historical resources as defined in Public Resources Code Section 5020.1(k)?	☐	☒	☐	☐

[102] City of Milpitas. *Leon Taing, PE to Tamien Nation, Chairwomen Quirina Luna Geary*. September 13, 2022.

2) A resource determined by the lead agency, in its discretion and supported by substantial evidence, to be significant pursuant to criteria set forth in subdivision (c) of Public Resources Code Section 5024.1? In applying the criteria set forth in subdivision (c) of Public Resources Code Section 5024.1, the lead agency shall consider the significance of the resource to a California Native American tribe.	☐	☒	☐	☐

Impact TCR-1:	The project would not cause a substantial adverse change in the significance of a tribal cultural resource that is listed or eligible for listing in the California Register of Historical Resources, or in a local register of historical resources as defined in Public Resources Code Section 5020.1(k). **(Less than Significant Impact with Mitigation Incorporated)**

Assembly Bill 52 requires lead agencies to complete formal consultations with California Native American tribes during the CEQA process to identify tribal cultural resources that may be subject to significant impacts by a project. Where a project may have a significant impact on a tribal cultural resource, the lead agency's environmental document must discuss the impact and whether feasible alternatives or mitigation measures could avoid or substantially lessen the impact. This consultation requirement applies only if the tribes have sent written requests for notification of projects to the Lead Agency. On June 14, 2021, Tamien Nation sent a written request for notification of projects citywide to the City of Milpitas. The City of Milpitas notified Tamien Nation of the project on March 1, 2022, per the representative's request. On May 4, 2022, the City met with Tamien Nation Chairwoman Quirina Geary and concluded consultation on September 13, 2022. The project site is considered to have a high sensitivity for unknown tribal cultural resources. Therefore, as described in Section 4.5 Cultural Resources, the project will be required to have a Tribal Monitor present during ground disturbing activities (MM CUL-2.1). In addition, the project would implement MM CUL-2.2 and MM CUL-3.1 under Impact CUL-2 and Impact CUL-3 in Section 4.5 Cultural Resources to reduce the potential for adverse impacts to buried cultural resources (including TCRs) to a less than significant level.

Impact TCR-2:	The project would not cause a substantial adverse change in the significance of a tribal cultural resource that is determined by the lead agency, in its discretion and supported by substantial evidence, to be significant pursuant to criteria set forth in subdivision (c) of Public Resources Code Section 5024.1. **(Less than Significant Impact with Mitigation Incorporated)**

Refer to the discussion above under Impact TCR-1. As described in Section 4.5 Cultural Resources, the project will be required to have a Tribal Monitor present during ground disturbing activities (MM CUL-2.1). In addition, the project would implement MM CUL-2.2 and MM CUL-3.1 under Impact CUL-2 and Impact CUL-3 in Section 4.5 Cultural Resources to reduce the potential for adverse impacts to buried cultural resources (including TCRs) to a less than significant level.

4.19 UTILITIES AND SERVICE SYSTEMS

4.19.1 Environmental Setting

4.19.1.1 *Regulatory Framework*

State

State Water Code

Pursuant to the State Water Code, water suppliers providing water for municipal purposes to more than 3,000 customers or supplying more than 3,000 acre-feet (approximately 980 million gallons) of water annually must prepare and adopt an urban water management plan (UWMP) and update it every five years. As part of a UWMP, water agencies are required to evaluate and describe their water resource supplies and projected needs over a 20-year planning horizon, water conservation, water service reliability, water recycling, opportunities for water transfers, and contingency plans for drought events. The City of Milpitas adopted its most recent UWMP in June 2021.

Assembly Bill 939

The California Integrated Waste Management Act of 1989, or AB 939, established the Integrated Waste Management Board, required the implementation of integrated waste management plans, and mandated that local jurisdictions divert at least 50 percent of solid waste generated (from 1990 levels), beginning January 1, 2000, and divert at least 75 percent by 2010. Projects that would have an adverse effect on waste diversion goals are required to include waste diversion mitigation measures.

Assembly Bill 341

AB 341 sets forth the requirements of the statewide mandatory commercial recycling program. Businesses that generate four or more cubic yards of garbage per week and multi-family dwellings with five or more units in California are required to recycle. AB 341 sets a statewide goal for 75 percent disposal reduction by the year 2020.

Senate Bill 1383

SB 1383 establishes targets to achieve a 50 percent reduction in the level of the statewide disposal of organic waste from the 2014 level by 2020 and a 75 percent reduction by 2025. The bill grants CalRecycle the regulatory authority required to achieve the organic waste disposal reduction targets and establishes an additional target that at least 20 percent of currently disposed edible food is recovered for human consumption by 2025.

California Green Building Standards Code

CalGreen establishes mandatory green building standards for all buildings in California. The code is updated every three years.[103] CalGreen covers five categories: planning and design, energy

[103] California Building Standards Commission. "California Building Standards Code." Accessed February 6, 2024. https://www.dgs.ca.gov/BSC/Codes#@ViewBag.JumpTo.

efficiency, water efficiency and conservation, material conservation and resources efficiency, and indoor environmental quality. These standards include the following mandatory set of measures, as well as more rigorous voluntary guidelines, for new construction projects to achieve specific green building performance levels:

- Reducing indoor water use by 20 percent;
- Reducing wastewater by 20 percent;
- Recycling and/or salvaging 65 percent of nonhazardous construction and demolition debris; and
- Providing readily accessible areas for recycling by occupants.

Local

City of Milpitas General Plan 2040

The following policies in the City's General Plan have been adopted for the purpose of reducing or avoiding impacts related to utilities and service systems and are applicable to the project.

Policies	Description
Policy UCS 4-2	Require all development projects to demonstrate how storm water runoff will be detained or retained on-site and/or conveyed to the nearest drainage facility as part of the development review process and as required by the San Francisco Bay Region Municipal Regional Stormwater National Pollutant Discharge Elimination System (NPDES) Permit.
Policy UCS 4-3	Require all future development projects to analyze their drainage and stormwater conveyance impacts and either demonstrate that the City's existing infrastructure can accommodate increased stormwater flows, or make the necessary improvements to mitigate all potential impacts.
Policy UCS 4-4	Applicable projects shall incorporate Best Management Practices (BMPs) and Low Impact Development measures (LID) to treat stormwater before discharge from the site. The facilities shall be sized to meet regulatory requirements.
Policy UCS 4-5	Applicable projects shall control peak flows and duration of runoff to prevent accelerated erosion of downstream watercourses.
Policy UCS 4-8	Coordinate directly with the Santa Clara Valley Water District to incorporate recreational trails and parkway vegetation design into open stormwater facilities and creek corridors to the greatest extent feasible.
Policy UCS 4-10	Where feasible, conform developments to natural landforms, avoid excessive grading and disturbance of vegetation and soils, retain native vegetation and trees, and maintain natural drainage patterns
Policy UCS 4-12	Projects accommodating outdoor activities, including work areas, storage areas or other areas that are potential sources of stormwater pollutants, shall incorporate measures to control those pollutant sources to the maximum extent practicable.

Policies	Description
Policy UCS 4-14	Construction sites shall incorporate measures to control erosion, sedimentation, and the generation of runoff pollutants to the maximum extent practicable. The design, scope and location of grading and related activities shall be designed to cause minimum disturbance to terrain and natural features. (Title II, Chapter 13 of the Municipal Code).
Policy UCS 4-15	Minimize the use of pesticides that may affect water quality.
Policy UCS 5-2	Implement and enforce the provisions of the City's Source Reduction and Recycling Program and update the program as necessary to meet or exceed the State waste diversion requirements.
Policy UCS 5-3	Reduce municipal waste generation by increasing recycling, on-site composting, and mulching, where feasible, at municipal facilities, as well as using resource efficient landscaping techniques in new or renovated medians and parks.

City of Milpitas Metro Specific Plan

The MMSP adopted the following policies for the purpose of avoiding or mitigating impacts to utilities and service systems resulting from planned development within the MMSP area, including the following:

Policies	Description
Policy ICS 3.1	Provide water supply for the Milpitas Metro Area from the City's portfolio of water supplies, including potable water from Valley Water District and San Francisco Public Utilities and groundwater and recycled water from South Bay Water Recycling, per the Water Master Plan. No development is entitled to municipal water until a building permit is issued by the City. Policy ICS 3.10.
Policy ICS 3.6	Require that recycled water be used for all irrigation, including parks, plazas, community facilities, linear parks, landscaped front yards, buffer zones, vegetated setbacks, and private common areas. Policy ICS 3.7. Require, where reasonable and feasible, that commercial uses, schools, and non-residential mixed-use developments include dual plumbing to enable indoor recycled water use for nonpotable uses to the extent feasible.
Policy ICS 3.7	Require, where reasonable and feasible, that commercial uses, schools, and non-residential mixed-use developments include dual plumbing to enable indoor recycled water use for nonpotable uses to the extent feasible.
Policy ICS 3.10	Recycled water mains shall be installed up to and across the frontage of parcels that do not have access to recycled water. The cost of extending recycled water mains, excluding the length across the frontage, shall be funded through the TADIF.
Policy CB 7.6	Building construction and operations shall incorporate measures to screen waste areas from view, reduce waste generation and maximize waste diversion from landfills and reuse.
Policy CB 7.6.2	All construction and demolition projects shall achieve a 75 percent diversion waste rate.

Policies	Description
Policy CB 7.6.3	Organic Waste Collection for Residential. All multifamily residential buildings shall provide organic waste collection services for tenants and employees.
Policy CB 7.6.4	All nonresidential buildings shall provide collection containers for organic waste and recyclables in all areas where disposal containers are provided, except in restrooms.

City of Milpitas Storm Drain Master Plan

The City's 2021 Storm Drain Master Plan identifies the capital improvements needed to maintain recommended levels of protection against storm water runoff, and the need for a revenue stream that would allow the necessary capital improvements to be made, and the storm drain system kept in working order into the future. The Master Plan contains drainage standards, summarizes the major drainage facilities in the area, evaluates the storm drain collection system and pump stations, analyzes storm drain impacts from new development, identifies capital improvements, outlines the operations, maintenance, and replacement methods, and identifies funding requirements.

Green Stormwater Infrastructure Plan

The City adopted the Green Stormwater Infrastructure Plan (GSI Plan) on November 3, 2019 per the requirements of MRP Order R2-2015-0049 to create a long range plan for integrating LID measures into private development and City capital projects. The GSI Plan would be coordinated with the implementation of the Milpitas General Plan.[104]

4.19.1.2 *Existing Conditions*

Water Service and Supply

Water service is provided by the City of Milpitas through its municipal water system. The City purchases domestic water from two water suppliers, the San Francisco Public Utilities Commission (SFPUC) and Valley Water. In 2019, approximately 60 percent of the City's total water was from SFPUC and 30 percent from Valley Water. The remaining 10 percent of water was from recycled water supplies discussed below. The City's agreement with SFPUC provides the City with the right to purchase up to 9.23 million gallons per day (mgd) of treated potable water unless SFPUC has a water shortage. In 2019, the SFPUC supplied 6,146 acre-feet of water to the City of Milpitas.[105]

The City has a three-year contracted delivery schedule with Valley Water. In 2019, the City water supplies totaled 3,182 acre-feet water delivery. The City's monthly "supply guarantee" is at least 15 percent of the annual schedule for that year, meaning that in any month, the City can purchase up to 15 percent of the year's total delivery schedule water.

Using the water demand rate for a "General Office Building", the water demand of the 41,307 square foot existing office development is approximately 11,841,396 gallons of water per year.[106]

[104] City of Milpitas. *Green Stormwater Infrastructure Plan*. November 2019.
[105] City of Milpitas. *The City of Milpitas 2020 Urban Water Management Plan*. July 1, 2021.
[106] California Emissions Estimator Model (CalEEMod). Table 9.1 Water Use Rates. Version 2020.4.0.

Recycled Water

Recycled Water services are provided to the City by South Bay Water Recycling Program. Recycled water is produced at the San José-Santa Clara Regional Wastewater Facility (Facility) and delivered to the City via SWBR's recycled water system. In 2019, the City used approximately 1,049 acre-feet of recycled water for irrigation and industrial uses.[107] This represents approximately 10 percent of the City's total water use in 2019.

Sanitary Sewer/Wastewater Treatment

The City of Milpitas collects, but does not treat, wastewater within the service area. Wastewater from the City is treated at the Facility. The Facility treats an average of 110 mgd. The City's total contracted peak week flow capacity at the plant is 14.25 mgd.[108]

Storm Drainage

Stormwater runoff is collected in a system of storm drain pipelines ranging from three-inches to 96-inches in diameter with outfalls and pumping stations along the City's major waterways that ultimately drain to the San Francisco Bay. Milpitas owns and operates 13 storm water pumping stations, but Valley Water manages most of the natural and urbanized waterways into which the City discharges stormwater.[109]

Solid Waste

Republic Services (formerly Allied Waste) provides solid waste and recycling collection services for the City of Milpitas. Waste from the City is hauled to the Newby Island Sanitary Landfill (NISL). The estimated closure date for NISL is 2041.[110] The City has an annual disposal allocation for 395,000 tons per year. As of April 2021, NISL had approximately 13.7 million cubic yards of capacity remaining.[111]

4.19.2 Impact Discussion

	Potentially Significant Impact	Less than Significant with Mitigation Incorporated	Less than Significant Impact	No Impact
Would the project:				
1) Require or result in the relocation or construction of new or expanded water, wastewater treatment or stormwater drainage, electric power, natural gas, or telecommunications facilities, the construction or relocation of which could cause significant environmental effects?	☐	☐	☒	☐

[107] City of Milpitas. *The City of Milpitas 2020 Urban Water Management Plan*. July 1, 2021.
[108] City of Milpitas. *Milpitas General Plan Final Environmental Impact Report*. January 2020. SCH 2020070348.
[109] Ibid.
[110] Ibid.
[111] North, Daniel. General Manager, Republic Services. Personal Communication. April 9, 2021.

	Potentially Significant Impact	Less than Significant with Mitigation Incorporated	Less than Significant Impact	No Impact
Would the project:				
2) Have insufficient water supplies available to serve the project and reasonably foreseeable future development during normal, dry and multiple dry years?	☐	☐	☐	☒
3) Result in a determination by the wastewater treatment provider which serves or may serve the project that it does not have adequate capacity to serve the project's projected demand in addition to the provider's existing commitments?	☐	☐	☐	☒
4) Generate solid waste in excess of state or local standards, or in excess of the capacity of local infrastructure, or otherwise impair the attainment of solid waste reduction goals?	☐	☐	☒	☐
5) Be noncompliant with federal, state, or local management and reduction statutes and regulations related to solid waste?	☐	☐	☒	☐

Impact UTL-1: The project would not require or result in the relocation or construction of new or expanded water, wastewater treatment or stormwater drainage, electric power, natural gas, or telecommunications facilities, the construction or relocation of which could cause significant environmental effects. **(Less than Significant Impact)**

Water

Operation of the bridge and roadway connections would have no demand for potable water. The project would extend new utility lines to improve the interconnectivity of the City's water network, including potable water and recycled water lines, across Penitencia East Channel. The potable water and recycled water utility pipes would be constructed on the downstream side or western face of the bridge across the Penitencia East Channel to minimize potential utility pipe impacts as a result of flood debris during a flooding event. Therefore, the project would not result in significant environmental effects due to construction or relocation of water utilities.

Sanitary Sewer/Wastewater Treatment

The project does not include a component that would generate wastewater. Therefore, the project would have no impact on wastewater treatment facilities.

Storm Drainage Facilities

The project would replace more than 10,000 square feet of impervious surface at the project site; therefore, it would be subject to Provision C.3 of the MRP. This requires the project to incorporate

site design, source control and runoff treatment controls to reduce the rate, volume, and pollutant load of runoff from the project site. The project would install bioswale basins to treat stormwater associated with the roads behind the flow line of the gutter. The project's stormwater treatment system would reduce the rate of stormwater runoff entering the City's storm drainage system. As discussed in Section 4.10 Hydrology and Water Quality, compliance with Provision C.3 of the MRP, Construction General Permit, and General Plan Policies UCS 4-2, UCS 4-3, and UCS 4-4, the project would improve the quality of stormwater runoff leaving the sites and entering the City's storm drainage system. Therefore, implementation of the proposed project would have a less than significant impact on the City's storm drainage system such that no new or expanded facilities would be required.

Electric Power, Natural Gas, & Telecommunication Facilities

The construction and operation of the bridge would not require the construction or expansion of electric power, natural gas, or telecommunications facilities. Future utility openings would be built into the bridge platform to provide future connections for dry utility services. Construction of the future connections would occur at the time future projects would be constructed and would be assessed by the project-level environmental review completed for each project. Therefore, implementation of the proposed project would not, by itself cause a significant environmental impact.

As discussed above, the project would not result in significant impacts from construction or relocation of new or expanded utilities.

Impact UTL-2:	The project would not have insufficient water supplies available to serve the project and reasonably foreseeable future development during normal, dry and multiple dry years. **(No Impact)**

The project would construct a bridge over Penitencia East Channel, connecting South Milpitas Boulevard on the north side of the channel with Tarob Court and Sango Court on the south side of the channel. The project would not require the provision of water supplies. As discussed above in Impact UTL-1, the new utility lines would increase the service area of the recycled water network and improve the redundancy and resilience of the water network for continued service delivery in case of water line disruptions. Therefore, the proposed project would not impact water supplies and no impact would occur.

Impact UTL-3:	The project would not result in a determination by the wastewater treatment provider which serves or may serve the project that it does not have adequate capacity to serve the project's projected demand in addition to the provider's existing commitments. **(No Impact)**

The project would construct a bridge and roadway connections. The project would not require the treatment of wastewater and there would be no impact on wastewater treatment facilities.

Impact UTL-4:	The project would not generate solid waste in excess of state or local standards, or in excess of the capacity of local infrastructure, or otherwise impair the attainment of solid waste reduction goals. **(Less than Significant Impact)**

Demolition of the existing office building and construction of the project would generate waste during construction activities. Construction waste would be recycled in compliance with the City's Municipal Code Chapter 200 and Demolition Recycling Report Process.[112] As discussed in Section 4.9 Hazards and Hazardous Materials, the project site has been the subject of remediation activities due to soil and groundwater contamination (VOC, TCE, and DCE). In the event that contaminated soils are encountered during ground disturbing activities, MM HAZ-2.1 would require that contaminated soils be removed and disposed of properly at a landfill that meets acceptance criteria for the type of waste being disposed.

For these reasons, the project would not generate solid waste in excess of state or local standards, or in excess of the capacity of local infrastructure, or otherwise impair the attainment of solid waste reduction goals. Impacts would be less than significant.

Impact UTL-5:	The project would not be noncompliant with federal, state, or local management and reduction statutes and regulations related to solid waste. **(Less than Significant Impact)**

As described in UTL-4, the construction waste would be recycled in compliance with the City's Municipal Code Chapter 200 and Demolition Recycling Report Process ensuring that at least 65 percent of the waste is recovered and diverted from landfills. During operation, the project would not generate solid waste. Therefore, the project would have a less than significant impact on solid waste reduction regulations.

[112] City of Milpitas. *Demolition Recycling Report Process.* August 29, 2022. Accessed January 10, 2024. https://www.milpitas.gov/DocumentCenter/View/232/Demolition-Recycling-Report-Process-PDF?bidId=.

4.20 WILDFIRE

4.20.1 Environmental Setting

4.20.1.1 *Regulatory Framework*

State

Fire Hazard Severity Zones

CAL FIRE is required by law to map areas of significant fire hazards based on fuels, terrain, weather, and other relevant factors. Referred to as Fire Hazard Severity Zones (FHSZs), these maps influence how people construct buildings and protect property to reduce risk associated with wildland fires. FHSZs are divided into areas where the state has financial responsibility for wildland fire protection, known as state responsibility areas (SRAs), and areas where local governments have financial responsibility for wildland fire protection, known as local responsibility areas (LRAs). Homeowners living in an SRA are responsible for ensuring that their property is in compliance with California's building and fire codes. Only lands zoned for very high fire hazard are identified within LRAs.

Local

City of Milpitas Municipal Code

Chapter 300 of the City's Municipal Code includes the adoption of the 2022 California Fire Code and the adoption of additional amendments. Chapter 300 requires compliance with the California Fire Code. The California Fire Code regulates and governs the safeguarding of life and property from fire and explosion hazards arising from the storage, handling and use of hazardous substances, materials and devices, and from conditions hazardous to life or property in the occupancy of buildings and premises in the City of Milpitas.

4.20.1.2 *Existing Conditions*

The project site is not located in or near state responsibility areas or lands classified as very high fire hazard severity zones.[113]

4.20.2 Impact Discussion

	Potentially Significant Impact	Less than Significant with Mitigation Incorporated	Less than Significant Impact	No Impact
If located in or near state responsibility areas or lands classified as very high fire hazard severity zones, would the project:				
1) Substantially impair an adopted emergency response plan or emergency evacuation plan?	☐	☐	☐	☒

[113] City of Milpitas. *Milpitas General Plan Final Environmental Impact Report*. January 2020. SCH 2020070348. Figure 3.8-1.

	Potentially Significant Impact	Less than Significant with Mitigation Incorporated	Less than Significant Impact	No Impact
If located in or near state responsibility areas or lands classified as very high fire hazard severity zones, would the project:				
2) Due to slope, prevailing winds, and other factors, exacerbate wildfire risks, and thereby expose project occupants to pollutant concentrations from a wildfire or the uncontrolled spread of a wildfire?	☐	☐	☐	☒
3) Require the installation or maintenance of associated infrastructure (such as roads, fuel breaks, emergency water sources, power lines, or other utilities) that may exacerbate fire risk or that may result in temporary or ongoing impacts to the environment?	☐	☐	☐	☒
4) Expose people or structures to significant risks, including downslope or downstream flooding or landslides, as a result of runoff, post-fire slope instability, or drainage changes?	☐	☐	☐	☒

The project site is not located in or near state responsibility areas or lands classified as very high fire hazard severity zones; therefore, the project would not result in wildfire impacts.[114] **(No Impact)**

[114] City of Milpitas. *Milpitas General Plan Final Environmental Impact Report*. January 2020. SCH 2020070348. Figure 3.8-1.

4.21 MANDATORY FINDINGS OF SIGNIFICANCE

	Potentially Significant Impact	Less than Significant with Mitigation Incorporated	Less than Significant Impact	No Impact
1) Does the project have the potential to substantially degrade the quality of the environment, substantially reduce the habitat of a fish or wildlife species, cause a fish or wildlife population to drop below self-sustaining levels, threaten to eliminate a plant or animal community, substantially reduce the number or restrict the range of a rare or endangered plant or animal, or eliminate important examples of the major periods of California history or prehistory?	☐	☒	☐	☐
2) Does the project have impacts that are individually limited, but cumulatively considerable? ("Cumulatively considerable" means that the incremental effects of a project are considerable when viewed in connection with the effects of past projects, the effects of other current projects, and the effects of probable future projects.)	☐	☒	☐	☐
3) Does the project have environmental effects which will cause substantial adverse effects on human beings, either directly or indirectly?	☐	☒	☐	☐

Impact MFS-1: The project does not have the potential to substantially degrade the quality of the environment, substantially reduce the habitat of a fish or wildlife species, cause a fish or wildlife population to drop below self-sustaining levels, threaten to eliminate a plant or animal community, substantially reduce the number or restrict the range of a rare or endangered plant or animal, or eliminate important examples of the major periods of California history or prehistory. **(Less than Significant Impact with Mitigation Incorporated)**

As discussed in prior sections of this Initial Study, the proposed project would not significantly degrade the quality of the environment, substantially affect biological resources, or eliminate important examples of California history or prehistory with implementation of the mitigation measures identified throughout this document.

As discussed in Section 4.3 Air Quality, implementation of MM AIR-3.1 and MM AIR-3.2 would reduce potentially significant impacts from fugitive dust and toxic air contaminants to a less than significant level.

Implementation of MM BIO-1.4 through MM BIO-1.5 (refer to Section 4.3 Biological Resources) would reduce the potentially significant impacts of bridge illumination on fish and wildlife species to a less than significant level. Implementation of MM BIO-1.6 would ensure that no taking of nesting birds and raptors, including fertile bird eggs, occurs during construction. Implementation of MM BIO-2.1 through MM BIO-2.4 would reduce potentially significant effects from construction on the existing riparian habitat to a less than significant level by ensuring that construction work within the stream banks would be confined to the period of April 15 to October 15; work areas would be delineated and flagged during construction activities; and temporary impact areas would be revegetated and restored to preconstruction conditions and monitored for a period of three years.

As discussed in Section 4.5 Cultural Resources, implementation of MM CUL-2.1, MM CUL-2.2, and MM CUL-3.1 would reduce potentially significant impacts on undiscovered subsurface archaeological resources (Impact CUL-2), tribal cultural resources (Impact TCR-1 and -2), and human remains (Impact CUL-3) (if encountered during construction) to a less than significant level. Similarly, implementation of MM GEO-1.1 (refer to Section 4.7 Geology and Soils) would reduce potentially significant impacts on undiscovered subsurface paleontological resources (if encountered during construction) to a less than significant level. Implementation of MM HAZ-2.1 (refer to Section 4.9 Hazards and Hazardous Materials) would reduce potentially significant impacts from soil and groundwater contamination to a less than significant level.

Based on the above, with the implementation of mitigation measures, the project would not substantially degrade the quality of the environment, substantially reduce the habitat of a fish or wildlife species, cause a fish or wildlife population to drop below self-sustaining levels, threaten to eliminate a plant or animal community, substantially reduce the number or restrict the range of a rare or endangered plant or animal, or eliminate important examples of the major periods of California history or prehistory. All significant project-level impacts can be mitigated to a less than significant level.

Impact MFS-2:	The project does not have impacts that are individually limited, but cumulatively considerable. **(Less than Significant Impact with Mitigation Incorporated)**

Under Section 15065(a)(3) of the CEQA Guidelines, a lead agency shall find that a project may have a significant effect on the environment where there is substantial evidence that the project has potential environmental effects “that are individually limited, but cumulatively considerable.” As defined in Section 15065(a)(3) of the CEQA Guidelines, cumulatively considerable means “that the incremental effects of an individual project are significant when viewed in connection with the effects of past projects, the effects of other current projects, and the effects of probable future projects.” In addition, under Section 15152(f) of the CEQA Guidelines, where a lead agency has determined that a cumulative effect has been adequately addressed in a prior EIR, the effect is not treated as significant for purposes of later environmental review and need not be discussed in detail.

The project would not impact agricultural, forestry, or mineral resources; therefore, the project would have no contribution to cumulative impacts to these resources. Nor would the project contribute to

any cumulative impacts associated with wildfire risk, as the project site is not located in or near a state responsibility area or lands classified as very high fire hazard severity zones.

The project would result in less than significant impacts to aesthetics, hydrology and water quality, land use and planning, noise and vibration, population and housing, public services, recreation, and utilities and service systems. As noted in Section 4.17 Transportation, the project would reduce both daily VMT and daily vehicle hours traveled and, therefore, would not contribute to cumulative VMT impacts. Furthermore, potential impacts associated with these resource areas are accounted for in the EIRs prepared for the Milpitas General Plan 2040, TASP and MMSP.

The proposed project would result in highly localized and temporary air quality, biological, cultural, geology and soils, and hazards and hazardous material impacts during construction. As discussed under Impact MFS-1, these impacts would be less than significant with mitigation incorporated. Furthermore, the area surrounding the project is fully developed, and no other projects are anticipated to be constructed within the project vicinity at the same time as the proposed project that in combination with the proposed project would result in a cumulative impact. Additionally, future projects would undergo environmental review in accordance with CEQA, and held to the same state and federal standards protecting the exposure of sensitive receptors to TACs and $PM_{2.5}$ (BAAQMD 2017 CAP, CEQA Guidelines) or contaminated soil (Toxic Substances Control Act, CalARP); fish, wildlife, nesting birds, and associated habitats including riparian (California Fish and Game Code, CDFW and USACE regulations, Migratory Bird Treaty Act); undiscovered subsurface archaeological and tribal cultural resources (National Historic Preservation Act, California Native American Historical, Cultural, and Sacred Sites Act, Assembly Bill 52) fossils (Public Resources Code Section 5097.5), and human remains (Public Resources Code Sections 5097 and 5097.98). Future projects would also be subject to the policies and actions identified in the City's General Plan, Municipal Code, and MMSP designed to protect the environment as relates to air quality, biological, cultural and tribal cultural resources, geology and soils, and hazards and hazardous materials. For these reasons, with implementation of the mitigation measures identified in this Initial Study, construction-level impacts would be mitigated to a less than significant level and would not be considered cumulatively considerable.

Lastly, illumination of the proposed bridge would have a less than significant impact on fish and wildlife present in the vicinity of the bridge location with implementation of the shielding and spillover light reduction measures outlined in MM BIO-1.4 and MM BIO-1.5. As previously noted, the surrounding area is fully developed, and future redevelopment occurring in the project vicinity is not anticipated to substantially increase the exposure of fish and wildlife species to nighttime lighting in comparison with existing conditions. Further, any future redevelopment would be subject to CDFW and USACE regulations protecting these species from nighttime light exposure. Accordingly, with implementation of MM BIO-1.4 and MM BIO-1.5 identified in this Initial Study, operation-level impacts would be mitigated to a less than significant level and would not be considered cumulatively considerable.

Because criteria air pollutant and GHG emissions would contribute to regional and global emissions of such pollutants, the identified thresholds developed by BAAQMD and used by the City of Milpitas were developed such that a project-level impact would also be a cumulative impact. As discussed in Section 4.3 Air Quality and Section 4.8 Greenhouse Gas Emissions, the project would

not result in significant criteria air pollutants or GHG emissions; therefore, the project would not make a cumulatively considerable contribution to cumulative air quality or GHG emissions impacts. The discussion of project criteria pollutant impacts presented in Section 4.3 also reflects cumulative conditions, and the project would not contribute to significant cumulative impacts. The project's contribution to cumulative climate change impacts was presented in Section 4.8 as less than cumulatively considerable. The discussion of the project's energy impact also reflects cumulative conditions, since the project's consumption of electricity, natural gas, and gasoline would decrease in comparison with the existing development, and therefore the availability of energy supplies at the state and county level would be unaffected. For these reasons, the proposed project would not make a cumulatively considerable contribution to cumulative air quality, energy, or GHG emissions impacts.

The project's cumulative community health risk impacts are a combination of project construction-related emissions, operation-related emissions associated with vehicles traveling along the new roadway connection, and all substantial sources of TACs that can affect sensitive receptors within 1,000 feet of the project site. Figure 4.21-1 shows the existing TAC sources with the potential to affect the off-site MEI.[115]

[115] After completion of the project air quality impact analysis, residences were constructed immediately west of the project site (i.e., Sango Apartments) and are also planned to the south. At the time the dispersion modeling was completed, these receptors were not known. However, these new existing and planned receptors would not be expected to experience more exposure than was identified at the MEI due to the prevailing wind direction in the project area. Source: Reyff, James. Illingworth & Rodkin, Inc. Personal Communication. December 19, 2023.

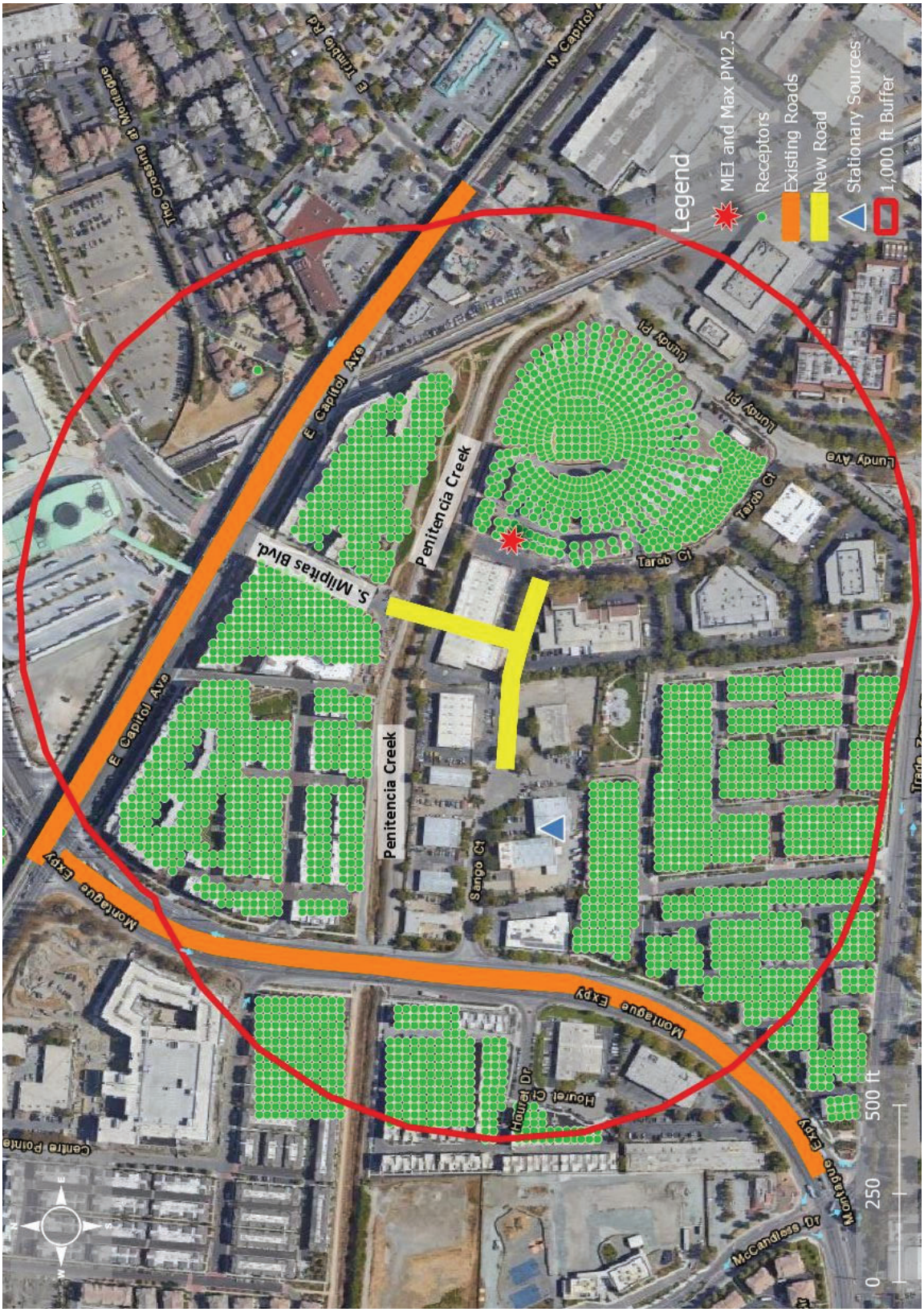

Source: Illingworth & Rodkin, Inc., November 10, 2021.

FIGURE 4.21-1

PROJECT SITE AND NEARBY TAC AND $PM_{2.5}$ SOURCES

Modeling was completed to calculate the community health risk from the cumulative sources at the project MEI. Refer to Appendix **A** for details about the cumulative health risk modeling, including the models used (CT-EMFAC2017, EMFAC, and U.S. EPA AERMOD models), model inputs, and assumptions. Table 4.21-1 reports the cumulative community risk impacts from project construction and operation and other cumulative sources at the MEI.

Table 4.21-1: Cumulative Community Risk Impacts at Off-Site MEI

Source	Cancer Risk (per million)	Annual $PM_{2.5}$ ($\mu g/m^3$)	Hazard Index
Project (Construction and Operation)	8.30 (infant)	0.24	<0.01
Montague Expressway	0.61	0.03	<0.01
E. Capitol Avenue	0.13	<0.01	<0.01
Facility #17576 (Auto Body Coating Operation)	N/A	N/A	<0.01
Cumulative Totals	9.04	0.28	<0.04
BAAQMD Cumulative Source Threshold	*100*	*0.8*	*10.0*
Exceed Cumulative Source Threshold?	No	No	No

Source: Illingworth & Rodkin, Inc. *S. Milpitas Boulevard Vehicular Bridge Air Quality Assessment*. November 10, 2021.

Notes:

Numbers in excess of BAAQMD cumulative source thresholds identified in **bold**.

***** Mitigation Measures AIR-3.1 and AIR-3.2 include BAAQMD recommended fugitive dust and construction equipment controls, use of Tier 4 equipment or equipment with CARB-certified Level 3 Diesel Particulate Filters or equivalent.

As shown in Table 4.21-1 above, with implementation of MM AIR-3.1 and MM AIR-3.2, the project would not exceed either the single-source cancer risk or annual $PM_{2.5}$ concentration thresholds or the cumulative source annual $PM_{2.5}$ threshold. Therefore, the cumulative impact of the project and off-site TAC sources would not be cumulatively considerable.

Given the above discussion, the proposed project would not result in cumulatively considerable contributions to significant cumulative impacts with mitigation incorporated.

Impact MFS-3:	The project does not have environmental effects which will cause substantial adverse effects on human beings, either directly or indirectly. **(Less than Significant Impact with Mitigation Incorporated)**

Consistent with Section 15065(a)(4) of the CEQA Guidelines, a lead agency shall find that a project may have a significant effect on the environment where there is substantial evidence that the project has the potential to cause substantial adverse effects on human beings, either directly or indirectly. Under this standard, a change to the physical environment that might otherwise be minor must be treated as significant if people would be significantly affected. This factor relates to adverse changes to the environment of human beings generally, and not to effects on particular individuals. While changes to the environment that could indirectly affect human beings would be represented by all of the designated CEQA issue areas, those that could directly affect human beings include construction air quality and noise. Implementation of the proposed project's mitigation measures identified in this document and adherence to the City's General Plan, Municipal Code, and MMSP and state and federal regulations described in this Initial Study, would avoid significant and unavoidable impacts. No other direct or indirect adverse effects on human beings have been identified.

SECTION 5.0 REFERENCES

The analysis in this Initial Study is based on the professional judgement and expertise of the environmental specialists preparing this document, based upon review of the site, surrounding conditions, site plans, and the following references:

Association Of Bay Area Governments and Metropolitan Transportation Commission. "Projections 2040: Forecasts for Population, Household and Employment for the Nine County San Francisco Bay Area Region." 2017. Accessed January 10, 2024. http://projections.planbayarea.org/data.

Bay Area Air Quality Management District. *2017 Clean Air Plan.* April 19, 2017.

Bay Area Air Quality Management District. 2022 *California Environmental Quality Act Air Quality Guidelines*. April 2023.

California Air Resources Board. "Overview: Diesel Exhaust and Health." Accessed January 9, 2024. https://ww2.arb.ca.gov/resources/overview-diesel-exhaust-and-health.

California Air Resources Board. "The Advanced Clean Cars Program." Accessed January 9, 2024. https://ww2.arb.ca.gov/our-work/programs/advanced-clean-cars-program.

California Building Standards Commission. "California Building Standards Code." Accessed January 9, 2024. https://www.dgs.ca.gov/BSC/Codes#@ViewBag.JumpTo.

California Department of Transportation. "Scenic Highways." Accessed January 9, 2024. https://dot.ca.gov/programs/design/lap-landscape-architecture-and-community-livability/lap-liv-i-scenic-highways

California Department of Transportation. *California State Scenic Highway Systems Map.* Accessed January 9, 2024. https://caltrans.maps.arcgis.com/apps/webappviewer/index.html?id=465dfd3d807c46cc8e8057116f1aacaa.

California Department of Conservation. *California Important Farmland Finder*. Accessed January 9, 2024. DLRP Important Farmland Finder (ca.gov)

California Department of Conservation. *Santa Clara County Important Farmland 2016 Map*. Accessed January 9, 2024. https://santaclaralafco.org/sites/default/files/scl16.pdf.

California Department of Conservation. "Farmland Mapping and Monitoring Program." Accessed January 9, 2024. http://www.conservation.ca.gov/dlrp/fmmp/Pages/Index.aspx.

California Department of Conservation. "Williamson Act." http://www.conservation.ca.gov/dlrp/lca.

California Department of Forestry and Fire Protection. "Fire and Resource Assessment Program." Accessed January 9, 2024. http://frap.fire.ca.gov/.

California Department of Housing and Community Development. "Regional Housing Needs Allocation and Housing Elements." Accessed January 9, 2024. http://hcd.ca.gov/community-development/housing-element/index.shtml.

California Department of Tax and Fee Administration. "Net Taxable Gasoline Gallons." Accessed January 10, 2024. https://www.cdtfa.ca.gov/dataportal/dataset.htm?url=VehicleTaxableFuelDist.

California Department of Water Resources. "Division of Safety of Dams." Accessed January 9, 2024. https://water.ca.gov/Programs/All-Programs/Division-of-Safety-of-Dams#:~:text=Since%20August%2014%2C%201929%2C%20the,Safety%20of%20Dams%20(DSOD).

California Emissions Estimator Model (CalEEMod). Table 9.1 Water Use Rates. Version 2020.4.0.

California Energy Commission (CEC). "2022 Building Energy Efficiency Standards." Accessed January 9, 2024. https://www.energy.ca.gov/programs-and-topics/programs/building-energy-efficiency-standards/2019-building-energy-efficiency.

California Energy Commission. Energy Consumption Data Management System. "Electricity Consumption by County." January 9, 2024. http://ecdms.energy.ca.gov/elecbycounty.aspx.

California Environmental Protection Agency. "Cortese List Data Resources." Accessed January 9, 2024. https://calepa.ca.gov/sitecleanup/corteselist/.

CAL FIRE. *Fire Hazard Severity Zone Viewer*. Accessed January 9, 2024. https://egis.fire.ca.gov/FHSZ/

California Gas and Electric Utilities. 2019 *California Gas Report.* January 9, 2024. https://www.socalgas.com/regulatory/documents/cgr/2019_CGR_Supplement_7-1-19.pdf.

California Geological Survey. *Earthquake Zones of Required Investigation*. January 9, 2024. https://maps.conservation.ca.gov/cgs/EQZApp/App/.

California Office of Historic Preservation. *CEQA Guidelines Section 15064.5(a)(3) and California Office of Historic Preservation Technical Assistance Series #6*. January 9, 2024.https://ohp.parks.ca.gov/pages/1069/files/technical%20assistance%20bulletin%206%202011%20update.pdf.

California Office of Planning and Research. "Changes to CEQA for Transit Oriented Development – FAQ." October 14, 2014. Accessed October 13, 2021. https://opr.ca.gov/ceqa/sb-743/.

California Regional Water Quality Control Board. *San Francisco Bay Region Municipal Regional Stormwater NPDES Permit.* November 2015.

California Register of Historic Places. "California Historical Resources". Accessed January 9, 2024. https://ohp.parks.ca.gov/listedresources/

California State Water Resources Control Board. 2*020-2022 California Integrated Report (Clean Water Act Section 303(d) List and 305(b) Report).* May 11, 2022. Accessed February 6, 2023. https://www.waterboards.ca.gov/water_issues/programs/water_quality_assessment/2020_2022_integrated_report.html.

California State Water Resources Control Board. "GeoTracker, 1841 Tarob Court." January 9, 2024. https://geotracker.waterboards.ca.gov/case_summary?global_id=T10000008880.

California State Water Resources Control Board. "GeoTracker, 355 Sango Court." Accessed January 9, 2024. https://geotracker.waterboards.ca.gov/case_summary?global_id=T10000008880.

City of Milpitas. *Demolition Recycling Report Process*. August 29, 2022. Accessed January 10, 2024. https://www.milpitas.gov/DocumentCenter/View/232/Demolition-Recycling-Report-Process-PDF?bidId=.

City of Milpitas. *Milpitas General Plan Final Environmental Impact Report. January 2020. SCH 2020070348.*

City of Milpitas. *General Plan 2040*. March 9, 2021.

City of Milpitas. *Green Stormwater Infrastructure Plan*. November 3, 2019.

City of Milpitas. "Housing Policy & Plans". Accessed January 9, 2024. https://www.milpitas.gov/487/Housing-Policy-Plans.

City of Milpitas. *Polychlorinated Biphenyls (PCBs) Screening Assessment Application Package*. May 2019.

City of Milpitas. *Storm Drain Master Plan*. July 2021.

City of Milpitas. *Streetscape Master Plan*. September 19, 2000.

City of Milpitas. *Milpitas Transit Area Specific Plan*. Adopted June 2008. Amended December 2011.

City of Milpitas. *The City of Milpitas 2020 Urban Water Management Plan*. July 1, 2021.

City of Milpitas. "Parks & Facilities." Accessed January 10, 2024. https://ca-milpitas.civicplus.com/503/Parks-Facilities.

City of Milpitas. “Parks.” Accessed January 10, 2024. https://ca-milpitas.civicplus.com/831/Parks.

County of Santa Clara. *Interactive Map of Williamson Act Properties*. Accessed January 9, 2024. https://sccplanning.maps.arcgis.com/apps/webappviewer/index.html?id=1f39e32b4c0644b0915354c3e59778ce

Federal Emergency Management Agency. *Flood Insurance Rate Map Santa Clara County, California. Map No. 06085C0067J*. February 19, 2014.

Hexagon Transportation Consultants, Inc. *Transportation Analysis for the Penitencia Creek Bridge Project Memorandum*. October 1, 2021.

H.T. Harvey & Associates. *Biological Resources Report.* December 2023.

Illingworth & Rodkin, Inc. S. Milpitas Boulevard Vehicular Bridge Air Quality Assessment. November 10, 2021.

Macrostrat. *Geologic Map*. January 9, 2024. https://macrostrat.org/map/#/z=14.0/x=-121.8809/y=37.4069/bedrock/lines/satellite/fossils/columns/

McCloskey Consultants. *Site Plan-Soil Vapor Sampling Results for 355 Sango Court including 1831 Tarob Court.* Attachment to Kimberlee West Personal Communication. August 18, 2020.

Metropolitan Transportation Commission. “Priority Development Areas (PDAs)” Accessed January 9, 2024. https://mtc.ca.gov/planning/land-use/priority-development-areas-pdas.

MTC GIS Data Catalog. *Priority Development Areas (Plan Bay Area 2050)*. Accessed January 9, 2024. https://opendata.mtc.ca.gov/datasets/4df9cb38d77346a289252ced4ffa0ca0/explore.

Montgomery, Michael. Executive Officer, San Francisco Bay Regional Water Quality Control Board. Personal Communication. March 26, 2020.

Montgomery, Michael. Executive Officer, San Francisco Bay Regional Water Quality Control Board. Personal Communication. August 10, 2020.

National Register of Historic Places. “National Register Database and Research. Accessed January 9, 2024. https://www.nps.gov/subjects/nationalregister/database-research.htm

North, Daniel. General Manager, Republic Services. Personal Communication. April 9, 2021.

Pacific Gas and Electric Company. “Exploring Clean Energy Solutions.” Accessed January 10, 2024. https://www.pge.com/en_US/about-pge/environment/what-we-are-doing/clean-energy-solutions/clean-energy-solutions.page?WT.mc_id=Vanity_cleanenergy.

PaleoWest, LLC. *Archaeological Resources Assessment*. July 28, 2021.

San Francisco Bay Regional Water Quality Control Board. *Municipal Regional Stormwater Permit, Provision C.12*. November 19, 2015.

San Francisco Bay Regional Water Quality Control Board. *No Further Remedial Action Required – former Dynamic Circuits Sites, 1831 Tarob Court, Milpitas, Santa Clara County*. August 10, 2020.

Santa Clara County Airport Land Use Commission. *Comprehensive Land Use Plan Norman Y. Mineta San JOSE International Airport*. November 2016. Figure 8.

Santa Clara County Airport Land Use Commission. *San José International Airport 2022 Aircraft Noise Contours*. Figure 5.

Santa Clara Valley Water District. *2021 Groundwater Management Plan for the Santa Clara and Llagas Subbasins*. November 2021.

Silicon Valley Clean Energy. "Frequently Asked Questions." January 9, 2024. https://www.svcleanenergy.org/faqs.

State of California, Department of Finance. "E-5 Population and Housing Estimates for Cities, Counties, and the State, 2021-2023, with 2020 Benchmark." Accessed January 10, 2024. https://dof.ca.gov/forecasting/demographics/estimates/e-5-population-and-housing-estimates-for-cities-counties-and-the-state-2020-2023/.

United States Department of the Interior. *Memorandum M-37050. The Migratory Bird Treaty Act Does Not Prohibit Incidental Take.* January 9, 2024. https://www.doi.gov/sites/doi.gov/files/uploads/m-37050.pdf.

United States Department of Energy. *Energy Independence & Security Act of 2007.* Accessed January 10, 2024. http://www.afdc.energy.gov/laws/eisa.

United States Department of Transportation. "USDOT Announces New Vehicle Fuel Economy Standards for Model Year 2024-2026." Accessed January 10, 2024. https://www.nhtsa.gov/press-releases/usdot-announces-new-vehicle-fuel-economy-standards-model-year-2024-2026

United States Energy Information Administration. "State Profile and Energy Estimates, 2021." Accessed January 9, 2024. https://www.eia.gov/state/?sid=CA#tabs-2.

U.S. Energy Information Administration. "Petroleum & Other Liquids, California Field Production of Crude Oil." January 10, 2024. https://www.eia.gov/dnav/pet/hist/LeafHandler.ashx?n=pet&s=mcrfpca1&f=a

United States Environmental Protection Agency. "The 2022 EPA Automotive Trends Report: Greenhouse Gas Emissions, Fuel Economy, and Technology since 1975." December 2022.

United States Environmental Protection Agency. "Summary of the Resource Conservation and Recovery Act." Accessed January 9, 2024. https://www.epa.gov/laws-regulations/summary-resource-conservation-and-recovery-act.

United States Environmental Protection Agency. "Superfund: CERCLA Overview." Accessed January 9, 2024. https://www.epa.gov/superfund/superfund-cercla-overview.

United States Environmental Protection Agency. "Learn about Lead". Accessed January 9, 2024. https://www.epa.gov/lead/learn-about-lead

Valley Water. *2021 Groundwater Management Plan, Santa Clara and Llagas Subbasins.* November 2021.

West, Kimberlee. Engineer, San Francisco Bay Regional Water Quality Control Board. Personal Communication. August 13, 2020.

West, Kimberlee. Engineer, San Francisco Bay Regional Water Quality Control Board. Personal Communication. August 18, 2020.

SECTION 6.0 LEAD AGENCY AND CONSULTANTS

6.1 LEAD AGENCY

City of Milpitas

Public Works Department
Michael Silveira – *Public Works Division Manager- Engineering*
Lyhak Eam – *Principal Civil Engineer,*
Michale Runchey, *Assistant Engineer*

Planning Department
Jay Lee, *Planning Director*
Kristina Phung, *Associate Planner*

City Attorney's Office
Michael Mutalipassi, *City Attorney*

6.2 CONSULTANTS

David J. Powers & Associates, Inc.
Environmental Consultants and Planners

Shannon George, *Principal*
Demetri Loukas, Principal
Natalie Noyes, *Senior Project Manager*
Matthew Moore, *Associate Project Manager*
Adam Garcia, *Assistant Project Manager*
Ryan Osako, *Draftsperson/Graphic Artist*

Illingworth & Rodkin, Inc.
Acoustical and Air Quality Consultants

James Reyff, *Principal*
Michael Thill, *Principal*
Casey Divine, *Consultant*
Jay Witt, *Consultant*

H.T. Harvey & Associates
Ecological Consultants

Kelly Hardwicke, Ph.D. – *Principal*
Steve Rottenborn, Ph.D. – *Vice President and Wildlife Ecologist*
Katie Gallagher, MS – *Senior Ecologist*

PaleoWest, LLC

Archaeological Resource Consultant

Garret Root, *Principal and Senior Architectural Historian*

ENGEO Incorporated
Geology and Soils Consultants

Jeanine T. Ruffoni, PE – *Engineer*
Pedro J. Espinosa, GE – *Engineer*
Robert H. Boeche, CEG – *Geologist*

Schaaf & Wheeler
Hydrology and Water Quality Consultants

Caitlin Gilmore, PE, QSD – *Senior Project Manager*
Katie Hogan, PE, CFM – *Senior Engineer*
Emily Straley, PE – *Senior Engineer*

Hexagon Transportation Consultants, Inc.
Transportation Consultants

Brett Walinski, TE – *Principal*
Eric Tse, TE – *Associate*

SECTION 7.0 ACRONYMS AND ABBREVIATIONS

AASHTO	American Association of State Highway and Transportation Officials
AB	Assembly Bill
ABAG	Association of Bay Area Governments
ADA	Americans with Disabilities Act
APN	Assessor's Parcel Number
BART	Bay Area Rapid Transit
BAAQMD	Bay Area Air Quality Management District
BGS	Below Ground Surface
BMP	Best Management Practice
BUSD	Berryessa Union School District
CalARP	California Accidental Release Prevention
CalEPA	California Environmental Protection Agency
CAL FIRE	California Department of Forestry and Fire Protection
Cal/OSHA	California Department of Industrial Relations, Division of Occupational Safety and Health
Caltrans	California Department of Transportation
CAP	Clean Air Plan
CARB	California Air Resources Board
CCR	California Code of Regulations
CDFW	California Department of Fish and Wildlife
CEQA	California Environmental Quality Act
CERCLA	Comprehensive Environmental Response, Compensation, and Liability Act
CFC	Chlorofluorocarbons
CFR	Code of Federal Regulations
CHRIS	California Historical Resources Information System
CMP	Congestion Management Program
CNEL	Community Noise Equivalent Level
CRHR	California Register of Historical Resources
CUPA	Certified Unified Program Agency
dBA	A-weighted decibel
DPM	Diesel Particulate Matter

DPR	Department of Parks and Recreation
DSOD	Division of Safety of Dams
DTSC	Department of Toxic Substances Control
EIR	Environmental Impact Report
EPA	Environmental Protection Agency
ESUHSD	East Side Union High School District
FEIR	Final Environmental Impact Report
FEMA	Federal Emergency Management Agency
FIRM	Flood Insurance Rate Map
FHSZ	Fire Hazard Severity Zone
FTA	Federal Transit Administration
GHG	Greenhouse Gas
GSI	Green Stormwater Infrastructure
GWMP	Groundwater Management Plan
GWP	Global Warming Potential
HFC	Hydrofluorocarbons
HHRA	Human Health Risk Assessment
HSWA	Federal Hazardous and Solid Waste Amendments
HVAC	Heating, Venting, and Air Conditioning
I-	Interstate
LID	Low Impact Development
L_{dn}	Day-Night Level
LOS	Level of Service
LRA	Local Responsibility Area
MBTA	Migratory Bird Treaty Act
MFD	Milpitas Fire Department
MMSP	Milpitas Metro Specific Plan
MND	Mitigated Negative Declaration
MPD	Milpitas Police Department
MUSD	Milpitas Unified School District
MTC	Metropolitan Transportation Commission
MRP	Municipal Regional Stormwater Permit

NFIP	National Flood Insurance Program
NRHP	National Historic Preservation Act
NRHP	National Register of Historic Places
NOD	Notice of Determination
NOI	Notic of Intent
NPDES	National Pollutant Discharge Elimination System
LID	Low Impact Development
OPR	Governor’s Office of Planning and Research
PCB	Polychlorinated Biphenyl
PDA	Priority Development Area
PFC	Perfluorocarbon
PM	Particulate Matter
RCRA	Resource Conservation and Recovery Act
RHNA	Regional Housing Need Allocation
ROG	Reactive Organic Gases
RMP	Risk Management Plan
RWQCB	Regional Water Quality Control Board
SB	Senate Bill
SCCDEH	Santa Clara County Department of Environmental Health
SCS	Sustainable Communities Strategy
SFHA	Special Flood Hazard Area
SFPUC	San Francisco Public Utilities Commission
SMARA	Surface Mining and Reclamation Act
SMGP	State Mining and Geology Board
SR	State Route
SRA	State Responsibility Area
SWMP	Stormwater Management Plan
SWRCB	State Water Resources Control Board
SCVWD	Santa Clara Valley Water District
TASP	Transit Area Specific Plan
TAC	Toxic Air Contaminant
TOD	Transit Oriented Development

TCR	Tribal Cultural Resource
TSCA	Toxic Substances Control Act
TSD	Transportation, Storage and Disposal
USFWS	United States Fish and Wildlife Service
UWMP	Urban Water Management Plan
VdB	Vibration Velocity Decibels
VMT	Vehicle Miles Traveled
VOC	Volatile Organic Compound
VTA	Santa Clara Valley Transportation Authority

APPENDIX A
Air Quality and GHG Assessment by Illingworth & Rodkin, Inc., dated 2021 and 2023

S. MILPITAS BOULEVARD VEHICULAR BRIDGE AIR QUALITY ASSESSMENT

Milpitas, California

November 10, 2021

Prepared for:

Natalie Noyes, AICP
Senior Project Manager
David J. Powers & Associates, Inc.
1736 Franklin St., Suite 300
Oakland, California 94612

Prepared by:

Jay Witt &
James A. Reyff

ILLINGWORTH & RODKIN, INC.
Acoustics • Air Quality
429 E. Cotati Avenue
Cotati, CA 94931
(707) 794-0400

I&R Project: #21-084

Introduction

The purpose of this report is to address air quality and community health risk impacts associated with the proposed construction of a new vehicular bridge over Penitencia Creek at the end of the new S. Milpitas Blvd. Extension with new roadway connections to Tarob Court and Sango Court in the City of Milpitas, California. The air quality impacts from this project would be associated with the preparation of the site, construction of the new bridge and roadways, and traffic using the new local roadway connection. Air pollutants emissions associated with construction and operation of the project were predicted using appropriate computer models. In addition, the potential community risk impact to nearby sensitive receptors from construction-related and existing sources of toxic air contaminants (TACs) was evaluated. The analysis was conducted following guidance provided by the Bay Area Air Quality Management District (BAAQMD).[1]

Project Description

The project proposes to construct an approximately 40 feet long and 48 feet wide bridge across Penitencia East Channel which would connect S. Milpitas Boulevard on the north side of the channel with Tarob Court and Sango Court on the south side of the channel. This project is identified by the City's Metro Specific Plan (formerly Transit Area Specific Plan) as necessary to improve vehicular, bicycle, and pedestrian connectivity in the area, consistent with the TASP's goals and policies. The proposed project would require demolition of the existing vacant office building and associated parking lot, approximately 112,000 square feet (sf) of material, located at 1831-1841 Tarob Court (APN 086-36-030) which is owned by the City of Milpitas.

Setting

The project is in Santa Clara County, which is in the San Francisco Bay Area Air Basin. Ambient air quality standards have been established at both the State and federal level. The Bay Area meets all ambient air quality standards except for ground-level ozone, respirable particulate matter (PM_{10}), and fine particulate matter ($PM_{2.5}$).

Air Pollutants of Concern

High ozone levels are caused by the cumulative emissions of reactive organic gases (ROG) and nitrogen oxides (NO_X). These precursor pollutants react under certain meteorological conditions to form high ozone levels. Controlling the emissions of these precursor pollutants is the focus of the Bay Area's attempts to reduce ozone levels. The highest ozone levels in the Bay Area occur in the eastern and southern inland valleys that are downwind of air pollutant sources. High ozone levels aggravate respiratory and cardiovascular diseases, reduced lung function, and increase coughing and chest discomfort.

Particulate matter is another problematic air pollutant of the Bay Area. Particulate matter is assessed and measured in terms of respirable particulate matter or particles that have a diameter of 10 micrometers or less (PM_{10}) and fine particulate matter where particles have a diameter of 2.5 micrometers or less ($PM_{2.5}$). Elevated concentrations of PM_{10} and $PM_{2.5}$ are the result of both

[1] Bay Area Air Quality Management District, *CEQA Air Quality Guidelines*, May 2017.

region-wide (or cumulative) emissions and localized emissions. High particulate matter levels aggravate respiratory and cardiovascular diseases, reduce lung function, increase mortality (e.g., lung cancer), and result in reduced lung function growth in children.

Toxic Air Contaminants

TACs are a broad class of compounds known to cause morbidity or mortality (usually because they cause cancer). TACs are found in ambient air, especially in urban areas, and are caused by industry, agriculture, fuel combustion, and commercial operations (e.g., dry cleaners). TACs are typically found in low concentrations, even near their source (e.g., diesel particulate matter [DPM] near a freeway or roadways). Because chronic exposure can result in adverse health effects, TACs are regulated at the regional, State, and federal level.

Diesel exhaust is the predominant TAC in urban air and is estimated to represent about three-quarters of the cancer risk from TACs (based on the Bay Area average). According to the California Air Resources Board (CARB), diesel exhaust is a complex mixture of gases, vapors, and fine particles. This complexity makes the evaluation of health effects of diesel exhaust a complicated scientific issue. Some of the chemicals in diesel exhaust, such as benzene and formaldehyde, have been previously identified as TACs by the CARB, and are listed as carcinogens either under the State's Proposition 65 or under the Federal Hazardous Air Pollutants programs. The most recent Office of Environmental Health Hazard Assessment (OEHHA) risk assessment guidelines were published in February of 2015.[2] See *Attachment 1* for a detailed description of the community risk modeling methodology used in this assessment.

Sensitive Receptors

There are groups of people more affected by air pollution than others. CARB has identified the following persons who are most likely to be affected by air pollution: children under 16, the elderly over 65, athletes, and people with cardiovascular and chronic respiratory diseases. These groups are classified as sensitive receptors. Locations that may contain a high concentration of these sensitive population groups include residential areas, hospitals, daycare facilities, elder care facilities, elementary schools, and parks. For cancer risk assessments, children are the most sensitive receptors, since they are more susceptible to cancer causing TACs. Residential locations are assumed to include infants and small children. The closest sensitive receptors to the site are children that may be living in the multi-family housing developments adjacent to the eastside of project site. Additionally, the Crossing Early Care and Learning Center is located approximately 788 feet northeast of the bridge site and the Stratford School is approximately 1,300 feet to the northwest.

[2] OEHHA, 2015. *Air Toxics Hot Spots Program Risk Assessment Guidelines, The Air Toxics Hot Spots Program Guidance Manual for Preparation of Health Risk Assessments*. Office of Environmental Health Hazard Assessment. February.

Regulatory Agencies

Federal Regulations

The United States Environmental Protection Agency (EPA) sets nationwide emission standards for mobile sources, which include on-road (highway) motor vehicles such trucks, buses, and automobiles, and non-road (off-road) vehicles and equipment used in construction, agricultural, industrial, and mining activities (such as bulldozers and loaders). The EPA also sets nationwide fuel standards. California also has the ability to set motor vehicle emission standards and standards for fuel used in California, as long as they are the same or more stringent than the Federal standards.

In the past decade, the EPA has established several emission standards for on- and non-road heavy-duty diesel engines used in trucks and other equipment. This was done in part because diesel engines are a significant source of nitrogen oxides, or NO_X, and particulate matter (PM_{10} and $PM_{2.5}$) and because the EPA has identified diesel particulate matter as a probable carcinogen. Implementation of the heavy-duty diesel on-road vehicle standards and the non-road diesel engine standards are estimated to reduce PM and NO_X emissions from diesel engines up to 95 percent in 2030 when the heavy-duty vehicle fleet is completely replaced with newer heavy-duty vehicles that comply with these emission standards.[3]

In concert with the diesel engine emission standards, the EPA has also substantially reduced the amount of sulfur allowed in diesel fuels. The sulfur contained in diesel fuel is a significant contributor to the formation of particulate matter in diesel-fueled engine exhaust. The new standards reduced the amount of sulfur allowed by 97 percent for highway diesel fuel (from 500 parts per million by weight [ppmw] to 15 ppmw), and by 99 percent for off-highway diesel fuel (from about 3,000 ppmw to 15 ppmw). The low sulfur highway fuel (15 ppmw sulfur), also called ultra-low sulfur diesel (ULSD) is currently required for use by all vehicles in the U.S.

All of the above Federal diesel engine and diesel fuel requirements have been adopted by California, in some cases with modifications making the requirements more stringent or the implementation dates sooner.

State Regulations

To address the issue of diesel emissions in the state, CARB developed the Risk Reduction Plan to Reduce Particulate Matter Emissions from Diesel-Fueled Engines and Vehicles[4]. In addition to requiring more stringent emission standards for new on-road and off-road mobile sources and stationary diesel-fueled engines to reduce particulate matter emissions by 90 percent, a significant component of the plan involves application of emission control strategies to existing diesel vehicles and equipment. Many of the measures of the Diesel Risk Reduction Plan have been

[3] USEPA, 2000. *Regulatory Announcement, Heavy-Duty Engine and Vehicle Standards and Highway Diesel Fuel Sulfur Control Requirements*. EPA420-F-00-057. December.

[4] California Air Resources Board, 2000. *Risk Reduction Plan to Reduce Particulate Matter Emissions from Diesel-Fueled Engines and Vehicles*. October.

approved and adopted, including the Federal on-road and non-road diesel engine emission standards for new engines, as well as adoption of regulations for low sulfur fuel in California.

CARB has adopted and implemented a number of regulations for stationary and mobile sources to reduce emissions of DPM. Several of these regulatory programs affect medium and heavy-duty diesel trucks that represent the bulk of DPM emissions from California highways. CARB regulations require on-road diesel trucks to be retrofitted with particulate matter controls or replaced to meet 2010 or later engine standards that have much lower DPM and $PM_{2.5}$ emissions. This regulation will substantially reduce these emissions between 2013 and 2023. While new trucks and buses will meet strict federal standards, this measure is intended to accelerate the rate at which the fleet either turns over so there are more cleaner vehicles on the road or is retrofitted to meet similar standards. With this regulation, older, more polluting trucks would be removed from the roads sooner.

CARB has also adopted and implemented regulations to reduce DPM and NO_X emissions from in-use (existing) and new off-road heavy-duty diesel vehicles (e.g., loaders, tractors, bulldozers, backhoes, off-highway trucks, etc.). The regulations apply to diesel-powered off-road vehicles with engines 25 horsepower (hp) or greater. The regulations are intended to reduce particulate matter and NO_X exhaust emissions by requiring owners to turn over their fleet (replace older equipment with newer equipment) or retrofit existing equipment in order to achieve specified fleet-averaged emission rates. Implementation of this regulation, in conjunction with stringent Federal off-road equipment engine emission limits for new vehicles, will significantly reduce emissions of DPM and NO_X.

Bay Area Air Quality Management District (BAAQMD)

BAAQMD has jurisdiction over an approximately 5,600-square mile area, commonly referred to as the San Francisco Bay Area (Bay Area). The district's boundary encompasses the nine San Francisco Bay Area counties, including Alameda County, Contra Costa County, Marin County, San Francisco County, San Mateo County, Santa Clara County, Napa County, southwestern Solano County, and southern Sonoma County.

BAAQMD is the lead agency in developing plans to address attainment and maintenance of the National Ambient Air Quality Standards and California Ambient Air Quality Standards. The district also has permit authority over most types of stationary equipment utilized for the proposed project. The BAAQMD is responsible for permitting and inspection of stationary sources; enforcement of regulations, including setting fees, levying fines, and enforcement actions; and ensuring that public nuisances are minimized.

BAAQMD's Community Air Risk Evaluation (CARE) program was initiated in 2004 to evaluate and reduce health risks associated with exposures to outdoor TACs in the Bay Area.[5] The program examines TAC emissions from point sources, area sources, and on-road and off-road mobile sources with an emphasis on diesel exhaust, which is a major contributor to airborne health risk in California. The CARE program is an on-going program that encourages community involvement

[5] See BAAQMD: https://www.baaqmd.gov/community-health/community-health-protection-program/community-air-risk-evaluation-care-program , accessed 2/18/2021.

and input. The technical analysis portion of the CARE program is being implemented in three phases that includes an assessment of the sources of TAC emissions, modeling and measurement programs to estimate concentrations of TAC, and an assessment of exposures and health risks. Throughout the program, information derived from the technical analyses will be used to focus emission reduction measures in areas with high TAC exposures and high density of sensitive populations. Risk reduction activities associated with the CARE program are focused on the most at-risk communities in the Bay Area. Overburdened communities are areas located (i) within a census tract identified by the California Communities Environmental Health Screening Tool (CalEnviroScreen), Version 4.0 implemented by OEHHA, as having an overall CalEnviroScreen score at or above the 70th percentile, or (ii) within 1,000 feet of any such census tract.[6] The BAAQMD has identified six communities as impacted: Concord, Richmond/San Pablo, Western Alameda County, San José, Redwood City/East Palo Alto, and Eastern San Francisco. The project site is not within a CARE area or a BAAQMD overburdened area as identified by CalEnviroScreen.

The BAAQMD *California Environmental Quality Act (CEQA) Air Quality Guidelines*[7] were prepared to assist in the evaluation of air quality impacts of projects and plans proposed within the Bay Area. The guidelines provide recommended procedures for evaluating potential air impacts during the environmental review process consistent with CEQA requirements including thresholds of significance, mitigation measures, and background air quality information. They also include assessment methodologies for air toxics, odors, and greenhouse gas emissions. *Attachment 1* includes detailed community risk modeling methodology.

City of Milpitas General Plan 2040

The *City of Milpitas General Plan 2040* outlines a vision for the long-range physical and economic development of the community through 2040. It includes goals, policies, and actions to reduce exposure of the City's sensitive population to exposure of air pollution, toxic air contaminants, and GHG emissions. The following goals and policies are applicable to the proposed project:

Goals

CIR-1: Provide a transportation system that efficiently, equitably, and effectively supports the City's land use vision, minimizes vehicle miles traveled (VMT), enhances connectivity of the existing network, and supports the use of all modes of transportation.

CIR-6: Support and expand the City's efforts to promote economic, environmental, and social sustainability through initiatives to reduce greenhouse gas emissions and other air pollutants, reduce runoff, promote public health, equity and engage the community in an inclusive planning process.

CON-7: Implement a proactive approach to maintain and improve air quality within Milpitas and the region.

[6] See BAAQMD: https://www.baaqmd.gov/~/media/dotgov/files/rules/reg-2-permits/2021-amendments/documents/20210722_01_appendixd_mapsofoverburdenedcommunities-pdf.pdf?la=en , accessed 10/1/2021.

[7] Bay Area Air Quality Management District, 2011. *CEQA Air Quality Guidelines*. May. (Updated May 2017)

Policies

CIR 1-3: Promote interconnectivity of the transportation network in existing and new developments and actively measure the quality of conditions in neighborhoods to better understand what barriers exist in order to support use of and access to the network.

CIR 1-4: Coordinate development of safe, inclusive, and health-promoting transportation infrastructure with local, county, regional, and state agencies to optimize efficiency of the transportation network for all users and increase opportunities for physical activity for all types of users.

CIR 6-2: Support development of healthier communities through the use of lower- or non-polluting modes of transportation to reduce GHG vehicle emissions and local air pollution levels.

CON 7-1: Ensure that land use and transportation plans support air quality goals through a logical development pattern that focuses growth in and around existing urbanized areas, locates new housing near places of employment, encourages alternative modes of transportation, supports efficient parking strategies, reduces vehicle miles traveled, and requires projects to mitigate significant air quality impacts.

CON 7-2: Minimize exposure of the public to toxic or harmful air emissions and odors through requiring an adequate buffer or setback distance between residential and other sensitive land uses and land uses that typically generate air pollutants, toxic air contaminants, or obnoxious fumes or odors, including but not limited to industrial, manufacturing, and processing facilities, high-volume roadways, and industrial rail lines. New sensitive receptors, such as residences (including residential care and assisted living facilities for the elderly), childcare centers, schools, playgrounds, churches, and medical facilities shall be located away from existing point sources of air pollution such that excessive levels of exposure do not result in unacceptable health risks. Compliance shall be verified through the preparation of a Health Risk Assessment when deemed necessary by the Planning Director.

CON 7-4: Require projects to adhere to the requirements of the Bay Area Air Quality Management District (BAAQMD).

CON 7-5: Use the City's development review process and the California Environmental Quality Act (CEQA) to evaluate and mitigate the local and cumulative effects of new development on air quality.

CON 7-7: Comply with regional, state, and federal standards and programs for control of all airborne pollutants and noxious odors, regardless of source.

CON 7-8: Consider the health risks associated with Toxic Air Contaminants (TACs) when reviewing development applications.

CON 7-11: Encourage improvements and design features that reduce vehicle delay such as bus turnouts, and synchronized traffic signals for new development to reduce excessive vehicle emissions caused by idling.

CON 7-12: Encourage and prioritize infrastructure investments and improvements that promote safe walking, bicycling and increased transit ridership.

Actions

Action CIR-1j: Seek opportunities to eliminate close walking and bicycling network gaps across barriers to mobility, including I-680, I-880, SR 237, and the Union Pacific and BART tracks.

Action CIR-4q: Make improvements to roads, signs, and traffic signals as needed to improve accessible, safe, and convenient bicycle and pedestrian travel.

Action CON-7e: Require dust control measures, including those included in the Santa Clara Valley Non-point Source Pollution Control Program, and BAAQMD's Best Management Practices for fugitive dust control during construction.

Action CON-7f: Use the BAAQMD "Air Quality Guidelines", as amended, or replaced, in identifying thresholds, evaluating the potential project and cumulative impacts, and determining appropriate mitigation measures.

Review development, infrastructure, and planning projects for consistency with BAAQMD requirements during the CEQA review process. Require project applicants to prepare air quality analyses to address BAAQMD, and General Plan requirements, which includes analysis and identification of:

- Air pollutant emissions associated with the project during construction, project operation, and cumulative conditions;
- Potential exposure of sensitive receptors to toxic air contaminants;
- Significant air quality impacts associated with the project for construction, project operation, and cumulative conditions; and
- Mitigation measures to reduce significant impacts to less than significant or the maximum extent feasible where impacts cannot be mitigated to less than significant.

Action CON-7i: Require construction activity plans and grading and drainage plans to include and/or provide for dust management to prevent fugitive dust from leaving the property boundaries and causing a public nuisance or a violation of an ambient air standard. Project applicants, or their assigned agents/contractors, shall be responsible for ensuring that all adequate dust

control measures are implemented in a timely manner during all phases of project grading and construction.

Milpitas Metro Specific Plan (formerly Transit Area Specific Plan)

In early 2019, the city began updating the *Transit Area Specific Plan* (TASP) to enrich the Plan's scope and character of development and to update the goals and strategies to reflect current and future needs for the Plan area. The updated document is called the *Milpitas Metro Specific Plan* (MMSP). The *Milpitas Metro Specific Plan* outlines a vision for the redevelopment of an approximately 437-acre area in the southern portion of the city that currently includes a number of industrial uses near the Great Mall shopping center. The proposed new bridge and roadway connection is within the Plan area.

Section 4.3 of the draft MMSP contains several mobility and circulation goals that are applicable to the proposed project including:

M 1. Multi-Modal Circulation.:	Develop a highly connected street grid that prioritizes multimodal transportation including walking, bicycling, and transit.
M 4. Neighborhood Streets.:	Create local streets within residential neighborhoods with a slower, pedestrian character.
M 5. Trails.:	Develop trails that link into the citywide trail system in order to aid connectivity and provide recreational and leisure spaces.

When completed, the MMSP will be accompanied by a Subsequent Environmental Impact Report (SEIR) to assess and mitigate, as feasible, the impacts of the Plan, of which this project is a part. As noted above, the MMSP would replace the TASP, for which a prior Environmental Impact Report (EIR) was prepared. The SEIR analysis will focus on the potential impacts of the changes to the MMSP and will not reassess the Plan as a whole. Accordingly, the SEIR examines the Plan in the context of the 2007 EIR focusing on the changes to environmental impacts and mitigation that would result from its revisions.

The 2007 TASP EIS identifies the applicable City and air district policies that reduce air quality impacts associate with the project. The EIS determined that the City's General Plan Goals, Policies, and Actions and BAAQMD's CEQA thresholds, emissions control measures, and CEQA guidance were sufficient to control and mitigate the impacts of the TASP and likely the subsequent MMSP. No additional air quality mitigation requirements were provided in the 2007 TASP EIS.

<u>Significance Thresholds</u>

In June 2010, BAAQMD adopted thresholds of significance to assist in the review of projects under the CEQA and these significance thresholds were contained in the district's 2011 *CEQA Air Quality Guidelines*. These thresholds were designed to establish the level at which BAAQMD believed air pollution emissions would cause significant environmental impacts under CEQA. The thresholds were challenged through a series of court challenges and were mostly upheld. BAAQMD updated the *CEQA Air Quality Guidelines* in 2017 to include the latest significance

thresholds, which were used in this analysis and are summarized in Table 1. Impacts above these thresholds are considered potentially significant.

Table 1. BAAQMD CEQA Air Quality Significance Thresholds

Criteria Air Pollutant	Construction Thresholds	Operational Thresholds	
	Average Daily Emissions (lbs./day)	Average Daily Emissions (lbs./day)	Annual Average Emissions (tons/year)
ROG	54	54	10
NO_x	54	54	10
PM_{10}	82 (Exhaust)	82	15
$PM_{2.5}$	54 (Exhaust)	54	10
CO	Not Applicable	9.0 ppm (8-hour average) or 20.0 ppm (1-hour average)	
Fugitive Dust	Construction Dust Ordinance or other Best Management Practices	None	
Health Risks and Hazards	**Single Sources Within 1,000-foot Zone of Influence**	**Combined Sources (Cumulative from all sources within 1000-foot zone of influence)**	
Excess Cancer Risk	10 per one million	100 per one million	
Hazard Index	1.0	10.0	
Incremental annual $PM_{2.5}$	0.3 $\mu g/m^3$	0.8 $\mu g/m^3$	
Greenhouse Gas Emissions			
Land Use Projects – direct and indirect emissions	Compliance with a Qualified GHG Reduction Strategy OR 1,100 metric tons annually or 4.6 metric tons per capita (for 2020) *		

Note: ROG = reactive organic gases, NOx = nitrogen oxides, PM_{10} = course particulate matter or particulates with an aerodynamic diameter of 10 micrometers (µm) or less, $PM_{2.5}$ = fine particulate matter or particulates with an aerodynamic diameter of 2.5µm or less. GHG = greenhouse gases.

*BAAQMD does not have a recommended post-2020 GHG threshold.

AIR QUALITY IMPACTS AND MITIGATION MEASURES

Impact AIR-1: Result in a cumulatively considerable net increase of any criteria pollutant for which the project region is non-attainment under an applicable State or federal ambient air quality standard?

The Bay Area is considered a non-attainment area for ground-level ozone and $PM_{2.5}$ under both the Federal Clean Air Act and the California Clean Air Act. The area is also considered non-attainment for PM_{10} under the California Clean Air Act, but not the federal act. The area has attained both State and federal ambient air quality standards for carbon monoxide. As part of an effort to attain and maintain ambient air quality standards for ozone and PM_{10}, the BAAQMD has established thresholds of significance for these air pollutants and their precursors. These thresholds are for ozone precursor pollutants (ROG and NO_X), PM_{10}, and $PM_{2.5}$ and apply to both construction period and operational period impacts.

<u>Construction Period Emissions</u>

Two emissions models were utilized to estimate construction emissions from the project. The Sacramento Metropolitan Air Quality Management District's Road Construction Emission Model (RCEM) version 9.0 was used to estimate construction emissions from the bridge and roadway components of the project, while the California Emissions Estimator Model (CalEEMod) Version 2020.4.0 was used to estimate emissions from the demolition of the existing office building and associated parking lot.

RCEM Modeling

BAAQMD recommends the use of RCEM to analyze construction emissions for transportation projects. The model provides emission estimates for both on-site and off-site construction activities and uses California Air Resources Board's OFFROAD database to compute emissions from construction equipment use and CARB's EMission FACtors 2017 model (EMFAC2017) on-road motor vehicle emissions estimation model to predict emissions from trucks and worker vehicles. The model predicts emissions of carbon monoxide (CO), ozone precursor pollutants (ROG and NO_X), particulate matter (PM_{10} and $PM_{2.5}$) and greenhouse gases (GHGs) in metric tons of carbon dioxide equivalent (CO_2e).

RCEM models were developed for two project types (bridge and roadway) with four default phases for each project type: Grubbing/Land Clearing (including mobilization), Grading/Excavation, Drainage/Utilities/Sub-Grade, and Paving. Data on the construction start date, durations, equipment, material quantities, etc. were provided by the applicant in September and October 2021.

Construction would begin in June 2023, with bridge construction occurring first, lasting approximately 4 months. The demolition of the existing office building and construction of the new roadway connections would occur after the bridge is substantially complete and take approximately 2 months and 12 months to complete, respectively, for a total project duration of 18 months.

RCEM defaults were used for worker trips and haul trips unless specific information was provided by the applicant. Material haul trip capacity was assumed to be 10 cubic yards (CY) given the size and location of the project. Worker vehicle trip emissions were adjusted to include the Safer Affordable Efficient (SAFE) Vehicle Rule Part One impacts. The SAFE vehicle Rule Part One revoked California's authority to set its own GHG emission standards and set zero emission vehicle mandates in California. As a result of this ruling, criteria pollutant, and CO_2 emissions from construction worker vehicles (i.e., light-duty vehicles) were increased using CARB's SAFE Rule adjustment factors. *Attachment 2* lists all the constructions inputs provided and entered into RCEM. Detailed construction plans were not available at the time of this analysis.

CalEEMod Modeling

CalEEMod computes annual emissions for construction that are based on the project type, size, and acreage. The model provides emission estimates for both on-site and off-site construction activities. On-site activities are primarily made up of construction equipment emissions, while off-site activity includes worker, hauling, and vendor traffic. CalEEMod was used to estimate emissions from the demolition of the approximately 42,000-sf single-story office building that would be removed to make way for the proposed new roadway connection.

The demolition site size (1.06 acre) and anticipated demolition schedule were input to CalEEMod. The demolition scenario, including equipment list and schedule, were based on the information provided by the applicant. The work schedule assumes demolition would start in October 2023, after work on the new bridge is complete, and take approximately 20 workdays and 2 months to complete.[8] Like RCEM, the latest version of CalEEMod uses on-road vehicle emissions factors from EMFAC2017 with SAFE Rule adjustment factors applied. CalEEMod estimated 509 haul trips would be associated with the demolition of the existing general office building, based on the total square footage of both the building and associated parking lot (i.e., 112,000-sf total). The model output from CalEEMod along with demolition inputs are included as *Attachment 2*.

Summary of Computed Construction Period Emissions

Annual emissions were predicted using CalEEMod and the estimated 396 construction workdays spread over two calendar years (2023 and 2024). Average daily emissions were computed by dividing the construction emissions in a given year by the number of construction days in that year. Table 2 shows average daily construction emissions of ROG, NO_X, PM_{10} exhaust, and $PM_{2.5}$ exhaust during construction of the project. As indicated in Table 2, predicted uncontrolled construction period emissions would not exceed the BAAQMD significance thresholds.

[8] CalEEMod default duration for demolition is 20 days.

Table 2. Uncontrolled Construction Period Emissions

Year	Source	ROG	NOx	PM_{10} Exhaust	$PM_{2.5}$ Exhaust
2023	Bridge Construction Emissions (tons)	0.06	0.59	0.03	0.02
	Demolition Emissions (tons)	0.01	0.16	0.01	0.01
	Roadway Construction Emissions (tons)	0.04	0.39	0.02	0.02
	Total (tons)	0.11	1.15	0.05	0.04
	Daily emissions *(pounds per day)*[1]	1.69	17.36	0.75	0.66
	BAAQMD Thresholds (pounds per day)	*54*	*54*	*82*	*54*
	Exceed Threshold?	No	No	No	No
2024	Roadway Construction Emissions (tons)	0.15	1.57	0.07	0.06
	Daily emissions *(pounds per day)*[2]	1.17	11.87	0.54	0.47
	BAAQMD Thresholds (pounds per day)	*54*	*54*	*82*	*54*
	Exceed Threshold?	No	No	No	No
Total/Average	Total Construction (tons)	0.27	2.71	0.12	0.11
	Project average daily emissions (pounds)	1.34	13.70	0.61	0.54
	BAAQMD Thresholds (pounds per day)	*54*	*54*	*82*	*54*
	Exceed Threshold?	No	No	No	No

Notes: [1]Assumes 132 workdays in 2023. [2] Assumes 264 workdays in 2024.

Construction activities, particularly during site preparation and grading, would temporarily generate fugitive dust in the form of PM_{10} and $PM_{2.5}$. Sources of fugitive dust would include disturbed soils at the construction site and trucks carrying uncovered loads of soils. Unless properly controlled, vehicles leaving the site would deposit mud on local streets, which could be an additional source of airborne dust after it dries. The BAAQMD CEQA Air Quality Guidelines consider these impacts to be less than significant if best management practices (BMPs) are implemented to reduce these emissions. *Mitigation Measure AQ-1 would implement BAAQMD's basic and additional best management practices*.

Mitigation Measure AQ-1: Implement BAAQMD-Recommended Basic and Additional Measures to Control Fugitive Dust Emissions during Construction.

Basic and additional dust control BMPs are needed to reduce fugitive dust (i.e., $PM_{2.5}$) emissions from construction and are recommended to and ensure that health impacts to nearby sensitive receptors are minimized. During any construction period ground disturbance, the applicant shall ensure that the project contractor implements basic BMPs to control dust. Implementation of the dust control measures recommended by BAAQMD and listed below would reduce the air quality impacts associated with grading and new construction to a less-than-significant level. The contractor shall implement the following BMPs:

1. All exposed surfaces (e.g., parking areas, staging areas, soil piles, graded areas, and unpaved access roads) shall be watered at a frequency adequate to maintain minimum soil moisture of 12 percent. Moisture content can be verified by lab samples or moisture probe.

2. All excavation, grading, and/or demolition activities shall be suspended when average wind speeds exceed 20 mph.

3. The simultaneous occurrence of excavation, grading, and ground-disturbing construction activities on the same area at any one time shall be limited. Activities shall be phased to reduce the amount of disturbed surfaces at any one time.

4. Wind breaks (e.g., trees, fences) shall be installed on the windward side(s) of actively disturbed areas of construction. Wind breaks should have at maximum 50 percent air porosity.

5. Vegetative ground cover (e.g., fast-germinating native grass seed) shall be planted in disturbed areas as soon as possible and watered appropriately until vegetation is established.

6. All roadways, driveways, and sidewalks to be paved shall be completed as soon as possible. Building pads shall be laid as soon as possible after grading unless seeding or soil binders are used.

7. All vehicle speeds on unpaved roads shall be limited to 15 mph.

8. All haul trucks transporting soil, sand, or other loose material off-site shall be covered.

9. Site accesses to a distance of 100 feet from the paved road shall be treated with a 6 to 12 inch compacted layer of wood chips, mulch, or gravel.

10. All trucks and equipment, including their tires, shall be washed off prior to leaving the site.

11. All visible mud or dirt track-out onto adjacent public roads shall be removed using wet power vacuum street sweepers at least once per day. The use of dry power sweeping is prohibited.

12. Sandbags or other erosion control measures shall be installed to prevent silt runoff to public roadways from sites with a slope greater than one percent.

13. Idling times shall be minimized either by shutting equipment off when not in use or reducing the maximum idling time two minutes (as required by the California airborne

toxics control measure Title 13, Section 2485 of California Code of Regulations [CCR]). Clear signage shall be provided for construction workers at all access points.

14. All construction equipment shall be maintained and properly tuned in accordance with manufacturer's specifications. All equipment shall be checked by a certified mechanic and determined to be running in proper condition prior to operation.

15. Post a publicly visible sign with the telephone number and person to contact at the Lead Agency regarding dust complaints. This person shall respond and take corrective action within 48 hours. The Air District's phone number shall also be visible to ensure compliance with applicable regulations.

Effectiveness of Mitigation Measure AQ-1

The measures above are consistent with BAAQMD-recommended basic and additional control measures for reducing fugitive particulate matter that are contained in the BAAQMD CEQA Air Quality Guidelines. It is estimated implementing these BMPs will reduce fugitive $PM_{2.5}$ emissions by approximately 69 percent.[9]

Mitigation Measure AQ-2: **Selection of equipment during construction to minimize emissions.**

The project shall develop a plan demonstrating that the off-road equipment used onsite to construct the project would achieve a fleet-wide average 86-percent reduction in DPM exhaust emissions or greater. One feasible plan to achieve this reduction would include the following:

- All diesel-powered off-road equipment, larger than 25 horsepower, operating on the site for more than two days continuously shall, at a minimum, meet U.S. EPA particulate matter emissions standards for Tier 4 Final engines. Where Tier 4 equipment is not available, exceptions could be made for equipment that includes CARB-certified Level 3 Diesel Particulate Filters or equivalent. Equipment that is electrically powered or uses non-diesel fuels would also meet this requirement.

Effectiveness of Mitigation Measure AQ-2

RCEM and CalEEMod were used to compute emissions associated with this mitigation measure assuming that all equipment met U.S. EPA Tier 4 Final engines standards. With the implementation of *Mitigation Measure AQ-2*, the cancer risk levels and total annual $PM_{2.5}$ concentrations from the project's construction would be reduced by approximately 90 percent and would not exceed the BAAQMD single-source health risk significance thresholds (see **Impact AIR-2** below).

[9] Based on emissions reductions estimated using CalEEMod.

Operational Period Emissions

Operational air emissions from the project would be generated primarily from traffic using the new bridge and roadway connections. EMFAC2021 was used to estimate emissions from operation of the proposed project using traffic volumes estimated using the new bridge.

Traffic

Emissions associated with vehicle travel depend on the year of analysis because emission control technology requirements are phased-in over time. Therefore, the earlier the year analyzed in the model, the higher the emission rates projected by EMFAC2021. This analysis assumed that the bridge and new roadway connection would be operating in the year 2024. Emissions associated with operation later than 2024 would be lower assuming traffic growth on the new bridge and roadways remains at one percent or less per year.

Daily traffic forecasts for the new bridge and roadway connections were provided by the project's traffic consultant[10] and used to estimate VMT associated with the new bridge/roadways, which were used to estimate emissions. *Attachment 3* provides the traffic volumes, lengths, and emissions factors used to estimate emissions from operation of the project.

EMFAC2021 and CT-EMFAC2017

Emissions rates for criteria pollutants (i.e., ROG, NO_X, PM_{10} and $PM_{2.5}$) and GHGs (i.e., CO_2, N_2O, CH_4, and HFCs) were developed using the latest version of CARB's on-road vehicle emissions model, EMFAC2021. EMFAC2021 became available for use in January 2021 but has yet to be approved by the EPA.[11] It includes the latest data on California's car and truck fleets and travel activity. Emission processes modeled for the analysis include running exhaust, running evaporative losses, and fugitive dust (i.e., road dust, tire ware, and break ware).

The 2024 CalEEMod default fleet mix for Santa Clara County was used to estimate the fraction of trucks (i.e., Truck 1 and Truck 2) in the project area. CT-EMFAC2017 was used to estimate the fraction of gasoline and diesel vehicles in three vehicle categories (i.e., Non-Truck, Truck 1, and Truck 2) based on the CalEEMod default truck percentage of 4.5 percent. CT-EMFAC2017 is the Caltrans version of the CARB's EMFAC2017 emissions model and provides the vehicle fractions by fuel type based on the fraction of trucks and non-trucks. These CT-EMFAC2017 fractions were then applied to the EMFAC2021 emissions rates and aggregated to provide one emissions factor for each pollutant and speed needed. *Attachment 3* provides the information used to generate the emissions factors used.

CT-EMFAC2017 was also used to develop the fugitive road dust emissions factors based on CARB's current methodology. EMFAC2021 does not include road dust emissions factors. For other pollutants not included in the EMAC2021 model (i.e., DPM, N_2O, HFC, etc.), a ratio of emissions factors produced by CT-EMFAC2017 model was applied to an appropriate

10 Email from Natalie Noyes, David J. Powers & Associates, Inc. to Illingworth & Rodkin. September 25, 2021. Daily vehicle trips estimated by Hexagon Traffic Consultants to be 700-800.

11 While approved for use by CARB, EMFAC2021 has yet to be approved by the EPA for use on federally funded transportation projects.

EMFAC2021 pollutant emissions factor to develop an appropriate EMFAC2021-based emissions factor for the speed needed (i.e., 25 miles per hour). Inputs to both emissions models include region (i.e., Santa Clara County), year of analysis (i.e., 2024), and season (i.e., annual).

Existing Uses

A CalEEMod model run was developed to estimate the indirect emissions from operation of the existing land use, a 41,307-sf general office building and associated parking lot, in 2024 to compare to the operation of the new bridge and roadway connection. CalEEMod default data were used to estimate emissions. Table 3 shows that, when compared to the existing use, the new bridge and roadway connections would generate less criteria pollutant emissions. Thus, the project would result in a regional air quality benefit to criteria pollutant emissions. *Attachment 2* provides the CalEEMod run conducted to generate the emissions existing condition emissions.

Summary of Computed Operational Period Emissions

The emissions factors described above were applied to the daily traffic data (i.e., VMT estimated based on traffic volumes) for the new bridge and roadway connections to estimate daily emissions in grams per day. These estimates were then converted to pounds of pollutant per day and tons of pollutant per year. GHG emissions were estimated at the grams per day level and then converted to metric tons of CO_2 equivalent (MT CO_2e) using the appropriate global warming potential (GWP). Table 3 shows average daily construction emissions of ROG, NO_X, total PM_{10}, and total $PM_{2.5}$ during operation of the project. GHG emissions are provided in Table 10. The operational period emissions would not exceed the BAAQMD significance thresholds.

Table 3. Operational Period Emissions

Scenario	ROG	NOx	PM_{10}	$PM_{2.5}$
2024 Project Operational Emissions (*tons/year*)[1]	0.002 tons	0.004 tons	0.03 tons	0.004 tons
BAAQMD Thresholds (tons /year)	*10 tons*	*10 tons*	*15 tons*	*10 tons*
Exceed Threshold?	*No*	*No*	*No*	*No*
2024 Project Operational Emissions *(pounds/day)*	*0.01*	*0.02*	*0.14*	*0.02*
BAAQMD Thresholds (pounds/day)	*54* lbs.	*54* lbs.	*82* lbs.	*54* lbs.
Exceed Threshold?	*No*	*No*	*No*	*No*
2024 Existing Use Emissions (*tons/year*)[1]	0.39	0.17	0.25	0.07
Net Change (tons/year)	*-0.39*	*-0.16*	*-0.22*	*-0.06*

Notes: [1] Assumes 365-day operation.

Impact AIR-2: Expose sensitive receptors to substantial pollutant concentrations?

Project impacts related to increased community risk can occur either by introducing a new source of TACs during construction and operation with the potential to adversely affect existing sensitive receptors in the project vicinity or by introducing a new sensitive receptor, such as residents, in proximity to an existing source of TACs.

Temporary project construction activity would generate dust and equipment exhaust that could affect nearby sensitive receptors. Additionally, the new bridge and roadway connections would attract traffic, which would produce additional TAC and air pollutant emissions not currently being emitted near the existing residential areas. The project traffic would consist of primarily light-duty vehicles and the number of daily trips generated by the project are small (i.e., 700-800 daily trips).[12] Emissions from automobile traffic generated by the project would be localized in the area of the new bridge and roadway connections and would not be considered a substantial new source of TACs or $PM_{2.5}$. Despite this, an analysis of the health risks associated with both the temporary construction activities and long-term operational conditions of the project were conducted.

Community risk impacts are addressed by predicting increased lifetime cancer risk, the increase in annual $PM_{2.5}$ concentrations, and computing the Hazard Index (HI) for non-cancer health risks. This involved modeling of TAC and $PM_{2.5}$ emissions, dispersion modeling, and computing cancer risk and HI. The methodology for computing community risks impacts is provided in *Attachment 1*.

Additionally, the impact of the existing sources of TACs upon the existing sensitive receptors was assessed. There are a few existing sources of TACs in the vicinity of the project: one auto body shop and two major roadways exceeding average daily traffic (ADT) of 10,000 vehicles (Montague Expressway and E. Capitol Avenue). All the other roadways near the project site are assumed to have an ADT of less than 10,000 vehicles.

<u>Community Risk from Project Construction Activity</u>

Construction equipment and associated heavy-duty truck traffic generates diesel exhaust, which is a known TAC. Although it was concluded in the previous sections (see Table 2) that construction exhaust air pollutant emissions would not contribute substantially to existing or projected air quality violations, construction exhaust emissions may still pose health risks for sensitive receptors such as surrounding residents. The primary community risks associated with construction emissions are cancer risk and exposure to $PM_{2.5}$. A health risk assessment of the project construction activities was conducted to evaluate the potential health effects to nearby sensitive receptors from construction emissions of DPM and $PM_{2.5}$.[13]

[12] Based on daily trip rates provided to DJP by Hexagon Transportation Consultants, Inc. via email to Natalie Noyes. September 25, 2021.
[13] DPM is identified by California as a toxic air contaminant due to the potential to cause cancer.

Construction Period Emissions

The RCEM and CalEEMod models provided total annual PM_{10} exhaust emissions (assumed to be DPM) for the off-road construction equipment and on-road vehicles. Total uncontrolled DPM emissions from the construction site was estimated to be 0.11 tons (218 pounds). The on-road emissions are a result of haul truck travel during grading activities, worker travel, and vendor deliveries during construction. A trip length of a half-mile was used to represent vehicle travel while at or near the construction site. It was assumed emissions from on-road vehicles traveling at or near the site would occur at the construction site. Uncontrolled fugitive $PM_{2.5}$ dust emissions were estimated to be 0.11 tons (227 pounds) using the same methods and assumptions used to estimate site DPM emissions.

Dispersion Modeling

The U.S. EPA AERMOD dispersion model was used to predict DPM and $PM_{2.5}$ concentrations at sensitive receptors (i.e., residents, school children) in the vicinity of the project construction area. The AERMOD dispersion model is a BAAQMD-recommended model for use in modeling ambient impacts of these types of emission activities for CEQA projects.[14] Emission sources for the construction site were grouped into two categories: exhaust emissions of DPM and fugitive $PM_{2.5}$ dust emissions. Combustion equipment exhaust emissions were modeled as a series of point sources with a 9-foot release height (i.e., construction equipment exhaust stack height) placed at 32.8-feet (10-meter) intervals throughout the construction site. This resulted in 169 individual point sources being used to represent mobile equipment DPM exhaust emissions in the construction area, with DPM emissions occurring throughout the project construction site. Construction fugitive $PM_{2.5}$ dust emissions were modeled as an area source encompassing the entire construction site with a near ground level release height of 7 feet (2 meters). Fugitive emissions from the construction activities and on-site vehicle travel were distributed throughout the modeled area sources. Construction emissions were modeled as occurring daily between 7:00 a.m. to 7:00 p.m.

A five-year data set (2013-2017) of hourly meteorological data from Norman Y. Mineta San José International Airport (SJC) prepared for use with the AERMOD model by BAAQMD was used. Annual DPM and $PM_{2.5}$ concentrations from construction activities during June 2023 through October 2024 were calculated at nearby sensitive receptors using AERMOD. Receptor heights of 4.9 feet (1.5 meters), 15.1 feet (4.6 meters), and 24.9 feet (7.6 meters) were used to represent the breathing heights at nearby multi-family homes.

Construction Impacts

The maximum modeled annual DPM and $PM_{2.5}$ concentrations, and thus the maximally exposed individuals (MEIs), were identified as those living at an adjacent multi-family residence approximately 16 feet to the east of the project site (as shown in Figure 1). Both the maximum cancer risk and maximum $PM_{2.5}$ concentration occurred at the same location (i.e., the MEI) with the highest $PM_{2.5}$ concentration occurring on the first floor of the MEI (4.9 feet or 1.5 meters above

[14] Bay Area Air Quality Management District (BAAQMD), 2012, *Recommended Methods for Screening and Modeling Local Risks and Hazards, Version 3.0.* May.

ground) and the maximum cancer risk occurring on the second floor (15.1 feet or 4.6 meters above ground). Using the maximum modeled annual DPM concentrations, maximum increased cancer risks were calculated using BAAQMD recommended methods and exposure parameters described in *Attachment 1*. Non-cancer health hazards and maximum annual $PM_{2.5}$ concentrations were also calculated and identified. *Attachment 4* to this report includes the emission calculations used for the construction area source modeling and the construction cancer risk calculations.

Figure 1. Project Construction Site, Locations of Off-Site Sensitive Receptors, and Locations of TAC Impacts

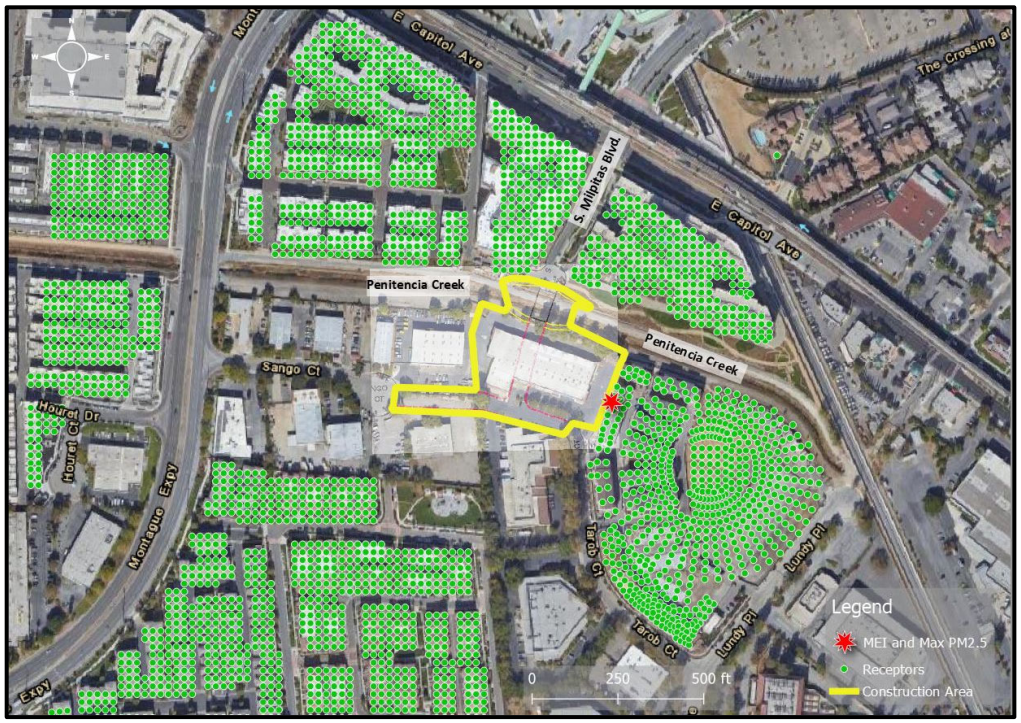

Results indicate the unmitigated maximum increased cancer risks and maximum annual $PM_{2.5}$ concentrations from construction exceed the BAAQMD single-source thresholds of greater than 10.0 per million for cancer risk and greater than 0.3 $\mu g/m^3$ for $PM_{2.5}$ concentrations. However, with the incorporation of *Mitigation Measure AQ-1* and *Mitigation Measure AQ-2,* the increased project cancer risk and $PM_{2.5}$ concentration from construction would not exceed their single-source thresholds. Both the unmitigated and mitigated non-cancer HI from construction activities would be below the single-source significance threshold of 1.0. Table 4 summarizes the maximum cancer risks, $PM_{2.5}$ concentrations, and HIs for project related construction activities affecting the off-site residential MEI. Implementing *Mitigation Measure AQ-2* would reduce the maximum increased cancer risk to nearby residential areas from construction, assuming infant exposure, to 8.28 in one million or less and implementing *Mitigation Measure AQ-1* and *Mitigation Measure AQ-2* would reduce the total maximum annual $PM_{2.5}$ concentration to 0.24 $\mu g/m^3$.

Table 4. Construction Risk Impacts at the Off-site Residential MEI

Source		Cancer Risk (per million)	Annual $PM_{2.5}$ ($\mu g/m^3$)	Hazard Index
Project Construction	Unmitigated	**82.77 (infant)**	**0.87**	0.06
	Mitigated*	8.28 (infant)	0.24	<0.01
BAAQMD Single-Source Threshold		***10***	***0.3***	***1.0***
Exceed Threshold?	Unmitigated	***Yes***	***Yes***	*No*
	Mitigated*	*No*	*No*	*No*

* Mitigation Measure AQ-1 includes basic and enhanced fugitive dust controls and Mitigation Measure AQ-2 includes construction equipment engines with Tier 4 Final emissions limits.

Community Risks from Project Operation – Traffic

Operation of the project would generate emissions from mobile sources (i.e., traffic). While these emissions would not be as intensive at or near the site as construction activity, they would contribute to long-term effects to sensitive receptors.

It is estimated the new roadway connection would attract 700-800 vehicles per day. Most of the vehicles using the new route consist mostly of light-duty vehicles that are not a source of substantial TACs or $PM_{2.5}$. Despite this, the TAC emissions generated from the traffic on the new route were estimated using EMFAC2021 and the length (in miles) of the new roadway. *Attachment 3* provides the traffic volumes, lengths, and emissions factors used to estimate emissions from operation of the project.

EMFAC2021 and CT-EMFAC2017

Emissions rates for TAC pollutants (i.e., DPM and Fugitive $PM_{2.5}$) were developed using EMFAC2021 using the same methodology describe previously for project operation emissions. The 2024 CalEEMod default fleet mix for Santa Clara County was used to estimate the fraction of trucks (i.e., Truck 1 and Truck 2) in the project area and CT-EMFAC2017 was used to estimate the fraction of gasoline and diesel vehicles in three vehicle categories (i.e., Non-Truck, Truck 1, and Truck 2) and emissions factors for $PM_{2.5}$ fugitive road dust. CT-EMFAC2017 vehicle fractions were then applied to EMFAC2021 emissions rates and aggregated to provide one emissions factor for each pollutant needed.

To estimate DPM, which is not included in the EMAC2021 model, the CT-EMFAC2017 ratio of $PM_{2.5}$ emissions rates to DPM emissions rates was applied to the EMFAC2021 $PM_{2.5}$ emissions factor to produce an appropriate EMFAC2021-based emissions factor for the speed needed (i.e., 25 miles per hour). Inputs to both emissions models include region (i.e., Santa Clara County), year of analysis (i.e., 2024), and season (i.e., annual). *Attachment 3* provides the information used to generate the emissions factors used.

Hourly TAC emissions rates were developed for the traffic using the new roadway connection. Hourly traffic distributions were estimated using the hourly distributions obtained from Caltrans Performance Measurement System (PeMS). PeMS data is collected in real-time from nearly 40,000 individual detectors spanning the freeway system across all major metropolitan areas of

California.[15] The fraction of traffic volume on each hour on Interstate 880 west of the project area and Interstate 680 east of the project area were calculated, averaged, and applied to the ADT estimate (700) to obtain hourly traffic emissions for the project. These emissions were then input into the dispersion model to estimate the impacts to existing residents.

Dispersion Modeling

To obtain an estimate of potential cancer risks and $PM_{2.5}$ impacts from operation of the new roadway, the U.S. EPA AERMOD dispersion model was used to calculate the maximum annual TAC concentrations at off-site sensitive receptor locations (nearby residences). The same receptors, breathing heights, and meteorological data used in the construction dispersion modeling were used for this analysis. Hourly emissions from vehicle traffic were modeled using a series of area sources along a line (line area sources), with line segments used to represent the new roadway connections. Figure 2 shows the roadway links used for the modeling and receptor locations where concentrations were calculated.

To calculate the increased cancer risk from the new roadway connection at the MEI, the cancer risks exposure duration was adjusted to account for the MEI being exposed to traffic on the new roadway for a 30-year lifetime period. Table 5 lists the risks and hazards from the project. The emissions and health risk calculations for the new roadway connections are included in *Attachment 4*.

Summary of Operations-Related Community Risks at the Off-site MEI

The MEI related to the operation of the new roadway is located at the multi-family residential building directly to the east of the new roadway. $PM_{2.5}$ and HI are based on an annual maximum exposure, which would be approximately the same every year over the 30-year operation of the roadway. However, cancer risk is based on a total 30-year exposure to traffic using the new roadway. Full operation of the project is assumed to occur in 2024 or later. Emissions associated with vehicle travel depend on the year of analysis because emission control technology requirements are phased-in over time. Therefore, the earlier the year analyzed in the model, the higher the emission rates produced by EMFAC2021 and CT-EMFAC2017. Year 2024 emissions were conservatively assumed as being representative of future conditions over the period that cancer risks are evaluated (30 years), since, as discussed above, overall vehicle emissions, in particular diesel truck emissions will decrease in the future.

Table 5 shows the health risk associated with operation of the new roadway connection would be well below the BAAQMD single-source thresholds for increased cancer risk, maximum annual $PM_{2.5}$ concentration, and HI.

[15] https://dot.ca.gov/programs/traffic-operations/mpr/pems-source

Table 5. Operation Risk Impacts at the Off-site Residential MEI

Source		Cancer Risk (per million)	Annual $PM_{2.5}$ ($\mu g/m^3$)	Hazard Index
Roadway Operation (Years 0-30)	Unmitigated	0.05 (infant)	0.02	<0.1
	BAAQMD Single-Source Threshold	***10***	***0.3***	***1.0***
	Exceed Threshold?	*No*	*No*	*No*

Summary of Project-Related Community Risks at the Off-site Project MEI

For this project, the construction MEI identified in Figure 1 is also the MEI for the project. $PM_{2.5}$ and HI are based on an annual maximum exposure, which would occur during construction. However, cancer risk is based on a total 30-year exposure. At the MEI location, individuals would be exposed to 18 months (i.e., 2 years) of health risk impacts from construction and 28 years of impacts from the new roadway connection. Thus, to estimate total project cancer risk from construction and operation of the project were summed together for a 30-year exposure period at the MEI. Unlike the increased maximum cancer risk, the annual $PM_{2.5}$ concentration and HI risks are not additive but based on an annual maximum risk for the entirety of the project.

As shown in Table 6, the total unmitigated project risks would exceed the BAAQMD single-source thresholds for increased cancer risk and maximum $PM_{2.5}$ concentration. However, with the incorporation of *Mitigation Measure AQ-1* and *Mitigation Measure AQ-2*, the total increased cancer risk and maximum $PM_{2.5}$ concentration would be reduced to below the BAAQMD single-source thresholds. The maximum annual HI value for the project does not exceed the BAAQMD annual HI single-source thresholds.

Table 6. Construction and Operation Risk Impacts at the Off-site Residential MEI

Source		Cancer Risk (per million)	Annual $PM_{2.5}$ ($\mu g/m^3$)	Hazard Index
Project Construction (Years 0-2)	Unmitigated Mitigated*	**82.77 (infant)** 8.28 (infant)	**0.87** 0.24	0.06 <0.01
Roadway Operation (Years 3-30)		0.02	0.02	<0.01
Total/Maximum Project Risks (Years 0-30)	Unmitigated Mitigated*	**82.79 (infant)** 8.30 (infant)	**0.87** 0.24	0.06 <0.01
	BAAQMD Single-Source Threshold	***10***	***0.3***	***1.0***
Exceed Threshold?	Unmitigated Mitigated*	***Yes*** *No*	***Yes*** *No*	*No* *No*

* Mitigation Measures AQ-1 and AQ-2 include basic fugitive dust controls and construction equipment engines with Tier 4 Final emissions limits.

Cumulative Impact of TAC Sources on the Off-Site Construction MEI

Community health risk assessments typically look at all substantial sources of TACs that can affect sensitive receptors that are located within 1,000 feet of the project site (i.e., influence area). These sources include railroads, freeways or highways, busy surface streets, and existing stationary sources identified by BAAQMD. A review of the project area indicates that traffic on Montague Expressway and E. Capitol Avenue exceed the ADT threshold of 10,000 vehicles. All other roadways within the area are assumed to be below the 10,000 ADT threshold. One existing stationary source of TACs is located within the 1,000-foot influence area according to BAAQMD's stationary source website map. Figure 2 shows the existing TAC sources near the project site. Community risk impacts from these sources upon the project MEI are reported in Table 6. Details of the modeling and community risk calculations are included in *Attachments 5 and 6.*

Montague Expressway and E. Capitol Avenue

The project site and project MEI are both close to Montague Expressway and E. Capitol Avenue, with the project MEI located approximately 1,186 feet east of Montague Expressway and 635 feet south of E. Capitol Avenue. A refined analysis of the impacts of TACs and $PM_{2.5}$ from the arterial roadways on the project MEI is necessary to evaluate potential cancer risks and $PM_{2.5}$ concentrations associated with it. A review of the 2024 with project peak hour traffic information provided by Hexagon[16] indicates this portion of Montague Expressway would have an estimated weekday traffic volume of approximately 33,000 vehicles per day and E. Capitol Avenue would have an estimated weekday traffic volume of 20,100 northwest of S. Milpitas Boulevard. and approximately 12,000 vehicles southeast of S. Milpitas Boulevard. The emissions estimation methodology previously described to estimate emissions from the project was used to estimate emissions for these roadways given the daily traffic volumes and posted speeds.

[16] Hexagon Transportation Consultants, Inc. Traffic data provided to Illingworth and Rodkin by DJP via email from Natalie Noyes. September 25, 2021.

Figure 2. Project Site and Nearby TAC and $PM_{2.5}$ Sources

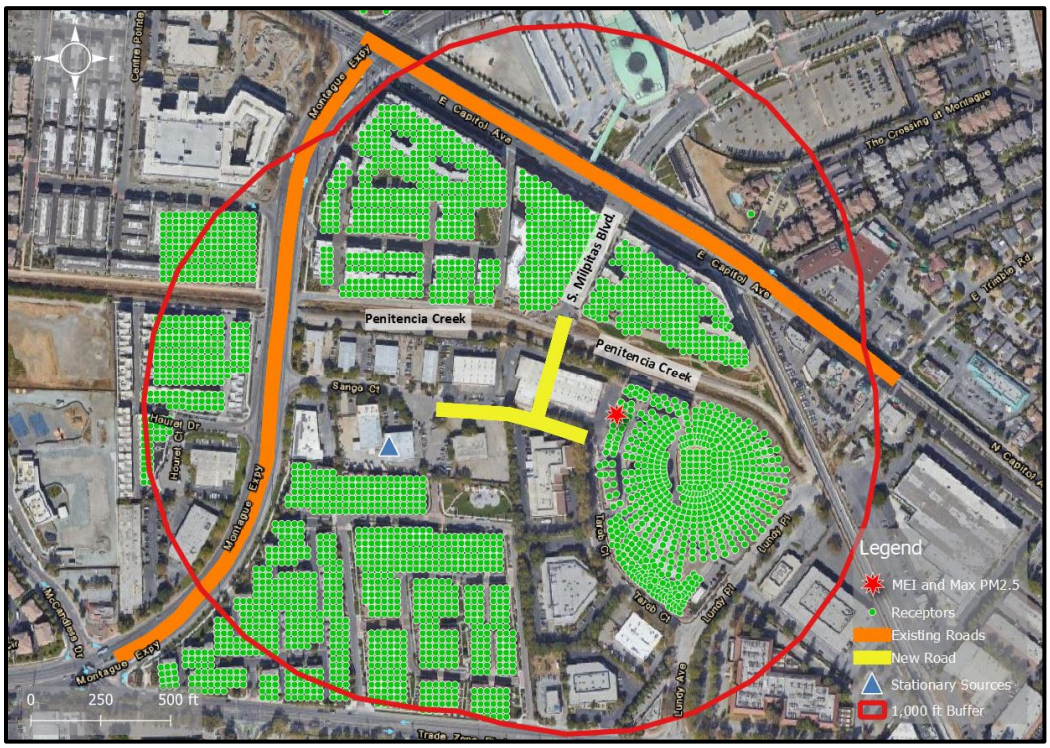

<u>*Modeling Roadway Emissions*</u>

Analysis of Montague Expressway and E. Capitol Avenue involved developing emissions estimates of DPM, organic TACs (as TOG), and $PM_{2.5}$ emissions for 2024 traffic volume estimates were developed using EMFAC2021 and the same methodology describe previously for project operation emissions. The 2024 CalEEMod default fleet mix for Santa Clara County was used to estimate the fraction of trucks (i.e., Truck 1 and Truck 2) in the project area and CT-EMFAC2017 was used to estimate the fraction of gasoline and diesel vehicles in three vehicle categories (i.e., Non-Truck, Truck 1, and Truck 2) and emissions factors for $PM_{2.5}$ fugitive road dust. CT-EMFAC2017 vehicle fractions were then applied to EMFAC2021 emissions rates and aggregated to provide one emissions factor for each pollutant needed.

To estimate DPM, which is not included in the EMAC2021 model, the CT-EMFAC2017 ratio of $PM_{2.5}$ emissions rates to DPM emissions rates was applied to the EMFAC2021 $PM_{2.5}$ emissions factor to produce an appropriate EMFAC2021-based emissions factor for the speeds needed. Inputs to both emissions models include region (i.e., Santa Clara County), year of analysis (i.e., 2024), and season (i.e., annual). For all hours of the day, other than during peak a.m. and p.m. periods, an average speed of 45 mph was assumed for all vehicles on Montague Expressway and an average speed of 40 mph was used for E. Capitol Avenue. Traffic speeds during the peak a.m. and p.m. periods were assumed to be 5 miles per hour slower (i.e., 40 mph and 35 mph, respectively) to account for congestion and the limited amount of access in the area. *Attachment 5* provides the information used to generate the emissions factors used for the analysis of Montague Expressway and E. Capitol Avenue.

Full operation of the project is assumed to occur in 2024 or later with construction beginning in June 2023. Emissions associated with vehicle travel depend on the year of analysis because emission control technology requirements are phased-in over time. Therefore, the earlier the year analyzed in the model, the higher the emission rates produced by EMFAC2021 and CT-EMFAC2017. Year 2024 emissions were conservatively assumed as being representative of future conditions over the period that cancer risks are evaluated (30 years), since, as discussed above, overall vehicle emissions, in particular diesel truck emissions will decrease in the future.

Hourly traffic distributions were estimated using the hourly distributions obtained from Caltrans (PeMS) data as previously described. The fraction of traffic volume on each hour on Interstate 880 west of the project area and Interstate 680 east of the project area were calculated, averaged, and applied to the AADT estimates for each roadway to obtain hourly traffic. Emissions rates were then applied to the hourly traffic estimates to produce hourly emissions estimates for DPM, organic TACs, and $PM_{2.5}$ along the applicable roadway segments within 1,000 feet of the project. These emissions were then input into an air quality dispersion model (AERMOD) to estimate TAC and $PM_{2.5}$ concentrations at the project MEI previously identified.

Dispersion Modeling

Dispersion modeling of TAC and $PM_{2.5}$ emissions was conducted using the U.S. EPA AERMOD dispersion model, which is recommended by the BAAQMD for this type of analysis. Traffic on Montague Expressway and E. Capitol Avenue within approximately 1,000 feet of the project site was evaluated with the model. Emissions from vehicle traffic were modeled using a series of area sources along a line (line area sources), with line segments used to represent all lanes of traffic. The modeling used a five-year data set (2013-2017) of hourly meteorological data from Norman Y. Mineta San José International Airport (SJC) prepared by the BAAQMD for use with the AERMOD model. Other inputs to the model included road geometry, hourly traffic emissions, and receptor locations and heights. Figure 2 shows the roadway links used for the modeling and receptor locations where concentrations were calculated.

Computed Cancer and Non-Cancer Health Impacts of Montague Expressway and E. Capitol Avenue

The increased lifetime cancer risks and maximum annual $PM_{2.5}$ concentrations from the major roadways in the area at the MEI were computed using the modeled TAC and $PM_{2.5}$ concentrations and BAAQMD methods and exposure parameters described in *Attachment 1*. The maximum increased cancer risk associated with Montague Expressway at the MEI receptor would be 0.61 in one million, the maximum $PM_{2.5}$ concentration at the MEI receptors would be 0.03 $\mu g/m^3$, and the HI at the MEI location would be less than 0.01. The maximum increased cancer risk associated with E. Capitol Avenue at the MEI receptor would be 0.13 in one million, the maximum $PM_{2.5}$ concentration at the MEI receptors would be less than 0.01 $\mu g/m^3$, and the HI at the MEI location would be less than 0.01.

The risk impacts from both roadways on the MEI are shown in Table 7. Details of the emission calculations, dispersion modeling and cancer risk calculations for the MEI are provided in *Attachment 6.*

Stationary Sources

Permitted stationary sources of air pollution near the project site were identified using BAAQMD's *Permitted Stationary Sources 2018* GIS website,[17] which identifies the location of nearby stationary sources and their estimated risk and hazard impacts, including emissions and adjustments to account for new OEHHA guidance. A Stationary Source Information Form (SSIF) containing the identified sources was prepared and submitted to BAAQMD. BAAQMD provided updated emissions data and risk values.[18] The provided risk values were then adjusted for distance using the appropriate BAAQMD *Distance Multiplier Tool for Diesel Internal Combustion Engines, Gasoline Dispensing Facilities (GDFs), or Generic Sources.*

Four stationary sources were initially identified in the area, but only one of the stationary sources was identified within 1,000 ft of the project, Facility IDs #17576 (an Auto Body Coating Operation). Estimated risk values for this stationary source at the MEI are listed in Table 7.

Combined Community Health Risk at Off-Site Construction MEI

Table 7 reports both the construction and cumulative community risk impacts at the sensitive receptors most affected by the project (i.e., the construction MEI). Without mitigation, the project's community risk from construction activities would exceed the single-source maximum cancer risk and $PM_{2.5}$ concentration significance thresholds but would not exceed the HI significance threshold. With the incorporation of *Mitigation Measure AQ-1 and AQ-2*, the project would not exceed single-source thresholds. The cumulative HI value would not exceed cumulative significance thresholds for either the unmitigated or mitigated condition.

The cumulative unmitigated construction cancer risk and HI would not exceed the BAAQMD cumulative significance thresholds of 100 in a million, and 10.0, respectively. However, the unmitigated annual maximum $PM_{2.5}$ concentration would exceed the BAAQMD cumulative significance threshold of 0.8 $\mu g/m^3$ $PM_{2.5}$. With *Mitigation Measure AQ-1 and AQ-2* the cumulative annual maximum $PM_{2.5}$ concentration would not exceed the cumulative-source threshold.

[17]BAAQMD, https://baaqmd.maps.arcgis.com/apps/webappviewer/index.html?id=2387ae674013413f987b1071715daa65

[18] Email correspondence with Matthew Hanson, BAAQMD, November 4, 2021.

Table 7. Impacts from Combined Sources at Off-Site Construction MEI

Source		Cancer Risk (per million)	Annual $PM_{2.5}$ ($\mu g/m^3$)	Hazard Index
Project Impacts				
Total/Maximum Construction Risks (Years 0-30)	Unmitigated	**82.77 (infant)**	**0.87**	0.06
	Mitigated*	8.28 (infant)	0.24	<0.01
BAAQMD Single-Source Threshold		***10***	***0.3***	***1.0***
Exceed Single Source Threshold?	Unmitigated	***Yes***	***Yes***	*No*
	Mitigated*	*No*	*No*	*No*
Cumulative Impacts				
Montague Expressway		0.61	0.03	<0.01
E. Capitol Avenue		0.13	<0.01	<0.01
Facility #17576 (Auto Body Coating Operation)		NA	NA	<0.01
Cumulative Total	Unmitigated	83.51	**0.91**	<0.09
	Mitigated*	9.02	0.28	<0.04
BAAQMD Cumulative Source Threshold		***100***	***0.8***	***10.0***
Exceed Cumulative Source Threshold?	Unmitigated	*No*	***Yes***	*No*
	Mitigated*	*No*	*No*	*No*

* Mitigation Measures AQ-1 and AQ-2 include basic fugitive dust controls and construction equipment engines with Tier 4 Final emissions limits.

Cumulative Impact of TAC Sources on the Off-Site Operations MEI

The cumulative impacts of operating the project with the existing TAC sources described above are presented in Table 8. Operation of the new roadway connection with the existing TAC sources would not exceed the BAAQMD cumulative-source thresholds for increased cancer risk, maximum annual $PM_{2.5}$ concentration, or HI.

Table 8. Impacts from Combined Sources at Off-Site Operation MEI

Source		Cancer Risk (per million)	Annual $PM_{2.5}$ ($\mu g/m^3$)	Hazard Index
Project Impacts				
Roadway Operation (Years 0-30)	Unmitigated	0.05 (infant)	0.02	<0.01
BAAQMD Single-Source Threshold		***10***	***0.3***	***1.0***
Exceed Single Source Threshold?	Unmitigated	*No*	*No*	*No*
Cumulative Impacts				
Montague Expressway		0.61	0.03	<0.01
E. Capitol Avenue		0.13	<0.01	<0.01
Facility #17576 (Auto Body Coating Operation)		NA	NA	<0.01
Cumulative Total	Unmitigated	0.79	<0.06	<0.04
BAAQMD Cumulative Source Threshold		***100***	***0.8***	***10.0***
Exceed Cumulative Source Threshold?	Unmitigated	*No*	*No*	*No*

Cumulative Impact of Project and TAC Sources on the Off-Site Project MEI

The cumulative impacts of the total project (i.e., operations and construction) including the existing TAC sources previously described are presented in Table 9. Because the Construction MEI and

the Project MEI are the same, the only difference between the impacts in Table 7 and Table 9 is the addition of 28 years of TAC emissions from the new roadway connection. Without mitigation, the project's total community risk would exceed BAAQMD's single-source maximum cancer risk and $PM_{2.5}$ concentration significance thresholds but would not exceed the HI significance threshold. With the incorporation of *Mitigation Measure AQ-1* and *AQ-2*, the project would not exceed single-source thresholds.

Table 9. Impacts from Combined Sources at Off-Site Project MEI

Source		Cancer Risk (per million)	Annual $PM_{2.5}$ ($\mu g/m^3$)	Hazard Index
Project Impacts				
Total/Maximum Construction Risks (Years 0-2)	Unmitigated	**82.77 (infant)**	**0.87**	0.06
	Mitigated*	8.28 (infant)	0.24	<0.01
Roadway Operation (Years 3-30)		0.02	0.02	<0.01
BAAQMD Single-Source Threshold		***10***	***0.3***	***1.0***
Exceed Single Source Threshold?	Unmitigated	***Yes***	***Yes***	*No*
	Mitigated*	*No*	*No*	*No*
Cumulative Impacts				
Montague Expressway		0.61	0.03	<0.01
E. Capitol Avenue		0.13	<0.01	<0.01
Facility #17576 (Auto Body Coating Operation)		NA	NA	<0.01
Cumulative Total	Unmitigated	83.53	**0.91**	<0.09
	Mitigated*	9.04	0.28	<0.04
BAAQMD Cumulative Source Threshold		***100***	***0.8***	***10.0***
Exceed Cumulative Source Threshold?	Unmitigated	*No*	***Yes***	*No*
	Mitigated*	*No*	*No*	*No*

* Mitigation Measures AQ-1 and AQ-2 include basic fugitive dust controls and construction equipment engines with Tier 4 Final emissions limits.

The cumulative unmitigated construction cancer risk and HI would not exceed the BAAQMD cumulative significance thresholds of 100 in a million, and 10.0, respectively. However, the unmitigated annual maximum $PM_{2.5}$ concentration would exceed the BAAQMD cumulative significance threshold of 0.8 $\mu g/m^3$ $PM_{2.5}$. With *Mitigation Measure AQ-1 and AQ-2* the cumulative annual maximum $PM_{2.5}$ concentration would not exceed the cumulative-source threshold.

GREENHOUSE GAS EMISSIONS

Setting

Gases that trap heat in the atmosphere, GHGs, regulate the earth's temperature. This phenomenon, known as the greenhouse effect, is responsible for maintaining a habitable climate. The most common GHGs are carbon dioxide (CO_2) and water vapor but there are also several others, most importantly methane (CH_4), nitrous oxide (N_2O), hydrofluorocarbons (HFCs), perfluorocarbons (PFCs), and sulfur hexafluoride (SF_6). These are released into the earth's atmosphere through a variety of natural processes and human activities. Sources of GHGs are generally as follows:

- CO_2 and N_2O are byproducts of fossil fuel combustion.
- N_2O is associated with agricultural operations such as fertilization of crops.
- CH_4 is commonly created by off-gassing from agricultural practices (e.g., keeping livestock) and landfill operations.
- Chlorofluorocarbons (CFCs) were widely used as refrigerants, propellants, and cleaning solvents but their production has been stopped by international treaty.
- HFCs are now used as a substitute for CFCs in refrigeration and cooling.
- PFCs and sulfur hexafluoride emissions are commonly created by industries such as aluminum production and semi-conductor manufacturing.

Each GHG has its own potency and effect upon the earth's energy balance. This is expressed in terms of a global warming potential (GWP), with CO_2 being assigned a value of 1 and sulfur hexafluoride being several orders of magnitude stronger. In GHG emission inventories, the weight of each gas is multiplied by its GWP and is measured in units of CO_2 equivalents (CO_2e).

An expanding body of scientific research supports the theory that global climate change is currently affecting changes in weather patterns, average sea level, ocean acidification, chemical reaction rates, and precipitation rates, and that it will increasingly do so in the future. The climate and several naturally occurring resources within California are adversely affected by the global warming trend. Increased precipitation and sea level rise will increase coastal flooding, saltwater intrusion, and degradation of wetlands. Mass migration and/or loss of plant and animal species could also occur. Potential effects of global climate change that could adversely affect human health include more extreme heat waves and heat-related stress; an increase in climate-sensitive diseases; more frequent and intense natural disasters such as flooding, hurricanes and drought; and increased levels of air pollution.

Recent Regulatory Actions for GHG Emissions

Executive Order S-3-05 – California GHG Reduction Targets

Executive Order (EO) S-3-05 was signed by Governor Arnold Schwarzenegger in 2005 to set GHG emission reduction targets for California. The three targets established by this EO are as follows: (1) reduce California's GHG emissions to 2000 levels by 2010, (2) reduce California's GHG emissions to 1990 levels by 2020, and (3) reduce California's GHG emissions by 80 percent below 1990 levels by 2050.

Assembly Bill 32 – California Global Warming Solutions Act (2006)

Assembly Bill (AB) 32, the Global Warming Solutions Act of 2006, codified the State's GHG emissions target by directing CARB to reduce the State's global warming emissions to 1990 levels by 2020. AB 32 was signed and passed into law by Governor Schwarzenegger on September 27, 2006. Since that time, the CARB, CEC, California Public Utilities Commission (CPUC), and Building Standards Commission have all been developing regulations that will help meet the goals of AB 32 and Executive Order S-3-05, which has a target of reducing GHG emissions 80 percent below 1990 levels.

A Scoping Plan for AB 32 was adopted by CARB in December 2008. It contains the State's main strategies to reduce GHGs from business-as-usual emissions projected in 2020 back down to 1990 levels. Business-as-usual (BAU) is the projected emissions in 2020, including increases in emissions caused by growth, without any GHG reduction measures. The Scoping Plan has a range of GHG reduction actions, including direct regulations, alternative compliance mechanisms, monetary and non-monetary incentives, voluntary actions, and market-based mechanisms such as a cap-and-trade system.

As directed by AB 32, CARB has also approved a statewide GHG emissions limit. On December 6, 2007, CARB staff resolved an amount of 427 million metric tons (MMT) of CO_2e as the total statewide GHG 1990 emissions level and 2020 emissions limit. The limit is a cumulative statewide limit, not a sector- or facility-specific limit. CARB updated the future 2020 BAU annual emissions forecast, due to the economic downturn, to 545 MMT of CO_2e. Two GHG emissions reduction measures currently enacted that were not previously included in the 2008 Scoping Plan baseline inventory were included, further reducing the baseline inventory to 507 MMT of CO_2e. Thus, an estimated reduction of 80 MMT of CO_2e is necessary to reduce statewide emissions to meet the AB 32 target by 2020.

Executive Order B-30-15 & Senate Bill 32 GHG Reduction Targets – 2030 GHG Reduction Target

In April 2015, Governor Brown signed EO B-30-15, which extended the goals of AB 32, setting a greenhouse gas emissions target at 40 percent of 1990 levels by 2030. On September 8, 2016, Governor Brown signed Senate Bill (SB) 32, which legislatively established the GHG reduction target of 40 percent of 1990 levels by 2030. In November 2017, CARB issued *California's 2017 Climate Change Scoping Plan*.[19] While the State is on track to exceed the AB 32 scoping plan 2020 targets, this plan is an update to reflect the enacted SB 32 reduction target.

SB 32 was passed in 2016, which codified a 2030 GHG emissions reduction target of 40 percent below 1990 levels. CARB is currently working on a second update to the Scoping Plan to reflect the 2030 target set by Executive Order B-30-15 and codified by SB 32. The proposed Scoping Plan Update was published on January 20, 2017 as directed by SB 32 companion legislation AB 197. The mid-term 2030 target is considered critical by CARB on the path to obtaining an even deeper GHG emissions target of 80 percent below 1990 levels by 2050, as directed in Executive Order S-3-05. The Scoping Plan outlines the suite of policy measures, regulations, planning efforts,

[19] California Air Resource Board, 2017. *California's 2017 Climate Change Scoping Plan: The Strategy for Achieving California's 2030 Greenhouse Gas Targets.* November. Web: https://ww2.arb.ca.gov/sites/default/files/classic//cc/scopingplan/scoping_plan_2017.pdf

and investments in clean technologies and infrastructure, providing a blueprint to continue driving down GHG emissions and obtain the statewide goals.

The new Scoping Plan establishes a strategy that will reduce GHG emissions in California to meet the 2030 target (note that the AB 32 Scoping Plan only addressed 2020 targets and a long-term goal). Key features of this plan are:

- Cap and Trade program places a firm limit on 80 percent of the State's emissions.
- Achieving a 50-percent Renewable Portfolio Standard by 2030 (currently at about 29 percent statewide).
- Increase energy efficiency in existing buildings.
- Develop fuels with an 18-percent reduction in carbon intensity.
- Develop more high-density, transit-oriented housing.
- Develop walkable and bikeable communities.
- Greatly increase the number of electric vehicles on the road and reduce oil demand in half.
- Increase zero-emissions transit so that 100 percent of new buses are zero emissions.
- Reduce freight-related emissions by transitioning to zero emissions where feasible and near-zero emissions with renewable fuels everywhere else, and
- Reduce "super pollutants" by reducing methane and hydrofluorocarbons or HFCs by 40 percent.

In the updated Scoping Plan, CARB recommends statewide targets of no more than 6 metric tons CO_2e per capita (statewide) by 2030 and no more than 2 metric tons CO_2e per capita by 2050. The statewide per capita targets account for all emissions sectors in the State, statewide population forecasts, and the statewide reductions necessary to achieve the 2030 statewide target under SB 32 and the longer-term State emissions reduction goal of 80 percent below 1990 levels by 2050.

Executive Order B-55-18 – Carbon Neutrality

In 2018, a new statewide goal was established to achieve carbon neutrality as soon as possible, but no later than 2045, and to maintain net negative emissions thereafter. CARB and other relevant state agencies are tasked with establishing sequestration targets and create policies/programs that would meet this goal.

Senate Bill 375 – California's Regional Transportation and Land Use Planning Efforts (2008)

California enacted legislation (SB 375) to expand the efforts of AB 32 by controlling indirect GHG emissions caused by urban sprawl. SB 375 provides incentives for local governments and applicants to implement new conscientiously planned growth patterns. This includes incentives for creating attractive, walkable, and sustainable communities and revitalizing existing communities. The legislation also allows applicants to bypass certain environmental reviews under CEQA if they build projects consistent with the new sustainable community strategies. Development of more alternative transportation options that would reduce vehicle trips and miles traveled, along with traffic congestion, would be encouraged. SB 375 enhances CARB's ability to reach the AB 32 goals by directing the agency in developing regional GHG emission reduction targets to be

achieved from the transportation sector for 2020 and 2035. CARB works with the metropolitan planning organizations (e.g., Association of Bay Area Governments [ABAG] and Metropolitan Transportation Commission [MTC]) to align their regional transportation, housing, and land use plans to reduce vehicle miles traveled and demonstrate the region's ability to attain its GHG reduction targets. A similar process is used to reduce transportation emissions of ozone precursor pollutants in the Bay Area.

Senate Bill 350 - Renewable Portfolio Standards

In September 2015, the California Legislature passed SB 350, which increases the states Renewables Portfolio Standard (RPS) for content of electrical generation from the 33 percent target for 2020 to a 50 percent renewables target by 2030.

Senate Bill 100 – Current Renewable Portfolio Standards

In September 2018, SB 100 was signed by Governor Brown to revise California's RPS program goals, furthering California's focus on using renewable energy and carbon-free power sources for its energy needs. The bill would require all California utilities to supply a specific percentage of their retail sales from renewable resources by certain target years. By December 31, 2024, 44 percent of the retails sales would need to be from renewable energy sources, by December 31, 2026 the target would be 40 percent, by December 31, 2017 the target would be 52 percent, and by December 31, 2030 the target would be 60 percent. By December 31, 2045, all California utilities would be required to supply retail electricity that is 100 percent carbon-free and sourced from eligible renewable energy resource to all California end-use customers.

California Building Standards Code – Title 24 Part 11 & Part 6

The California Green Building Standards Code (CALGreen Code) is part of the California Building Standards Code under Title 24, Part 11.[20] The CALGreen Code encourages sustainable construction standards that involve planning/design, energy efficiency, water efficiency resource efficiency, and environmental quality. These green building standard codes are mandatory statewide and are applicable to residential and non-residential developments. The most recent CALGreen Code (2019 California Building Standard Code) was effective as of January 1, 2020.

The California Building Energy Efficiency Standards (California Energy Code) is under Title 24, Part 6 and is overseen by the California Energy Commission (CEC). This code includes design requirements to conserve energy in new residential and non-residential developments, while being cost effective for homeowners. This Energy Code is enforced and verified by cities during the planning and building permit process. The current energy efficiency standards (2019 Energy Code) replaced the 2016 Energy Code as of January 1, 2020. Under the 2019 standards, single-family homes are predicted to be 53 percent more efficient than homes built under the 2016 standard due more stringent energy-efficiency standards and mandatory installation of solar photovoltaic systems. For nonresidential developments, it is predicted that these buildings will use 30 percent less energy due to lightening upgrades.[21]

---

[20] See: https://www.dgs.ca.gov/BSC/Resources/Page-Content/Building-Standards-Commission-Resources-List-Folder/CALGreen#:~:text=CALGreen%20is%20the%20first%2Din,to%201990%20levels%20by%202020.

[21] See: https://www.energy.ca.gov/sites/default/files/2020-03/Title_24_2019_Building_Standards_FAQ_ada.pdf

Federal and Statewide GHG Emissions

The U.S. EPA reported that in 2018, total gross nationwide GHG emissions were 6,676.6 million metric tons (MMT) carbon dioxide equivalent (CO_2e).[22] These emissions were lower than peak levels of 7,416 MMT that were emitted in 2007. CARB updates the statewide GHG emission inventory on an annual basis where the latest inventory includes 2000 through 2018 emissions.[23] In 2018, GHG emissions from statewide emitting activities were 425 MMT. Per capita GHG emissions in California have dropped from a 2001 peak of 14.0 MMT per person to 10.7 MMT per person in 2018, a 24 percent decrease. They are also 6 MMT below the 1990 emissions level and the State's 2020 GHG limit. The most recent Bay Area emission inventory was computed for the year 2011.[24] The Bay Area GHG emission were 87 MMT. As a point of comparison, statewide emissions were about 444 MMT in 2011.

City of Milpitas Climate Action Plan

In May 2013, the City of Milpitas' Climate Action Plan (CAP) was adopted.[25] It is designed to streamline environmental review of future development projects in the City of Milpitas consistent with the CEQA Guidelines Section 15183.5(b) and BAAQMD Air Quality Guidelines. The CAP identifies a strategy, reduction measures, and implementation strategies to comply with AB 32 and SB 375. The CAP establishes a local GHG reduction target of 15% below baseline 2005 emissions levels by 2020 which matches the State's goals. The purpose of the reduction target is to identify a level of community GHG emissions below which emissions would not be cumulatively considerable under the State and BAAQMD CEQA Guidelines. The CAP does not have a specific metric ton GHG threshold for project-level construction or operation. Therefore, the BAAQMD's CEQA Air Quality Guideline's thresholds are used.

Milpitas Metro Specific Plan (formerly Transit Area Specific Plan)

In early 2019, the city began updating the *Transit Area Specific Plan* (TASP) to enrich the Plan's scope and character of development and to update the goals and strategies to reflect current and future needs for the Plan area. The updated document is called the *Milpitas Metro Specific Plan* (MMSP). When completed, the MMSP will be accompanied by a SEIR to assess and mitigate, as feasible, the impacts of the Plan, of which this project is a part. As previously noted, the MMSP would replace the TASP, for which a prior EIR was prepared.[26] The SEIR analysis will focus on the potential impacts of the changes to the MMSP and will not reassess the Plan as a whole.

---

[22] United States Environmental Protection Agency, 2020. *Inventory of U.S. Greenhouse Gas Emissions and Sinks 1990-2018*. April. Web: https://www.epa.gov/sites/production/files/2020-04/documents/us-ghg-inventory-2020-main-text.pdf

[23] CARB. 2020. *2020 Edition, California Greenhouse Gas Emission Inventory: 2000 – 2018*. Web: https://ww3.arb.ca.gov/cc/inventory/pubs/reports/2000_2018/ghg_inventory_trends_00-18.pdf

[24] BAAQMD. 2015. *Bay Area Emissions Inventory Summary Report: Greenhouse Gases Base Year 2011*. January. Web: http://www.baaqmd.gov/~/media/files/planning-and-research/emission-inventory/by2011_ghgsummary.pdf accessed Nov. 26, 2019.

[25] City of Milpitas, *Climate Action Plan – A Qualified Greenhouse Gas Reduction Strategy*, May 2013. Web: https://www.ci.milpitas.ca.gov/_pdfs/Climate_ActionPlan.pdf

[26] TASP DEIR available at https://www.ci.milpitas.ca.gov/_pdfs/plan_eir_tasp_draft.pdf

Accordingly, the SEIR examines the Plan in the context of the 2007 EIR focusing on the changes to environmental impacts and mitigation that would result from its revisions.

The 2007 TASP EIS identified several Plan policies that would reduce GHG emissions. They include:

Policy 3.16: Establish and implement a travel demand management (TDM) program in order to encourage alternate modes of travel and thereby reduce automobile trips.

Policy 3.21: Provide continuous pedestrian sidewalks and safe bike travel routes throughout the entire Transit Area and within development projects.

Policy 3.28: Provide continuous bicycle circulation through the project site and to adjacent areas by closing existing gaps in bicycle lanes and bicycle routes.

Policy 3.28: Provide continuous bicycle circulation through the project site and to adjacent areas by closing existing gaps in bicycle lanes and bicycle routes.

By implementing the TSAP and subsequent MMSP, GHG emissions in the city will be reduced by reducing VMT in the area and encouraging walking, biking, and use of public transportation.

BAAQMD Significance Thresholds

For quantified emissions, the BAAQMD's CEQA Air Quality Guidelines recommended a GHG threshold of 1,100 metric tons or 4.6 metric tons (MT) per capita. These thresholds were developed based on meeting the 2020 GHG targets set in the scoping plan that addressed AB 32. Development of the project would occur beyond 2020, so a threshold that addresses a future target is appropriate. Although BAAQMD has not published a quantified threshold for 2030 yet, this assessment uses a bright-line threshold of 660 MT CO_{2e}/year based on the GHG reduction goals of EO B-30-15. The 2030 bright-line threshold of 660 MT CO_{2e}/year is a 40 percent reduction of the 2020 1,100 MT CO_{2e}/year threshold.

Impact GHG-1: Generate greenhouse gas emissions, either directly or indirectly, that may have a significant impact on the environment?

GHG emissions associated with development of the proposed project would occur over the short-term from construction activities, consisting primarily of emissions from equipment exhaust and worker and vendor trips. There would also be long-term operational emissions associated with vehicular traffic on the new bridge and roadway connection. Emissions for the proposed project are discussed below and were analyzed using the methodology recommended in the BAAQMD CEQA Air Quality Guidelines.

Emissions Modeling

Both RCEM and CalEEMod were used to predict GHG emissions from construction and operation of the new roadway connection as previously described in Impact AIR-1. The project's daily traffic

estimate and other project-specific information were input to the emissions models, as previously described. RCEM and CalEEMod outputs are included in *Attachment 2*.

Existing Uses

A CalEEMod run was developed to estimate GHG emissions from the existing land use. The project land use types, sizes, and other project-specific information were input to the model, as previously described. CalEEMod output is included in *Attachment 2*.

Construction Emissions

GHG emissions associated with construction were computed to be 608 MT of CO_2e for the 18-month construction period. These are the emissions from on-site operation of construction equipment, vendor and hauling truck trips, and worker trips. Neither the City nor BAAQMD have an adopted threshold of significance for construction related GHG emissions, though BAAQMD recommends quantifying emissions and disclosing that GHG emissions would occur during construction. BAAQMD also encourages the incorporation of best management practices to reduce GHG emissions during construction where feasible and applicable.

Operational Emissions

The EMFAC2021 and CT-EMFAC2017 emissions models, along with the projected AADT for the new connection were used to estimate daily emissions associated with operation of the proposed project. As shown in Table 10, the net annual emissions resulting from operation of the proposed project are predicted to be a reduction of 353 MT of CO_{2e} in 2030. As shown in Table 10, the project would not exceed the 660 MT CO_2e/year bright-line threshold in 2024 or 2030. Therefore, the project would not be significant for GHG emissions.

Table 10. Annual Project GHG Emissions (CO_2e) in Metric Tons

Source Category	**Existing Use** (MT CO2e/yr)	**Proposed Project** (MT CO2e/yr)
	2030	**2030**
Area	0.0	NA
Energy Consumption	106.8	NA
Mobile	227.5	10.3
Solid Waste Generation	19.3	NA
Water Usage	9.7	NA
Total Emissions (MT CO2e/yr)	363.3	10.3
Net Emissions Decrease (MT CO_2e/yr)	353.1	
Bright-Line Significance Threshold	***660 MT CO_2e/year***	
Exceed threshold?	*No*	

Impact GHG-2: Conflict with an applicable plan, policy, or regulation adopted for the purpose of reducing the emissions of greenhouse gases?

The proposed project would not conflict or otherwise interfere with the statewide GHG reduction measures identified in CARB's Scoping Plan. Vehicles using the new connection would be subject to CARB emissions standards which are projected to reduce the amount of GHGs emitted in future. The project would also reduce vehicle miles traveled in the area by providing a more direct travel route from new high-density residential areas to major roadways and transit centers. The project would also facilitate biking and walking trips to the nearby transit centers.

Supporting Documentation

Attachment 1 is the methodology used to compute community risk impacts, including the methods to compute lifetime cancer risk from exposure to project emissions.

Attachment 2 includes the RCEM and CalEEMod modeling assumptions and outputs for project construction criteria air pollutant and GHG emissions. The operational outputs for existing uses are also included in this attachment.

Attachment 3 includes the traffic volumes, lengths, and EMFAC2021/CT-EMFAC2017 emissions factors used to estimate emissions from operation of the project The input files for these calculations are voluminous and are available upon request in digital format.

Attachment 4 is the project's construction and operations health risk assessment. AERMOD dispersion modeling files for this assessment, which are quite voluminous, are available upon request and would be provided in digital format.

Attachment 5 includes the major roadway and stationary source emissions information.

Attachment 6 includes the Cumulative Community Health Risk Impacts.

Attachment 1: Health Risk Calculation Methodology

A health risk assessment (HRA) for exposure to Toxic Air Contaminates (TACs) requires the application of a risk characterization model to the results from the air dispersion model to estimate potential health risk at each sensitive receptor location. The State of California Office of Environmental Health Hazard Assessment (OEHHA) and California Air Resources Board (CARB) develop recommended methods for conducting health risk assessments. The most recent OEHHA risk assessment guidelines were published in February of 2015.[27] These guidelines incorporate substantial changes designed to provide for enhanced protection of children, as required by State law, compared to previous published risk assessment guidelines. CARB has provided additional guidance on implementing OEHHA's recommended methods.[28] This HRA used the 2015 OEHHA risk assessment guidelines and CARB guidance. The BAAQMD has adopted recommended procedures for applying the newest OEHHA guidelines as part of Regulation 2, Rule 5: New Source Review of Toxic Air Contaminants.[29] Exposure parameters from the OEHHA guidelines and the recent BAAQMD HRA Guidelines were used in this evaluation.

Cancer Risk

Potential increased cancer risk from inhalation of TACs is calculated based on the TAC concentration over the period of exposure, inhalation dose, the TAC cancer potency factor, and an age sensitivity factor to reflect the greater sensitivity of infants and children to cancer causing TACs. The inhalation dose depends on a person's breathing rate, exposure time and frequency and duration of exposure. These parameters vary depending on the age, or age range, of the persons being exposed and whether the exposure is considered to occur at a residential location or other sensitive receptor location.

The current OEHHA guidance recommends that cancer risk be calculated by age groups to account for different breathing rates and sensitivity to TACs. Specifically, they recommend evaluating risks for the third trimester of pregnancy to age zero, ages zero to less than two (infant exposure), ages two to less than 16 (child exposure), and ages 16 to 70 (adult exposure). Age sensitivity factors (ASFs) associated with the different types of exposure are an ASF of 10 for the third trimester and infant exposures, an ASF of 3 for a child exposure, and an ASF of 1 for an adult exposure. Also associated with each exposure type are different breathing rates, expressed as liters per kilogram of body weight per day (L/kg-day) or liters per kilogram of body weight per 8-hour period for the case of worker or school child exposures. As recommended by the BAAQMD for residential exposures, 95th percentile breathing rates are used for the third trimester and infant exposures, and 80th percentile breathing rates for child and adult exposures. For children at schools and daycare facilities, BAAQMD recommends using the 95th percentile 8-hour breathing rates. Additionally, CARB and the BAAQMD recommend the use of a residential exposure duration of 30 years for sources with long-term emissions (e.g., roadways). For workers, assumed to be adults,

[27] OEHHA, 2015. *Air Toxics Hot Spots Program Risk Assessment Guidelines, The Air Toxics Hot Spots Program Guidance Manual for Preparation of Health Risk Assessments*. Office of Environmental Health Hazard Assessment. February.
[28] CARB, 2015. *Risk Management Guidance for Stationary Sources of Air Toxics*. July 23.
[29] BAAQMD, 2016. *BAAQMD Air Toxics NSR Program Health Risk Assessment (HRA) Guidelines*. December 2016.

a 25-year exposure period is recommended by the BAAQMD. For school children a 9-year exposure period is recommended by the BAAQMD.

Under previous OEHHA and BAAQMD HRA guidance, residential receptors are assumed to be at their home 24 hours a day, or 100 percent of the time. In the 2015 Risk Assessment Guidance, OEHHA includes adjustments to exposure duration to account for the fraction of time at home (FAH), which can be less than 100 percent of the time, based on updated population and activity statistics. The FAH factors are age-specific and are: 0.85 for third trimester of pregnancy to less than 2 years old, 0.72 for ages 2 to less than 16 years, and 0.73 for ages 16 to 70 years. Use of the FAH factors is allowed by the BAAQMD if there are no schools in the project vicinity have a cancer risk of one in a million or greater assuming 100 percent exposure (FAH = 1.0).

Functionally, cancer risk is calculated using the following parameters and formulas:

Cancer Risk (per million) = $CPF \times Inhalation\ Dose \times ASF \times ED/AT \times FAH \times 10^{6}$

Where:

CPF = Cancer potency factor $(mg/kg\text{-}day)^{-1}$
ASF = Age sensitivity factor for specified age group
ED = Exposure duration (years)
AT = Averaging time for lifetime cancer risk (years)
FAH = Fraction of time spent at home (unitless)

Inhalation Dose = $C_{air} \times DBR^{*} \times A \times (EF/365) \times 10^{-6}$

Where:

C_{air} = concentration in air ($\mu g/m^3$)
DBR = daily breathing rate (L/kg body weight-day)
8HrBR = 8-hour breathing rate (L/kg body weight-8 hours)
A = Inhalation absorption factor
EF = Exposure frequency (days/year)
10^{-6} = Conversion factor

* An 8-hour breathing rate (8HrBR) is used for worker and school child exposures.

The health risk parameters used in this evaluation are summarized as follows:

Parameter	*Exposure Type →*	Infant		Child	Adult
	Age Range →	3rd Trimester	0<2	2 < 16	16 - 30
DPM Cancer Potency Factor $(mg/kg\text{-}day)^{-1}$		1.10E+00	1.10E+00	1.10E+00	1.10E+00
Daily Breathing Rate (L/kg-day) 80th Percentile Rate		273	758	572	261
Daily Breathing Rate (L/kg-day) 95th Percentile Rate		361	1,090	745	335
8-hour Breathing Rate (L/kg-8 hours) 95th Percentile Rate		-	1,200	520	240
Inhalation Absorption Factor		1	1	1	1
Averaging Time (years)		70	70	70	70
Exposure Duration (years)		0.25	2	14	14*
Exposure Frequency (days/year)		350	350	350	350*
Age Sensitivity Factor		10	10	3	1
Fraction of Time at Home (FAH)		0.85-1.0	0.85-1.0	0.72-1.0	0.73*

Non-Cancer Hazards

Non-cancer health risk is usually determined by comparing the predicted level of exposure to a chemical to the level of exposure that is not expected to cause any adverse effects (reference exposure level), even to the most susceptible people. Potential non-cancer health hazards from TAC exposure are expressed in terms of a hazard index (HI), which is the ratio of the TAC concentration to a reference exposure level (REL). OEHHA has defined acceptable concentration levels for contaminants that pose non-cancer health hazards. TAC concentrations below the REL are not expected to cause adverse health impacts, even for sensitive individuals. The total HI is calculated as the sum of the HIs for each TAC evaluated and the total HI is compared to the BAAQMD significance thresholds to determine whether a significant non-cancer health impact from a project would occur.

Typically, for residential projects located near roadways with substantial TAC emissions, the primary TAC of concern with non-cancer health effects is diesel particulate matter (DPM). For DPM, the chronic inhalation REL is 5 micrograms per cubic meter ($\mu g/m^3$).

Annual $PM_{2.5}$ Concentrations

While not a TAC, fine particulate matter ($PM_{2.5}$) has been identified by the BAAQMD as a pollutant with potential non-cancer health effects that should be included when evaluating potential community health impacts under the California Environmental Quality Act (CEQA). The thresholds of significance for $PM_{2.5}$ (project level and cumulative) are in terms of an increase in the annual average concentration. When considering $PM_{2.5}$ impacts, the contribution from all sources of $PM_{2.5}$ emissions should be included. For projects with potential impacts from nearby local roadways, the $PM_{2.5}$ impacts should include those from vehicle exhaust emissions, $PM_{2.5}$ generated from vehicle tire and brake wear, and fugitive emissions from re-suspended dust on the roads.

Attachment 2: RCEM and CalEEMod Modeling Output

Milpitas Blvd Bridge and Roadway Project - Santa Clara County, Annual

EMFAC Off-Model Adjustment Factors for Gasoline Light Duty Vehicle to Account for the SAFE Vehicle Rule Applied

Milpitas Blvd Bridge and Roadway Project

Santa Clara County, Annual

1.0 Project Characteristics

1.1 Land Usage

Land Uses	Size	Metric	Lot Acreage	Floor Surface Area	Population
Other Asphalt Surfaces	1.06	Acre	1.06	46,173.60	0

1.2 Other Project Characteristics

Urbanization	Urban	**Wind Speed (m/s)**	2.2	**Precipitation Freq (Days)**	58
Climate Zone	4			**Operational Year**	2024
Utility Company	Pacific Gas and Electric Company				
CO2 Intensity (lb/MWhr)	203.98	**CH4 Intensity (lb/MWhr)**	0.033	**N2O Intensity (lb/MWhr)**	0.004

1.3 User Entered Comments & Non-Default Data

Project Characteristics - Roadway/Bridge Project with building Demo. RCEM used for roadway and bridge construction emissions. CalEEMod used for estimating emissions from building Demo

Land Use - Using CalEEMod for Demo Emissions only

Construction Phase - Demo Emissions only

Off-road Equipment - Demo Only

Off-road Equipment - Demo Only

Off-road Equipment - Demo Emissions only, CalEEMod Default only

Off-road Equipment - Demo Only

Off-road Equipment - Demo Only

Off-road Equipment - Demo Only

Trips and VMT - Demo Only

Demolition - Existing office building to be demo-ed to make way for roadway connectivity project. Existing Building: approximate 42,000 SF. Existing Pavement: approximate 70,000 SF

Grading -

Date: 11/2/2021 4:49 PM

Milpitas Blvd Bridge and Roadway Project - Santa Clara County, Annual

EMFAC Off-Model Adjustment Factors for Gasoline Light Duty Vehicle to Account for the SAFE Vehicle Rule Applied

Construction Off-road Equipment Mitigation - T4 mitigation, Consistent with RCEM analysis. Enhanced Fug Dust Mit

Table Name	Column Name	Default Value	New Value
tblConstDustMitigation	WaterUnpavedRoadMoistureContent	0	12
tblConstDustMitigation	WaterUnpavedRoadVehicleSpeed	0	15
tblConstEquipMitigation	NumberOfEquipmentMitigated	0.00	1.00
tblConstEquipMitigation	NumberOfEquipmentMitigated	0.00	1.00
tblConstEquipMitigation	NumberOfEquipmentMitigated	0.00	1.00
tblConstEquipMitigation	NumberOfEquipmentMitigated	0.00	1.00
tblConstEquipMitigation	Tier	No Change	Tier 4 Final
tblConstEquipMitigation	Tier	No Change	Tier 4 Final
tblConstEquipMitigation	Tier	No Change	Tier 4 Final
tblConstEquipMitigation	Tier	No Change	Tier 4 Final
tblConstructionPhase	NumDays	10.00	0.00
tblConstructionPhase	NumDays	200.00	0.00
tblConstructionPhase	NumDays	4.00	0.00
tblConstructionPhase	NumDays	10.00	0.00
tblConstructionPhase	NumDays	2.00	0.00
tblOffRoadEquipment	OffRoadEquipmentUnitAmount	1.00	0.00
tblOffRoadEquipment	OffRoadEquipmentUnitAmount	1.00	0.00
tblOffRoadEquipment	OffRoadEquipmentUnitAmount	1.00	0.00
tblOffRoadEquipment	OffRoadEquipmentUnitAmount	1.00	0.00
tblOffRoadEquipment	OffRoadEquipmentUnitAmount	1.00	0.00
tblOffRoadEquipment	OffRoadEquipmentUnitAmount	1.00	0.00
tblOffRoadEquipment	OffRoadEquipmentUnitAmount	1.00	0.00
tblOffRoadEquipment	OffRoadEquipmentUnitAmount	1.00	0.00
tblOffRoadEquipment	OffRoadEquipmentUnitAmount	1.00	0.00
tblOffRoadEquipment	OffRoadEquipmentUnitAmount	1.00	0.00
tblOffRoadEquipment	OffRoadEquipmentUnitAmount	1.00	0.00

EMFAC Off-Model Adjustment Factors for Gasoline Light Duty Vehicle to Account for the SAFE Vehicle Rule Applied

tblOffRoadEquipment	OffRoadEquipmentUnitAmount	1.00	0.00
tblOffRoadEquipment	OffRoadEquipmentUnitAmount	1.00	0.00
tblOffRoadEquipment	OffRoadEquipmentUnitAmount	3.00	1.00
tblOffRoadEquipment	OffRoadEquipmentUnitAmount	2.00	0.00
tblOffRoadEquipment	OffRoadEquipmentUnitAmount	1.00	0.00
tblOffRoadEquipment	OffRoadEquipmentUnitAmount	1.00	0.00
tblOffRoadEquipment	OffRoadEquipmentUnitAmount	3.00	0.00
tblOffRoadEquipment	UsageHours	6.00	0.00
tblOffRoadEquipment	UsageHours	6.00	0.00
tblOffRoadEquipment	UsageHours	6.00	0.00
tblOffRoadEquipment	UsageHours	6.00	0.00
tblOffRoadEquipment	UsageHours	8.00	0.00
tblOffRoadEquipment	UsageHours	8.00	0.00
tblOffRoadEquipment	UsageHours	8.00	0.00
tblOffRoadEquipment	UsageHours	6.00	0.00
tblOffRoadEquipment	UsageHours	8.00	0.00
tblOffRoadEquipment	UsageHours	7.00	0.00
tblOffRoadEquipment	UsageHours	8.00	0.00
tblOffRoadEquipment	UsageHours	7.00	0.00
tblOffRoadEquipment	UsageHours	6.00	0.00
tblOffRoadEquipment	UsageHours	7.00	0.00
tblOffRoadEquipment	UsageHours	8.00	0.00
tblOffRoadEquipment	UsageHours	8.00	0.00
tblOffRoadEquipment	UsageHours	8.00	0.00
tblTripsAndVMT	VendorTripNumber	8.00	0.00
tblTripsAndVMT	WorkerTripNumber	19.00	0.00
tblTripsAndVMT	WorkerTripNumber	4.00	0.00

2.0 Emissions Summary

Milpitas Blvd Bridge and Roadway Project - Santa Clara County, Annual

EMFAC Off-Model Adjustment Factors for Gasoline Light Duty Vehicle to Account for the SAFE Vehicle Rule Applied

2.1 Overall Construction

Unmitigated Construction

	ROG	NOx	CO	SO2	Fugitive PM10	Exhaust PM10	PM10 Total	Fugitive PM2.5	Exhaust PM2.5	PM2.5 Total	Bio- CO2	NBio- CO2	Total CO2	CH4	N2O	CO2e
Year	tons/yr										MT/yr					
2023	0.0144	0.1627	0.1328	3.9000e-004	0.0602	6.2900e-003	0.0665	9.7400e-003	5.9000e-003	0.0157	0.0000	36.0039	36.0039	5.5800e-003	2.4300e-003	36.8685
2024	0.0000	0.0000	0.0000	0.0000	0.0000	0.0000	0.0000	0.0000	0.0000	0.0000	0.0000	0.0000	0.0000	0.0000	0.0000	0.0000
Maximum	**0.0144**	**0.1627**	**0.1328**	**3.9000e-004**	**0.0602**	**6.2900e-003**	**0.0665**	**9.7400e-003**	**5.9000e-003**	**0.0157**	**0.0000**	**36.0039**	**36.0039**	**5.5800e-003**	**2.4300e-003**	**36.8685**

Mitigated Construction

	ROG	NOx	CO	SO2	Fugitive PM10	Exhaust PM10	PM10 Total	Fugitive PM2.5	Exhaust PM2.5	PM2.5 Total	Bio- CO2	NBio- CO2	Total CO2	CH4	N2O	CO2e
Year	tons/yr										MT/yr					
2023	3.4700e-003	0.0464	0.1498	3.9000e-004	0.0266	6.4000e-004	0.0273	3.0300e-003	6.3000e-004	3.6600e-003	0.0000	36.0039	36.0039	5.5800e-003	2.4300e-003	36.8684
2024	0.0000	0.0000	0.0000	0.0000	0.0000	0.0000	0.0000	0.0000	0.0000	0.0000	0.0000	0.0000	0.0000	0.0000	0.0000	0.0000
Maximum	**3.4700e-003**	**0.0464**	**0.1498**	**3.9000e-004**	**0.0266**	**6.4000e-004**	**0.0273**	**3.0300e-003**	**6.3000e-004**	**3.6600e-003**	**0.0000**	**36.0039**	**36.0039**	**5.5800e-003**	**2.4300e-003**	**36.8684**

	ROG	NOx	CO	SO2	Fugitive PM10	Exhaust PM10	PM10 Total	Fugitive PM2.5	Exhaust PM2.5	PM2.5 Total	Bio- CO2	NBio-CO2	Total CO2	CH4	N20	CO2e

Milpitas Blvd Bridge and Roadway Project - Santa Clara County, Annual

EMFAC Off-Model Adjustment Factors for Gasoline Light Duty Vehicle to Account for the SAFE Vehicle Rule Applied

Percent Reduction	**75.85**	**71.48**	**-12.80**	**0.00**	**55.83**	**89.83**	**59.04**	**68.89**	**89.32**	**76.61**	**0.00**	**0.00**	**0.00**	**0.00**	**0.00**	**0.00**

Quarter	Start Date	End Date	Maximum Unmitigated ROG + NOX (tons/quarter)	Maximum Mitigated ROG + NOX (tons/quarter)
1	**10-16-2023**	**1-15-2024**	0.1651	0.0469
		Highest	0.1651	0.0469

2.2 Overall Operational

Unmitigated Operational

	ROG	NOx	CO	SO2	Fugitive PM10	Exhaust PM10	PM10 Total	Fugitive PM2.5	Exhaust PM2.5	PM2.5 Total	Bio- CO2	NBio- CO2	Total CO2	CH4	N2O	CO2e
Category	tons/yr										MT/yr					
Area	3.9500e-003	0.0000	1.0000e-005	0.0000		0.0000	0.0000		0.0000	0.0000	0.0000	2.0000e-005	2.0000e-005	0.0000	0.0000	2.0000e-005
Energy	0.0000	0.0000	0.0000	0.0000		0.0000	0.0000		0.0000	0.0000	0.0000	0.0000	0.0000	0.0000	0.0000	0.0000
Mobile	0.0000	0.0000	0.0000	0.0000	0.0000	0.0000	0.0000	0.0000	0.0000	0.0000	0.0000	0.0000	0.0000	0.0000	0.0000	0.0000
Waste						0.0000	0.0000		0.0000	0.0000	0.0000	0.0000	0.0000	0.0000	0.0000	0.0000
Water						0.0000	0.0000		0.0000	0.0000	0.0000	0.0000	0.0000	0.0000	0.0000	0.0000
Total	**3.9500e-003**	**0.0000**	**1.0000e-005**	**0.0000**	**0.0000**	**0.0000**	**0.0000**	**0.0000**	**0.0000**	**0.0000**	**0.0000**	**2.0000e-005**	**2.0000e-005**	**0.0000**	**0.0000**	**2.0000e-005**

Mitigated Operational

	ROG	NOx	CO	SO2	Fugitive PM10	Exhaust PM10	PM10 Total	Fugitive PM2.5	Exhaust PM2.5	PM2.5 Total	Bio- CO2	NBio- CO2	Total CO2	CH4	N2O	CO2e

Milpitas Blvd Bridge and Roadway Project - Santa Clara County, Annual

EMFAC Off-Model Adjustment Factors for Gasoline Light Duty Vehicle to Account for the SAFE Vehicle Rule Applied

Category	tons/yr										MT/yr					
Area	3.9500e-003	0.0000	1.0000e-005	0.0000		0.0000	0.0000		0.0000	0.0000	0.0000	2.0000e-005	2.0000e-005	0.0000	0.0000	2.0000e-005
Energy	0.0000	0.0000	0.0000	0.0000		0.0000	0.0000		0.0000	0.0000	0.0000	0.0000	0.0000	0.0000	0.0000	0.0000
Mobile	0.0000	0.0000	0.0000	0.0000	0.0000	0.0000	0.0000	0.0000	0.0000	0.0000	0.0000	0.0000	0.0000	0.0000	0.0000	0.0000
Waste						0.0000	0.0000		0.0000	0.0000	0.0000	0.0000	0.0000	0.0000	0.0000	0.0000
Water						0.0000	0.0000		0.0000	0.0000	0.0000	0.0000	0.0000	0.0000	0.0000	0.0000
Total	**3.9500e-003**	**0.0000**	**1.0000e-005**	**0.0000**	**0.0000**	**0.0000**	**0.0000**	**0.0000**	**0.0000**	**0.0000**	**0.0000**	**2.0000e-005**	**2.0000e-005**	**0.0000**	**0.0000**	**2.0000e-005**

	ROG	NOx	CO	SO2	Fugitive PM10	Exhaust PM10	PM10 Total	Fugitive PM2.5	Exhaust PM2.5	PM2.5 Total	Bio- CO2	NBio-CO2	Total CO2	CH4	N20	CO2e
Percent Reduction	**0.00**	**0.00**	**0.00**	**0.00**	**0.00**	**0.00**	**0.00**	**0.00**	**0.00**	**0.00**	**0.00**	**0.00**	**0.00**	**0.00**	**0.00**	**0.00**

3.0 Construction Detail

Construction Phase

Phase Number	Phase Name	Phase Type	Start Date	End Date	Num Days Week	Num Days	Phase Description
1	Demolition	Demolition	10/16/2023	11/10/2023	5	20	
2	Site Preparation	Site Preparation	11/11/2023	11/10/2023	5	0	
3	Grading	Grading	11/15/2023	11/14/2023	5	0	
4	Building Construction	Building Construction	11/21/2023	11/20/2023	5	0	
5	Paving	Paving	8/27/2024	8/26/2024	5	0	
6	Architectural Coating	Architectural Coating	9/10/2024	9/9/2024	5	0	

Acres of Grading (Site Preparation Phase): 0

Acres of Grading (Grading Phase): 0

Date: 11/2/2021 4:49 PM

Milpitas Blvd Bridge and Roadway Project - Santa Clara County, Annual

EMFAC Off-Model Adjustment Factors for Gasoline Light Duty Vehicle to Account for the SAFE Vehicle Rule Applied

Acres of Paving: 1.06

Residential Indoor: 0; Residential Outdoor: 0; Non-Residential Indoor: 0; Non-Residential Outdoor: 0; Striped Parking Area: 2,770 (Architectural

OffRoad Equipment

Phase Name	Offroad Equipment Type	Amount	Usage Hours	Horse Power	Load Factor
Demolition	Concrete/Industrial Saws	1	8.00	81	0.73
Demolition	Excavators	1	8.00	158	0.38
Demolition	Rubber Tired Dozers	1	8.00	247	0.40
Demolition	Tractors/Loaders/Backhoes	1	8.00	97	0.37
Site Preparation	Graders	0	0.00	187	0.41
Site Preparation	Rubber Tired Dozers	0	0.00	247	0.40
Site Preparation	Tractors/Loaders/Backhoes	0	0.00	97	0.37
Grading	Graders	0	0.00	187	0.41
Grading	Rubber Tired Dozers	0	0.00	247	0.40
Grading	Tractors/Loaders/Backhoes	0	0.00	97	0.37
Building Construction	Cranes	0	0.00	231	0.29
Building Construction	Forklifts	0	0.00	89	0.20
Building Construction	Generator Sets	0	0.00	84	0.74
Building Construction	Tractors/Loaders/Backhoes	0	0.00	97	0.37
Building Construction	Welders	0	0.00	46	0.45
Paving	Cement and Mortar Mixers	0	0.00	9	0.56
Paving	Pavers	0	0.00	130	0.42
Paving	Paving Equipment	0	0.00	132	0.36
Paving	Rollers	0	0.00	80	0.38
Paving	Tractors/Loaders/Backhoes	0	0.00	97	0.37
Architectural Coating	Air Compressors	0	0.00	78	0.48

Trips and VMT

Milpitas Blvd Bridge and Roadway Project - Santa Clara County, Annual

EMFAC Off-Model Adjustment Factors for Gasoline Light Duty Vehicle to Account for the SAFE Vehicle Rule Applied

Phase Name	Offroad Equipment Count	Worker Trip Number	Vendor Trip Number	Hauling Trip Number	Worker Trip Length	Vendor Trip Length	Hauling Trip Length	Worker Vehicle Class	Vendor Vehicle Class	Hauling Vehicle Class
Demolition	4	10.00	0.00	509.00	10.80	7.30	20.00	LD_Mix	HDT_Mix	HHDT
Site Preparation	0	0.00	0.00	0.00	10.80	7.30	20.00	LD_Mix	HDT_Mix	HHDT
Grading	0	0.00	0.00	0.00	10.80	7.30	20.00	LD_Mix	HDT_Mix	HHDT
Building Construction	0	0.00	0.00	0.00	10.80	7.30	20.00	LD_Mix	HDT_Mix	HHDT
Paving	0	0.00	0.00	0.00	10.80	7.30	20.00	LD_Mix	HDT_Mix	HHDT
Architectural Coating	0	0.00	0.00	0.00	10.80	7.30	20.00	LD_Mix	HDT_Mix	HHDT

3.1 Mitigation Measures Construction

Use Cleaner Engines for Construction Equipment

Replace Ground Cover

Water Exposed Area

Water Unpaved Roads

Reduce Vehicle Speed on Unpaved Roads

3.2 Demolition - 2023

Unmitigated Construction On-Site

	ROG	NOx	CO	SO2	Fugitive PM10	Exhaust PM10	PM10 Total	Fugitive PM2.5	Exhaust PM2.5	PM2.5 Total	Bio- CO2	NBio- CO2	Total CO2	CH4	N2O	CO2e
Category	tons/yr										MT/yr					
Fugitive Dust					0.0551	0.0000	0.0551	8.3500e-003	0.0000	8.3500e-003	0.0000	0.0000	0.0000	0.0000	0.0000	0.0000
Off-Road	0.0136	0.1280	0.1225	2.3000e-004		6.0100e-003	6.0100e-003		5.6300e-003	5.6300e-003	0.0000	20.1517	20.1517	5.0400e-003	0.0000	20.2778
Total	**0.0136**	**0.1280**	**0.1225**	**2.3000e-004**	**0.0551**	**6.0100e-003**	**0.0611**	**8.3500e-003**	**5.6300e-003**	**0.0140**	**0.0000**	**20.1517**	**20.1517**	**5.0400e-003**	**0.0000**	**20.2778**

Date: 11/2/2021 4:49 PM

Milpitas Blvd Bridge and Roadway Project - Santa Clara County, Annual

EMFAC Off-Model Adjustment Factors for Gasoline Light Duty Vehicle to Account for the SAFE Vehicle Rule Applied

Unmitigated Construction Off-Site

	ROG	NOx	CO	SO2	Fugitive PM10	Exhaust PM10	PM10 Total	Fugitive PM2.5	Exhaust PM2.5	PM2.5 Total	Bio- CO2	NBio- CO2	Total CO2	CH4	N2O	CO2e
Category	tons/yr										MT/yr					
Hauling	5.3000e-004	0.0346	8.0200e-003	1.5000e-004	4.3200e-003	2.8000e-004	4.6000e-003	1.1900e-003	2.7000e-004	1.4600e-003	0.0000	15.2408	15.2408	5.2000e-004	2.4200e-003	15.9738
Vendor	0.0000	0.0000	0.0000	0.0000	0.0000	0.0000	0.0000	0.0000	0.0000	0.0000	0.0000	0.0000	0.0000	0.0000	0.0000	0.0000
Worker	2.5000e-004	1.7000e-004	2.2400e-003	1.0000e-005	7.9000e-004	0.0000	8.0000e-004	2.1000e-004	0.0000	2.1000e-004	0.0000	0.6114	0.6114	2.0000e-005	2.0000e-005	0.6168
Total	**7.8000e-004**	**0.0348**	**0.0103**	**1.6000e-004**	**5.1100e-003**	**2.8000e-004**	**5.4000e-003**	**1.4000e-003**	**2.7000e-004**	**1.6700e-003**	**0.0000**	**15.8522**	**15.8522**	**5.4000e-004**	**2.4400e-003**	**16.5906**

Mitigated Construction On-Site

	ROG	NOx	CO	SO2	Fugitive PM10	Exhaust PM10	PM10 Total	Fugitive PM2.5	Exhaust PM2.5	PM2.5 Total	Bio- CO2	NBio- CO2	Total CO2	CH4	N2O	CO2e
Category	tons/yr										MT/yr					
Fugitive Dust					0.0215	0.0000	0.0215	1.6300e-003	0.0000	1.6300e-003	0.0000	0.0000	0.0000	0.0000	0.0000	0.0000
Off-Road	2.6900e-003	0.0116	0.1395	2.3000e-004		3.6000e-004	3.6000e-004		3.6000e-004	3.6000e-004	0.0000	20.1517	20.1517	5.0400e-003	0.0000	20.2778
Total	**2.6900e-003**	**0.0116**	**0.1395**	**2.3000e-004**	**0.0215**	**3.6000e-004**	**0.0219**	**1.6300e-003**	**3.6000e-004**	**1.9900e-003**	**0.0000**	**20.1517**	**20.1517**	**5.0400e-003**	**0.0000**	**20.2778**

Milpitas Blvd Bridge and Roadway Project - Santa Clara County, Annual

EMFAC Off-Model Adjustment Factors for Gasoline Light Duty Vehicle to Account for the SAFE Vehicle Rule Applied

Mitigated Construction Off-Site

	ROG	NOx	CO	SO2	Fugitive PM10	Exhaust PM10	PM10 Total	Fugitive PM2.5	Exhaust PM2.5	PM2.5 Total	Bio- CO2	NBio- CO2	Total CO2	CH4	N2O	CO2e
Category	tons/yr										MT/yr					
Hauling	5.3000e-004	0.0346	8.0200e-003	1.5000e-004	4.3200e-003	2.8000e-004	4.6000e-003	1.1900e-003	2.7000e-004	1.4600e-003	0.0000	15.2408	15.2408	5.2000e-004	2.4200e-003	15.9738
Vendor	0.0000	0.0000	0.0000	0.0000	0.0000	0.0000	0.0000	0.0000	0.0000	0.0000	0.0000	0.0000	0.0000	0.0000	0.0000	0.0000
Worker	2.5000e-004	1.7000e-004	2.2400e-003	1.0000e-005	7.9000e-004	0.0000	8.0000e-004	2.1000e-004	0.0000	2.1000e-004	0.0000	0.6114	0.6114	2.0000e-005	2.0000e-005	0.6168
Total	**7.8000e-004**	**0.0348**	**0.0103**	**1.6000e-004**	**5.1100e-003**	**2.8000e-004**	**5.4000e-003**	**1.4000e-003**	**2.7000e-004**	**1.6700e-003**	**0.0000**	**15.8522**	**15.8522**	**5.4000e-004**	**2.4400e-003**	**16.5906**

3.3 Site Preparation - 2023

Unmitigated Construction On-Site

	ROG	NOx	CO	SO2	Fugitive PM10	Exhaust PM10	PM10 Total	Fugitive PM2.5	Exhaust PM2.5	PM2.5 Total	Bio- CO2	NBio- CO2	Total CO2	CH4	N2O	CO2e
Category	tons/yr										MT/yr					
Fugitive Dust	0.0000	0.0000	0.0000	0.0000	0.0000	0.0000	0.0000	0.0000	0.0000	0.0000	0.0000	0.0000	0.0000	0.0000	0.0000	0.0000
Off-Road	0.0000	0.0000	0.0000	0.0000	0.0000	0.0000	0.0000	0.0000	0.0000	0.0000	0.0000	0.0000	0.0000	0.0000	0.0000	0.0000
Total	**0.0000**	**0.0000**	**0.0000**	**0.0000**	**0.0000**	**0.0000**	**0.0000**	**0.0000**	**0.0000**	**0.0000**	**0.0000**	**0.0000**	**0.0000**	**0.0000**	**0.0000**	**0.0000**

Unmitigated Construction Off-Site

Date: 11/2/2021 4:49 PM

Milpitas Blvd Bridge and Roadway Project - Santa Clara County, Annual

EMFAC Off-Model Adjustment Factors for Gasoline Light Duty Vehicle to Account for the SAFE Vehicle Rule Applied

	ROG	NOx	CO	SO2	Fugitive PM10	Exhaust PM10	PM10 Total	Fugitive PM2.5	Exhaust PM2.5	PM2.5 Total	Bio- CO2	NBio- CO2	Total CO2	CH4	N2O	CO2e
Category	tons/yr										MT/yr					
Hauling	0.0000	0.0000	0.0000	0.0000	0.0000	0.0000	0.0000	0.0000	0.0000	0.0000	0.0000	0.0000	0.0000	0.0000	0.0000	0.0000
Vendor	0.0000	0.0000	0.0000	0.0000	0.0000	0.0000	0.0000	0.0000	0.0000	0.0000	0.0000	0.0000	0.0000	0.0000	0.0000	0.0000
Worker	0.0000	0.0000	0.0000	0.0000	0.0000	0.0000	0.0000	0.0000	0.0000	0.0000	0.0000	0.0000	0.0000	0.0000	0.0000	0.0000
Total	**0.0000**	**0.0000**	**0.0000**	**0.0000**	**0.0000**	**0.0000**	**0.0000**	**0.0000**	**0.0000**	**0.0000**	**0.0000**	**0.0000**	**0.0000**	**0.0000**	**0.0000**	**0.0000**

Mitigated Construction On-Site

	ROG	NOx	CO	SO2	Fugitive PM10	Exhaust PM10	PM10 Total	Fugitive PM2.5	Exhaust PM2.5	PM2.5 Total	Bio- CO2	NBio- CO2	Total CO2	CH4	N2O	CO2e
Category	tons/yr										MT/yr					
Fugitive Dust	0.0000	0.0000	0.0000	0.0000	0.0000	0.0000	0.0000	0.0000	0.0000	0.0000	0.0000	0.0000	0.0000	0.0000	0.0000	0.0000
Off-Road	0.0000	0.0000	0.0000	0.0000	0.0000	0.0000	0.0000	0.0000	0.0000	0.0000	0.0000	0.0000	0.0000	0.0000	0.0000	0.0000
Total	**0.0000**	**0.0000**	**0.0000**	**0.0000**	**0.0000**	**0.0000**	**0.0000**	**0.0000**	**0.0000**	**0.0000**	**0.0000**	**0.0000**	**0.0000**	**0.0000**	**0.0000**	**0.0000**

Mitigated Construction Off-Site

Milpitas Blvd Bridge and Roadway Project - Santa Clara County, Annual

EMFAC Off-Model Adjustment Factors for Gasoline Light Duty Vehicle to Account for the SAFE Vehicle Rule Applied

	ROG	NOx	CO	SO2	Fugitive PM10	Exhaust PM10	PM10 Total	Fugitive PM2.5	Exhaust PM2.5	PM2.5 Total	Bio- CO2	NBio- CO2	Total CO2	CH4	N2O	CO2e
Category	tons/yr										MT/yr					
Hauling	0.0000	0.0000	0.0000	0.0000	0.0000	0.0000	0.0000	0.0000	0.0000	0.0000	0.0000	0.0000	0.0000	0.0000	0.0000	0.0000
Vendor	0.0000	0.0000	0.0000	0.0000	0.0000	0.0000	0.0000	0.0000	0.0000	0.0000	0.0000	0.0000	0.0000	0.0000	0.0000	0.0000
Worker	0.0000	0.0000	0.0000	0.0000	0.0000	0.0000	0.0000	0.0000	0.0000	0.0000	0.0000	0.0000	0.0000	0.0000	0.0000	0.0000
Total	**0.0000**	**0.0000**	**0.0000**	**0.0000**	**0.0000**	**0.0000**	**0.0000**	**0.0000**	**0.0000**	**0.0000**	**0.0000**	**0.0000**	**0.0000**	**0.0000**	**0.0000**	**0.0000**

3.4 Grading - 2023

Unmitigated Construction On-Site

	ROG	NOx	CO	SO2	Fugitive PM10	Exhaust PM10	PM10 Total	Fugitive PM2.5	Exhaust PM2.5	PM2.5 Total	Bio- CO2	NBio- CO2	Total CO2	CH4	N2O	CO2e
Category	tons/yr										MT/yr					
Fugitive Dust	0.0000	0.0000	0.0000	0.0000	0.0000	0.0000	0.0000	0.0000	0.0000	0.0000	0.0000	0.0000	0.0000	0.0000	0.0000	0.0000
Off-Road	0.0000	0.0000	0.0000	0.0000	0.0000	0.0000	0.0000	0.0000	0.0000	0.0000	0.0000	0.0000	0.0000	0.0000	0.0000	0.0000
Total	**0.0000**	**0.0000**	**0.0000**	**0.0000**	**0.0000**	**0.0000**	**0.0000**	**0.0000**	**0.0000**	**0.0000**	**0.0000**	**0.0000**	**0.0000**	**0.0000**	**0.0000**	**0.0000**

Unmitigated Construction Off-Site

Milpitas Blvd Bridge and Roadway Project - Santa Clara County, Annual

EMFAC Off-Model Adjustment Factors for Gasoline Light Duty Vehicle to Account for the SAFE Vehicle Rule Applied

	ROG	NOx	CO	SO2	Fugitive PM10	Exhaust PM10	PM10 Total	Fugitive PM2.5	Exhaust PM2.5	PM2.5 Total	Bio- CO2	NBio- CO2	Total CO2	CH4	N2O	CO2e
Category	tons/yr										MT/yr					
Hauling	0.0000	0.0000	0.0000	0.0000	0.0000	0.0000	0.0000	0.0000	0.0000	0.0000	0.0000	0.0000	0.0000	0.0000	0.0000	0.0000
Vendor	0.0000	0.0000	0.0000	0.0000	0.0000	0.0000	0.0000	0.0000	0.0000	0.0000	0.0000	0.0000	0.0000	0.0000	0.0000	0.0000
Worker	0.0000	0.0000	0.0000	0.0000	0.0000	0.0000	0.0000	0.0000	0.0000	0.0000	0.0000	0.0000	0.0000	0.0000	0.0000	0.0000
Total	**0.0000**	**0.0000**	**0.0000**	**0.0000**	**0.0000**	**0.0000**	**0.0000**	**0.0000**	**0.0000**	**0.0000**	**0.0000**	**0.0000**	**0.0000**	**0.0000**	**0.0000**	**0.0000**

Mitigated Construction On-Site

	ROG	NOx	CO	SO2	Fugitive PM10	Exhaust PM10	PM10 Total	Fugitive PM2.5	Exhaust PM2.5	PM2.5 Total	Bio- CO2	NBio- CO2	Total CO2	CH4	N2O	CO2e
Category	tons/yr										MT/yr					
Fugitive Dust	0.0000	0.0000	0.0000	0.0000	0.0000	0.0000	0.0000	0.0000	0.0000	0.0000	0.0000	0.0000	0.0000	0.0000	0.0000	0.0000
Off-Road	0.0000	0.0000	0.0000	0.0000	0.0000	0.0000	0.0000	0.0000	0.0000	0.0000	0.0000	0.0000	0.0000	0.0000	0.0000	0.0000
Total	**0.0000**	**0.0000**	**0.0000**	**0.0000**	**0.0000**	**0.0000**	**0.0000**	**0.0000**	**0.0000**	**0.0000**	**0.0000**	**0.0000**	**0.0000**	**0.0000**	**0.0000**	**0.0000**

Mitigated Construction Off-Site

Milpitas Blvd Bridge and Roadway Project - Santa Clara County, Annual

EMFAC Off-Model Adjustment Factors for Gasoline Light Duty Vehicle to Account for the SAFE Vehicle Rule Applied

	ROG	NOx	CO	SO2	Fugitive PM10	Exhaust PM10	PM10 Total	Fugitive PM2.5	Exhaust PM2.5	PM2.5 Total	Bio- CO2	NBio- CO2	Total CO2	CH4	N2O	CO2e
Category	tons/yr										MT/yr					
Hauling	0.0000	0.0000	0.0000	0.0000	0.0000	0.0000	0.0000	0.0000	0.0000	0.0000	0.0000	0.0000	0.0000	0.0000	0.0000	0.0000
Vendor	0.0000	0.0000	0.0000	0.0000	0.0000	0.0000	0.0000	0.0000	0.0000	0.0000	0.0000	0.0000	0.0000	0.0000	0.0000	0.0000
Worker	0.0000	0.0000	0.0000	0.0000	0.0000	0.0000	0.0000	0.0000	0.0000	0.0000	0.0000	0.0000	0.0000	0.0000	0.0000	0.0000
Total	**0.0000**	**0.0000**	**0.0000**	**0.0000**	**0.0000**	**0.0000**	**0.0000**	**0.0000**	**0.0000**	**0.0000**	**0.0000**	**0.0000**	**0.0000**	**0.0000**	**0.0000**	**0.0000**

3.5 Building Construction - 2023

Unmitigated Construction On-Site

	ROG	NOx	CO	SO2	Fugitive PM10	Exhaust PM10	PM10 Total	Fugitive PM2.5	Exhaust PM2.5	PM2.5 Total	Bio- CO2	NBio- CO2	Total CO2	CH4	N2O	CO2e
Category	tons/yr										MT/yr					
Off-Road	0.0000	0.0000	0.0000	0.0000	0.0000	0.0000	0.0000	0.0000	0.0000	0.0000	0.0000	0.0000	0.0000	0.0000	0.0000	0.0000
Total	**0.0000**	**0.0000**	**0.0000**	**0.0000**	**0.0000**	**0.0000**	**0.0000**	**0.0000**	**0.0000**	**0.0000**	**0.0000**	**0.0000**	**0.0000**	**0.0000**	**0.0000**	**0.0000**

Unmitigated Construction Off-Site

Milpitas Blvd Bridge and Roadway Project - Santa Clara County, Annual

EMFAC Off-Model Adjustment Factors for Gasoline Light Duty Vehicle to Account for the SAFE Vehicle Rule Applied

	ROG	NOx	CO	SO2	Fugitive PM10	Exhaust PM10	PM10 Total	Fugitive PM2.5	Exhaust PM2.5	PM2.5 Total	Bio- CO2	NBio- CO2	Total CO2	CH4	N2O	CO2e
Category	tons/yr										MT/yr					
Hauling	0.0000	0.0000	0.0000	0.0000	0.0000	0.0000	0.0000	0.0000	0.0000	0.0000	0.0000	0.0000	0.0000	0.0000	0.0000	0.0000
Vendor	0.0000	0.0000	0.0000	0.0000	0.0000	0.0000	0.0000	0.0000	0.0000	0.0000	0.0000	0.0000	0.0000	0.0000	0.0000	0.0000
Worker	0.0000	0.0000	0.0000	0.0000	0.0000	0.0000	0.0000	0.0000	0.0000	0.0000	0.0000	0.0000	0.0000	0.0000	0.0000	0.0000
Total	**0.0000**	**0.0000**	**0.0000**	**0.0000**	**0.0000**	**0.0000**	**0.0000**	**0.0000**	**0.0000**	**0.0000**	**0.0000**	**0.0000**	**0.0000**	**0.0000**	**0.0000**	**0.0000**

Mitigated Construction On-Site

	ROG	NOx	CO	SO2	Fugitive PM10	Exhaust PM10	PM10 Total	Fugitive PM2.5	Exhaust PM2.5	PM2.5 Total	Bio- CO2	NBio- CO2	Total CO2	CH4	N2O	CO2e
Category	tons/yr										MT/yr					
Off-Road	0.0000	0.0000	0.0000	0.0000	0.0000	0.0000	0.0000	0.0000	0.0000	0.0000	0.0000	0.0000	0.0000	0.0000	0.0000	0.0000
Total	**0.0000**	**0.0000**	**0.0000**	**0.0000**	**0.0000**	**0.0000**	**0.0000**	**0.0000**	**0.0000**	**0.0000**	**0.0000**	**0.0000**	**0.0000**	**0.0000**	**0.0000**	**0.0000**

Mitigated Construction Off-Site

	ROG	NOx	CO	SO2	Fugitive PM10	Exhaust PM10	PM10 Total	Fugitive PM2.5	Exhaust PM2.5	PM2.5 Total	Bio- CO2	NBio- CO2	Total CO2	CH4	N2O	CO2e

Milpitas Blvd Bridge and Roadway Project - Santa Clara County, Annual

EMFAC Off-Model Adjustment Factors for Gasoline Light Duty Vehicle to Account for the SAFE Vehicle Rule Applied

Category	tons/yr										MT/yr					
Hauling	0.0000	0.0000	0.0000	0.0000	0.0000	0.0000	0.0000	0.0000	0.0000	0.0000	0.0000	0.0000	0.0000	0.0000	0.0000	0.0000
Vendor	0.0000	0.0000	0.0000	0.0000	0.0000	0.0000	0.0000	0.0000	0.0000	0.0000	0.0000	0.0000	0.0000	0.0000	0.0000	0.0000
Worker	0.0000	0.0000	0.0000	0.0000	0.0000	0.0000	0.0000	0.0000	0.0000	0.0000	0.0000	0.0000	0.0000	0.0000	0.0000	0.0000
Total	**0.0000**	**0.0000**	**0.0000**	**0.0000**	**0.0000**	**0.0000**	**0.0000**	**0.0000**	**0.0000**	**0.0000**	**0.0000**	**0.0000**	**0.0000**	**0.0000**	**0.0000**	**0.0000**

3.6 Paving - 2024

Unmitigated Construction On-Site

	ROG	NOx	CO	SO2	Fugitive PM10	Exhaust PM10	PM10 Total	Fugitive PM2.5	Exhaust PM2.5	PM2.5 Total	Bio- CO2	NBio- CO2	Total CO2	CH4	N2O	CO2e
Category	tons/yr										MT/yr					
Off-Road	0.0000	0.0000	0.0000	0.0000	0.0000	0.0000	0.0000	0.0000	0.0000	0.0000	0.0000	0.0000	0.0000	0.0000	0.0000	0.0000
Paving	0.0000	0.0000	0.0000	0.0000	0.0000	0.0000	0.0000	0.0000	0.0000	0.0000	0.0000	0.0000	0.0000	0.0000	0.0000	0.0000
Total	**0.0000**	**0.0000**	**0.0000**	**0.0000**	**0.0000**	**0.0000**	**0.0000**	**0.0000**	**0.0000**	**0.0000**	**0.0000**	**0.0000**	**0.0000**	**0.0000**	**0.0000**	**0.0000**

Unmitigated Construction Off-Site

	ROG	NOx	CO	SO2	Fugitive PM10	Exhaust PM10	PM10 Total	Fugitive PM2.5	Exhaust PM2.5	PM2.5 Total	Bio- CO2	NBio- CO2	Total CO2	CH4	N2O	CO2e

Date: 11/2/2021 4:49 PM

Milpitas Blvd Bridge and Roadway Project - Santa Clara County, Annual

EMFAC Off-Model Adjustment Factors for Gasoline Light Duty Vehicle to Account for the SAFE Vehicle Rule Applied

Category	tons/yr										MT/yr					
Hauling	0.0000	0.0000	0.0000	0.0000	0.0000	0.0000	0.0000	0.0000	0.0000	0.0000	0.0000	0.0000	0.0000	0.0000	0.0000	0.0000
Vendor	0.0000	0.0000	0.0000	0.0000	0.0000	0.0000	0.0000	0.0000	0.0000	0.0000	0.0000	0.0000	0.0000	0.0000	0.0000	0.0000
Worker	0.0000	0.0000	0.0000	0.0000	0.0000	0.0000	0.0000	0.0000	0.0000	0.0000	0.0000	0.0000	0.0000	0.0000	0.0000	0.0000
Total	**0.0000**	**0.0000**	**0.0000**	**0.0000**	**0.0000**	**0.0000**	**0.0000**	**0.0000**	**0.0000**	**0.0000**	**0.0000**	**0.0000**	**0.0000**	**0.0000**	**0.0000**	**0.0000**

Mitigated Construction On-Site

	ROG	NOx	CO	SO2	Fugitive PM10	Exhaust PM10	PM10 Total	Fugitive PM2.5	Exhaust PM2.5	PM2.5 Total	Bio- CO2	NBio- CO2	Total CO2	CH4	N2O	CO2e
Category	tons/yr										MT/yr					
Off-Road	0.0000	0.0000	0.0000	0.0000	0.0000	0.0000	0.0000	0.0000	0.0000	0.0000	0.0000	0.0000	0.0000	0.0000	0.0000	0.0000
Paving	0.0000	0.0000	0.0000	0.0000	0.0000	0.0000	0.0000	0.0000	0.0000	0.0000	0.0000	0.0000	0.0000	0.0000	0.0000	0.0000
Total	**0.0000**	**0.0000**	**0.0000**	**0.0000**	**0.0000**	**0.0000**	**0.0000**	**0.0000**	**0.0000**	**0.0000**	**0.0000**	**0.0000**	**0.0000**	**0.0000**	**0.0000**	**0.0000**

Mitigated Construction Off-Site

	ROG	NOx	CO	SO2	Fugitive PM10	Exhaust PM10	PM10 Total	Fugitive PM2.5	Exhaust PM2.5	PM2.5 Total	Bio- CO2	NBio- CO2	Total CO2	CH4	N2O	CO2e

Milpitas Blvd Bridge and Roadway Project - Santa Clara County, Annual

EMFAC Off-Model Adjustment Factors for Gasoline Light Duty Vehicle to Account for the SAFE Vehicle Rule Applied

Category	tons/yr										MT/yr					
Hauling	0.0000	0.0000	0.0000	0.0000	0.0000	0.0000	0.0000	0.0000	0.0000	0.0000	0.0000	0.0000	0.0000	0.0000	0.0000	0.0000
Vendor	0.0000	0.0000	0.0000	0.0000	0.0000	0.0000	0.0000	0.0000	0.0000	0.0000	0.0000	0.0000	0.0000	0.0000	0.0000	0.0000
Worker	0.0000	0.0000	0.0000	0.0000	0.0000	0.0000	0.0000	0.0000	0.0000	0.0000	0.0000	0.0000	0.0000	0.0000	0.0000	0.0000
Total	**0.0000**	**0.0000**	**0.0000**	**0.0000**	**0.0000**	**0.0000**	**0.0000**	**0.0000**	**0.0000**	**0.0000**	**0.0000**	**0.0000**	**0.0000**	**0.0000**	**0.0000**	**0.0000**

3.7 Architectural Coating - 2024

Unmitigated Construction On-Site

	ROG	NOx	CO	SO2	Fugitive PM10	Exhaust PM10	PM10 Total	Fugitive PM2.5	Exhaust PM2.5	PM2.5 Total	Bio- CO2	NBio- CO2	Total CO2	CH4	N2O	CO2e
Category	tons/yr										MT/yr					
Archit. Coating	0.0000	0.0000	0.0000	0.0000	0.0000	0.0000	0.0000	0.0000	0.0000	0.0000	0.0000	0.0000	0.0000	0.0000	0.0000	0.0000
Off-Road	0.0000	0.0000	0.0000	0.0000	0.0000	0.0000	0.0000	0.0000	0.0000	0.0000	0.0000	0.0000	0.0000	0.0000	0.0000	0.0000
Total	**0.0000**	**0.0000**	**0.0000**	**0.0000**	**0.0000**	**0.0000**	**0.0000**	**0.0000**	**0.0000**	**0.0000**	**0.0000**	**0.0000**	**0.0000**	**0.0000**	**0.0000**	**0.0000**

Unmitigated Construction Off-Site

	ROG	NOx	CO	SO2	Fugitive PM10	Exhaust PM10	PM10 Total	Fugitive PM2.5	Exhaust PM2.5	PM2.5 Total	Bio- CO2	NBio- CO2	Total CO2	CH4	N2O	CO2e

Milpitas Blvd Bridge and Roadway Project - Santa Clara County, Annual

EMFAC Off-Model Adjustment Factors for Gasoline Light Duty Vehicle to Account for the SAFE Vehicle Rule Applied

Category	tons/yr										MT/yr					
Hauling	0.0000	0.0000	0.0000	0.0000	0.0000	0.0000	0.0000	0.0000	0.0000	0.0000	0.0000	0.0000	0.0000	0.0000	0.0000	0.0000
Vendor	0.0000	0.0000	0.0000	0.0000	0.0000	0.0000	0.0000	0.0000	0.0000	0.0000	0.0000	0.0000	0.0000	0.0000	0.0000	0.0000
Worker	0.0000	0.0000	0.0000	0.0000	0.0000	0.0000	0.0000	0.0000	0.0000	0.0000	0.0000	0.0000	0.0000	0.0000	0.0000	0.0000
Total	**0.0000**	**0.0000**	**0.0000**	**0.0000**	**0.0000**	**0.0000**	**0.0000**	**0.0000**	**0.0000**	**0.0000**	**0.0000**	**0.0000**	**0.0000**	**0.0000**	**0.0000**	**0.0000**

Mitigated Construction On-Site

	ROG	NOx	CO	SO2	Fugitive PM10	Exhaust PM10	PM10 Total	Fugitive PM2.5	Exhaust PM2.5	PM2.5 Total	Bio- CO2	NBio- CO2	Total CO2	CH4	N2O	CO2e
Category	tons/yr										MT/yr					
Archit. Coating	0.0000	0.0000	0.0000	0.0000	0.0000	0.0000	0.0000	0.0000	0.0000	0.0000	0.0000	0.0000	0.0000	0.0000	0.0000	0.0000
Off-Road	0.0000	0.0000	0.0000	0.0000	0.0000	0.0000	0.0000	0.0000	0.0000	0.0000	0.0000	0.0000	0.0000	0.0000	0.0000	0.0000
Total	**0.0000**	**0.0000**	**0.0000**	**0.0000**	**0.0000**	**0.0000**	**0.0000**	**0.0000**	**0.0000**	**0.0000**	**0.0000**	**0.0000**	**0.0000**	**0.0000**	**0.0000**	**0.0000**

Mitigated Construction Off-Site

	ROG	NOx	CO	SO2	Fugitive PM10	Exhaust PM10	PM10 Total	Fugitive PM2.5	Exhaust PM2.5	PM2.5 Total	Bio- CO2	NBio- CO2	Total CO2	CH4	N2O	CO2e

Date: 11/2/2021 4:49 PM

Milpitas Blvd Bridge and Roadway Project - Santa Clara County, Annual

EMFAC Off-Model Adjustment Factors for Gasoline Light Duty Vehicle to Account for the SAFE Vehicle Rule Applied

Category	tons/yr										MT/yr					
Hauling	0.0000	0.0000	0.0000	0.0000	0.0000	0.0000	0.0000	0.0000	0.0000	0.0000	0.0000	0.0000	0.0000	0.0000	0.0000	0.0000
Vendor	0.0000	0.0000	0.0000	0.0000	0.0000	0.0000	0.0000	0.0000	0.0000	0.0000	0.0000	0.0000	0.0000	0.0000	0.0000	0.0000
Worker	0.0000	0.0000	0.0000	0.0000	0.0000	0.0000	0.0000	0.0000	0.0000	0.0000	0.0000	0.0000	0.0000	0.0000	0.0000	0.0000
Total	**0.0000**	**0.0000**	**0.0000**	**0.0000**	**0.0000**	**0.0000**	**0.0000**	**0.0000**	**0.0000**	**0.0000**	**0.0000**	**0.0000**	**0.0000**	**0.0000**	**0.0000**	**0.0000**

Road Construction Emissions Model, Version 9.0.0

Daily Emission Estimates for ->	Milpitas Blvd. Bridge			Total	Exhaust	Fugitive Dust	Total	Exhaust	Fugitive Dust					
Project Phases (Pounds)	**ROG (lbs/day)**	**CO (lbs/day)**	**NOx (lbs/day)**	**PM10 (lbs/day)**	**PM10 (lbs/day)**	**PM10 (lbs/day)**	**PM2.5 (lbs/day)**	**PM2.5 (lbs/day)**	**PM2.5 (lbs/day)**	**SOx (lbs/day)**	**CO2 (lbs/day)**	**CH4 (lbs/day)**	**N2O (lbs/day)**	**CO2e (lbs/day)**
Grubbing/Land Clearing	1.44	10.75	14.90	1.44	0.64	0.80	0.75	0.58	0.17	0.02	2,411.11	0.74	0.02	2,436.70
Grading/Excavation	1.82	15.81	20.39	1.73	0.93	0.80	0.92	0.75	0.17	0.05	5,012.08	0.86	0.29	5,121.34
Drainage/Utilities/Sub-Grade	1.67	14.19	16.54	1.57	0.77	0.80	0.84	0.67	0.17	0.03	3,080.76	0.84	0.04	3,112.56
Paving	1.23	12.26	11.83	0.53	0.53	0.00	0.47	0.47	0.00	0.03	2,880.29	0.79	0.05	2,913.99
Maximum (pounds/day)	3.26	26.56	35.29	3.18	1.58	1.60	1.67	1.34	0.33	0.08	7,423.18	1.64	0.32	7,558.04
Total (tons/construction project)	0.06	0.56	0.59	0.04	0.03	0.01	0.03	0.02	0.00	0.00	136.83	0.04	0.00	138.69

Notes:

Project Start Year ->	2023
Project Length (months) ->	4
Total Project Area (acres) ->	0
Maximum Area Disturbed/Day (acres) ->	0
Water Truck Used? ->	No

	Total Material Imported/Exported Volume (yd3/day)		Daily VMT (miles/day)			
Phase	Soil	Asphalt	Soil Hauling	Asphalt Hauling	Worker Commute	Water Truck
Grubbing/Land Clearing	0	0	0	0	200	0
Grading/Excavation	135	0	420	0	1,120	0
Drainage/Utilities/Sub-Grade	0	0	0	0	720	0
Paving	0	0	0	30	320	0

PM10 and PM2.5 estimates assume 50% control of fugitive dust from watering and associated dust control measures if a minimum number of water trucks are specified.

Total PM10 emissions shown in column F are the sum of exhaust and fugitive dust emissions shown in columns G and H. Total PM2.5 emissions shown in Column I are the sum of exhaust and fugitive dust emissions shown in columns J and K.

CO2e emissions are estimated by multiplying mass emissions for each GHG by its global warming potential (GWP), 1 , 25 and 298 for CO2, CH4 and N2O, respectively. Total CO2e is then estimated by summing CO2e estimates over all GHGs.

Total Emission Estimates by Phase for ->	Milpitas Blvd. Bridge			Total	Exhaust	Fugitive Dust	Total	Exhaust	Fugitive Dust					
Project Phases (Tons for all except CO2e. Metric tonnes for CO2e)	**ROG (tons/phase)**	**CO (tons/phase)**	**NOx (tons/phase)**	**PM10 (tons/phase)**	**PM10 (tons/phase)**	**PM10 (tons/phase)**	**PM2.5 (tons/phase)**	**PM2.5 (tons/phase)**	**PM2.5 (tons/phase)**	**SOx (tons/phase)**	**CO2 (tons/phase)**	**CH4 (tons/phase)**	**N2O (tons/phase)**	**CO2e (MT/phase)**
Grubbing/Land Clearing	0.01	0.05	0.07	0.01	0.00	0.00	0.00	0.00	0.00	0.00	10.61	0.00	0.00	9.73
Grading/Excavation	0.01	0.09	0.11	0.01	0.01	0.00	0.01	0.00	0.00	0.00	27.57	0.00	0.00	25.55
Drainage/Utilities/Sub-Grade	0.00	0.03	0.04	0.00	0.00	0.00	0.00	0.00	0.00	0.00	6.78	0.00	0.00	6.21
Paving	0.04	0.39	0.38	0.02	0.02	0.00	0.01	0.01	0.00	0.00	91.88	0.03	0.00	84.33
Maximum (tons/phase)	0.04	0.39	0.38	0.02	0.02	0.00	0.01	0.01	0.00	0.00	91.88	0.03	0.00	84.33
Total (tons/construction project)	0.06	0.56	0.59	0.04	0.03	0.01	0.03	0.02	0.00	0.00	136.83	0.04	0.00	125.82

PM10 and PM2.5 estimates assume 50% control of fugitive dust from watering and associated dust control measures if a minimum number of water trucks are specified.

Total PM10 emissions shown in column F are the sum of exhaust and fugitive dust emissions shown in columns G and H. Total PM2.5 emissions shown in Column I are the sum of exhaust and fugitive dust emissions shown in columns J and K.

CO2e emissions are estimated by multiplying mass emissions for each GHG by its global warming potential (GWP), 1 , 25 and 298 for CO2, CH4 and N2O, respectively. Total CO2e is then estimated by summing CO2e estimates over all GHGs.

The CO2e emissions are reported as metric tons per phase.

Worker Commute Emissions -RCEM

Emissions	ROG	CO	NOx	PM10	PM2.5	CO2	CO2e
Pounds per day - Grubbing/Land Clearing	0.02974687	0.463082407	0.03841911	0.0204571	0.0084945	141.5687898	142.7087
Tons per const. Period - Grubbing/Land Clearing	0.000130886	0.002037563	0.00016904	9.0011E-05	3.7376E-05	0.622902675	0.627918
Pounds per day - Grading/Excavation	0.166582471	2.593261477	0.21514703	0.11455976	0.04756922	792.7852229	799.1685
Tons per const. Period - Grading/Excavation	0.000916204	0.014262938	0.00118331	0.00063008	0.00026163	4.360318726	4.395427
Pounds per day - Drainage/Utilities/Sub-Grade	0.107088731	1.667096664	0.13830881	0.07364556	0.03058021	509.6476433	513.7512
Tons per const. Period - Drainage/Utilities/Sub-Grade	0.000235595	0.003667613	0.00030428	0.00016202	6.7276E-05	1.121224815	1.130253
Pounds per day - Paving	0.047594992	0.740931851	0.06147058	0.03273136	0.01359121	226.5100637	228.3339
Tons per const. Period - Paving	0.00151828	0.023635726	0.00196091	0.00104413	0.00043356	7.225671032	7.28385
Total tons per construction project	0.002800965	0.043603839	0.00361754	0.00192624	0.00079984	13.33011725	13.43745

SAFE Adjustment Factors for EMFAC2017 Gasoline Light Duty Vehicles

Year	TOG Exhaust	CO Exhaust	NOx Exhaust	PM Exhaust	CO2 Exhaust
2023	1.0007	1.0027	1.0007	1.0032	1.0126

Worker Commute Emissions -SAFE Adjusted

Emissions	ROG	CO	NOx	PM10	PM2.5	CO2	CO2e
Pounds per day - Grubbing/Land Clearing	0.029767693	0.464332729	0.03844601	0.02052256	0.00852169	143.3525566	144.3269
Tons per const. Period - Grubbing/Land Clearing	0.000130978	0.002043064	0.00016916	9.0299E-05	3.7495E-05	0.630751249	0.635038
Pounds per day - Grading/Excavation	0.166699078	2.600263283	0.21529764	0.11492635	0.04772144	802.7743167	808.2305
Tons per const. Period - Grading/Excavation	0.000916845	0.014301448	0.00118414	0.00063209	0.00026247	4.415258742	4.445268
Pounds per day - Drainage/Utilities/Sub-Grade	0.107163693	1.671597825	0.13840562	0.07388123	0.03067807	516.0692036	519.5767
Tons per const. Period - Drainage/Utilities/Sub-Grade	0.00023576	0.003677515	0.00030449	0.00016254	6.7492E-05	1.135352248	1.143069
Pounds per day - Paving	0.047628308	0.742932367	0.06151361	0.0328361	0.0136347	229.3640905	230.923
Tons per const. Period - Paving	0.001519343	0.023699542	0.00196228	0.00104747	0.00043495	7.316714487	7.366444
Total tons per construction project	0.002802926	0.04372157	0.00362008	0.0019324	0.0008024	13.49807673	13.58982

Road Construction Emissions Model, Version 9.0.0
SAFE Adjustments Applied

Daily Emission Estimates for -> Milpitas Blvd. Bridge

Project Phases (Pounds)	ROG (lbs/day)	CO (lbs/day)	NOx (lbs/day)	Total PM10 (lbs/day)	Exhaust PM10 (lbs/day)	Fugitive Dust PM10 (lbs/day)	Total PM2.5 (lbs/day)	Exhaust PM2.5 (lbs/day)	Fugitive Dust PM2.5 (lbs/day)	SOx (lbs/day)	CO2 (lbs/day)	CH4 (lbs/day)	N2O (lbs/day)	CO2e (lbs/day)
Grubbing/Land Clearing	1.44	10.75	14.90	1.44	0.64	0.80	0.75	0.58	0.17	0.02	2,412.89	0.74	0.02	2,438.31
Grading/Excavation	1.82	15.82	20.39	1.73	0.94	0.80	0.92	0.75	0.17	0.05	5,022.06	0.86	0.29	5,130.40
Drainage/Utilities/Sub-Grade	1.67	14.19	16.54	1.57	0.77	0.80	0.84	0.67	0.17	0.03	6.42	0.84	0.04	3,118.38
Paving	1.23	12.26	11.83	0.53	0.53	0.00	0.47	0.47	0.00	0.03	2,883.15	0.79	0.05	2,916.58
Maximum (pounds/day)	3.26	26.56	35.29	3.18	1.58	1.60	1.67	1.34	0.33	0.08	7,423.18	1.64	0.32	7,558.04
Total (tons/construction project)	0.06	0.56	0.59	0.04	0.03	0.01	0.03	0.02	0.00	0.00	137.00	0.04	0.00	138.84

Notes:

Project Start Year ->	2023
Project Length (months) ->	4
Total Project Area (acres) ->	0
Maximum Area Disturbed/Day (acres) ->	0
Water Truck Used? ->	No

	Total Material Imported/Exported Volume (yd3/day)		Daily VMT (miles/day)			
Phase	Soil	Asphalt	Soil Hauling	Asphalt Hauling	Worker Commute	Water Truck
Grubbing/Land Clearing	0	0	0	0	200	0
Grading/Excavation	135	0	420	0	1,120	0
Drainage/Utilities/Sub-Grade	0	0	0	0	720	0
Paving	0	0	0	30	320	0

PM10 and PM2.5 estimates assume 50% control of fugitive dust from watering and associated dust control measures if a minimum number of water trucks are specified.

Total PM10 emissions shown in column F are the sum of exhaust and fugitive dust emissions shown in columns G and H. Total PM2.5 emissions shown in Column I are the sum of exhaust and fugitive dust emissions shown in columns J and K.

CO2e emissions are estimated by multiplying mass emissions for each GHG by its global warming potential (GWP), 1 , 25 and 298 for CO2, CH4 and N2O, respectively. Total CO2e is then estimated by summing CO2e estimates over all GHGs.

Total Emission Estimates by Phase for -> Milpitas Blvd. Bridge

Project Phases (Tons for all except CO2e. Metric tonnes for CO2e)	ROG (tons/phase)	CO (tons/phase)	NOx (tons/phase)	Total PM10 (tons/phase)	Exhaust PM10 (tons/phase)	Fugitive Dust PM10 (tons/phase)	Total PM2.5 (tons/phase)	Exhaust PM2.5 (tons/phase)	Fugitive Dust PM2.5 (tons/phase)	SOx (tons/phase)	CO2 (tons/phase)	CH4 (tons/phase)	N2O (tons/phase)	CO2e (MT/phase)
Grubbing/Land Clearing	0.01	0.05	0.07	0.01	0.00	0.00	0.00	0.00	0.00	0.00	10.62	0.00	0.00	9.73
Grading/Excavation	0.01	0.09	0.11	0.01	0.01	0.00	0.01	0.00	0.00	0.00	27.62	0.00	0.00	25.60
Drainage/Utilities/Sub-Grade	0.00	0.03	0.04	0.00	0.00	0.00	0.00	0.00	0.00	0.00	6.79	0.00	0.00	6.22
Paving	0.04	0.39	0.38	0.02	0.02	0.00	0.01	0.01	0.00	0.00	91.97	0.03	0.00	84.41
Maximum (tons/phase)	0.04	0.39	0.38	0.02	0.02	0.00	0.01	0.01	0.00	0.00	91.88	0.03	0.00	84.33
Total (tons/construction project)	0.06	0.56	0.59	0.04	0.03	0.01	0.03	0.02	0.00	0.00	137.00	0.04	0.00	125.97

PM10 and PM2.5 estimates assume 50% control of fugitive dust from watering and associated dust control measures if a minimum number of water trucks are specified.

Total PM10 emissions shown in column F are the sum of exhaust and fugitive dust emissions shown in columns G and H. Total PM2.5 emissions shown in Column I are the sum of exhaust and fugitive dust emissions shown in columns J and K.

CO2e emissions are estimated by multiplying mass emissions for each GHG by its global warming potential (GWP), 1 , 25 and 298 for CO2, CH4 and N2O, respectively. Total CO2e is then estimated by summing CO2e estimates over all GHGs.

The CO2e emissions are reported as metric tons per phase.

Road Construction Emissions Model, Version 9.0.0

Daily Emission Estimates for ->	Milpitas Blvd. Road Extension			Total	Exhaust	Fugitive Dust	Total	Exhaust	Fugitive Dust					
Project Phases (Pounds)	**ROG (lbs/day)**	**CO (lbs/day)**	**NOx (lbs/day)**	**PM10 (lbs/day)**	**PM10 (lbs/day)**	**PM10 (lbs/day)**	**PM2.5 (lbs/day)**	**PM2.5 (lbs/day)**	**PM2.5 (lbs/day)**	**SOx (lbs/day)**	**CO2 (lbs/day)**	**CH4 (lbs/day)**	**N2O (lbs/day)**	**CO2e (lbs/day)**
Grubbing/Land Clearing	0.66	5.91	7.06	10.30	0.30	10.00	2.34	0.26	2.08	0.02	1,523.91	0.41	0.04	1,545.52
Grading/Excavation	3.10	31.10	32.04	11.38	1.38	10.00	3.29	1.21	2.08	0.07	7,277.87	1.98	0.18	7,380.86
Drainage/Utilities/Sub-Grade	2.46	25.63	23.55	11.00	1.00	10.00	2.99	0.91	2.08	0.05	5,235.69	1.07	0.07	5,284.14
Paving	0.85	12.79	9.05	0.45	0.45	0.00	0.37	0.37	0.00	0.03	2,581.80	0.56	0.12	2,630.46
Maximum (pounds/day)	3.76	38.42	39.11	21.68	1.68	20.00	5.63	1.47	4.16	0.09	8,801.77	2.39	0.22	8,926.38
Total (tons/construction project)	0.19	2.27	1.96	0.58	0.09	0.50	0.18	0.08	0.10	0.00	482.48	0.11	0.01	489.68

Notes:

Project Start Year ->	2023
Project Length (months) ->	12
Total Project Area (acres) ->	1
Maximum Area Disturbed/Day (acres) ->	1
Water Truck Used? ->	Yes

	Total Material Imported/Exported Volume (yd3/day)		Daily VMT (miles/day)			
Phase	Soil	Asphalt	Soil Hauling	Asphalt Hauling	Worker Commute	Water Truck
Grubbing/Land Clearing	0	0	0	0	160	40
Grading/Excavation	48	0	150	0	680	40
Drainage/Utilities/Sub-Grade	0	0	0	0	560	40
Paving	0	0	0	120	400	40

PM10 and PM2.5 estimates assume 50% control of fugitive dust from watering and associated dust control measures if a minimum number of water trucks are specified.

Total PM10 emissions shown in column F are the sum of exhaust and fugitive dust emissions shown in columns G and H. Total PM2.5 emissions shown in Column I are the sum of exhaust and fugitive dust emissions shown in columns J and K.

CO2e emissions are estimated by multiplying mass emissions for each GHG by its global warming potential (GWP), 1 , 25 and 298 for CO2, CH4 and N2O, respectively. Total CO2e is then estimated by summing CO2e estimates over all GHGs.

Total Emission Estimates by Phase for ->	Milpitas Blvd. Road Extension			Total	Exhaust	Fugitive Dust	Total	Exhaust	Fugitive Dust					
Project Phases (Tons for all except CO2e. Metric tonnes for CO2e)	**ROG (tons/phase)**	**CO (tons/phase)**	**NOx (tons/phase)**	**PM10 (tons/phase)**	**PM10 (tons/phase)**	**PM10 (tons/phase)**	**PM2.5 (tons/phase)**	**PM2.5 (tons/phase)**	**PM2.5 (tons/phase)**	**SOx (tons/phase)**	**CO2 (tons/phase)**	**CH4 (tons/phase)**	**N2O (tons/phase)**	**CO2e (MT/phase)**
Grubbing/Land Clearing	0.00	0.03	0.04	0.06	0.00	0.06	0.01	0.00	0.01	0.00	8.38	0.00	0.00	7.71
Grading/Excavation	0.07	0.68	0.70	0.25	0.03	0.22	0.07	0.03	0.05	0.00	160.11	0.04	0.00	147.31
Drainage/Utilities/Sub-Grade	0.05	0.56	0.52	0.24	0.02	0.22	0.07	0.02	0.05	0.00	115.19	0.02	0.00	105.46
Paving	0.07	0.98	0.70	0.03	0.03	0.00	0.03	0.03	0.00	0.00	198.80	0.04	0.01	183.75
Maximum (tons/phase)	0.07	0.98	0.70	0.25	0.03	0.22	0.07	0.03	0.05	0.00	198.80	0.04	0.01	183.75
Total (tons/construction project)	0.19	2.27	1.96	0.58	0.09	0.50	0.18	0.08	0.10	0.00	482.48	0.11	0.01	444.23

PM10 and PM2.5 estimates assume 50% control of fugitive dust from watering and associated dust control measures if a minimum number of water trucks are specified.

Total PM10 emissions shown in column F are the sum of exhaust and fugitive dust emissions shown in columns G and H. Total PM2.5 emissions shown in Column I are the sum of exhaust and fugitive dust emissions shown in columns J and K.

CO2e emissions are estimated by multiplying mass emissions for each GHG by its global warming potential (GWP), 1 , 25 and 298 for CO2, CH4 and N2O, respectively. Total CO2e is then estimated by summing CO2e estimates over all GHGs.

The CO2e emissions are reported as metric tons per phase.

Worker Commute Emissions -RCEM

Emissions	ROG	CO	NOx	PM10	PM2.5	CO2	CO2e
Pounds per day - Grubbing/Land Clearing	0.023797496	0.370465925	0.03073529	0.01636568	0.0067956	113.2550318	114.1669
Tons per const. Period - Grubbing/Land Clearing	0.000130886	0.002037563	0.00016904	9.0011E-05	3.7376E-05	0.622902675	0.627918
Pounds per day - Grading/Excavation	0.097336504	1.51472249	0.12260992	0.06949953	0.02883098	472.9203621	476.6332
Tons per const. Period - Grading/Excavation	0.002141403	0.033323895	0.00269742	0.00152899	0.00063428	10.40424797	10.48593
Pounds per day - Drainage/Utilities/Sub-Grade	0.077112354	1.199536364	0.09455063	0.05719115	0.02370282	382.7223083	385.6495
Tons per const. Period - Drainage/Utilities/Sub-Grade	0.001696472	0.0263898	0.00208011	0.00125821	0.00052146	8.419890782	8.484289
Pounds per day - Paving	0.055080253	0.856811689	0.06753617	0.04085082	0.01693059	273.3730773	275.4639
Tons per const. Period - Paving	0.004241179	0.0659745	0.00520028	0.00314551	0.00130366	21.04972696	21.21072
Total tons per construction project	0.008209941	0.127725757	0.01014686	0.00602272	0.00249677	40.49676838	40.80886

SAFE Adjustment Factors for EMFAC2017 Gasoline Light Duty Vehicles

Year	TOG Exhaust	CO Exhaust	NOx Exhaust	PM Exhaust	CO2 Exhaust
2023	1.0007	1.0027	1.0007	1.0032	1.0126

Worker Commute Emissions -SAFE Adjusted

Emissions	ROG	CO	NOx	PM10	PM2.5	CO2	CO2e
Pounds per day - Grubbing/Land Clearing	0.023814154	0.371466183	0.03075681	0.01641805	0.00681735	114.6820452	115.4615
Tons per const. Period - Grubbing/Land Clearing	0.000130978	0.002043064	0.00016916	9.0299E-05	3.7495E-05	0.630751249	0.635038
Pounds per day - Grading/Excavation	0.097404639	1.518812241	0.12269575	0.06972193	0.02892323	478.8791587	482.0389
Tons per const. Period - Grading/Excavation	0.002142902	0.033413869	0.00269931	0.00153388	0.00063631	10.53534149	10.60486
Pounds per day - Drainage/Utilities/Sub-Grade	0.077166333	1.202775112	0.09461682	0.05737416	0.02377867	387.5446094	390.0242
Tons per const. Period - Drainage/Utilities/Sub-Grade	0.001697659	0.026461052	0.00208157	0.00126223	0.00052313	8.525981406	8.580533
Pounds per day - Paving	0.055118809	0.85912508	0.06758344	0.04098154	0.01698476	276.8175781	278.5887
Tons per const. Period - Paving	0.004244148	0.066152631	0.00520392	0.00315558	0.00130783	21.31495351	21.45133
Total tons per construction project	0.008215688	0.128070617	0.01015396	0.00604199	0.00250476	41.00702766	41.27176

Road Construction Emissions Model, Version 9.0.0
SAFE Adjustments Applied

Daily Emission Estimates for -> Milpitas Blvd. Road Extension

Project Phases (Pounds)	ROG (lbs/day)	CO (lbs/day)	NOx (lbs/day)	Total PM10 (lbs/day)	Exhaust PM10 (lbs/day)	Fugitive Dust PM10 (lbs/day)	Total PM2.5 (lbs/day)	Exhaust PM2.5 (lbs/day)	Fugitive Dust PM2.5 (lbs/day)	SOx (lbs/day)	CO2 (lbs/day)	CH4 (lbs/day)	N2O (lbs/day)	CO2e (lbs/day)
Grubbing/Land Clearing	0.66	5.91	7.06	10.30	0.30	10.00	2.34	0.26	2.08	0.02	1,525.33	0.41	0.04	1,546.82
Grading/Excavation	3.10	31.10	32.04	11.38	1.38	10.00	3.29	1.21	2.08	0.07	7,283.82	1.98	0.18	7,386.26
Drainage/Utilities/Sub-Grade	2.46	25.63	23.55	11.00	1.00	10.00	2.99	0.91	2.08	0.05	4.82	1.07	0.07	5,288.52
Paving	0.85	12.79	9.05	0.45	0.45	0.00	0.37	0.37	0.00	0.03	2,585.24	0.56	0.12	2,633.58
Maximum (pounds/day)	3.76	38.42	39.11	21.68	1.68	20.00	5.63	1.47	4.16	0.09	8,801.77	2.39	0.22	8,926.38
Total (tons/construction project)	0.19	2.27	1.96	0.58	0.09	0.50	0.18	0.08	0.10	0.00	482.99	0.11	0.01	490.14

Notes:

Project Start Year ->	2023
Project Length (months) ->	12
Total Project Area (acres) ->	1
Maximum Area Disturbed/Day (acres) ->	1
Water Truck Used? ->	Yes

	Total Material Imported/Exported Volume (yd3/day)		Daily VMT (miles/day)			
Phase	Soil	Asphalt	Soil Hauling	Asphalt Hauling	Worker Commute	Water Truck
Grubbing/Land Clearing	0	0	0	0	160	40
Grading/Excavation	48	0	150	0	680	40
Drainage/Utilities/Sub-Grade	0	0	0	0	560	40
Paving	0	0	0	120	400	40

PM10 and PM2.5 estimates assume 50% control of fugitive dust from watering and associated dust control measures if a minimum number of water trucks are specified.

Total PM10 emissions shown in column F are the sum of exhaust and fugitive dust emissions shown in columns G and H. Total PM2.5 emissions shown in Column I are the sum of exhaust and fugitive dust emissions shown in columns J and K.

CO2e emissions are estimated by multiplying mass emissions for each GHG by its global warming potential (GWP), 1 , 25 and 298 for CO2, CH4 and N2O, respectively. Total CO2e is then estimated by summing CO2e estimates over all GHGs.

Total Emission Estimates by Phase for -> Milpitas Blvd. Road Extension

Project Phases (Tons for all except CO2e. Metric tonnes for CO2e)	ROG (tons/phase)	CO (tons/phase)	NOx (tons/phase)	Total PM10 (tons/phase)	Exhaust PM10 (tons/phase)	Fugitive Dust PM10 (tons/phase)	Total PM2.5 (tons/phase)	Exhaust PM2.5 (tons/phase)	Fugitive Dust PM2.5 (tons/phase)	SOx (tons/phase)	CO2 (tons/phase)	CH4 (tons/phase)	N2O (tons/phase)	CO2e (MT/phase)
Grubbing/Land Clearing	0.00	0.03	0.04	0.06	0.00	0.06	0.01	0.00	0.01	0.00	8.39	0.00	0.00	7.72
Grading/Excavation	0.07	0.68	0.70	0.25	0.03	0.22	0.07	0.03	0.05	0.00	160.24	0.04	0.00	147.43
Drainage/Utilities/Sub-Grade	0.05	0.56	0.52	0.24	0.02	0.22	0.07	0.02	0.05	0.00	115.29	0.02	0.00	105.56
Paving	0.07	0.99	0.70	0.03	0.03	0.00	0.03	0.03	0.00	0.00	199.06	0.04	0.01	183.99
Maximum (tons/phase)	0.07	0.98	0.70	0.25	0.03	0.22	0.07	0.03	0.05	0.00	198.80	0.04	0.01	183.75
Total (tons/construction project)	0.19	2.27	1.96	0.58	0.09	0.50	0.18	0.08	0.10	0.00	482.99	0.11	0.01	444.69

PM10 and PM2.5 estimates assume 50% control of fugitive dust from watering and associated dust control measures if a minimum number of water trucks are specified.

Total PM10 emissions shown in column F are the sum of exhaust and fugitive dust emissions shown in columns G and H. Total PM2.5 emissions shown in Column I are the sum of exhaust and fugitive dust emissions shown in columns J and K.

CO2e emissions are estimated by multiplying mass emissions for each GHG by its global warming potential (GWP), 1 , 25 and 298 for CO2, CH4 and N2O, respectively. Total CO2e is then estimated by summing CO2e estimates over all GHGs.

The CO2e emissions are reported as metric tons per phase.

Milpitas Blvd. Bridge - Existing Use Ops Analysis - Santa Clara County, Annual

EMFAC Off-Model Adjustment Factors for Gasoline Light Duty Vehicle to Account for the SAFE Vehicle Rule Not Applied

Milpitas Blvd. Bridge - Existing Use Ops Analysis

Santa Clara County, Annual

1.0 Project Characteristics

1.1 Land Usage

Land Uses	Size	Metric	Lot Acreage	Floor Surface Area	Population
General Office Building	41.31	1000sqft	0.95	41,307.00	0
Parking Lot	140.85	1000sqft	3.23	140,850.00	0

1.2 Other Project Characteristics

Urbanization	Urban	**Wind Speed (m/s)**	2.2	**Precipitation Freq (Days)**	58
Climate Zone	4			**Operational Year**	2024
Utility Company	Pacific Gas and Electric Company				
CO2 Intensity (lb/MWhr)	203.98	**CH4 Intensity (lb/MWhr)**	0.033	**N2O Intensity (lb/MWhr)**	0.004

1.3 User Entered Comments & Non-Default Data

Project Characteristics - Analysis of Existing Ops Emissions

Land Use - Emissions Analysis for Existing Ops

Construction Phase - Ops analysis, No construction

Off-road Equipment - Ops Analysis

Off-road Equipment - Ops Analysis

Off-road Equipment - Ops Analysis

Off-road Equipment - Ops Analysis

Off-road Equipment - Ops Analysis

Off-road Equipment - Ops Analysis

Grading -

Trips and VMT - Ops Analysis

Date: 10/20/2021 5:11 PM

Milpitas Blvd. Bridge - Existing Use Ops Analysis - Santa Clara County, Annual

EMFAC Off-Model Adjustment Factors for Gasoline Light Duty Vehicle to Account for the SAFE Vehicle Rule Not Applied

Vehicle Emission Factors - EMFAC2021 EFs

Vehicle Emission Factors -

Vehicle Emission Factors -

Fleet Mix - Fleet Mix based on county vehilcle Pop in EMFAC2021

Water And Wastewater - 100% WWTP, city sewer

Construction Off-road Equipment Mitigation - No Construction

Table Name	Column Name	Default Value	New Value
tblConstructionPhase	NumDays	18.00	0.00
tblConstructionPhase	NumDays	230.00	0.00
tblConstructionPhase	NumDays	20.00	0.00
tblConstructionPhase	NumDays	8.00	0.00
tblConstructionPhase	NumDays	18.00	0.00
tblConstructionPhase	NumDays	5.00	0.00
tblConstructionPhase	PhaseEndDate	5/23/2024	4/29/2024
tblConstructionPhase	PhaseEndDate	4/3/2024	5/17/2023
tblConstructionPhase	PhaseEndDate	4/28/2023	3/31/2023
tblConstructionPhase	PhaseEndDate	5/17/2023	5/5/2023
tblConstructionPhase	PhaseEndDate	4/29/2024	4/3/2024
tblConstructionPhase	PhaseEndDate	5/5/2023	4/28/2023
tblOffRoadEquipment	OffRoadEquipmentUnitAmount	1.00	0.00
tblOffRoadEquipment	OffRoadEquipmentUnitAmount	2.00	0.00
tblOffRoadEquipment	OffRoadEquipmentUnitAmount	1.00	0.00
tblOffRoadEquipment	OffRoadEquipmentUnitAmount	1.00	0.00
tblOffRoadEquipment	OffRoadEquipmentUnitAmount	3.00	0.00
tblOffRoadEquipment	OffRoadEquipmentUnitAmount	1.00	0.00
tblOffRoadEquipment	OffRoadEquipmentUnitAmount	3.00	0.00
tblOffRoadEquipment	OffRoadEquipmentUnitAmount	1.00	0.00
tblOffRoadEquipment	OffRoadEquipmentUnitAmount	1.00	0.00

Milpitas Blvd. Bridge - Existing Use Ops Analysis - Santa Clara County, Annual

EMFAC Off-Model Adjustment Factors for Gasoline Light Duty Vehicle to Account for the SAFE Vehicle Rule Not Applied

tblOffRoadEquipment	OffRoadEquipmentUnitAmount	1.00	0.00
tblOffRoadEquipment	OffRoadEquipmentUnitAmount	2.00	0.00
tblOffRoadEquipment	OffRoadEquipmentUnitAmount	2.00	0.00
tblOffRoadEquipment	OffRoadEquipmentUnitAmount	2.00	0.00
tblOffRoadEquipment	OffRoadEquipmentUnitAmount	1.00	0.00
tblOffRoadEquipment	OffRoadEquipmentUnitAmount	3.00	0.00
tblOffRoadEquipment	OffRoadEquipmentUnitAmount	3.00	0.00
tblOffRoadEquipment	OffRoadEquipmentUnitAmount	3.00	0.00
tblOffRoadEquipment	OffRoadEquipmentUnitAmount	1.00	0.00
tblOffRoadEquipment	OffRoadEquipmentUnitAmount	4.00	0.00
tblOffRoadEquipment	OffRoadEquipmentUnitAmount	1.00	0.00
tblOffRoadEquipment	UsageHours	6.00	0.00
tblOffRoadEquipment	UsageHours	6.00	0.00
tblOffRoadEquipment	UsageHours	8.00	0.00
tblOffRoadEquipment	UsageHours	7.00	0.00
tblOffRoadEquipment	UsageHours	8.00	0.00
tblOffRoadEquipment	UsageHours	8.00	0.00
tblOffRoadEquipment	UsageHours	8.00	0.00
tblOffRoadEquipment	UsageHours	8.00	0.00
tblOffRoadEquipment	UsageHours	8.00	0.00
tblOffRoadEquipment	UsageHours	8.00	0.00
tblOffRoadEquipment	UsageHours	6.00	0.00
tblOffRoadEquipment	UsageHours	6.00	0.00
tblOffRoadEquipment	UsageHours	8.00	0.00
tblOffRoadEquipment	UsageHours	8.00	0.00
tblOffRoadEquipment	UsageHours	8.00	0.00
tblOffRoadEquipment	UsageHours	7.00	0.00
tblOffRoadEquipment	UsageHours	8.00	0.00
tblOffRoadEquipment	UsageHours	8.00	0.00

Milpitas Blvd. Bridge - Existing Use Ops Analysis - Santa Clara County, Annual

EMFAC Off-Model Adjustment Factors for Gasoline Light Duty Vehicle to Account for the SAFE Vehicle Rule Not Applied

tblOffRoadEquipment	UsageHours	8.00	0.00
tblOffRoadEquipment	UsageHours	8.00	0.00
tblTripsAndVMT	VendorTripNumber	30.00	0.00
tblTripsAndVMT	WorkerTripNumber	72.00	0.00
tblTripsAndVMT	WorkerTripNumber	14.00	0.00
tblVehicleEF	HHD	0.02	0.23
tblVehicleEF	HHD	0.05	0.12
tblVehicleEF	HHD	6.33	5.20
tblVehicleEF	HHD	0.40	0.77
tblVehicleEF	HHD	5.9420e-003	6.2600e-004
tblVehicleEF	HHD	1,048.88	832.32
tblVehicleEF	HHD	1,413.90	1,617.13
tblVehicleEF	HHD	0.05	0.02
tblVehicleEF	HHD	0.17	0.13
tblVehicleEF	HHD	0.22	0.26
tblVehicleEF	HHD	7.0000e-006	2.0000e-005
tblVehicleEF	HHD	5.39	4.11
tblVehicleEF	HHD	2.69	1.85
tblVehicleEF	HHD	2.32	2.73
tblVehicleEF	HHD	2.5820e-003	2.1820e-003
tblVehicleEF	HHD	0.06	0.08
tblVehicleEF	HHD	0.04	0.04
tblVehicleEF	HHD	0.02	0.03
tblVehicleEF	HHD	2.4710e-003	2.0820e-003
tblVehicleEF	HHD	0.03	0.03
tblVehicleEF	HHD	8.8830e-003	8.7810e-003
tblVehicleEF	HHD	0.02	0.02
tblVehicleEF	HHD	2.0000e-006	1.9600e-004
tblVehicleEF	HHD	9.3000e-005	5.8000e-005

Milpitas Blvd. Bridge - Existing Use Ops Analysis - Santa Clara County, Annual

EMFAC Off-Model Adjustment Factors for Gasoline Light Duty Vehicle to Account for the SAFE Vehicle Rule Not Applied

tblVehicleEF	HHD	0.43	0.33
tblVehicleEF	HHD	1.0000e-006	0.00
tblVehicleEF	HHD	0.03	0.02
tblVehicleEF	HHD	4.1000e-005	5.2500e-004
tblVehicleEF	HHD	2.0000e-006	0.00
tblVehicleEF	HHD	9.7610e-003	7.2800e-003
tblVehicleEF	HHD	0.01	0.01
tblVehicleEF	HHD	2.0000e-006	1.9600e-004
tblVehicleEF	HHD	9.3000e-005	5.8000e-005
tblVehicleEF	HHD	0.49	0.59
tblVehicleEF	HHD	1.0000e-006	0.00
tblVehicleEF	HHD	0.08	0.14
tblVehicleEF	HHD	4.1000e-005	5.2500e-004
tblVehicleEF	HHD	3.0000e-006	0.00
tblVehicleEF	LDA	1.7200e-003	2.0530e-003
tblVehicleEF	LDA	0.04	0.06
tblVehicleEF	LDA	0.52	0.65
tblVehicleEF	LDA	2.08	2.89
tblVehicleEF	LDA	234.59	246.81
tblVehicleEF	LDA	49.79	63.85
tblVehicleEF	LDA	3.9560e-003	4.1620e-003
tblVehicleEF	LDA	0.02	0.03
tblVehicleEF	LDA	0.03	0.04
tblVehicleEF	LDA	0.16	0.23
tblVehicleEF	LDA	0.04	7.1680e-003
tblVehicleEF	LDA	1.2900e-003	1.1710e-003
tblVehicleEF	LDA	1.6800e-003	1.9100e-003
tblVehicleEF	LDA	0.02	2.5090e-003
tblVehicleEF	LDA	1.1880e-003	1.0780e-003

Milpitas Blvd. Bridge - Existing Use Ops Analysis - Santa Clara County, Annual

EMFAC Off-Model Adjustment Factors for Gasoline Light Duty Vehicle to Account for the SAFE Vehicle Rule Not Applied

tblVehicleEF	LDA	1.5440e-003	1.7560e-003
tblVehicleEF	LDA	0.04	0.27
tblVehicleEF	LDA	0.08	0.08
tblVehicleEF	LDA	0.03	0.00
tblVehicleEF	LDA	6.4090e-003	7.8860e-003
tblVehicleEF	LDA	0.03	0.20
tblVehicleEF	LDA	0.19	0.30
tblVehicleEF	LDA	2.3210e-003	2.4400e-003
tblVehicleEF	LDA	4.9300e-004	6.3100e-004
tblVehicleEF	LDA	0.04	0.27
tblVehicleEF	LDA	0.08	0.08
tblVehicleEF	LDA	0.03	0.00
tblVehicleEF	LDA	9.3170e-003	0.01
tblVehicleEF	LDA	0.03	0.20
tblVehicleEF	LDA	0.21	0.32
tblVehicleEF	LDT1	3.6010e-003	6.2220e-003
tblVehicleEF	LDT1	0.06	0.10
tblVehicleEF	LDT1	0.85	1.42
tblVehicleEF	LDT1	2.26	5.22
tblVehicleEF	LDT1	280.86	327.08
tblVehicleEF	LDT1	60.30	86.29
tblVehicleEF	LDT1	5.8110e-003	9.3750e-003
tblVehicleEF	LDT1	0.03	0.04
tblVehicleEF	LDT1	0.07	0.13
tblVehicleEF	LDT1	0.21	0.38
tblVehicleEF	LDT1	0.04	9.2260e-003
tblVehicleEF	LDT1	1.6380e-003	1.9270e-003
tblVehicleEF	LDT1	2.1080e-003	2.8980e-003
tblVehicleEF	LDT1	0.02	3.2290e-003

Milpitas Blvd. Bridge - Existing Use Ops Analysis - Santa Clara County, Annual

EMFAC Off-Model Adjustment Factors for Gasoline Light Duty Vehicle to Account for the SAFE Vehicle Rule Not Applied

tblVehicleEF	LDT1	1.5070e-003	1.7740e-003
tblVehicleEF	LDT1	1.9380e-003	2.6650e-003
tblVehicleEF	LDT1	0.07	0.60
tblVehicleEF	LDT1	0.15	0.16
tblVehicleEF	LDT1	0.06	0.00
tblVehicleEF	LDT1	0.02	0.03
tblVehicleEF	LDT1	0.08	0.47
tblVehicleEF	LDT1	0.27	0.54
tblVehicleEF	LDT1	2.7790e-003	3.2330e-003
tblVehicleEF	LDT1	5.9700e-004	8.5300e-004
tblVehicleEF	LDT1	0.07	0.60
tblVehicleEF	LDT1	0.15	0.16
tblVehicleEF	LDT1	0.06	0.00
tblVehicleEF	LDT1	0.02	0.04
tblVehicleEF	LDT1	0.08	0.47
tblVehicleEF	LDT1	0.30	0.59
tblVehicleEF	LDT2	2.9320e-003	2.8180e-003
tblVehicleEF	LDT2	0.06	0.08
tblVehicleEF	LDT2	0.73	0.83
tblVehicleEF	LDT2	2.69	3.62
tblVehicleEF	LDT2	301.75	340.73
tblVehicleEF	LDT2	65.36	87.22
tblVehicleEF	LDT2	5.6680e-003	6.0190e-003
tblVehicleEF	LDT2	0.03	0.04
tblVehicleEF	LDT2	0.06	0.07
tblVehicleEF	LDT2	0.25	0.33
tblVehicleEF	LDT2	0.04	8.8660e-003
tblVehicleEF	LDT2	1.3400e-003	1.3330e-003
tblVehicleEF	LDT2	1.7010e-003	2.1080e-003

Milpitas Blvd. Bridge - Existing Use Ops Analysis - Santa Clara County, Annual

EMFAC Off-Model Adjustment Factors for Gasoline Light Duty Vehicle to Account for the SAFE Vehicle Rule Not Applied

tblVehicleEF	LDT2	0.02	3.1030e-003
tblVehicleEF	LDT2	1.2340e-003	1.2260e-003
tblVehicleEF	LDT2	1.5640e-003	1.9380e-003
tblVehicleEF	LDT2	0.06	0.29
tblVehicleEF	LDT2	0.12	0.08
tblVehicleEF	LDT2	0.06	0.00
tblVehicleEF	LDT2	0.01	0.01
tblVehicleEF	LDT2	0.06	0.21
tblVehicleEF	LDT2	0.28	0.38
tblVehicleEF	LDT2	2.9850e-003	3.3680e-003
tblVehicleEF	LDT2	6.4700e-004	8.6200e-004
tblVehicleEF	LDT2	0.06	0.29
tblVehicleEF	LDT2	0.12	0.08
tblVehicleEF	LDT2	0.06	0.00
tblVehicleEF	LDT2	0.02	0.02
tblVehicleEF	LDT2	0.06	0.21
tblVehicleEF	LDT2	0.31	0.42
tblVehicleEF	LHD1	4.9880e-003	5.3690e-003
tblVehicleEF	LHD1	7.8580e-003	8.1950e-003
tblVehicleEF	LHD1	0.01	0.02
tblVehicleEF	LHD1	0.18	0.20
tblVehicleEF	LHD1	0.71	0.90
tblVehicleEF	LHD1	1.05	2.16
tblVehicleEF	LHD1	8.86	8.72
tblVehicleEF	LHD1	779.34	782.62
tblVehicleEF	LHD1	11.55	17.84
tblVehicleEF	LHD1	7.4200e-004	6.4000e-004
tblVehicleEF	LHD1	0.04	0.04
tblVehicleEF	LHD1	0.02	0.04

Milpitas Blvd. Bridge - Existing Use Ops Analysis - Santa Clara County, Annual

EMFAC Off-Model Adjustment Factors for Gasoline Light Duty Vehicle to Account for the SAFE Vehicle Rule Not Applied

tblVehicleEF	LHD1	0.06	0.05
tblVehicleEF	LHD1	0.65	0.66
tblVehicleEF	LHD1	0.30	0.44
tblVehicleEF	LHD1	8.4200e-004	6.8100e-004
tblVehicleEF	LHD1	0.08	0.08
tblVehicleEF	LHD1	9.7790e-003	9.4140e-003
tblVehicleEF	LHD1	9.6230e-003	0.01
tblVehicleEF	LHD1	2.4700e-004	2.2700e-004
tblVehicleEF	LHD1	8.0500e-004	6.5100e-004
tblVehicleEF	LHD1	0.03	0.03
tblVehicleEF	LHD1	2.4450e-003	2.3540e-003
tblVehicleEF	LHD1	9.1590e-003	0.01
tblVehicleEF	LHD1	2.2800e-004	2.0900e-004
tblVehicleEF	LHD1	1.9120e-003	0.13
tblVehicleEF	LHD1	0.07	0.03
tblVehicleEF	LHD1	0.02	0.02
tblVehicleEF	LHD1	9.8500e-004	0.00
tblVehicleEF	LHD1	0.09	0.09
tblVehicleEF	LHD1	0.20	0.18
tblVehicleEF	LHD1	0.07	0.11
tblVehicleEF	LHD1	8.6000e-005	8.5000e-005
tblVehicleEF	LHD1	7.6080e-003	7.6450e-003
tblVehicleEF	LHD1	1.1400e-004	1.7600e-004
tblVehicleEF	LHD1	1.9120e-003	0.13
tblVehicleEF	LHD1	0.07	0.03
tblVehicleEF	LHD1	0.03	0.03
tblVehicleEF	LHD1	9.8500e-004	0.00
tblVehicleEF	LHD1	0.11	0.11
tblVehicleEF	LHD1	0.20	0.18

Milpitas Blvd. Bridge - Existing Use Ops Analysis - Santa Clara County, Annual

EMFAC Off-Model Adjustment Factors for Gasoline Light Duty Vehicle to Account for the SAFE Vehicle Rule Not Applied

tblVehicleEF	LHD1	0.08	0.12
tblVehicleEF	LHD2	3.0380e-003	3.1580e-003
tblVehicleEF	LHD2	6.6540e-003	6.9670e-003
tblVehicleEF	LHD2	7.7290e-003	0.01
tblVehicleEF	LHD2	0.14	0.14
tblVehicleEF	LHD2	0.59	0.57
tblVehicleEF	LHD2	0.60	1.22
tblVehicleEF	LHD2	13.88	13.77
tblVehicleEF	LHD2	754.92	827.31
tblVehicleEF	LHD2	7.59	9.92
tblVehicleEF	LHD2	1.7350e-003	1.6800e-003
tblVehicleEF	LHD2	0.07	0.08
tblVehicleEF	LHD2	0.01	0.02
tblVehicleEF	LHD2	0.09	0.09
tblVehicleEF	LHD2	0.77	0.90
tblVehicleEF	LHD2	0.17	0.24
tblVehicleEF	LHD2	1.4370e-003	1.3710e-003
tblVehicleEF	LHD2	0.09	0.09
tblVehicleEF	LHD2	0.01	0.01
tblVehicleEF	LHD2	0.02	0.02
tblVehicleEF	LHD2	1.2700e-004	1.0100e-004
tblVehicleEF	LHD2	1.3750e-003	1.3110e-003
tblVehicleEF	LHD2	0.04	0.03
tblVehicleEF	LHD2	2.6920e-003	2.6640e-003
tblVehicleEF	LHD2	0.01	0.02
tblVehicleEF	LHD2	1.1700e-004	9.3000e-005
tblVehicleEF	LHD2	9.8500e-004	0.07
tblVehicleEF	LHD2	0.04	0.02
tblVehicleEF	LHD2	0.02	0.02

Milpitas Blvd. Bridge - Existing Use Ops Analysis - Santa Clara County, Annual

EMFAC Off-Model Adjustment Factors for Gasoline Light Duty Vehicle to Account for the SAFE Vehicle Rule Not Applied

tblVehicleEF	LHD2	5.1400e-004	0.00
tblVehicleEF	LHD2	0.11	0.12
tblVehicleEF	LHD2	0.09	0.09
tblVehicleEF	LHD2	0.04	0.06
tblVehicleEF	LHD2	1.3300e-004	1.3200e-004
tblVehicleEF	LHD2	7.2890e-003	7.9720e-003
tblVehicleEF	LHD2	7.5000e-005	9.8000e-005
tblVehicleEF	LHD2	9.8500e-004	0.07
tblVehicleEF	LHD2	0.04	0.02
tblVehicleEF	LHD2	0.02	0.02
tblVehicleEF	LHD2	5.1400e-004	0.00
tblVehicleEF	LHD2	0.13	0.13
tblVehicleEF	LHD2	0.09	0.09
tblVehicleEF	LHD2	0.04	0.07
tblVehicleEF	MCY	0.33	0.16
tblVehicleEF	MCY	0.25	0.18
tblVehicleEF	MCY	18.60	12.67
tblVehicleEF	MCY	9.06	8.00
tblVehicleEF	MCY	210.08	187.74
tblVehicleEF	MCY	60.71	48.38
tblVehicleEF	MCY	0.07	0.04
tblVehicleEF	MCY	0.02	8.0200e-003
tblVehicleEF	MCY	1.15	0.57
tblVehicleEF	MCY	0.27	0.14
tblVehicleEF	MCY	0.01	0.01
tblVehicleEF	MCY	1.9970e-003	1.9020e-003
tblVehicleEF	MCY	2.9300e-003	3.4560e-003
tblVehicleEF	MCY	5.0400e-003	4.2000e-003
tblVehicleEF	MCY	1.8650e-003	1.7790e-003

Milpitas Blvd. Bridge - Existing Use Ops Analysis - Santa Clara County, Annual

EMFAC Off-Model Adjustment Factors for Gasoline Light Duty Vehicle to Account for the SAFE Vehicle Rule Not Applied

tblVehicleEF	MCY	2.7520e-003	3.2480e-003
tblVehicleEF	MCY	0.90	3.90
tblVehicleEF	MCY	0.68	3.56
tblVehicleEF	MCY	0.49	0.00
tblVehicleEF	MCY	2.19	1.06
tblVehicleEF	MCY	0.53	3.75
tblVehicleEF	MCY	1.93	1.35
tblVehicleEF	MCY	2.0790e-003	1.8560e-003
tblVehicleEF	MCY	6.0100e-004	4.7800e-004
tblVehicleEF	MCY	0.90	0.09
tblVehicleEF	MCY	0.68	3.56
tblVehicleEF	MCY	0.49	0.00
tblVehicleEF	MCY	2.72	1.28
tblVehicleEF	MCY	0.53	3.75
tblVehicleEF	MCY	2.10	1.46
tblVehicleEF	MDV	3.4000e-003	3.7500e-003
tblVehicleEF	MDV	0.07	0.10
tblVehicleEF	MDV	0.78	0.94
tblVehicleEF	MDV	2.95	3.90
tblVehicleEF	MDV	364.87	411.00
tblVehicleEF	MDV	77.92	104.37
tblVehicleEF	MDV	7.5920e-003	8.3490e-003
tblVehicleEF	MDV	0.03	0.04
tblVehicleEF	MDV	0.07	0.10
tblVehicleEF	MDV	0.29	0.41
tblVehicleEF	MDV	0.04	9.0000e-003
tblVehicleEF	MDV	1.4300e-003	1.3730e-003
tblVehicleEF	MDV	1.8100e-003	2.1610e-003
tblVehicleEF	MDV	0.02	3.1500e-003

Milpitas Blvd. Bridge - Existing Use Ops Analysis - Santa Clara County, Annual

EMFAC Off-Model Adjustment Factors for Gasoline Light Duty Vehicle to Account for the SAFE Vehicle Rule Not Applied

tblVehicleEF	MDV	1.3190e-003	1.2660e-003
tblVehicleEF	MDV	1.6640e-003	1.9870e-003
tblVehicleEF	MDV	0.07	0.35
tblVehicleEF	MDV	0.13	0.09
tblVehicleEF	MDV	0.07	0.00
tblVehicleEF	MDV	0.01	0.02
tblVehicleEF	MDV	0.06	0.27
tblVehicleEF	MDV	0.34	0.49
tblVehicleEF	MDV	3.6060e-003	4.0610e-003
tblVehicleEF	MDV	7.7100e-004	1.0320e-003
tblVehicleEF	MDV	0.07	0.35
tblVehicleEF	MDV	0.13	0.09
tblVehicleEF	MDV	0.07	0.00
tblVehicleEF	MDV	0.02	0.02
tblVehicleEF	MDV	0.06	0.27
tblVehicleEF	MDV	0.38	0.54
tblVehicleEF	MH	9.5570e-003	0.01
tblVehicleEF	MH	0.02	0.03
tblVehicleEF	MH	0.93	1.29
tblVehicleEF	MH	2.03	2.49
tblVehicleEF	MH	1,501.42	1,686.59
tblVehicleEF	MH	18.14	22.55
tblVehicleEF	MH	0.06	0.07
tblVehicleEF	MH	0.03	0.03
tblVehicleEF	MH	1.31	1.54
tblVehicleEF	MH	0.24	0.30
tblVehicleEF	MH	0.13	0.04
tblVehicleEF	MH	0.01	0.01
tblVehicleEF	MH	0.02	0.03

Milpitas Blvd. Bridge - Existing Use Ops Analysis - Santa Clara County, Annual

EMFAC Off-Model Adjustment Factors for Gasoline Light Duty Vehicle to Account for the SAFE Vehicle Rule Not Applied

tblVehicleEF	MH	2.6100e-004	3.1300e-004
tblVehicleEF	MH	0.06	0.02
tblVehicleEF	MH	3.2790e-003	3.3010e-003
tblVehicleEF	MH	0.02	0.03
tblVehicleEF	MH	2.4000e-004	2.8800e-004
tblVehicleEF	MH	0.64	32.73
tblVehicleEF	MH	0.05	8.70
tblVehicleEF	MH	0.23	0.00
tblVehicleEF	MH	0.06	0.08
tblVehicleEF	MH	0.01	0.20
tblVehicleEF	MH	0.09	0.11
tblVehicleEF	MH	0.01	0.02
tblVehicleEF	MH	1.7900e-004	2.2300e-004
tblVehicleEF	MH	0.64	32.73
tblVehicleEF	MH	0.05	8.70
tblVehicleEF	MH	0.23	0.00
tblVehicleEF	MH	0.08	0.11
tblVehicleEF	MH	0.01	0.20
tblVehicleEF	MH	0.10	0.12
tblVehicleEF	MHD	3.5790e-003	0.01
tblVehicleEF	MHD	1.6940e-003	9.6580e-003
tblVehicleEF	MHD	9.1320e-003	8.7730e-003
tblVehicleEF	MHD	0.39	0.67
tblVehicleEF	MHD	0.23	0.35
tblVehicleEF	MHD	1.07	1.07
tblVehicleEF	MHD	72.08	160.26
tblVehicleEF	MHD	1,080.76	1,229.18
tblVehicleEF	MHD	9.15	8.53
tblVehicleEF	MHD	0.01	0.02

Milpitas Blvd. Bridge - Existing Use Ops Analysis - Santa Clara County, Annual

EMFAC Off-Model Adjustment Factors for Gasoline Light Duty Vehicle to Account for the SAFE Vehicle Rule Not Applied

tblVehicleEF	MHD	0.14	0.16
tblVehicleEF	MHD	7.2440e-003	6.0320e-003
tblVehicleEF	MHD	0.41	0.89
tblVehicleEF	MHD	1.45	1.11
tblVehicleEF	MHD	1.70	1.41
tblVehicleEF	MHD	3.6900e-004	2.1280e-003
tblVehicleEF	MHD	0.13	0.05
tblVehicleEF	MHD	7.0230e-003	0.01
tblVehicleEF	MHD	1.1500e-004	1.0700e-004
tblVehicleEF	MHD	3.5300e-004	2.0350e-003
tblVehicleEF	MHD	0.06	0.02
tblVehicleEF	MHD	6.7130e-003	0.01
tblVehicleEF	MHD	1.0600e-004	9.8000e-005
tblVehicleEF	MHD	3.8300e-004	0.03
tblVehicleEF	MHD	0.02	6.2600e-003
tblVehicleEF	MHD	0.02	0.03
tblVehicleEF	MHD	1.9800e-004	0.00
tblVehicleEF	MHD	0.02	0.04
tblVehicleEF	MHD	0.02	0.05
tblVehicleEF	MHD	0.05	0.05
tblVehicleEF	MHD	6.8400e-004	1.4900e-003
tblVehicleEF	MHD	0.01	0.01
tblVehicleEF	MHD	9.1000e-005	8.4000e-005
tblVehicleEF	MHD	3.8300e-004	0.03
tblVehicleEF	MHD	0.02	6.2600e-003
tblVehicleEF	MHD	0.02	0.04
tblVehicleEF	MHD	1.9800e-004	0.00
tblVehicleEF	MHD	0.02	0.05
tblVehicleEF	MHD	0.02	0.05

Milpitas Blvd. Bridge - Existing Use Ops Analysis - Santa Clara County, Annual

EMFAC Off-Model Adjustment Factors for Gasoline Light Duty Vehicle to Account for the SAFE Vehicle Rule Not Applied

tblVehicleEF	MHD	0.05	0.05
tblVehicleEF	OBUS	7.0640e-003	7.4580e-003
tblVehicleEF	OBUS	3.6240e-003	9.2750e-003
tblVehicleEF	OBUS	0.02	0.02
tblVehicleEF	OBUS	0.58	0.51
tblVehicleEF	OBUS	0.43	0.49
tblVehicleEF	OBUS	1.84	1.96
tblVehicleEF	OBUS	92.66	85.71
tblVehicleEF	OBUS	1,326.08	1,388.86
tblVehicleEF	OBUS	15.18	15.49
tblVehicleEF	OBUS	0.01	0.01
tblVehicleEF	OBUS	0.13	0.16
tblVehicleEF	OBUS	0.02	0.02
tblVehicleEF	OBUS	0.38	0.37
tblVehicleEF	OBUS	1.47	1.01
tblVehicleEF	OBUS	1.09	0.98
tblVehicleEF	OBUS	1.2200e-004	4.2300e-004
tblVehicleEF	OBUS	0.13	0.05
tblVehicleEF	OBUS	7.3930e-003	0.02
tblVehicleEF	OBUS	1.4500e-004	1.3400e-004
tblVehicleEF	OBUS	1.1700e-004	4.0500e-004
tblVehicleEF	OBUS	0.06	0.02
tblVehicleEF	OBUS	7.0600e-003	0.02
tblVehicleEF	OBUS	1.3300e-004	1.2400e-004
tblVehicleEF	OBUS	1.0900e-003	0.07
tblVehicleEF	OBUS	0.02	0.02
tblVehicleEF	OBUS	0.05	0.04
tblVehicleEF	OBUS	4.8500e-004	0.00
tblVehicleEF	OBUS	0.02	0.05

Milpitas Blvd. Bridge - Existing Use Ops Analysis - Santa Clara County, Annual

EMFAC Off-Model Adjustment Factors for Gasoline Light Duty Vehicle to Account for the SAFE Vehicle Rule Not Applied

tblVehicleEF	OBUS	0.04	0.08
tblVehicleEF	OBUS	0.09	0.09
tblVehicleEF	OBUS	8.8000e-004	8.1100e-004
tblVehicleEF	OBUS	0.01	0.01
tblVehicleEF	OBUS	1.5000e-004	1.5300e-004
tblVehicleEF	OBUS	1.0900e-003	0.07
tblVehicleEF	OBUS	0.02	0.02
tblVehicleEF	OBUS	0.06	0.05
tblVehicleEF	OBUS	4.8500e-004	0.00
tblVehicleEF	OBUS	0.03	0.06
tblVehicleEF	OBUS	0.04	0.08
tblVehicleEF	OBUS	0.10	0.10
tblVehicleEF	SBUS	0.05	0.07
tblVehicleEF	SBUS	6.0180e-003	0.09
tblVehicleEF	SBUS	4.9720e-003	4.8000e-003
tblVehicleEF	SBUS	2.27	1.65
tblVehicleEF	SBUS	0.49	0.88
tblVehicleEF	SBUS	0.72	0.66
tblVehicleEF	SBUS	346.78	189.38
tblVehicleEF	SBUS	1,049.23	1,027.72
tblVehicleEF	SBUS	4.12	3.73
tblVehicleEF	SBUS	0.05	0.03
tblVehicleEF	SBUS	0.13	0.13
tblVehicleEF	SBUS	4.7550e-003	4.2250e-003
tblVehicleEF	SBUS	3.44	1.39
tblVehicleEF	SBUS	4.65	2.57
tblVehicleEF	SBUS	0.86	0.48
tblVehicleEF	SBUS	3.6120e-003	1.3090e-003
tblVehicleEF	SBUS	0.74	0.04

Milpitas Blvd. Bridge - Existing Use Ops Analysis - Santa Clara County, Annual

EMFAC Off-Model Adjustment Factors for Gasoline Light Duty Vehicle to Account for the SAFE Vehicle Rule Not Applied

tblVehicleEF	SBUS	0.01	0.01
tblVehicleEF	SBUS	0.03	0.01
tblVehicleEF	SBUS	4.8000e-005	4.0000e-005
tblVehicleEF	SBUS	3.4560e-003	1.2520e-003
tblVehicleEF	SBUS	0.32	0.02
tblVehicleEF	SBUS	2.7190e-003	2.6500e-003
tblVehicleEF	SBUS	0.03	0.01
tblVehicleEF	SBUS	4.4000e-005	3.6000e-005
tblVehicleEF	SBUS	5.6700e-004	0.03
tblVehicleEF	SBUS	5.5090e-003	7.3010e-003
tblVehicleEF	SBUS	0.25	0.18
tblVehicleEF	SBUS	2.4700e-004	0.00
tblVehicleEF	SBUS	0.08	0.06
tblVehicleEF	SBUS	0.01	0.02
tblVehicleEF	SBUS	0.03	0.03
tblVehicleEF	SBUS	3.3010e-003	1.7230e-003
tblVehicleEF	SBUS	0.01	9.5530e-003
tblVehicleEF	SBUS	4.1000e-005	3.7000e-005
tblVehicleEF	SBUS	5.6700e-004	0.03
tblVehicleEF	SBUS	5.5090e-003	7.3010e-003
tblVehicleEF	SBUS	0.36	0.30
tblVehicleEF	SBUS	2.4700e-004	0.00
tblVehicleEF	SBUS	0.10	0.16
tblVehicleEF	SBUS	0.01	0.02
tblVehicleEF	SBUS	0.03	0.03
tblVehicleEF	UBUS	1.35	0.35
tblVehicleEF	UBUS	1.5380e-003	3.7340e-003
tblVehicleEF	UBUS	10.12	4.17
tblVehicleEF	UBUS	0.14	0.53

Milpitas Blvd. Bridge - Existing Use Ops Analysis - Santa Clara County, Annual

EMFAC Off-Model Adjustment Factors for Gasoline Light Duty Vehicle to Account for the SAFE Vehicle Rule Not Applied

tblVehicleEF	UBUS	1,597.16	1,098.80
tblVehicleEF	UBUS	1.39	3.20
tblVehicleEF	UBUS	0.26	0.17
tblVehicleEF	UBUS	1.0770e-003	6.2180e-003
tblVehicleEF	UBUS	0.73	0.33
tblVehicleEF	UBUS	0.01	0.04
tblVehicleEF	UBUS	0.07	0.11
tblVehicleEF	UBUS	0.03	0.03
tblVehicleEF	UBUS	5.3280e-003	6.2290e-003
tblVehicleEF	UBUS	1.5000e-005	1.2000e-005
tblVehicleEF	UBUS	0.03	0.04
tblVehicleEF	UBUS	8.3320e-003	8.1710e-003
tblVehicleEF	UBUS	5.0960e-003	5.9560e-003
tblVehicleEF	UBUS	1.4000e-005	1.1000e-005
tblVehicleEF	UBUS	2.1000e-005	9.8940e-003
tblVehicleEF	UBUS	1.6100e-004	3.3030e-003
tblVehicleEF	UBUS	9.0000e-006	0.00
tblVehicleEF	UBUS	0.02	0.06
tblVehicleEF	UBUS	2.9000e-005	7.9870e-003
tblVehicleEF	UBUS	6.4070e-003	0.01
tblVehicleEF	UBUS	0.01	9.4250e-003
tblVehicleEF	UBUS	1.4000e-005	3.2000e-005
tblVehicleEF	UBUS	2.1000e-005	9.8940e-003
tblVehicleEF	UBUS	1.6100e-004	3.3030e-003
tblVehicleEF	UBUS	9.0000e-006	0.00
tblVehicleEF	UBUS	1.38	0.42
tblVehicleEF	UBUS	2.9000e-005	7.9870e-003
tblVehicleEF	UBUS	7.0150e-003	0.01
tblWater	AerobicPercent	87.46	100.00

Milpitas Blvd. Bridge - Existing Use Ops Analysis - Santa Clara County, Annual

EMFAC Off-Model Adjustment Factors for Gasoline Light Duty Vehicle to Account for the SAFE Vehicle Rule Not Applied

tblWater	AerobicPercent	87.46	100.00
tblWater	AnaerobicandFacultativeLagoonsPercent	2.21	0.00
tblWater	AnaerobicandFacultativeLagoonsPercent	2.21	0.00
tblWater	SepticTankPercent	10.33	0.00
tblWater	SepticTankPercent	10.33	0.00

2.0 Emissions Summary

2.1 Overall Construction

Unmitigated Construction

	ROG	NOx	CO	SO2	Fugitive PM10	Exhaust PM10	PM10 Total	Fugitive PM2.5	Exhaust PM2.5	PM2.5 Total	Bio- CO2	NBio- CO2	Total CO2	CH4	N2O	CO2e
Year	tons/yr										MT/yr					
2023	0.0000	0.0000	0.0000	0.0000	0.0000	0.0000	0.0000	0.0000	0.0000	0.0000	0.0000	0.0000	0.0000	0.0000	0.0000	0.0000
2024	0.0000	0.0000	0.0000	0.0000	0.0000	0.0000	0.0000	0.0000	0.0000	0.0000	0.0000	0.0000	0.0000	0.0000	0.0000	0.0000
Maximum	**0.0000**	**0.0000**	**0.0000**	**0.0000**	**0.0000**	**0.0000**	**0.0000**	**0.0000**	**0.0000**	**0.0000**	**0.0000**	**0.0000**	**0.0000**	**0.0000**	**0.0000**	**0.0000**

Mitigated Construction

	ROG	NOx	CO	SO2	Fugitive PM10	Exhaust PM10	PM10 Total	Fugitive PM2.5	Exhaust PM2.5	PM2.5 Total	Bio- CO2	NBio- CO2	Total CO2	CH4	N2O	CO2e
Year	tons/yr										MT/yr					

Milpitas Blvd. Bridge - Existing Use Ops Analysis - Santa Clara County, Annual

EMFAC Off-Model Adjustment Factors for Gasoline Light Duty Vehicle to Account for the SAFE Vehicle Rule Not Applied

2023	0.0000	0.0000	0.0000	0.0000	0.0000	0.0000	0.0000	0.0000	0.0000	0.0000	0.0000	0.0000	0.0000	0.0000	0.0000	0.0000
2024	0.0000	0.0000	0.0000	0.0000	0.0000	0.0000	0.0000	0.0000	0.0000	0.0000	0.0000	0.0000	0.0000	0.0000	0.0000	0.0000
Maximum	**0.0000**	**0.0000**	**0.0000**	**0.0000**	**0.0000**	**0.0000**	**0.0000**	**0.0000**	**0.0000**	**0.0000**	**0.0000**	**0.0000**	**0.0000**	**0.0000**	**0.0000**	**0.0000**

	ROG	NOx	CO	SO2	Fugitive PM10	Exhaust PM10	PM10 Total	Fugitive PM2.5	Exhaust PM2.5	PM2.5 Total	Bio- CO2	NBio-CO2	Total CO2	CH4	N20	CO2e
Percent Reduction	**0.00**	**0.00**	**0.00**	**0.00**	**0.00**	**0.00**	**0.00**	**0.00**	**0.00**	**0.00**	**0.00**	**0.00**	**0.00**	**0.00**	**0.00**	**0.00**

Quarter	Start Date	End Date	Maximum Unmitigated ROG + NOX (tons/quarter)	Maximum Mitigated ROG + NOX (tons/quarter)
		Highest		

2.2 Overall Operational

Unmitigated Operational

	ROG	NOx	CO	SO2	Fugitive PM10	Exhaust PM10	PM10 Total	Fugitive PM2.5	Exhaust PM2.5	PM2.5 Total	Bio- CO2	NBio- CO2	Total CO2	CH4	N2O	CO2e
Category	tons/yr										MT/yr					
Area	0.1951	2.0000e-005	1.6700e-003	0.0000		1.0000e-005	1.0000e-005		1.0000e-005	1.0000e-005	0.0000	3.2500e-003	3.2500e-003	1.0000e-005	0.0000	3.4700e-003
Energy	3.6100e-003	0.0328	0.0276	2.0000e-004		2.4900e-003	2.4900e-003		2.4900e-003	2.4900e-003	0.0000	105.8925	105.8925	0.0120	2.0300e-003	106.7987
Mobile	0.1956	0.1325	1.2622	2.6400e-003	0.2462	1.8600e-003	0.2481	0.0614	1.7400e-003	0.0631	0.0000	243.4156	243.4156	0.0141	0.0114	247.1644
Waste						0.0000	0.0000		0.0000	0.0000	7.7989	0.0000	7.7989	0.4609	0.0000	19.3215
Water						0.0000	0.0000		0.0000	0.0000	2.5977	5.1331	7.7308	9.7700e-003	5.7500e-003	9.6885
Total	**0.3942**	**0.1653**	**1.2914**	**2.8400e-003**	**0.2462**	**4.3600e-003**	**0.2506**	**0.0614**	**4.2400e-003**	**0.0656**	**10.3966**	**354.4444**	**364.8410**	**0.4969**	**0.0192**	**382.9765**

Date: 10/20/2021 5:11 PM

Milpitas Blvd. Bridge - Existing Use Ops Analysis - Santa Clara County, Annual

EMFAC Off-Model Adjustment Factors for Gasoline Light Duty Vehicle to Account for the SAFE Vehicle Rule Not Applied

Mitigated Operational

	ROG	NOx	CO	SO2	Fugitive PM10	Exhaust PM10	PM10 Total	Fugitive PM2.5	Exhaust PM2.5	PM2.5 Total	Bio- CO2	NBio- CO2	Total CO2	CH4	N2O	CO2e
Category	tons/yr										MT/yr					
Area	0.1951	2.0000e-005	1.6700e-003	0.0000		1.0000e-005	1.0000e-005		1.0000e-005	1.0000e-005	0.0000	3.2500e-003	3.2500e-003	1.0000e-005	0.0000	3.4700e-003
Energy	3.6100e-003	0.0328	0.0276	2.0000e-004		2.4900e-003	2.4900e-003		2.4900e-003	2.4900e-003	0.0000	105.8925	105.8925	0.0120	2.0300e-003	106.7987
Mobile	0.1956	0.1325	1.2622	2.6400e-003	0.2462	1.8600e-003	0.2481	0.0614	1.7400e-003	0.0631	0.0000	243.4156	243.4156	0.0141	0.0114	247.1644
Waste						0.0000	0.0000		0.0000	0.0000	7.7989	0.0000	7.7989	0.4609	0.0000	19.3215
Water						0.0000	0.0000		0.0000	0.0000	2.5977	5.1331	7.7308	9.7700e-003	5.7500e-003	9.6885
Total	**0.3942**	**0.1653**	**1.2914**	**2.8400e-003**	**0.2462**	**4.3600e-003**	**0.2506**	**0.0614**	**4.2400e-003**	**0.0656**	**10.3966**	**354.4444**	**364.8410**	**0.4969**	**0.0192**	**382.9765**

	ROG	NOx	CO	SO2	Fugitive PM10	Exhaust PM10	PM10 Total	Fugitive PM2.5	Exhaust PM2.5	PM2.5 Total	Bio- CO2	NBio-CO2	Total CO2	CH4	N20	CO2e
Percent Reduction	**0.00**	**0.00**	**0.00**	**0.00**	**0.00**	**0.00**	**0.00**	**0.00**	**0.00**	**0.00**	**0.00**	**0.00**	**0.00**	**0.00**	**0.00**	**0.00**

4.0 Operational Detail - Mobile

4.1 Mitigation Measures Mobile

Milpitas Blvd. Bridge - Existing Use Ops Analysis - Santa Clara County, Annual

EMFAC Off-Model Adjustment Factors for Gasoline Light Duty Vehicle to Account for the SAFE Vehicle Rule Not Applied

	ROG	NOx	CO	SO2	Fugitive PM10	Exhaust PM10	PM10 Total	Fugitive PM2.5	Exhaust PM2.5	PM2.5 Total	Bio- CO2	NBio- CO2	Total CO2	CH4	N2O	CO2e
Category	tons/yr										MT/yr					
Mitigated	0.1956	0.1325	1.2622	2.6400e-003	0.2462	1.8600e-003	0.2481	0.0614	1.7400e-003	0.0631	0.0000	243.4156	243.4156	0.0141	0.0114	247.1644
Unmitigated	0.1956	0.1325	1.2622	2.6400e-003	0.2462	1.8600e-003	0.2481	0.0614	1.7400e-003	0.0631	0.0000	243.4156	243.4156	0.0141	0.0114	247.1644

4.2 Trip Summary Information

	Average Daily Trip Rate			Unmitigated	Mitigated
Land Use	Weekday	Saturday	Sunday	Annual VMT	Annual VMT
General Office Building	402.33	91.29	28.91	727,801	727,801
Parking Lot	0.00	0.00	0.00		
Total	402.33	91.29	28.91	727,801	727,801

4.3 Trip Type Information

	Miles			Trip %			Trip Purpose %		
Land Use	H-W or C-W	H-S or C-C	H-O or C-NW	H-W or C-W	H-S or C-C	H-O or C-NW	Primary	Diverted	Pass-by
General Office Building	9.50	7.30	7.30	33.00	48.00	19.00	77	19	4
Parking Lot	9.50	7.30	7.30	0.00	0.00	0.00	0	0	0

4.4 Fleet Mix

Land Use	LDA	LDT1	LDT2	MDV	LHD1	LHD2	MHD	HHD	OBUS	UBUS	MCY	SBUS	MH
General Office Building	0.572464	0.055653	0.187060	0.115672	0.020329	0.005102	0.007934	0.006404	0.000900	0.000380	0.024412	0.000914	0.002776
Parking Lot	0.572464	0.055653	0.187060	0.115672	0.020329	0.005102	0.007934	0.006404	0.000900	0.000380	0.024412	0.000914	0.002776

5.0 Energy Detail

Milpitas Blvd. Bridge - Existing Use Ops Analysis - Santa Clara County, Annual

EMFAC Off-Model Adjustment Factors for Gasoline Light Duty Vehicle to Account for the SAFE Vehicle Rule Not Applied

Historical Energy Use: N

5.1 Mitigation Measures Energy

	ROG	NOx	CO	SO2	Fugitive PM10	Exhaust PM10	PM10 Total	Fugitive PM2.5	Exhaust PM2.5	PM2.5 Total	Bio- CO2	NBio- CO2	Total CO2	CH4	N2O	CO2e
Category	tons/yr										MT/yr					
Electricity Mitigated						0.0000	0.0000		0.0000	0.0000	0.0000	70.1829	70.1829	0.0114	1.3800e-003	70.8768
Electricity Unmitigated						0.0000	0.0000		0.0000	0.0000	0.0000	70.1829	70.1829	0.0114	1.3800e-003	70.8768
NaturalGas Mitigated	3.6100e-003	0.0328	0.0276	2.0000e-004		2.4900e-003	2.4900e-003		2.4900e-003	2.4900e-003	0.0000	35.7096	35.7096	6.8000e-004	6.5000e-004	35.9219
NaturalGas Unmitigated	3.6100e-003	0.0328	0.0276	2.0000e-004		2.4900e-003	2.4900e-003		2.4900e-003	2.4900e-003	0.0000	35.7096	35.7096	6.8000e-004	6.5000e-004	35.9219

5.2 Energy by Land Use - NaturalGas

Unmitigated

	NaturalGas Use	ROG	NOx	CO	SO2	Fugitive PM10	Exhaust PM10	PM10 Total	Fugitive PM2.5	Exhaust PM2.5	PM2.5 Total	Bio- CO2	NBio- CO2	Total CO2	CH4	N2O	CO2e
Land Use	kBTU/yr	tons/yr										MT/yr					
General Office Building	669173	3.6100e-003	0.0328	0.0276	2.0000e-004		2.4900e-003	2.4900e-003		2.4900e-003	2.4900e-003	0.0000	35.7096	35.7096	6.8000e-004	6.5000e-004	35.9219
Parking Lot	0	0.0000	0.0000	0.0000	0.0000		0.0000	0.0000		0.0000	0.0000	0.0000	0.0000	0.0000	0.0000	0.0000	0.0000

Milpitas Blvd. Bridge - Existing Use Ops Analysis - Santa Clara County, Annual

EMFAC Off-Model Adjustment Factors for Gasoline Light Duty Vehicle to Account for the SAFE Vehicle Rule Not Applied

Total		**3.6100e-003**	**0.0328**	**0.0276**	**2.0000e-004**		**2.4900e-003**	**2.4900e-003**		**2.4900e-003**	**2.4900e-003**	**0.0000**	**35.7096**	**35.7096**	**6.8000e-004**	**6.5000e-004**	**35.9219**

Mitigated

	NaturalGas Use	ROG	NOx	CO	SO2	Fugitive PM10	Exhaust PM10	PM10 Total	Fugitive PM2.5	Exhaust PM2.5	PM2.5 Total	Bio- CO2	NBio- CO2	Total CO2	CH4	N2O	CO2e
Land Use	kBTU/yr	tons/yr										MT/yr					
General Office Building	669173	3.6100e-003	0.0328	0.0276	2.0000e-004		2.4900e-003	2.4900e-003		2.4900e-003	2.4900e-003	0.0000	35.7096	35.7096	6.8000e-004	6.5000e-004	35.9219
Parking Lot	0	0.0000	0.0000	0.0000	0.0000		0.0000	0.0000		0.0000	0.0000	0.0000	0.0000	0.0000	0.0000	0.0000	0.0000
Total		**3.6100e-003**	**0.0328**	**0.0276**	**2.0000e-004**		**2.4900e-003**	**2.4900e-003**		**2.4900e-003**	**2.4900e-003**	**0.0000**	**35.7096**	**35.7096**	**6.8000e-004**	**6.5000e-004**	**35.9219**

5.3 Energy by Land Use - Electricity

Unmitigated

	Electricity Use	Total CO2	CH4	N2O	CO2e
Land Use	kWh/yr	MT/yr			
General Office Building	709241	65.6217	0.0106	1.2900e-003	66.2706
Parking Lot	49297.5	4.5612	7.4000e-004	9.0000e-005	4.6063
Total		**70.1829**	**0.0114**	**1.3800e-003**	**70.8768**

Milpitas Blvd. Bridge - Existing Use Ops Analysis - Santa Clara County, Annual

EMFAC Off-Model Adjustment Factors for Gasoline Light Duty Vehicle to Account for the SAFE Vehicle Rule Not Applied

Mitigated

	Electricity Use	Total CO2	CH4	N2O	CO2e
Land Use	kWh/yr	MT/yr			
General Office Building	709241	65.6217	0.0106	1.2900e-003	66.2706
Parking Lot	49297.5	4.5612	7.4000e-004	9.0000e-005	4.6063
Total		**70.1829**	**0.0114**	**1.3800e-003**	**70.8768**

6.0 Area Detail

6.1 Mitigation Measures Area

	ROG	NOx	CO	SO2	Fugitive PM10	Exhaust PM10	PM10 Total	Fugitive PM2.5	Exhaust PM2.5	PM2.5 Total	Bio- CO2	NBio- CO2	Total CO2	CH4	N2O	CO2e
Category	tons/yr										MT/yr					
Mitigated	0.1951	2.0000e-005	1.6700e-003	0.0000		1.0000e-005	1.0000e-005		1.0000e-005	1.0000e-005	0.0000	3.2500e-003	3.2500e-003	1.0000e-005	0.0000	3.4700e-003
Unmitigated	0.1951	2.0000e-005	1.6700e-003	0.0000		1.0000e-005	1.0000e-005		1.0000e-005	1.0000e-005	0.0000	3.2500e-003	3.2500e-003	1.0000e-005	0.0000	3.4700e-003

Milpitas Blvd. Bridge - Existing Use Ops Analysis - Santa Clara County, Annual

EMFAC Off-Model Adjustment Factors for Gasoline Light Duty Vehicle to Account for the SAFE Vehicle Rule Not Applied

6.2 Area by SubCategory

Unmitigated

	ROG	NOx	CO	SO2	Fugitive PM10	Exhaust PM10	PM10 Total	Fugitive PM2.5	Exhaust PM2.5	PM2.5 Total	Bio- CO2	NBio- CO2	Total CO2	CH4	N2O	CO2e
SubCategory	tons/yr										MT/yr					
Architectural Coating	0.0245					0.0000	0.0000		0.0000	0.0000	0.0000	0.0000	0.0000	0.0000	0.0000	0.0000
Consumer Products	0.1704					0.0000	0.0000		0.0000	0.0000	0.0000	0.0000	0.0000	0.0000	0.0000	0.0000
Landscaping	1.5000e-004	2.0000e-005	1.6700e-003	0.0000		1.0000e-005	1.0000e-005		1.0000e-005	1.0000e-005	0.0000	3.2500e-003	3.2500e-003	1.0000e-005	0.0000	3.4700e-003
Total	**0.1951**	**2.0000e-005**	**1.6700e-003**	**0.0000**		**1.0000e-005**	**1.0000e-005**		**1.0000e-005**	**1.0000e-005**	**0.0000**	**3.2500e-003**	**3.2500e-003**	**1.0000e-005**	**0.0000**	**3.4700e-003**

Mitigated

	ROG	NOx	CO	SO2	Fugitive PM10	Exhaust PM10	PM10 Total	Fugitive PM2.5	Exhaust PM2.5	PM2.5 Total	Bio- CO2	NBio- CO2	Total CO2	CH4	N2O	CO2e
SubCategory	tons/yr										MT/yr					
Architectural Coating	0.0245					0.0000	0.0000		0.0000	0.0000	0.0000	0.0000	0.0000	0.0000	0.0000	0.0000
Consumer Products	0.1704					0.0000	0.0000		0.0000	0.0000	0.0000	0.0000	0.0000	0.0000	0.0000	0.0000
Landscaping	1.5000e-004	2.0000e-005	1.6700e-003	0.0000		1.0000e-005	1.0000e-005		1.0000e-005	1.0000e-005	0.0000	3.2500e-003	3.2500e-003	1.0000e-005	0.0000	3.4700e-003

EMFAC Off-Model Adjustment Factors for Gasoline Light Duty Vehicle to Account for the SAFE Vehicle Rule Not Applied

Total	**0.1951**	**2.0000e-005**	**1.6700e-003**	**0.0000**		**1.0000e-005**	**1.0000e-005**		**1.0000e-005**	**1.0000e-005**	**0.0000**	**3.2500e-003**	**3.2500e-003**	**1.0000e-005**	**0.0000**	**3.4700e-003**

7.0 Water Detail

7.1 Mitigation Measures Water

	Total CO2	CH4	N2O	CO2e
Category	MT/yr			
Mitigated	7.7308	9.7700e-003	5.7500e-003	9.6885
Unmitigated	7.7308	9.7700e-003	5.7500e-003	9.6885

7.2 Water by Land Use

Unmitigated

	Indoor/Outdoor Use	Total CO2	CH4	N2O	CO2e
Land Use	Mgal	MT/yr			
General Office Building	7.34218 / 4.50005	7.7308	9.7700e-003	5.7500e-003	9.6885
Parking Lot	0 / 0	0.0000	0.0000	0.0000	0.0000

Milpitas Blvd. Bridge - Existing Use Ops Analysis - Santa Clara County, Annual

EMFAC Off-Model Adjustment Factors for Gasoline Light Duty Vehicle to Account for the SAFE Vehicle Rule Not Applied

Total	**7.7308**	**9.7700e-003**	**5.7500e-003**	**9.6885**

Mitigated

	Indoor/Outdoor Use	Total CO2	CH4	N2O	CO2e
Land Use	Mgal	MT/yr			
General Office Building	7.34218 / 4.50005	7.7308	9.7700e-003	5.7500e-003	9.6885
Parking Lot	0 / 0	0.0000	0.0000	0.0000	0.0000
Total		**7.7308**	**9.7700e-003**	**5.7500e-003**	**9.6885**

8.0 Waste Detail

8.1 Mitigation Measures Waste

Category/Year

	Total CO2	CH4	N2O	CO2e
	MT/yr			
Mitigated	7.7989	0.4609	0.0000	19.3215

Unmitigated	7.7989	0.4609	0.0000	19.3215

8.2 Waste by Land Use

Unmitigated

	Waste Disposed	Total CO2	CH4	N2O	CO2e
Land Use	tons	MT/yr			
General Office Building	38.42	7.7989	0.4609	0.0000	19.3215
Parking Lot	0	0.0000	0.0000	0.0000	0.0000
Total		**7.7989**	**0.4609**	**0.0000**	**19.3215**

Mitigated

	Waste Disposed	Total CO2	CH4	N2O	CO2e
Land Use	tons	MT/yr			
General Office Building	38.42	7.7989	0.4609	0.0000	19.3215
Parking Lot	0	0.0000	0.0000	0.0000	0.0000
Total		**7.7989**	**0.4609**	**0.0000**	**19.3215**

Milpitas Blvd. Bridge - Existing Use Ops Analysis - Santa Clara County, Annual

EMFAC Off-Model Adjustment Factors for Gasoline Light Duty Vehicle to Account for the SAFE Vehicle Rule Not Applied

9.0 Operational Offroad

Equipment Type	Number	Hours/Day	Days/Year	Horse Power	Load Factor	Fuel Type

10.0 Stationary Equipment

Fire Pumps and Emergency Generators

Equipment Type	Number	Hours/Day	Hours/Year	Horse Power	Load Factor	Fuel Type

Boilers

Equipment Type	Number	Heat Input/Day	Heat Input/Year	Boiler Rating	Fuel Type

User Defined Equipment

Equipment Type	Number

11.0 Vegetation

CalEEMod EMFAC2021 Fleet Mix Input - 2024

FleetMixLandUseSubType	LDA	LDT1	LDT2	MDV	LHD1	LHD2	MHD	HHD	OBUS	UBUS	MCY
	0.53116	0.041583	0.227794	0.127091	0.023141	0.005641	0.009358	0.007307	0.001055	0.000417	0.022105

SBUS	MH
0.000682	0.002666

CalEEMod EMFAC2021 Emission Factors Input -2024

Season	EmissionType	LDA	LDT1	LDT2	MDV	LHD1	LHD2	MHD	HHD	OBUS	UBUS	MCY	SBUS	MH
A	CH4_IDLEX	0	0	0	0	0.005377	0.003249	0.013383	0.232934116	0.007458	0	0	0.074531	0
A	CH4_RUNEX	0.002051	0.006222	0.002817	0.003749	0.00818	0.006974	0.009658	0.121678903	0.009275	0.353984559	0.171772	0.091035	0.012488
A	CH4_STREX	0.067726	0.104963	0.08275	0.099602	0.022625	0.012599	0.008773	8.02769E-08	0.017671	0.00393016	0.189534	0.0048	0.026745
A	CO_IDLEX	0	0	0	0	0.196553	0.142433	0.671381	5.195559849	0.514566	0	0	1.654918	0
A	CO_RUNEX	0.649711	1.418726	0.829327	0.943281	0.89701	0.569575	0.346173	0.774886828	0.491534	4.169641806	14.38328	0.884386	1.294901
A	CO_STREX	3.008478	5.230353	3.655626	3.931792	2.13326	1.201025	1.07433	0.000626211	1.960551	0.525737998	7.689677	0.664389	2.491606
A	CO2_NBIO_IDLEX	0	0	0	0	8.727528	13.78864	160.3244	832.6005736	85.71146	0	0	189.4507	0
A	CO2_NBIO_RUNEX	246.8081	327.0753	340.7339	411.0049	784.1623	828.9778	1229.838	1617.576982	1389.139	1098.805139	190.6913	1028.119	1686.59
A	CO2_NBIO_STREX	64.09427	86.29597	87.2747	104.4236	17.80424	9.907975	8.533177	0.019577946	15.49631	3.197080643	51.77839	3.727325	22.54937
A	NOX_IDLEX	0	0	0	0	0.048387	0.093022	0.894313	4.111213715	0.365684	0	0	1.389668	0
A	NOX_RUNEX	0.037369	0.127832	0.068032	0.098516	0.661225	0.88969	1.112922	1.850604526	1.007061	0.327856595	0.598844	2.57268	1.5351
A	NOX_STREX	0.240038	0.379704	0.332074	0.41728	0.438657	0.24651	1.407896	2.731408381	0.979918	0.042218612	0.148555	0.480958	0.299202
A	PM10_IDLEX	0	0	0	0	0.000681	0.001371	0.002128	0.002182492	0.000423	0	0	0.001309	0
A	PM10_PMBW	0.007168	0.009226	0.008866	0.009	0.077823	0.090794	0.045399	0.08129752	0.049798	0.11066361	0.012	0.044858	0.044947
A	PM10_PMTW	0.008	0.008	0.008	0.008	0.009414	0.010658	0.012	0.035125425	0.012	0.032683644	0.004	0.0106	0.013206
A	PM10_RUNEX	0.001171	0.001927	0.001333	0.001373	0.014027	0.022761	0.012985	0.025474433	0.015841	0.006229362	0.001954	0.013303	0.03019
A	PM10_STREX	0.001911	0.002898	0.002107	0.002161	0.000227	0.000101	0.000107	6.09682E-07	0.000134	1.21066E-05	0.00338	3.95E-05	0.000313
A	PM25_IDLEX	0	0	0	0	0.000651	0.001311	0.002035	0.002082052	0.000405	0	0	0.001252	0
A	PM25_PMBW	0.002509	0.003229	0.003103	0.00315	0.027238	0.031778	0.01589	0.028454132	0.017429	0.038732263	0.0042	0.0157	0.015732
A	PM25_PMTW	0.002	0.002	0.002	0.002	0.002354	0.002664	0.003	0.008781356	0.003	0.008170911	0.001	0.00265	0.003301
A	PM25_RUNEX	0.001078	0.001774	0.001226	0.001266	0.01338	0.021758	0.012415	0.0243688	0.015147	0.005956092	0.001827	0.012712	0.028836
A	PM25_STREX	0.001757	0.002664	0.001938	0.001987	0.000209	9.28E-05	9.82E-05	5.6058E-07	0.000124	1.11315E-05	0.003177	3.63E-05	0.000288
A	ROG_DIURN	0.272416	0.595124	0.287823	0.349834	0.128573	0.066802	0.025795	0.000195977	0.069031	0.00989389	3.900294	0.027017	32.73442
A	ROG_HTSK	0.080672	0.164385	0.080502	0.093899	0.032798	0.017191	0.00626	5.82846E-05	0.0166	0.00330336	3.559276	0.007301	8.700008
A	ROG_IDLEX	0	0	0	0	0.021942	0.016299	0.026359	0.329789936	0.040067	0	0	0.181581	0
A	ROG_RESTL	0	0	0	0	0	0	0	0	0	0	0	0	0
A	ROG_RUNEX	0.007886	0.027617	0.0111	0.015872	0.087665	0.11544	0.038113	0.018605536	0.047576	0.063031406	1.123169	0.055863	0.083758
A	ROG_RUNLS	0.203855	0.469715	0.214096	0.266358	0.182065	0.092651	0.050964	0.000525006	0.075921	0.007986926	3.75283	0.017605	0.204308
A	ROG_STREX	0.311462	0.537261	0.383703	0.4977	0.112219	0.061861	0.048943	4.36152E-07	0.093584	0.014025351	1.402019	0.027327	0.113367
A	SO2_IDLEX	0	0	0	0	8.5E-05	0.000132	0.001491	0.007282701	0.000811	0	0	0.001724	0
A	SO2_RUNEX	0.00244	0.003233	0.003368	0.004061	0.00766	0.007988	0.011671	0.014639651	0.013278	0.009424764	0.001885	0.009556	0.01654
A	SO2_STREX	0.000634	0.000853	0.000863	0.001032	0.000176	9.8E-05	8.44E-05	1.93548E-07	0.000153	3.16064E-05	0.000512	3.68E-05	0.000223
A	TOG_DIURN	0.272416	0.595124	0.287823	0.349834	0.128573	0.066802	0.025795	0.000195977	0.069031	0.00989389	0.086215	0.027017	32.73442
A	TOG_HTSK	0.080672	0.164385	0.080502	0.093899	0.032798	0.017191	0.00626	5.82846E-05	0.0166	0.00330336	3.559276	0.007301	8.700008
A	TOG_IDLEX	0	0	0	0	0.031162	0.022074	0.043266	0.594148623	0.053137	0	0	0.296054	0
A	TOG_RESTL	0	0	0	0	0	0	0	0	0	0	0	0	0
A	TOG_RUNEX	0.011489	0.040276	0.016182	0.023096	0.108371	0.134469	0.053054	0.142671417	0.063874	0.424562425	1.354171	0.155502	0.11065
A	TOG_RUNLS	0.203855	0.469715	0.214096	0.266358	0.182065	0.092651	0.050964	0.000525006	0.075921	0.007986926	3.75283	0.017605	0.204308
A	TOG_STREX	0.341012	0.588232	0.420106	0.544917	0.122865	0.06773	0.053586	4.77531E-07	0.102462	0.015355994	1.524416	0.029919	0.124122
A	N2O_IDLEX	0	0	0	0	0.000642	0.001685	0.024699	0.134118084	0.012191	0	0	0.025119	0
A	N2O_RUNEX	0.004156	0.009374	0.006017	0.008347	0.041472	0.08253	0.158314	0.25814886	0.157784	0.166447984	0.040955	0.128311	0.069357
A	N2O_STREX	0.030787	0.038539	0.037034	0.039993	0.035165	0.019738	0.006032	1.94763E-05	0.015206	0.00682938	0.008948	0.004225	0.031398

Milpitas Blvd. Bridge - Existing Use Ops Analysis - Santa Clara County, Annual

EMFAC Off-Model Adjustment Factors for Gasoline Light Duty Vehicle to Account for the SAFE Vehicle Rule Not Applied

Milpitas Blvd. Bridge - Existing Use Ops Analysis

Santa Clara County, Annual

1.0 Project Characteristics

1.1 Land Usage

Land Uses	Size	Metric	Lot Acreage	Floor Surface Area	Population
General Office Building	41.31	1000sqft	0.95	41,307.00	0
Parking Lot	140.85	1000sqft	3.23	140,850.00	0

1.2 Other Project Characteristics

Urbanization	Urban	**Wind Speed (m/s)**	2.2	**Precipitation Freq (Days)**	58
Climate Zone	4			**Operational Year**	2030
Utility Company	Pacific Gas and Electric Company				
CO2 Intensity (lb/MWhr)	203.98	**CH4 Intensity (lb/MWhr)**	0.033	**N2O Intensity (lb/MWhr)**	0.004

1.3 User Entered Comments & Non-Default Data

Project Characteristics - Analysis of Existing Ops Emissions

Land Use - Emissions Analysis for Existing Ops

Construction Phase - Ops analysis, No construction

Off-road Equipment - Ops Analysis

Off-road Equipment - Ops Analysis

Off-road Equipment - Ops Analysis

Off-road Equipment - Ops Analysis

Off-road Equipment - Ops Analysis

Off-road Equipment - Ops Analysis

Trips and VMT - Ops Analysis

Grading -

Date: 11/8/2021 4:30 PM

Milpitas Blvd. Bridge - Existing Use Ops Analysis - Santa Clara County, Annual

EMFAC Off-Model Adjustment Factors for Gasoline Light Duty Vehicle to Account for the SAFE Vehicle Rule Not Applied

Vehicle Emission Factors - EMFAC2021 EFs

Vehicle Emission Factors -

Vehicle Emission Factors -

Water And Wastewater - 100% WWTP, city sewer

Construction Off-road Equipment Mitigation - No Construction

Fleet Mix - Fleet Mix based on county vehilcle Pop in EMFAC2021

Table Name	Column Name	Default Value	New Value
tblConstructionPhase	NumDays	20.00	0.00
tblConstructionPhase	NumDays	5.00	0.00
tblConstructionPhase	NumDays	8.00	0.00
tblConstructionPhase	NumDays	230.00	0.00
tblConstructionPhase	NumDays	18.00	0.00
tblConstructionPhase	NumDays	18.00	0.00
tblFleetMix	HHD	6.1320e-003	7.8440e-003
tblFleetMix	HHD	6.1320e-003	7.8440e-003
tblFleetMix	LDA	0.58	0.51
tblFleetMix	LDA	0.58	0.51
tblFleetMix	LDT1	0.06	0.04
tblFleetMix	LDT1	0.06	0.04
tblFleetMix	LDT2	0.18	0.24
tblFleetMix	LDT2	0.18	0.24
tblFleetMix	LHD1	0.02	0.02
tblFleetMix	LHD1	0.02	0.02
tblFleetMix	LHD2	5.3980e-003	6.1702e-003
tblFleetMix	LHD2	5.3980e-003	6.1702e-003
tblFleetMix	MCY	0.02	0.02
tblFleetMix	MCY	0.02	0.02
tblFleetMix	MDV	0.12	0.14

Milpitas Blvd. Bridge - Existing Use Ops Analysis - Santa Clara County, Annual

EMFAC Off-Model Adjustment Factors for Gasoline Light Duty Vehicle to Account for the SAFE Vehicle Rule Not Applied

tblFleetMix	MDV	0.12	0.14
tblFleetMix	MH	2.5260e-003	2.2720e-003
tblFleetMix	MH	2.5260e-003	2.2720e-003
tblFleetMix	MHD	8.2190e-003	9.6587e-003
tblFleetMix	MHD	8.2190e-003	9.6587e-003
tblFleetMix	OBUS	8.5200e-004	1.0637e-003
tblFleetMix	OBUS	8.5200e-004	1.0637e-003
tblFleetMix	SBUS	8.3700e-004	6.8094e-004
tblFleetMix	SBUS	8.3700e-004	6.8094e-004
tblFleetMix	UBUS	3.3500e-004	3.9649e-004
tblFleetMix	UBUS	3.3500e-004	3.9649e-004
tblLandUse	LandUseSquareFeet	41,310.00	41,307.00
tblOffRoadEquipment	OffRoadEquipmentUnitAmount	1.00	0.00
tblOffRoadEquipment	OffRoadEquipmentUnitAmount	3.00	0.00
tblOffRoadEquipment	OffRoadEquipmentUnitAmount	2.00	0.00
tblOffRoadEquipment	OffRoadEquipmentUnitAmount	3.00	0.00
tblOffRoadEquipment	OffRoadEquipmentUnitAmount	4.00	0.00
tblOffRoadEquipment	OffRoadEquipmentUnitAmount	1.00	0.00
tblOffRoadEquipment	OffRoadEquipmentUnitAmount	1.00	0.00
tblOffRoadEquipment	OffRoadEquipmentUnitAmount	1.00	0.00
tblOffRoadEquipment	OffRoadEquipmentUnitAmount	3.00	0.00
tblOffRoadEquipment	OffRoadEquipmentUnitAmount	1.00	0.00
tblOffRoadEquipment	OffRoadEquipmentUnitAmount	3.00	0.00
tblOffRoadEquipment	OffRoadEquipmentUnitAmount	1.00	0.00
tblOffRoadEquipment	OffRoadEquipmentUnitAmount	3.00	0.00
tblOffRoadEquipment	OffRoadEquipmentUnitAmount	1.00	0.00
tblOffRoadEquipment	OffRoadEquipmentUnitAmount	2.00	0.00
tblOffRoadEquipment	OffRoadEquipmentUnitAmount	1.00	0.00
tblOffRoadEquipment	OffRoadEquipmentUnitAmount	2.00	0.00

Milpitas Blvd. Bridge - Existing Use Ops Analysis - Santa Clara County, Annual

EMFAC Off-Model Adjustment Factors for Gasoline Light Duty Vehicle to Account for the SAFE Vehicle Rule Not Applied

tblOffRoadEquipment	OffRoadEquipmentUnitAmount	2.00	0.00
tblOffRoadEquipment	OffRoadEquipmentUnitAmount	1.00	0.00
tblOffRoadEquipment	OffRoadEquipmentUnitAmount	1.00	0.00
tblOffRoadEquipment	UsageHours	6.00	0.00
tblOffRoadEquipment	UsageHours	6.00	0.00
tblOffRoadEquipment	UsageHours	8.00	0.00
tblOffRoadEquipment	UsageHours	7.00	0.00
tblOffRoadEquipment	UsageHours	8.00	0.00
tblOffRoadEquipment	UsageHours	8.00	0.00
tblOffRoadEquipment	UsageHours	8.00	0.00
tblOffRoadEquipment	UsageHours	8.00	0.00
tblOffRoadEquipment	UsageHours	8.00	0.00
tblOffRoadEquipment	UsageHours	8.00	0.00
tblOffRoadEquipment	UsageHours	6.00	0.00
tblOffRoadEquipment	UsageHours	6.00	0.00
tblOffRoadEquipment	UsageHours	8.00	0.00
tblOffRoadEquipment	UsageHours	8.00	0.00
tblOffRoadEquipment	UsageHours	8.00	0.00
tblOffRoadEquipment	UsageHours	7.00	0.00
tblOffRoadEquipment	UsageHours	8.00	0.00
tblOffRoadEquipment	UsageHours	8.00	0.00
tblOffRoadEquipment	UsageHours	8.00	0.00
tblOffRoadEquipment	UsageHours	8.00	0.00
tblTripsAndVMT	VendorTripNumber	30.00	0.00
tblTripsAndVMT	WorkerTripNumber	72.00	0.00
tblTripsAndVMT	WorkerTripNumber	14.00	0.00
tblVehicleEF	HHD	0.02	0.20
tblVehicleEF	HHD	0.05	0.09
tblVehicleEF	HHD	0.00	4.4000e-008

Milpitas Blvd. Bridge - Existing Use Ops Analysis - Santa Clara County, Annual

EMFAC Off-Model Adjustment Factors for Gasoline Light Duty Vehicle to Account for the SAFE Vehicle Rule Not Applied

tblVehicleEF	HHD	6.28	5.00
tblVehicleEF	HHD	0.41	0.63
tblVehicleEF	HHD	6.6850e-003	8.7263e-004
tblVehicleEF	HHD	930.05	719.71
tblVehicleEF	HHD	1,226.35	1,395.93
tblVehicleEF	HHD	0.05	9.4375e-003
tblVehicleEF	HHD	0.15	0.12
tblVehicleEF	HHD	0.19	0.22
tblVehicleEF	HHD	2.0000e-006	3.7700e-006
tblVehicleEF	HHD	5.20	3.81
tblVehicleEF	HHD	2.52	1.45
tblVehicleEF	HHD	2.31	2.60
tblVehicleEF	HHD	2.1460e-003	1.7376e-003
tblVehicleEF	HHD	0.06	0.08
tblVehicleEF	HHD	0.04	0.04
tblVehicleEF	HHD	0.02	0.02
tblVehicleEF	HHD	1.0000e-006	1.4400e-007
tblVehicleEF	HHD	2.0530e-003	1.6556e-003
tblVehicleEF	HHD	0.03	0.03
tblVehicleEF	HHD	8.9050e-003	8.7863e-003
tblVehicleEF	HHD	0.02	0.02
tblVehicleEF	HHD	1.0000e-006	1.3200e-007
tblVehicleEF	HHD	1.0000e-006	4.0200e-005
tblVehicleEF	HHD	5.8000e-005	1.2700e-005
tblVehicleEF	HHD	0.42	0.31
tblVehicleEF	HHD	1.0000e-006	0.00
tblVehicleEF	HHD	0.02	0.01
tblVehicleEF	HHD	2.5000e-005	1.1399e-004
tblVehicleEF	HHD	2.0000e-006	2.3900e-007

Milpitas Blvd. Bridge - Existing Use Ops Analysis - Santa Clara County, Annual

EMFAC Off-Model Adjustment Factors for Gasoline Light Duty Vehicle to Account for the SAFE Vehicle Rule Not Applied

tblVehicleEF	HHD	8.6530e-003	6.2147e-003
tblVehicleEF	HHD	0.01	0.01
tblVehicleEF	HHD	1.0000e-006	9.3300e-008
tblVehicleEF	HHD	1.0000e-006	4.0200e-005
tblVehicleEF	HHD	5.8000e-005	1.2700e-005
tblVehicleEF	HHD	0.49	0.54
tblVehicleEF	HHD	1.0000e-006	0.00
tblVehicleEF	HHD	0.07	0.10
tblVehicleEF	HHD	2.5000e-005	1.1399e-004
tblVehicleEF	HHD	2.0000e-006	2.6100e-007
tblVehicleEF	LDA	9.5900e-004	1.2508e-003
tblVehicleEF	LDA	0.03	0.05
tblVehicleEF	LDA	0.40	0.48
tblVehicleEF	LDA	1.69	2.09
tblVehicleEF	LDA	199.86	218.64
tblVehicleEF	LDA	42.17	55.99
tblVehicleEF	LDA	3.1760e-003	3.1649e-003
tblVehicleEF	LDA	0.02	0.03
tblVehicleEF	LDA	0.02	0.02
tblVehicleEF	LDA	0.12	0.18
tblVehicleEF	LDA	0.04	7.0779e-003
tblVehicleEF	LDA	8.0000e-003	8.0000e-003
tblVehicleEF	LDA	9.1600e-004	8.3824e-004
tblVehicleEF	LDA	1.2750e-003	1.4817e-003
tblVehicleEF	LDA	0.02	2.4773e-003
tblVehicleEF	LDA	2.0000e-003	2.0000e-003
tblVehicleEF	LDA	8.4300e-004	7.7101e-004
tblVehicleEF	LDA	1.1720e-003	1.3623e-003
tblVehicleEF	LDA	0.02	0.23

Milpitas Blvd. Bridge - Existing Use Ops Analysis - Santa Clara County, Annual

EMFAC Off-Model Adjustment Factors for Gasoline Light Duty Vehicle to Account for the SAFE Vehicle Rule Not Applied

tblVehicleEF	LDA	0.06	0.06
tblVehicleEF	LDA	0.02	0.00
tblVehicleEF	LDA	3.2350e-003	4.3404e-003
tblVehicleEF	LDA	0.02	0.17
tblVehicleEF	LDA	0.12	0.20
tblVehicleEF	LDA	1.9770e-003	2.1614e-003
tblVehicleEF	LDA	4.1700e-004	5.5354e-004
tblVehicleEF	LDA	0.02	0.23
tblVehicleEF	LDA	0.06	0.06
tblVehicleEF	LDA	0.02	0.00
tblVehicleEF	LDA	4.6990e-003	6.3287e-003
tblVehicleEF	LDA	0.02	0.17
tblVehicleEF	LDA	0.13	0.22
tblVehicleEF	LDT1	1.6710e-003	3.2732e-003
tblVehicleEF	LDT1	0.04	0.07
tblVehicleEF	LDT1	0.53	0.90
tblVehicleEF	LDT1	1.82	3.41
tblVehicleEF	LDT1	241.46	296.02
tblVehicleEF	LDT1	51.55	76.24
tblVehicleEF	LDT1	3.7700e-003	5.8697e-003
tblVehicleEF	LDT1	0.02	0.03
tblVehicleEF	LDT1	0.03	0.07
tblVehicleEF	LDT1	0.15	0.27
tblVehicleEF	LDT1	0.04	9.1380e-003
tblVehicleEF	LDT1	8.0000e-003	8.0000e-003
tblVehicleEF	LDT1	1.0550e-003	1.2601e-003
tblVehicleEF	LDT1	1.4610e-003	2.0739e-003
tblVehicleEF	LDT1	0.02	3.1983e-003
tblVehicleEF	LDT1	2.0000e-003	2.0000e-003

EMFAC Off-Model Adjustment Factors for Gasoline Light Duty Vehicle to Account for the SAFE Vehicle Rule Not Applied

tblVehicleEF	LDT1	9.7000e-004	1.1586e-003
tblVehicleEF	LDT1	1.3440e-003	1.9069e-003
tblVehicleEF	LDT1	0.05	0.47
tblVehicleEF	LDT1	0.09	0.12
tblVehicleEF	LDT1	0.04	0.00
tblVehicleEF	LDT1	6.4760e-003	0.01
tblVehicleEF	LDT1	0.06	0.36
tblVehicleEF	LDT1	0.15	0.34
tblVehicleEF	LDT1	2.3890e-003	2.9265e-003
tblVehicleEF	LDT1	5.1000e-004	7.5371e-004
tblVehicleEF	LDT1	0.05	0.47
tblVehicleEF	LDT1	0.09	0.12
tblVehicleEF	LDT1	0.04	0.00
tblVehicleEF	LDT1	9.4480e-003	0.02
tblVehicleEF	LDT1	0.06	0.36
tblVehicleEF	LDT1	0.17	0.37
tblVehicleEF	LDT2	1.7260e-003	1.8780e-003
tblVehicleEF	LDT2	0.04	0.06
tblVehicleEF	LDT2	0.55	0.64
tblVehicleEF	LDT2	2.25	2.73
tblVehicleEF	LDT2	249.80	304.99
tblVehicleEF	LDT2	53.79	77.16
tblVehicleEF	LDT2	4.0490e-003	4.5006e-003
tblVehicleEF	LDT2	0.02	0.03
tblVehicleEF	LDT2	0.03	0.04
tblVehicleEF	LDT2	0.17	0.25
tblVehicleEF	LDT2	0.04	8.8377e-003
tblVehicleEF	LDT2	8.0000e-003	8.0000e-003
tblVehicleEF	LDT2	1.0100e-003	9.8896e-004

Milpitas Blvd. Bridge - Existing Use Ops Analysis - Santa Clara County, Annual

EMFAC Off-Model Adjustment Factors for Gasoline Light Duty Vehicle to Account for the SAFE Vehicle Rule Not Applied

tblVehicleEF	LDT2	1.3400e-003	1.6579e-003
tblVehicleEF	LDT2	0.02	3.0932e-003
tblVehicleEF	LDT2	2.0000e-003	2.0000e-003
tblVehicleEF	LDT2	9.3000e-004	9.0987e-004
tblVehicleEF	LDT2	1.2320e-003	1.5244e-003
tblVehicleEF	LDT2	0.05	0.25
tblVehicleEF	LDT2	0.09	0.06
tblVehicleEF	LDT2	0.05	0.00
tblVehicleEF	LDT2	6.5290e-003	6.8652e-003
tblVehicleEF	LDT2	0.05	0.19
tblVehicleEF	LDT2	0.18	0.27
tblVehicleEF	LDT2	2.4710e-003	3.0147e-003
tblVehicleEF	LDT2	5.3200e-004	7.6281e-004
tblVehicleEF	LDT2	0.05	0.25
tblVehicleEF	LDT2	0.09	0.06
tblVehicleEF	LDT2	0.05	0.00
tblVehicleEF	LDT2	9.4890e-003	0.01
tblVehicleEF	LDT2	0.05	0.19
tblVehicleEF	LDT2	0.20	0.29
tblVehicleEF	LHD1	4.1480e-003	4.3354e-003
tblVehicleEF	LHD1	5.1950e-003	4.0282e-003
tblVehicleEF	LHD1	9.0230e-003	0.02
tblVehicleEF	LHD1	0.18	0.18
tblVehicleEF	LHD1	0.47	0.54
tblVehicleEF	LHD1	0.89	2.05
tblVehicleEF	LHD1	8.25	7.81
tblVehicleEF	LHD1	698.55	665.93
tblVehicleEF	LHD1	10.09	15.88
tblVehicleEF	LHD1	7.2900e-004	5.8852e-004

Milpitas Blvd. Bridge - Existing Use Ops Analysis - Santa Clara County, Annual

EMFAC Off-Model Adjustment Factors for Gasoline Light Duty Vehicle to Account for the SAFE Vehicle Rule Not Applied

tblVehicleEF	LHD1	0.04	0.04
tblVehicleEF	LHD1	0.02	0.03
tblVehicleEF	LHD1	0.05	0.04
tblVehicleEF	LHD1	0.30	0.31
tblVehicleEF	LHD1	0.23	0.33
tblVehicleEF	LHD1	9.1500e-004	6.6564e-004
tblVehicleEF	LHD1	0.08	0.07
tblVehicleEF	LHD1	9.9010e-003	9.3434e-003
tblVehicleEF	LHD1	7.0190e-003	9.1889e-003
tblVehicleEF	LHD1	2.1000e-004	1.3386e-004
tblVehicleEF	LHD1	8.7500e-004	6.3684e-004
tblVehicleEF	LHD1	0.03	0.03
tblVehicleEF	LHD1	2.4750e-003	2.3359e-003
tblVehicleEF	LHD1	6.6710e-003	8.7606e-003
tblVehicleEF	LHD1	1.9300e-004	1.2308e-004
tblVehicleEF	LHD1	1.4030e-003	0.09
tblVehicleEF	LHD1	0.05	0.02
tblVehicleEF	LHD1	0.02	0.02
tblVehicleEF	LHD1	7.7200e-004	0.00
tblVehicleEF	LHD1	0.07	0.05
tblVehicleEF	LHD1	0.18	0.12
tblVehicleEF	LHD1	0.04	0.08
tblVehicleEF	LHD1	8.0000e-005	7.6000e-005
tblVehicleEF	LHD1	6.8120e-003	6.4983e-003
tblVehicleEF	LHD1	1.0000e-004	1.5704e-004
tblVehicleEF	LHD1	1.4030e-003	0.09
tblVehicleEF	LHD1	0.05	0.02
tblVehicleEF	LHD1	0.02	0.02
tblVehicleEF	LHD1	7.7200e-004	0.00

Milpitas Blvd. Bridge - Existing Use Ops Analysis - Santa Clara County, Annual

EMFAC Off-Model Adjustment Factors for Gasoline Light Duty Vehicle to Account for the SAFE Vehicle Rule Not Applied

tblVehicleEF	LHD1	0.09	0.06
tblVehicleEF	LHD1	0.18	0.12
tblVehicleEF	LHD1	0.05	0.09
tblVehicleEF	LHD2	2.5050e-003	2.5083e-003
tblVehicleEF	LHD2	5.3390e-003	4.4567e-003
tblVehicleEF	LHD2	4.8110e-003	8.7205e-003
tblVehicleEF	LHD2	0.13	0.14
tblVehicleEF	LHD2	0.49	0.38
tblVehicleEF	LHD2	0.48	1.11
tblVehicleEF	LHD2	13.00	13.36
tblVehicleEF	LHD2	679.81	713.03
tblVehicleEF	LHD2	6.44	8.54
tblVehicleEF	LHD2	1.6660e-003	1.6805e-003
tblVehicleEF	LHD2	0.06	0.07
tblVehicleEF	LHD2	0.01	0.02
tblVehicleEF	LHD2	0.07	0.08
tblVehicleEF	LHD2	0.38	0.50
tblVehicleEF	LHD2	0.12	0.18
tblVehicleEF	LHD2	1.5020e-003	1.4561e-003
tblVehicleEF	LHD2	0.09	0.09
tblVehicleEF	LHD2	0.01	0.01
tblVehicleEF	LHD2	0.01	0.02
tblVehicleEF	LHD2	1.0600e-004	5.6700e-005
tblVehicleEF	LHD2	1.4370e-003	1.3932e-003
tblVehicleEF	LHD2	0.04	0.03
tblVehicleEF	LHD2	2.7110e-003	2.6336e-003
tblVehicleEF	LHD2	0.01	0.02
tblVehicleEF	LHD2	9.8000e-005	5.2200e-005
tblVehicleEF	LHD2	6.4200e-004	0.05

Milpitas Blvd. Bridge - Existing Use Ops Analysis - Santa Clara County, Annual

EMFAC Off-Model Adjustment Factors for Gasoline Light Duty Vehicle to Account for the SAFE Vehicle Rule Not Applied

tblVehicleEF	LHD2	0.02	0.01
tblVehicleEF	LHD2	0.01	0.01
tblVehicleEF	LHD2	3.7400e-004	0.00
tblVehicleEF	LHD2	0.10	0.08
tblVehicleEF	LHD2	0.06	0.07
tblVehicleEF	LHD2	0.02	0.04
tblVehicleEF	LHD2	1.2400e-004	1.2789e-004
tblVehicleEF	LHD2	6.5570e-003	6.8595e-003
tblVehicleEF	LHD2	6.4000e-005	8.4500e-005
tblVehicleEF	LHD2	6.4200e-004	0.05
tblVehicleEF	LHD2	0.02	0.01
tblVehicleEF	LHD2	0.02	0.02
tblVehicleEF	LHD2	3.7400e-004	0.00
tblVehicleEF	LHD2	0.11	0.10
tblVehicleEF	LHD2	0.06	0.07
tblVehicleEF	LHD2	0.02	0.05
tblVehicleEF	MCY	0.32	0.14
tblVehicleEF	MCY	0.25	0.16
tblVehicleEF	MCY	17.61	11.05
tblVehicleEF	MCY	9.20	7.83
tblVehicleEF	MCY	209.76	185.58
tblVehicleEF	MCY	59.23	42.83
tblVehicleEF	MCY	0.07	0.04
tblVehicleEF	MCY	0.02	6.3407e-003
tblVehicleEF	MCY	1.14	0.51
tblVehicleEF	MCY	0.27	0.10
tblVehicleEF	MCY	0.01	0.01
tblVehicleEF	MCY	4.0000e-003	4.0000e-003
tblVehicleEF	MCY	2.1380e-003	1.9967e-003

Milpitas Blvd. Bridge - Existing Use Ops Analysis - Santa Clara County, Annual

EMFAC Off-Model Adjustment Factors for Gasoline Light Duty Vehicle to Account for the SAFE Vehicle Rule Not Applied

tblVehicleEF	MCY	2.8620e-003	3.4163e-003
tblVehicleEF	MCY	5.0400e-003	4.2000e-003
tblVehicleEF	MCY	1.9940e-003	1.8635e-003
tblVehicleEF	MCY	2.6760e-003	3.1969e-003
tblVehicleEF	MCY	0.89	3.68
tblVehicleEF	MCY	0.63	3.56
tblVehicleEF	MCY	0.47	0.00
tblVehicleEF	MCY	2.13	0.89
tblVehicleEF	MCY	0.46	3.78
tblVehicleEF	MCY	1.88	1.13
tblVehicleEF	MCY	2.0760e-003	1.8346e-003
tblVehicleEF	MCY	5.8600e-004	4.2344e-004
tblVehicleEF	MCY	0.89	0.08
tblVehicleEF	MCY	0.63	3.56
tblVehicleEF	MCY	0.47	0.00
tblVehicleEF	MCY	2.67	1.09
tblVehicleEF	MCY	0.46	3.78
tblVehicleEF	MCY	2.04	1.23
tblVehicleEF	MDV	1.7720e-003	2.0971e-003
tblVehicleEF	MDV	0.04	0.07
tblVehicleEF	MDV	0.54	0.66
tblVehicleEF	MDV	2.29	2.78
tblVehicleEF	MDV	301.13	364.04
tblVehicleEF	MDV	63.46	91.48
tblVehicleEF	MDV	5.2660e-003	5.4054e-003
tblVehicleEF	MDV	0.02	0.03
tblVehicleEF	MDV	0.04	0.05
tblVehicleEF	MDV	0.18	0.27
tblVehicleEF	MDV	0.04	8.8924e-003

Milpitas Blvd. Bridge - Existing Use Ops Analysis - Santa Clara County, Annual

EMFAC Off-Model Adjustment Factors for Gasoline Light Duty Vehicle to Account for the SAFE Vehicle Rule Not Applied

tblVehicleEF	MDV	8.0000e-003	8.0000e-003
tblVehicleEF	MDV	1.0200e-003	9.7072e-004
tblVehicleEF	MDV	1.3440e-003	1.6079e-003
tblVehicleEF	MDV	0.02	3.1123e-003
tblVehicleEF	MDV	2.0000e-003	2.0000e-003
tblVehicleEF	MDV	9.4000e-004	8.9404e-004
tblVehicleEF	MDV	1.2360e-003	1.4784e-003
tblVehicleEF	MDV	0.06	0.28
tblVehicleEF	MDV	0.10	0.07
tblVehicleEF	MDV	0.06	0.00
tblVehicleEF	MDV	6.8620e-003	8.0915e-003
tblVehicleEF	MDV	0.05	0.21
tblVehicleEF	MDV	0.20	0.30
tblVehicleEF	MDV	2.9760e-003	3.5970e-003
tblVehicleEF	MDV	6.2800e-004	9.0434e-004
tblVehicleEF	MDV	0.06	0.28
tblVehicleEF	MDV	0.10	0.07
tblVehicleEF	MDV	0.06	0.00
tblVehicleEF	MDV	9.9460e-003	0.01
tblVehicleEF	MDV	0.05	0.21
tblVehicleEF	MDV	0.22	0.33
tblVehicleEF	MH	5.0270e-003	6.0741e-003
tblVehicleEF	MH	0.02	0.02
tblVehicleEF	MH	0.31	0.37
tblVehicleEF	MH	1.64	1.92
tblVehicleEF	MH	1,350.27	1,656.25
tblVehicleEF	MH	15.54	20.13
tblVehicleEF	MH	0.05	0.07
tblVehicleEF	MH	0.03	0.03

EMFAC Off-Model Adjustment Factors for Gasoline Light Duty Vehicle to Account for the SAFE Vehicle Rule Not Applied

tblVehicleEF	MH	1.06	1.28
tblVehicleEF	MH	0.24	0.30
tblVehicleEF	MH	0.13	0.04
tblVehicleEF	MH	0.01	0.01
tblVehicleEF	MH	0.02	0.02
tblVehicleEF	MH	2.1200e-004	2.3307e-004
tblVehicleEF	MH	0.06	0.02
tblVehicleEF	MH	3.2970e-003	3.3357e-003
tblVehicleEF	MH	0.02	0.02
tblVehicleEF	MH	1.9500e-004	2.1430e-004
tblVehicleEF	MH	0.35	20.30
tblVehicleEF	MH	0.03	4.90
tblVehicleEF	MH	0.14	0.00
tblVehicleEF	MH	0.04	0.05
tblVehicleEF	MH	5.8500e-003	0.12
tblVehicleEF	MH	0.07	0.09
tblVehicleEF	MH	0.01	0.02
tblVehicleEF	MH	1.5400e-004	1.9899e-004
tblVehicleEF	MH	0.35	20.30
tblVehicleEF	MH	0.03	4.90
tblVehicleEF	MH	0.14	0.00
tblVehicleEF	MH	0.05	0.06
tblVehicleEF	MH	5.8500e-003	0.12
tblVehicleEF	MH	0.08	0.10
tblVehicleEF	MHD	3.8320e-003	0.02
tblVehicleEF	MHD	1.0340e-003	9.4648e-003
tblVehicleEF	MHD	8.3830e-003	6.5780e-003
tblVehicleEF	MHD	0.41	0.63
tblVehicleEF	MHD	0.15	0.16

EMFAC Off-Model Adjustment Factors for Gasoline Light Duty Vehicle to Account for the SAFE Vehicle Rule Not Applied

tblVehicleEF	MHD	0.87	0.72
tblVehicleEF	MHD	65.10	143.38
tblVehicleEF	MHD	993.45	1,074.54
tblVehicleEF	MHD	8.55	6.79
tblVehicleEF	MHD	9.3710e-003	0.02
tblVehicleEF	MHD	0.12	0.14
tblVehicleEF	MHD	7.7400e-003	4.7598e-003
tblVehicleEF	MHD	0.34	0.73
tblVehicleEF	MHD	1.43	0.58
tblVehicleEF	MHD	1.69	1.22
tblVehicleEF	MHD	1.6200e-004	6.5479e-004
tblVehicleEF	MHD	0.13	0.04
tblVehicleEF	MHD	0.01	0.01
tblVehicleEF	MHD	7.0060e-003	5.4200e-003
tblVehicleEF	MHD	1.1200e-004	8.2300e-005
tblVehicleEF	MHD	1.5500e-004	6.2582e-004
tblVehicleEF	MHD	0.06	0.02
tblVehicleEF	MHD	3.0000e-003	3.0000e-003
tblVehicleEF	MHD	6.6960e-003	5.1779e-003
tblVehicleEF	MHD	1.0300e-004	7.5600e-005
tblVehicleEF	MHD	2.8900e-004	0.01
tblVehicleEF	MHD	0.01	3.4196e-003
tblVehicleEF	MHD	0.02	0.02
tblVehicleEF	MHD	1.6800e-004	0.00
tblVehicleEF	MHD	0.01	0.01
tblVehicleEF	MHD	0.02	0.03
tblVehicleEF	MHD	0.04	0.03
tblVehicleEF	MHD	6.1800e-004	1.3196e-003
tblVehicleEF	MHD	9.4800e-003	0.01

Milpitas Blvd. Bridge - Existing Use Ops Analysis - Santa Clara County, Annual

EMFAC Off-Model Adjustment Factors for Gasoline Light Duty Vehicle to Account for the SAFE Vehicle Rule Not Applied

tblVehicleEF	MHD	8.5000e-005	6.7100e-005
tblVehicleEF	MHD	2.8900e-004	0.01
tblVehicleEF	MHD	0.01	3.4196e-003
tblVehicleEF	MHD	0.03	0.04
tblVehicleEF	MHD	1.6800e-004	0.00
tblVehicleEF	MHD	0.01	0.03
tblVehicleEF	MHD	0.02	0.03
tblVehicleEF	MHD	0.05	0.04
tblVehicleEF	OBUS	7.0980e-003	7.5210e-003
tblVehicleEF	OBUS	2.1970e-003	0.01
tblVehicleEF	OBUS	0.02	0.01
tblVehicleEF	OBUS	0.64	0.55
tblVehicleEF	OBUS	0.26	0.29
tblVehicleEF	OBUS	1.58	1.46
tblVehicleEF	OBUS	97.36	89.81
tblVehicleEF	OBUS	1,210.85	1,245.37
tblVehicleEF	OBUS	13.46	12.02
tblVehicleEF	OBUS	0.01	0.01
tblVehicleEF	OBUS	0.12	0.15
tblVehicleEF	OBUS	0.01	0.01
tblVehicleEF	OBUS	0.43	0.33
tblVehicleEF	OBUS	1.45	0.83
tblVehicleEF	OBUS	1.13	0.93
tblVehicleEF	OBUS	1.4200e-004	3.1074e-004
tblVehicleEF	OBUS	0.13	0.05
tblVehicleEF	OBUS	0.01	0.01
tblVehicleEF	OBUS	7.8820e-003	0.01
tblVehicleEF	OBUS	1.5600e-004	1.1806e-004
tblVehicleEF	OBUS	1.3600e-004	2.9717e-004

Milpitas Blvd. Bridge - Existing Use Ops Analysis - Santa Clara County, Annual

EMFAC Off-Model Adjustment Factors for Gasoline Light Duty Vehicle to Account for the SAFE Vehicle Rule Not Applied

tblVehicleEF	OBUS	0.06	0.02
tblVehicleEF	OBUS	3.0000e-003	3.0000e-003
tblVehicleEF	OBUS	7.5260e-003	0.01
tblVehicleEF	OBUS	1.4400e-004	1.0855e-004
tblVehicleEF	OBUS	1.0620e-003	0.07
tblVehicleEF	OBUS	0.02	0.01
tblVehicleEF	OBUS	0.05	0.04
tblVehicleEF	OBUS	4.8700e-004	0.00
tblVehicleEF	OBUS	0.02	0.03
tblVehicleEF	OBUS	0.05	0.08
tblVehicleEF	OBUS	0.08	0.07
tblVehicleEF	OBUS	9.2400e-004	8.4613e-004
tblVehicleEF	OBUS	0.01	0.01
tblVehicleEF	OBUS	1.3300e-004	1.1882e-004
tblVehicleEF	OBUS	1.0620e-003	0.07
tblVehicleEF	OBUS	0.02	0.01
tblVehicleEF	OBUS	0.06	0.05
tblVehicleEF	OBUS	4.8700e-004	0.00
tblVehicleEF	OBUS	0.02	0.05
tblVehicleEF	OBUS	0.05	0.08
tblVehicleEF	OBUS	0.08	0.08
tblVehicleEF	SBUS	0.07	0.08
tblVehicleEF	SBUS	4.4040e-003	0.09
tblVehicleEF	SBUS	6.3380e-003	5.2156e-003
tblVehicleEF	SBUS	2.93	1.82
tblVehicleEF	SBUS	0.37	0.72
tblVehicleEF	SBUS	0.86	0.67
tblVehicleEF	SBUS	337.48	181.81
tblVehicleEF	SBUS	970.50	941.81

Milpitas Blvd. Bridge - Existing Use Ops Analysis - Santa Clara County, Annual

EMFAC Off-Model Adjustment Factors for Gasoline Light Duty Vehicle to Account for the SAFE Vehicle Rule Not Applied

tblVehicleEF	SBUS	5.06	3.93
tblVehicleEF	SBUS	0.04	0.02
tblVehicleEF	SBUS	0.12	0.11
tblVehicleEF	SBUS	6.4910e-003	4.8476e-003
tblVehicleEF	SBUS	2.71	1.09
tblVehicleEF	SBUS	3.09	1.57
tblVehicleEF	SBUS	1.18	0.52
tblVehicleEF	SBUS	2.0480e-003	7.4627e-004
tblVehicleEF	SBUS	0.74	0.04
tblVehicleEF	SBUS	0.01	0.01
tblVehicleEF	SBUS	0.02	8.5750e-003
tblVehicleEF	SBUS	6.8000e-005	4.5800e-005
tblVehicleEF	SBUS	1.9600e-003	7.1267e-004
tblVehicleEF	SBUS	0.32	0.02
tblVehicleEF	SBUS	2.6690e-003	2.6104e-003
tblVehicleEF	SBUS	0.02	8.1872e-003
tblVehicleEF	SBUS	6.2000e-005	4.2100e-005
tblVehicleEF	SBUS	8.7000e-004	0.04
tblVehicleEF	SBUS	8.3040e-003	9.3352e-003
tblVehicleEF	SBUS	0.32	0.20
tblVehicleEF	SBUS	4.1400e-004	0.00
tblVehicleEF	SBUS	0.06	0.04
tblVehicleEF	SBUS	0.01	0.03
tblVehicleEF	SBUS	0.04	0.03
tblVehicleEF	SBUS	3.2190e-003	1.6395e-003
tblVehicleEF	SBUS	9.2880e-003	8.7391e-003
tblVehicleEF	SBUS	5.0000e-005	3.8800e-005
tblVehicleEF	SBUS	8.7000e-004	0.04
tblVehicleEF	SBUS	8.3040e-003	9.3352e-003

Milpitas Blvd. Bridge - Existing Use Ops Analysis - Santa Clara County, Annual

EMFAC Off-Model Adjustment Factors for Gasoline Light Duty Vehicle to Account for the SAFE Vehicle Rule Not Applied

tblVehicleEF	SBUS	0.46	0.32
tblVehicleEF	SBUS	4.1400e-004	0.00
tblVehicleEF	SBUS	0.07	0.13
tblVehicleEF	SBUS	0.01	0.03
tblVehicleEF	SBUS	0.04	0.03
tblVehicleEF	UBUS	1.86	0.63
tblVehicleEF	UBUS	2.1860e-003	2.5024e-003
tblVehicleEF	UBUS	14.11	7.38
tblVehicleEF	UBUS	0.14	0.53
tblVehicleEF	UBUS	1,668.67	969.99
tblVehicleEF	UBUS	1.40	3.03
tblVehicleEF	UBUS	0.28	0.15
tblVehicleEF	UBUS	1.2560e-003	4.5820e-003
tblVehicleEF	UBUS	0.71	0.26
tblVehicleEF	UBUS	0.02	0.03
tblVehicleEF	UBUS	0.07	0.15
tblVehicleEF	UBUS	0.03	0.06
tblVehicleEF	UBUS	5.1160e-003	4.8221e-003
tblVehicleEF	UBUS	1.5000e-005	1.2600e-005
tblVehicleEF	UBUS	0.03	0.05
tblVehicleEF	UBUS	8.3320e-003	0.01
tblVehicleEF	UBUS	4.8930e-003	4.6095e-003
tblVehicleEF	UBUS	1.4000e-005	1.1600e-005
tblVehicleEF	UBUS	6.1000e-005	7.0381e-003
tblVehicleEF	UBUS	8.1400e-004	2.0980e-003
tblVehicleEF	UBUS	3.6000e-005	0.00
tblVehicleEF	UBUS	0.03	0.05
tblVehicleEF	UBUS	1.7600e-004	7.8778e-003
tblVehicleEF	UBUS	9.2610e-003	8.3785e-003

Milpitas Blvd. Bridge - Existing Use Ops Analysis - Santa Clara County, Annual

EMFAC Off-Model Adjustment Factors for Gasoline Light Duty Vehicle to Account for the SAFE Vehicle Rule Not Applied

tblVehicleEF	UBUS	0.01	7.3894e-003
tblVehicleEF	UBUS	1.4000e-005	2.9900e-005
tblVehicleEF	UBUS	6.1000e-005	7.0381e-003
tblVehicleEF	UBUS	8.1400e-004	2.0980e-003
tblVehicleEF	UBUS	3.6000e-005	0.00
tblVehicleEF	UBUS	1.90	0.69
tblVehicleEF	UBUS	1.7600e-004	7.8778e-003
tblVehicleEF	UBUS	0.01	9.1734e-003
tblWater	AerobicPercent	87.46	100.00
tblWater	AerobicPercent	87.46	100.00
tblWater	AnaerobicandFacultativeLagoonsPercent	2.21	0.00
tblWater	AnaerobicandFacultativeLagoonsPercent	2.21	0.00
tblWater	SepticTankPercent	10.33	0.00
tblWater	SepticTankPercent	10.33	0.00

2.0 Emissions Summary

2.1 Overall Construction

Unmitigated Construction

	ROG	NOx	CO	SO2	Fugitive PM10	Exhaust PM10	PM10 Total	Fugitive PM2.5	Exhaust PM2.5	PM2.5 Total	Bio- CO2	NBio- CO2	Total CO2	CH4	N2O	CO2e
Year	tons/yr										MT/yr					
2023	0.0000	0.0000	0.0000	0.0000	0.0000	0.0000	0.0000	0.0000	0.0000	0.0000	0.0000	0.0000	0.0000	0.0000	0.0000	0.0000
2024	0.0000	0.0000	0.0000	0.0000	0.0000	0.0000	0.0000	0.0000	0.0000	0.0000	0.0000	0.0000	0.0000	0.0000	0.0000	0.0000
Maximum	**0.0000**	**0.0000**	**0.0000**	**0.0000**	**0.0000**	**0.0000**	**0.0000**	**0.0000**	**0.0000**	**0.0000**	**0.0000**	**0.0000**	**0.0000**	**0.0000**	**0.0000**	**0.0000**

Date: 11/8/2021 4:30 PM

Milpitas Blvd. Bridge - Existing Use Ops Analysis - Santa Clara County, Annual

EMFAC Off-Model Adjustment Factors for Gasoline Light Duty Vehicle to Account for the SAFE Vehicle Rule Not Applied

Mitigated Construction

	ROG	NOx	CO	SO2	Fugitive PM10	Exhaust PM10	PM10 Total	Fugitive PM2.5	Exhaust PM2.5	PM2.5 Total	Bio- CO2	NBio- CO2	Total CO2	CH4	N2O	CO2e
Year	tons/yr										MT/yr					
2023	0.0000	0.0000	0.0000	0.0000	0.0000	0.0000	0.0000	0.0000	0.0000	0.0000	0.0000	0.0000	0.0000	0.0000	0.0000	0.0000
2024	0.0000	0.0000	0.0000	0.0000	0.0000	0.0000	0.0000	0.0000	0.0000	0.0000	0.0000	0.0000	0.0000	0.0000	0.0000	0.0000
Maximum	**0.0000**	**0.0000**	**0.0000**	**0.0000**	**0.0000**	**0.0000**	**0.0000**	**0.0000**	**0.0000**	**0.0000**	**0.0000**	**0.0000**	**0.0000**	**0.0000**	**0.0000**	**0.0000**

	ROG	NOx	CO	SO2	Fugitive PM10	Exhaust PM10	PM10 Total	Fugitive PM2.5	Exhaust PM2.5	PM2.5 Total	Bio- CO2	NBio-CO2	Total CO2	CH4	N20	CO2e
Percent Reduction	**0.00**	**0.00**	**0.00**	**0.00**	**0.00**	**0.00**	**0.00**	**0.00**	**0.00**	**0.00**	**0.00**	**0.00**	**0.00**	**0.00**	**0.00**	**0.00**

Quarter	Start Date	End Date	Maximum Unmitigated ROG + NOX (tons/quarter)	Maximum Mitigated ROG + NOX (tons/quarter)
		Highest		

2.2 Overall Operational

Unmitigated Operational

	ROG	NOx	CO	SO2	Fugitive PM10	Exhaust PM10	PM10 Total	Fugitive PM2.5	Exhaust PM2.5	PM2.5 Total	Bio- CO2	NBio- CO2	Total CO2	CH4	N2O	CO2e
Category	tons/yr										MT/yr					

Date: 11/8/2021 4:30 PM

Milpitas Blvd. Bridge - Existing Use Ops Analysis - Santa Clara County, Annual

EMFAC Off-Model Adjustment Factors for Gasoline Light Duty Vehicle to Account for the SAFE Vehicle Rule Not Applied

Area	0.1951	1.0000e-005	1.6700e-003	0.0000		1.0000e-005	1.0000e-005		1.0000e-005	1.0000e-005	0.0000	3.2500e-003	3.2500e-003	1.0000e-005	0.0000	3.4600e-003
Energy	3.6100e-003	0.0328	0.0276	2.0000e-004		2.4900e-003	2.4900e-003		2.4900e-003	2.4900e-003	0.0000	105.8925	105.8925	0.0120	2.0300e-003	106.7987
Mobile	0.1464	0.0942	0.9435	2.4300e-003	0.2466	1.4100e-003	0.2480	0.0615	1.3200e-003	0.0628	0.0000	224.2862	224.2862	0.0104	9.9200e-003	227.5007
Waste						0.0000	0.0000		0.0000	0.0000	7.7989	0.0000	7.7989	0.4609	0.0000	19.3215
Water						0.0000	0.0000		0.0000	0.0000	2.5977	5.1331	7.7308	9.7700e-003	5.7500e-003	9.6885
Total	**0.3451**	**0.1270**	**0.9727**	**2.6300e-003**	**0.2466**	**3.9100e-003**	**0.2505**	**0.0615**	**3.8200e-003**	**0.0653**	**10.3966**	**335.3150**	**345.7116**	**0.4931**	**0.0177**	**363.3128**

Mitigated Operational

	ROG	NOx	CO	SO2	Fugitive PM10	Exhaust PM10	PM10 Total	Fugitive PM2.5	Exhaust PM2.5	PM2.5 Total	Bio- CO2	NBio- CO2	Total CO2	CH4	N2O	CO2e
Category	tons/yr										MT/yr					
Area	0.1951	1.0000e-005	1.6700e-003	0.0000		1.0000e-005	1.0000e-005		1.0000e-005	1.0000e-005	0.0000	3.2500e-003	3.2500e-003	1.0000e-005	0.0000	3.4600e-003
Energy	3.6100e-003	0.0328	0.0276	2.0000e-004		2.4900e-003	2.4900e-003		2.4900e-003	2.4900e-003	0.0000	105.8925	105.8925	0.0120	2.0300e-003	106.7987
Mobile	0.1464	0.0942	0.9435	2.4300e-003	0.2466	1.4100e-003	0.2480	0.0615	1.3200e-003	0.0628	0.0000	224.2862	224.2862	0.0104	9.9200e-003	227.5007
Waste						0.0000	0.0000		0.0000	0.0000	7.7989	0.0000	7.7989	0.4609	0.0000	19.3215
Water						0.0000	0.0000		0.0000	0.0000	2.5977	5.1331	7.7308	9.7700e-003	5.7500e-003	9.6885
Total	**0.3451**	**0.1270**	**0.9727**	**2.6300e-003**	**0.2466**	**3.9100e-003**	**0.2505**	**0.0615**	**3.8200e-003**	**0.0653**	**10.3966**	**335.3150**	**345.7116**	**0.4931**	**0.0177**	**363.3128**

	ROG	NOx	CO	SO2	Fugitive PM10	Exhaust PM10	PM10 Total	Fugitive PM2.5	Exhaust PM2.5	PM2.5 Total	Bio- CO2	NBio-CO2	Total CO2	CH4	N20	CO2e

Milpitas Blvd. Bridge - Existing Use Ops Analysis - Santa Clara County, Annual

EMFAC Off-Model Adjustment Factors for Gasoline Light Duty Vehicle to Account for the SAFE Vehicle Rule Not Applied

Percent Reduction	**0.00**	**0.00**	**0.00**	**0.00**	**0.00**	**0.00**	**0.00**	**0.00**	**0.00**	**0.00**	**0.00**	**0.00**	**0.00**	**0.00**	**0.00**	**0.00**

4.0 Operational Detail - Mobile

4.1 Mitigation Measures Mobile

	ROG	NOx	CO	SO2	Fugitive PM10	Exhaust PM10	PM10 Total	Fugitive PM2.5	Exhaust PM2.5	PM2.5 Total	Bio- CO2	NBio- CO2	Total CO2	CH4	N2O	CO2e
Category	tons/yr										MT/yr					
Mitigated	0.1464	0.0942	0.9435	2.4300e-003	0.2466	1.4100e-003	0.2480	0.0615	1.3200e-003	0.0628	0.0000	224.2862	224.2862	0.0104	9.9200e-003	227.5007
Unmitigated	0.1464	0.0942	0.9435	2.4300e-003	0.2466	1.4100e-003	0.2480	0.0615	1.3200e-003	0.0628	0.0000	224.2862	224.2862	0.0104	9.9200e-003	227.5007

4.2 Trip Summary Information

	Average Daily Trip Rate			Unmitigated	Mitigated
Land Use	Weekday	Saturday	Sunday	Annual VMT	Annual VMT
General Office Building	402.36	91.30	28.92	727,854	727,854
Parking Lot	0.00	0.00	0.00		
Total	402.36	91.30	28.92	727,854	727,854

4.3 Trip Type Information

	Miles			Trip %			Trip Purpose %		
Land Use	H-W or C-W	H-S or C-C	H-O or C-NW	H-W or C-W	H-S or C-C	H-O or C-NW	Primary	Diverted	Pass-by
General Office Building	9.50	7.30	7.30	33.00	48.00	19.00	77	19	4
Parking Lot	9.50	7.30	7.30	0.00	0.00	0.00	0	0	0

Milpitas Blvd. Bridge - Existing Use Ops Analysis - Santa Clara County, Annual

EMFAC Off-Model Adjustment Factors for Gasoline Light Duty Vehicle to Account for the SAFE Vehicle Rule Not Applied

4.4 Fleet Mix

Land Use	LDA	LDT1	LDT2	MDV	LHD1	LHD2	MHD	HHD	OBUS	UBUS	MCY	SBUS	MH
General Office Building	0.514977	0.035448	0.239576	0.135703	0.024260	0.006170	0.009659	0.007844	0.001064	0.000396	0.021950	0.000681	0.002272
Parking Lot	0.514977	0.035448	0.239576	0.135703	0.024260	0.006170	0.009659	0.007844	0.001064	0.000396	0.021950	0.000681	0.002272

5.0 Energy Detail

Historical Energy Use: N

5.1 Mitigation Measures Energy

	ROG	NOx	CO	SO2	Fugitive PM10	Exhaust PM10	PM10 Total	Fugitive PM2.5	Exhaust PM2.5	PM2.5 Total	Bio- CO2	NBio- CO2	Total CO2	CH4	N2O	CO2e
Category	tons/yr										MT/yr					
Electricity Mitigated						0.0000	0.0000		0.0000	0.0000	0.0000	70.1829	70.1829	0.0114	1.3800e-003	70.8768
Electricity Unmitigated						0.0000	0.0000		0.0000	0.0000	0.0000	70.1829	70.1829	0.0114	1.3800e-003	70.8768
NaturalGas Mitigated	3.6100e-003	0.0328	0.0276	2.0000e-004		2.4900e-003	2.4900e-003		2.4900e-003	2.4900e-003	0.0000	35.7096	35.7096	6.8000e-004	6.5000e-004	35.9219
NaturalGas Unmitigated	3.6100e-003	0.0328	0.0276	2.0000e-004		2.4900e-003	2.4900e-003		2.4900e-003	2.4900e-003	0.0000	35.7096	35.7096	6.8000e-004	6.5000e-004	35.9219

5.2 Energy by Land Use - NaturalGas

Unmitigated

Milpitas Blvd. Bridge - Existing Use Ops Analysis - Santa Clara County, Annual

EMFAC Off-Model Adjustment Factors for Gasoline Light Duty Vehicle to Account for the SAFE Vehicle Rule Not Applied

	NaturalGas Use	ROG	NOx	CO	SO2	Fugitive PM10	Exhaust PM10	PM10 Total	Fugitive PM2.5	Exhaust PM2.5	PM2.5 Total	Bio- CO2	NBio- CO2	Total CO2	CH4	N2O	CO2e
Land Use	kBTU/yr	tons/yr										MT/yr					
General Office Building	669173	3.6100e-003	0.0328	0.0276	2.0000e-004		2.4900e-003	2.4900e-003		2.4900e-003	2.4900e-003	0.0000	35.7096	35.7096	6.8000e-004	6.5000e-004	35.9219
Parking Lot	0	0.0000	0.0000	0.0000	0.0000		0.0000	0.0000		0.0000	0.0000	0.0000	0.0000	0.0000	0.0000	0.0000	0.0000
Total		**3.6100e-003**	**0.0328**	**0.0276**	**2.0000e-004**		**2.4900e-003**	**2.4900e-003**		**2.4900e-003**	**2.4900e-003**	**0.0000**	**35.7096**	**35.7096**	**6.8000e-004**	**6.5000e-004**	**35.9219**

Mitigated

	NaturalGas Use	ROG	NOx	CO	SO2	Fugitive PM10	Exhaust PM10	PM10 Total	Fugitive PM2.5	Exhaust PM2.5	PM2.5 Total	Bio- CO2	NBio- CO2	Total CO2	CH4	N2O	CO2e
Land Use	kBTU/yr	tons/yr										MT/yr					
General Office Building	669173	3.6100e-003	0.0328	0.0276	2.0000e-004		2.4900e-003	2.4900e-003		2.4900e-003	2.4900e-003	0.0000	35.7096	35.7096	6.8000e-004	6.5000e-004	35.9219
Parking Lot	0	0.0000	0.0000	0.0000	0.0000		0.0000	0.0000		0.0000	0.0000	0.0000	0.0000	0.0000	0.0000	0.0000	0.0000
Total		**3.6100e-003**	**0.0328**	**0.0276**	**2.0000e-004**		**2.4900e-003**	**2.4900e-003**		**2.4900e-003**	**2.4900e-003**	**0.0000**	**35.7096**	**35.7096**	**6.8000e-004**	**6.5000e-004**	**35.9219**

5.3 Energy by Land Use - Electricity

Unmitigated

	Electricity Use	Total CO2	CH4	N2O	CO2e

Milpitas Blvd. Bridge - Existing Use Ops Analysis - Santa Clara County, Annual

EMFAC Off-Model Adjustment Factors for Gasoline Light Duty Vehicle to Account for the SAFE Vehicle Rule Not Applied

Land Use	kWh/yr	MT/yr			
General Office Building	709241	65.6217	0.0106	1.2900e-003	66.2706
Parking Lot	49297.5	4.5612	7.4000e-004	9.0000e-005	4.6063
Total		**70.1829**	**0.0114**	**1.3800e-003**	**70.8768**

Mitigated

	Electricity Use	Total CO2	CH4	N2O	CO2e
Land Use	kWh/yr	MT/yr			
General Office Building	709241	65.6217	0.0106	1.2900e-003	66.2706
Parking Lot	49297.5	4.5612	7.4000e-004	9.0000e-005	4.6063
Total		**70.1829**	**0.0114**	**1.3800e-003**	**70.8768**

6.0 Area Detail

6.1 Mitigation Measures Area

Date: 11/8/2021 4:30 PM

Milpitas Blvd. Bridge - Existing Use Ops Analysis - Santa Clara County, Annual

EMFAC Off-Model Adjustment Factors for Gasoline Light Duty Vehicle to Account for the SAFE Vehicle Rule Not Applied

	ROG	NOx	CO	SO2	Fugitive PM10	Exhaust PM10	PM10 Total	Fugitive PM2.5	Exhaust PM2.5	PM2.5 Total	Bio- CO2	NBio- CO2	Total CO2	CH4	N2O	CO2e
Category	tons/yr										MT/yr					
Mitigated	0.1951	1.0000e-005	1.6700e-003	0.0000		1.0000e-005	1.0000e-005		1.0000e-005	1.0000e-005	0.0000	3.2500e-003	3.2500e-003	1.0000e-005	0.0000	3.4600e-003
Unmitigated	0.1951	1.0000e-005	1.6700e-003	0.0000		1.0000e-005	1.0000e-005		1.0000e-005	1.0000e-005	0.0000	3.2500e-003	3.2500e-003	1.0000e-005	0.0000	3.4600e-003

6.2 Area by SubCategory

Unmitigated

	ROG	NOx	CO	SO2	Fugitive PM10	Exhaust PM10	PM10 Total	Fugitive PM2.5	Exhaust PM2.5	PM2.5 Total	Bio- CO2	NBio- CO2	Total CO2	CH4	N2O	CO2e
SubCategory	tons/yr										MT/yr					
Architectural Coating	0.0245					0.0000	0.0000		0.0000	0.0000	0.0000	0.0000	0.0000	0.0000	0.0000	0.0000
Consumer Products	0.1704					0.0000	0.0000		0.0000	0.0000	0.0000	0.0000	0.0000	0.0000	0.0000	0.0000
Landscaping	1.5000e-004	1.0000e-005	1.6700e-003	0.0000		1.0000e-005	1.0000e-005		1.0000e-005	1.0000e-005	0.0000	3.2500e-003	3.2500e-003	1.0000e-005	0.0000	3.4600e-003
Total	**0.1951**	**1.0000e-005**	**1.6700e-003**	**0.0000**		**1.0000e-005**	**1.0000e-005**		**1.0000e-005**	**1.0000e-005**	**0.0000**	**3.2500e-003**	**3.2500e-003**	**1.0000e-005**	**0.0000**	**3.4600e-003**

Mitigated

	ROG	NOx	CO	SO2	Fugitive PM10	Exhaust PM10	PM10 Total	Fugitive PM2.5	Exhaust PM2.5	PM2.5 Total	Bio- CO2	NBio- CO2	Total CO2	CH4	N2O	CO2e

Milpitas Blvd. Bridge - Existing Use Ops Analysis - Santa Clara County, Annual

EMFAC Off-Model Adjustment Factors for Gasoline Light Duty Vehicle to Account for the SAFE Vehicle Rule Not Applied

SubCategory	tons/yr										MT/yr					
Architectural Coating	0.0245					0.0000	0.0000		0.0000	0.0000	0.0000	0.0000	0.0000	0.0000	0.0000	0.0000
Consumer Products	0.1704					0.0000	0.0000		0.0000	0.0000	0.0000	0.0000	0.0000	0.0000	0.0000	0.0000
Landscaping	1.5000e-004	1.0000e-005	1.6700e-003	0.0000		1.0000e-005	1.0000e-005		1.0000e-005	1.0000e-005	0.0000	3.2500e-003	3.2500e-003	1.0000e-005	0.0000	3.4600e-003
Total	**0.1951**	**1.0000e-005**	**1.6700e-003**	**0.0000**		**1.0000e-005**	**1.0000e-005**		**1.0000e-005**	**1.0000e-005**	**0.0000**	**3.2500e-003**	**3.2500e-003**	**1.0000e-005**	**0.0000**	**3.4600e-003**

7.0 Water Detail

7.1 Mitigation Measures Water

	Total CO2	CH4	N2O	CO2e
Category	MT/yr			
Mitigated	7.7308	9.7700e-003	5.7500e-003	9.6885
Unmitigated	7.7308	9.7700e-003	5.7500e-003	9.6885

7.2 Water by Land Use

Unmitigated

Milpitas Blvd. Bridge - Existing Use Ops Analysis - Santa Clara County, Annual

EMFAC Off-Model Adjustment Factors for Gasoline Light Duty Vehicle to Account for the SAFE Vehicle Rule Not Applied

	Indoor/Outdoor Use	Total CO2	CH4	N2O	CO2e
Land Use	Mgal	MT/yr			
General Office Building	7.34218 / 4.50005	7.7308	9.7700e-003	5.7500e-003	9.6885
Parking Lot	0 / 0	0.0000	0.0000	0.0000	0.0000
Total		**7.7308**	**9.7700e-003**	**5.7500e-003**	**9.6885**

Mitigated

	Indoor/Outdoor Use	Total CO2	CH4	N2O	CO2e
Land Use	Mgal	MT/yr			
General Office Building	7.34218 / 4.50005	7.7308	9.7700e-003	5.7500e-003	9.6885
Parking Lot	0 / 0	0.0000	0.0000	0.0000	0.0000
Total		**7.7308**	**9.7700e-003**	**5.7500e-003**	**9.6885**

8.0 Waste Detail

8.1 Mitigation Measures Waste

Category/Year

Milpitas Blvd. Bridge - Existing Use Ops Analysis - Santa Clara County, Annual

EMFAC Off-Model Adjustment Factors for Gasoline Light Duty Vehicle to Account for the SAFE Vehicle Rule Not Applied

	Total CO2	CH4	N2O	CO2e
	MT/yr			
Mitigated	7.7989	0.4609	0.0000	19.3215
Unmitigated	7.7989	0.4609	0.0000	19.3215

8.2 Waste by Land Use

Unmitigated

	Waste Disposed	Total CO2	CH4	N2O	CO2e
Land Use	tons	MT/yr			
General Office Building	38.42	7.7989	0.4609	0.0000	19.3215
Parking Lot	0	0.0000	0.0000	0.0000	0.0000
Total		**7.7989**	**0.4609**	**0.0000**	**19.3215**

Mitigated

	Waste Disposed	Total CO2	CH4	N2O	CO2e

Date: 11/8/2021 4:30 PM

Milpitas Blvd. Bridge - Existing Use Ops Analysis - Santa Clara County, Annual

EMFAC Off-Model Adjustment Factors for Gasoline Light Duty Vehicle to Account for the SAFE Vehicle Rule Not Applied

Land Use	tons	MT/yr			
General Office Building	38.42	7.7989	0.4609	0.0000	19.3215
Parking Lot	0	0.0000	0.0000	0.0000	0.0000
Total		**7.7989**	**0.4609**	**0.0000**	**19.3215**

9.0 Operational Offroad

Equipment Type	Number	Hours/Day	Days/Year	Horse Power	Load Factor	Fuel Type

10.0 Stationary Equipment

Fire Pumps and Emergency Generators

Equipment Type	Number	Hours/Day	Hours/Year	Horse Power	Load Factor	Fuel Type

Boilers

Equipment Type	Number	Heat Input/Day	Heat Input/Year	Boiler Rating	Fuel Type

User Defined Equipment

Equipment Type	Number

11.0 Vegetation

CalEEMod EMFAC2021 Fleet Mix Input - 2030

FleetMixLandUseSubType	LDA	LDT1	LDT2	MDV	LHD1	LHD2	MHD	HHD	OBUS	UBUS	MCY
	0.514977	0.035448	0.239576	0.135703	0.02426	0.00617	0.009659	0.007844	0.001064	0.000396	0.02195

SBUS	MH
0.000681	0.002272

CalEEMod EMFAC2021 Emission Factors Input - 2030

Season	EmissionType	LDA	LDT1	LDT2	MDV	LHD1	LHD2	MHD	HHD	OBUS	UBUS	MCY	SBUS	MH
A	CH4_IDLEX	0	0	0	0	0.004335	0.002508	0.015544	0.200689575	0.007521	0	0	0.081907	0
A	CH4_RUNEX	0.001251	0.003273	0.001878	0.002097	0.004028	0.004457	0.009465	0.087739612	0.010745	0.633168094	0.142987	0.08726	0.006074
A	CH4_STREX	0.045719	0.070684	0.060357	0.065129	0.016442	0.00872	0.006578	4.40093E-08	0.013432	0.002502449	0.157242	0.005216	0.022777
A	CO_IDLEX	0	0	0	0	0.182077	0.135546	0.628457	4.997868655	0.549826	0	0	1.823721	0
A	CO_RUNEX	0.484447	0.895501	0.639473	0.660784	0.544761	0.383737	0.155266	0.628349624	0.288528	7.378159276	11.04655	0.716417	0.371762
A	CO_STREX	2.08878	3.413929	2.729559	2.781248	2.051418	1.109837	0.71851	0.00087263	1.464305	0.531636543	7.830862	0.671301	1.918466
A	CO2_NBIO_IDLEX	0	0	0	0	7.808851	13.36322	143.3801	719.710734	89.80588	0	0	181.8136	0
A	CO2_NBIO_RUNEX	218.6415	296.0222	304.9904	364.0422	665.9344	713.025	1074.538	1395.928332	1245.372	969.9926525	185.5769	941.807	1656.25
A	CO2_NBIO_STREX	55.99265	76.24029	77.1602	91.4769	15.88489	8.544837	6.787068	0.009437452	12.01881	3.025945099	42.83228	3.929487	20.12804
A	NOX_IDLEX	0	0	0	0	0.036306	0.076255	0.72827	3.806064714	0.333548	0	0	1.088868	0
A	NOX_RUNEX	0.023158	0.066035	0.041164	0.048222	0.312391	0.495733	0.584719	1.446947564	0.825827	0.255958394	0.509869	1.567888	1.278466
A	NOX_STREX	0.178975	0.272625	0.247045	0.271696	0.32724	0.178285	1.220957	2.603954429	0.931305	0.025581732	0.103081	0.520702	0.298107
A	PM10_IDLEX	0	0	0	0	0.000666	0.001456	0.000655	0.001737607	0.000311	0	0	0.000746	0
A	PM10_PMBW	0.007078	0.009138	0.008838	0.008892	0.0744	0.086908	0.04333	0.082108579	0.049981	0.147119217	0.012	0.043749	0.04494
A	PM10_PMTW	0.008	0.008	0.008	0.008	0.009343	0.010534	0.012	0.035145225	0.012	0.05700071	0.004	0.010442	0.013343
A	PM10_RUNEX	0.000838	0.00126	0.000989	0.000971	0.009189	0.01687	0.00542	0.023402177	0.012621	0.004822062	0.001997	0.008575	0.022807
A	PM10_STREX	0.001482	0.002074	0.001658	0.001608	0.000134	5.67E-05	8.23E-05	1.43954E-07	0.000118	1.26121E-05	0.003416	4.58E-05	0.000233
A	PM25_IDLEX	0	0	0	0	0.000637	0.001393	0.000626	0.001655588	0.000297	0	0	0.000713	0
A	PM25_PMBW	0.002477	0.003198	0.003093	0.003112	0.02604	0.030418	0.015165	0.028738003	0.017493	0.051491726	0.0042	0.015312	0.015729
A	PM25_PMTW	0.002	0.002	0.002	0.002	0.002336	0.002634	0.003	0.008786306	0.003	0.014250178	0.001	0.00261	0.003336
A	PM25_RUNEX	0.000771	0.001159	0.00091	0.000894	0.008761	0.016127	0.005178	0.022386582	0.012067	0.00460949	0.001864	0.008187	0.021783
A	PM25_STREX	0.001362	0.001907	0.001524	0.001478	0.000123	5.22E-05	7.56E-05	1.3236E-07	0.000109	1.15963E-05	0.003197	4.21E-05	0.000214
A	ROG_DIURN	0.227323	0.469769	0.248439	0.276762	0.087274	0.048494	0.014918	4.02275E-05	0.069383	0.007038146	3.680755	0.041692	20.29626
A	ROG_HTSK	0.060745	0.120653	0.063468	0.068938	0.020831	0.011136	0.00342	1.26947E-05	0.014014	0.002098044	3.555147	0.009335	4.900484
A	ROG_IDLEX	0	0	0	0	0.01758	0.01365	0.020875	0.311156106	0.039789	0	0	0.197824	0
A	ROG_RESTL	0	0	0	0	0	0	0	0	0	0	0	0	0
A	ROG_RUNEX	0.00434	0.013675	0.006865	0.008091	0.050519	0.082873	0.014952	0.014289903	0.031966	0.05310504	0.890508	0.040189	0.050568
A	ROG_RUNLS	0.170881	0.355945	0.18526	0.207423	0.123377	0.065349	0.028627	0.000113992	0.077263	0.007877766	3.783469	0.027699	0.119258
A	ROG_STREX	0.197184	0.337555	0.26551	0.301161	0.07823	0.041209	0.034167	2.38553E-07	0.071386	0.008378471	1.134366	0.029472	0.088942
A	SO2_IDLEX	0	0	0	0	7.6E-05	0.000128	0.00132	0.006214699	0.000846	0	0	0.001639	0
A	SO2_RUNEX	0.002161	0.002926	0.003015	0.003597	0.006498	0.00686	0.010167	0.012580529	0.011835	0.007389377	0.001835	0.008739	0.016224
A	SO2_STREX	0.000554	0.000754	0.000763	0.000904	0.000157	8.45E-05	6.71E-05	9.32988E-08	0.000119	2.99145E-05	0.000423	3.88E-05	0.000199
A	TOG_DIURN	0.227323	0.469769	0.248439	0.276762	0.087274	0.048494	0.014918	4.02275E-05	0.069383	0.007038146	0.080793	0.041692	20.29626
A	TOG_HTSK	0.060745	0.120653	0.063468	0.068938	0.020831	0.011136	0.00342	1.26947E-05	0.014014	0.002098044	3.555147	0.009335	4.900484
A	TOG_IDLEX	0	0	0	0	0.0248	0.018097	0.03926	0.541395418	0.052568	0	0	0.32342	0
A	TOG_RESTL	0	0	0	0	0	0	0	0	0	0	0	0	0
A	TOG_RUNEX	0.006329	0.019954	0.010004	0.011775	0.060583	0.095343	0.026358	0.103810529	0.046832	0.694289379	1.091848	0.133799	0.062589
A	TOG_RUNLS	0.170881	0.355945	0.18526	0.207423	0.123377	0.065349	0.028627	0.000113992	0.077263	0.007877766	3.783469	0.027699	0.119258
A	TOG_STREX	0.215892	0.36958	0.2907	0.329734	0.085652	0.045119	0.037409	2.61185E-07	0.078158	0.009173371	1.234067	0.032269	0.097381
A	N2O_IDLEX	0	0	0	0	0.000589	0.00168	0.022195	0.116327365	0.013129	0	0	0.023481	0
A	N2O_RUNEX	0.003165	0.00587	0.004501	0.005405	0.035467	0.074134	0.137514	0.223022009	0.151496	0.151061958	0.036967	0.112558	0.068485
A	N2O_STREX	0.025397	0.032408	0.031653	0.032172	0.028461	0.015119	0.00476	3.77164E-06	0.011347	0.00458201	0.006341	0.004848	0.033159

Attachment 3: Project Operations Emissions Calculations

Vehicle Category	VMT Fraction Across Category	Diesel VMT Fraction Within Category	Gas VMT Fraction Within Category
Truck 1	0.029	0.495	0.505
Truck 2	0.017	0.937	0.048
Non-Truck	0.954	0.014	0.955

	<= 5 mph	10 mph	15 mph	20 mph	25 mph	30 mph	35 mph	40 mph	45 mph
PM2_5 Ex									
Dsl									
NonTruck	0.000519025	0.000418211	0.000308436	0.00023232	0.00019271	0.00016993	0.000156988	0.000153	0.000156
Truck1	0.038241407	0.031165753	0.025617735	0.021153089	0.01752134	0.01457783	0.012237826	0.010452	0.009193
Truck2	0.023786596	0.019648679	0.013640291	0.009792214	0.00808297	0.00754693	0.007809315	0.00887	0.010731
Gas									
NonTruck	0.008380317	0.005287246	0.003518682	0.002469804	0.00182821	0.00142701	0.001174443	0.001019	0.000932
Truck1	0.001924741	0.001376549	0.001031064	0.000802919	0.00064765	0.00054133	0.0004707	0.000428	0.00041
Truck2	0.000337853	0.000212955	0.00014161	9.93411E-05	7.3516E-05	5.7391E-05	4.72597E-05	4.11E-05	3.76E-05
PM2.5 Running Exh	**0.010064905**	**0.006724381**	**0.004658179**	**0.003382706**	**0.00259352**	**0.00209121**	**0.001772294**	**0.001585**	**0.0015**
DPM Running Exha	**0.00125173**	**0.001031982**	**0.000814892**	**0.000657131**	**0.00056232**	**0.00050925**	**0.000485368**	**0.000488**	**0.000514**

	<= 5 mph	10 mph	15 mph	20 mph	25 mph	30 mph	35 mph	40 mph	45 mph
PM10 Ex									
Dsl									
NonTruck	0.000542492	0.000437121	0.000322382	0.000242824	0.00020142	0.00017761	0.000164086	0.000159	0.000163
Truck1	0.039970514	0.03257493	0.026776055	0.022109537	0.01831357	0.01523698	0.012791166	0.010924	0.009608
Truck2	0.02486212	0.020537106	0.014257044	0.010234975	0.00844845	0.00788817	0.008162418	0.009271	0.011216
Gas									
NonTruck	0.00911353	0.005749826	0.003826522	0.002685873	0.00198815	0.00155184	0.00127718	0.001108	0.001014
Truck1	0.002093331	0.001497123	0.001121376	0.000873247	0.00070438	0.00058875	0.00051193	0.000466	0.000446
Truck2	0.000367446	0.000231608	0.000154013	0.000108043	7.9956E-05	6.2418E-05	5.13992E-05	4.46E-05	4.09E-05
PM10 Running Exh	**0.010860599**	**0.007243504**	**0.005012068**	**0.003636309**	**0.00278535**	**0.00224401**	**0.001900392**	**0.001698**	**0.001606**
TOG Ex									
Dsl									
NonTruck	0.004461989	0.003292667	0.001792823	0.000942595	0.00068376	0.00055872	0.000471583	0.00041	0.000369
Truck1	0.205483607	0.169186043	0.141168744	0.118711022	0.10027894	0.08498668	0.07231525	0.061962	0.053759
Truck2	0.184182681	0.119389443	0.060975557	0.033812869	0.0247627	0.01987114	0.016209849	0.013746	0.01245
Gas									
NonTruck	0.141082716	0.090050002	0.060605954	0.042991364	0.03212929	0.02528811	0.020955613	0.018279	0.016782
Truck1	0.088378875	0.059384219	0.041808141	0.030736591	0.02354925	0.01880399	0.01568774	0.013738	0.012697
Truck2	0.027109942	0.017170313	0.011473141	0.00808717	0.00601274	0.00471475	0.003898603	0.003399	0.003125
TOG Running Exha	**0.150963635**	**0.09799896**	**0.066066391**	**0.046959278**	**0.03541786**	**0.02808576**	**0.023335476**	**0.020317**	**0.018555**
DEOG Running Exh	**0.01394394**	**0.010050112**	**0.005409547**	**0.002736885**	**0.00189755**	**0.0014995**	**0.001234477**	**0.001057**	**0.000946**
ROG Ex									
Dsl									
NonTruck	0.003919424	0.002892289	0.001574822	0.00082798	0.00060062	0.00049078	0.000164086	0.000159	0.000163
Truck1	0.1804968	0.14861302	0.124002625	0.104275762	0.08808502	0.0746523	0.012791166	0.010924	0.009608
Truck2	0.161787437	0.104872574	0.053561383	0.029701475	0.02175174	0.01745496	0.008162418	0.009271	0.011216
Gas									
NonTruck	0.101016105	0.064543447	0.043484797	0.030878583	0.02310095	0.01820093	0.00127718	0.001108	0.001014
Truck1	0.060566761	0.040696487	0.028651458	0.021064036	0.01613849	0.01288653	0.00051193	0.000466	0.000446
Truck2	0.018578664	0.011766955	0.007862637	0.005542203	0.00412058	0.00323106	5.13992E-05	4.46E-05	4.09E-05
ROG Running Exha	**0.110165562**	**0.07180654**	**0.048458053**	**0.034482057**	**0.02607361**	**0.02072218**	**0.001900392**	**0.001698**	**0.001606**
NOx Ex									
Dsl									
NonTruck	0.032160113	0.024937447	0.01718601	0.013171581	0.01098323	0.00932308	0.008058634	0.007161	0.006616
Truck1	0.914759599	0.84654122	0.787788761	0.738478111	0.69858303	0.66807586	0.646922552	0.63509	0.632547
Truck2	7.818830478	5.725324901	3.832322392	2.989904998	2.34103156	1.83436415	1.439566792	1.156328	0.984465
Gas									
NonTruck	0.107715771	0.092773909	0.081406286	0.072742907	0.06617543	0.06127249	0.057734149	0.055355	0.054005
Truck1	0.11512043	0.10243921	0.092723784	0.08534641	0.07985114	0.07590242	0.073259005	0.071749	0.071255
Truck2	0.037648521	0.03282133	0.029083053	0.026191363	0.02397038	0.02229077	0.021059755	0.020211	0.019701
NOx Running Exha	**0.296868257**	**0.237705552**	**0.185235807**	**0.157126971**	**0.13638898**	**0.12048668**	**0.108482231**	**0.10014**	**0.095313**
N2O Running Exha	**0.019918404**	**0.016886315**	**0.013769858**	**0.012096669**	**0.01092927**	**0.01015331**	**0.009720915**	**0.009429**	**0.009275**
CO2 Ex									
Dsl									
NonTruck	21.50630339	18.11583637	14.68885888	12.43710238	10.9936729	9.94253859	9.209077349	8.716891	8.444368
Truck1	609.6112408	529.7498972	448.5301725	388.3443305	337.775786	295.862711	264.2276176	239.6603	222.9362

Truck2	2718.604633	2312.541153	1881.379886	1671.924741	1492.61697	1382.37876	1298.350579	1240.253	1207.877
Gas									
NonTruck	715.7602331	581.0496753	475.1804698	394.9835245	337.606657	299.563865	277.6860567	268.8041	269.749
Truck1	786.9437031	666.933895	565.132278	480.379805	411.633333	357.61791	317.1744891	289.144	272.3675
Truck2	181.746047	147.5378672	120.6542624	100.2903342	85.7216741	76.0628939	70.5090953	68.25538	68.49685
CO2 Running Exhau	**793.1583307**	**648.1290715**	**530.7661312**	**443.9999343**	**381.129336**	**339.013555**	**313.8292334**	**302.335**	**301.4587**

CH4 Ex									
Dsl									
NonTruck	0.000182049	0.000134341	7.3147E-05	3.84578E-05	2.7897E-05	2.2796E-05	1.92405E-05	1.67E-05	1.51E-05
Truck1	0.008383731	0.006902791	0.005759685	0.00484341	0.00409138	0.00346746	0.002950462	0.002528	0.002193
Truck2	0.007514607	0.004871059	0.002487788	0.001379557	0.00101031	0.00081074	0.000661358	0.000561	0.000508
Gas									
NonTruck	0.021166075	0.014311963	0.010131703	0.007506998	0.00582011	0.00472034	0.004004141	0.003552	0.003295
Truck1	0.011770358	0.008387415	0.006201341	0.004737477	0.00372964	0.00302515	0.002535486	0.00221	0.002023
Truck2	0.003334557	0.002244125	0.001581729	0.001167525	0.00090244	0.0007304	0.000618966	0.000549	0.00051
CH4 Running Exhau	**0.021135015**	**0.014346148**	**0.010151479**	**0.007519511**	**0.00583833**	**0.00473943**	**0.004019164**	**0.003561**	**0.003297**

PM2_5 BW									
Dsl									
NonTruck	0.000203525	0.00020867	0.000213489	0.000217072	0.00020642	0.00019978	0.000192868	0.000186	0.000175
Truck1	0.014224377	0.014224377	0.014224377	0.014224377	0.01422438	0.01422438	0.014224377	0.014224	0.014224
Truck2	0.03718473	0.03718473	0.036783206	0.036050602	0.03434067	0.03340799	0.028807297	0.025674	0.02254
Gas									
NonTruck	0.002362054	0.002919263	0.003476446	0.00403329	0.00436589	0.00448226	0.004598224	0.00414	0.003105
Truck1	0.014044657	0.014044657	0.014044657	0.014044657	0.01404466	0.01404466	0.014044657	0.014045	0.014045
Truck2	0.001035541	0.001035541	0.001035487	0.001020879	0.00083929	0.00074849	0.000700716	0.0007	0.0007
PM2.5 BW (grams/	**0.003917109**	**0.004453595**	**0.004982918**	**0.005504863**	**0.00577985**	**0.00586713**	**0.00589214**	**0.005395**	**0.004344**

PM10 BW									
Dsl									
NonTruck	0.0005815	0.000596199	0.000609969	0.000620206	0.00058978	0.00057079	0.00055105	0.000531	0.000499
Truck1	0.040641077	0.040641077	0.040641077	0.040641077	0.04064108	0.04064108	0.040641077	0.040641	0.040641
Truck2	0.106242087	0.106242087	0.105094875	0.10300172	0.0981162	0.09545141	0.082306562	0.073353	0.0644
Gas									
NonTruck	0.006748725	0.008340753	0.009932702	0.011523686	0.01247397	0.01280647	0.013137783	0.011828	0.008873
Truck1	0.040127592	0.040127592	0.040127592	0.040127592	0.04012759	0.04012759	0.040127592	0.040128	0.040128
Truck2	0.002958688	0.002958688	0.002958533	0.002916799	0.00239798	0.00213854	0.002002045	0.002001	0.002
PM10 BW (grams/	**0.011191739**	**0.012724556**	**0.014236907**	**0.015728179**	**0.01651385**	**0.01676323**	**0.016834685**	**0.015414**	**0.012412**

TOG Running Loss Emissions Factor (grams/veh-hour)		**ROG Running Loss Emissions Factor (grams/veh-hour)**	
Gas		Gas	
NonTruck	1.062045747	NonTruck	1.062045747
Truck1	0.069816921	Truck1	0.069816921
Truck2	0.041590162	Truck2	0.041590162
TOG Running Loss	**1.173452831**	**ROG Running**	**1.173452831**
HFC Running Loss	**0.016012165**		
CH4 Running Loss	**0.175260502**		

PM2_5 TW		PM10 TW	
Dsl		Dsl	
NonTruck	4.61623E-05	NonTruck	0.000184649
Truck1	0.001485	Truck1	0.00594
Truck2	0.006601054	Truck2	0.026404216
Gas		Gas	
NonTruck	0.001907037	NonTruck	0.00762815
Truck1	0.00101	Truck1	0.00404
Truck2	0.000144154	Truck2	0.000576617
PM2_5 TW	**0.002050376**	**PM10 TW**	**0.008201504**

File Name:
EMFAC2021/CT-EMFAC2017:
Run Date: 10/21/2021 11:01
Area: Santa Clara (SF)
Analysis Year: 2024
Season: Annual

==========

Vehicle Category	VMT Fraction Across Category	Diesel VMT Within Cat	Gas VMT Within Category
Truck 1	0.029	0.495	0.505
Truck 2	0.017	0.937	0.048
Non-Truck	0.954	0.014	0.955

==========

Road Type:
Silt Loading Factor: CARB 0.32 g/m2
Precipitation Correction: CARB P = 64 days N = 365 days

==========

Fleet Average Running Exhaust Emission Factors (grams/veh-mile)

Pollutant Name	<= 5 mph	10 mph	15 mph	20 mph	25 mph	30 mph	35 mph	40 mph	45 mph	50 mph	55 mph	60 mph	65 mph	70 mph	75 mph
PM2.5	0.010064905	0.006724	0.004658	0.003383	0.002594	0.002091	0.001772	0.001585	0.0015	0	0	0	0	0	0
PM10	0.010860599	0.007244	0.005012	0.003636	0.002785	0.002244	0.0019	0.001698	0.001606	0	0	0	0	0	0
NOx	0.296868257	0.237706	0.185236	0.157127	0.136389	0.120487	0.108482	0.10014	0.095313	0	0	0	0	0	0
CO															
HC															
TOG	0.150963635	0.097999	0.066066	0.046959	0.035418	0.028086	0.023335	0.020317	0.018555	0	0	0	0	0	0
ROG	0.110165562	0.071807	0.048458	0.034482	0.026074	0.020722	0.0019	0.001698	0.001606	0	0	0	0	0	0
1,3-Butadiene															
Acetaldehyde															
Acrolein															
Benzene															
Diesel PM	0.001251732	0.001032	0.000815	0.000657	0.000562	0.000509	0.000485	0.000488	0.000514	0	0	0	0	0	0
Ethylbenzene															
Formaldehyde															
Naphthalene															
POM															
DEOG	0.01394394	0.01005	0.00541	0.002737	0.001898	0.0015	0.001234	0.001057	0.000946	0	0	0	0	0	0
CO2	793.1583307	648.1291	530.7661	443.9999	381.1293	339.0136	313.8292	302.335	301.4587	0	0	0	0	0	0
N2O	0.019918404	0.016886	0.01377	0.012097	0.010929	0.010153	0.009721	0.009429	0.009275	0	0	0	0	0	0
CH4	0.021135015	0.014346	0.010151	0.00752	0.005838	0.004739	0.004019	0.003561	0.003297	0	0	0	0	0	0
BC															

Fleet Average Fuel Consumption (gallons/veh-mile)

Fuel Type	<= 5 mph	10 mph	15 mph	20 mph	25 mph	30 mph	35 mph	40 mph	45 mph	50 mph	55 mph	60 mph	65 mph	70 mph	75 mph
Gasoline	0.074234	0.060034	0.049124	0.040865	0.034934	0.031008	0.028719	0.027786	0.027897	0.028696	0.029898	0.031	0.031925	0.031925	0.031925
Diesel	0.007686	0.006432	0.004914	0.004206	0.003682	0.003262	0.002995	0.002791	0.002666	0.002665	0.002747	0.00288	0.003095	0.003095	0.003095

==========

Fleet Average Running Loss Emission Factors (grams/veh-hour)

Pollutant Name	Emission Factor
HC	
TOG	1.173452831
ROG	1.173452831
1,3-Butadiene	
Benzene	
Ethylbenzene	
Naphthalene	
CH4	0.175260502
HFC	0.016012165

==========

Fleet Average Tire Wear Factors (grams/veh-mile)

Pollutant Name	
PM2.5	0.002050376
PM10	0.008201504

==========

Fleet Average Brake Wear Factors (grams/veh-mile)

Pollutant Name	<= 5 mph	10 mph	15 mph	20 mph	25 mph	30 mph	35 mph	40 mph	45 mph	50 mph	55 mph	60 mph	65 mph	70 mph	75 mph
PM2.5	0.003917109	0.004454	0.004983	0.005505	0.00578	0.005867	0.005892	0.005395	0.004344	0	0	0	0	0	0
PM10	0.011191739	0.012725	0.014237	0.015728	0.016514	0.016763	0.016835	0.015414	0.012412	0	0	0	0	0	0

==========

Fleet Average Road Dust Factors (grams/veh-mile)

Pollutant Name	Emission Factor (Local Urban)
PM2.5	0.120114
PM10	0.800757

==========END==========

Road Link	Description	Direction	No. Lanes	Link Length (miles)	Link Width (ft)	Link Width (m)	Release Height (ft)	Release Height (m)	Initial Vertical Dimention (m)	Initial Vertical Dispersion (m)	Average Speed (mph)	Average Vehicles per Day
DPM_XING	DPM from the new Crossing	Both	2	0.07	34	10.36	11.15	3.4	6.8	3.16	25mph	700
XXX_XING	XXX from The New Crossing	Both	2	0.07	34	10.36	4.27	1.3	2.86	1.33	25mph	700
DPM_W	DPM from the new roadway west of the Crossing	Both	2	0.06	34	10.36	11.15	3.4	6.80	3.16	25mph	350
XXX_W	XXX from the new roadway west of the Crossing	Both	2	0.06	34	10.36	4.27	1.3	2.79	1.30	25mph	350
DPM_E	DPM from the new roadway east of the Crossing	Both	2	0.03	34	10.36	11.15	3.4	6.8	3.16	25mph	350
XXX_E	XXX from the new roadway east of the Crossing	Both	2	0.03	34	10.36	4.27	1.3	2.86	1.33	25mph	350

Emission Factors

	Speed Category	1	2	3
	Travel Speed (mph)	25		
Emisions per vehicle (g/VMT)	DPM	0.000562		
	PM2.5	0.002594		
	TOG Exhaust	0.03352		
	TOG Evap	0.046938		
	Fugitive PM2.5	0.127944		

			Bridge	**W/o Crossing**	**E/o Crossing**	**XXX**	**XXX**	**XXX**
Vehicle Type	Truck 1 (MDT)		20	10	10	0	0	
	Truck 2 (HDT)		12	6	6	0	0	
	Non-Truck		668	334	334	0	0	
Total	2024 ADT	-	700	350	350			
Directional Volume	NB	-						
	SB	-						

	ADT	Distance (mi)	VMT
Bridge	700	0.07	46.1923
W/o Crossing	350	0.06	22.11771
E/o Crossing	350	0.03	10.85
TOTAL		0.16	79.16001
Speed (MPH)	25		

Criteria	Exhaust (grams/day)	Non-Exhaust (grams/day)	Total (g/day)	lbs/day	ton/year
PM2.5	0.21	10.128	10.33	0.022781	0.0042
PM10	0.22	65.34	65.56	0.144546	0.02638
ROG	2.06	3.72	5.78	0.012742	0.002325
NOX	10.80		10.80	0.023802	0.004344
GHG				MT/day	MT/yr
CO2	30170		30170.20108	0.03017	11.01212
N2O	0.865		0.865160868	8.65E-07	0.000316
CH4	0.462	0.5549	1.017106901	1.02E-06	0.000371
HFCs		0.0507	0.050700923	5.07E-08	1.85E-05
CO2e	30440	86.4	30525.9	0.0305	11.14

2024 Hourly Traffic Volumes and DPM Emisssions - DPM from the new Crossing

Hour	Fraction Per Hour	VPH	g/s	Hour	Fraction Per Hour	VPH	g/s	Hour	Fraction Per Hour	VPH	g/s
0	0.01085042	8	0.0000001	8	0.0643577	45	4.6436E-07	16	0.05801478	41	4.18592E-07
1	0.00740349	5	5.34181E-08	9	0.0598818	42	4.32063E-07	17	0.05628001	39	4.06075E-07
2	0.00719554	5	5.19177E-08	10	0.0540699	38	3.90128E-07	18	0.05397567	38	3.89448E-07
3	0.0090397	6	6.52238E-08	11	0.0511832	36	3.693E-07	19	0.04834712	34	3.48837E-07
4	0.01740988	12	1.25617E-07	12	0.0526533	37	3.79907E-07	20	0.03893556	27	2.8093E-07
5	0.03764755	26	2.71637E-07	13	0.0561328	39	4.05013E-07	21	0.03342021	23	2.41135E-07
6	0.05280664	37	3.81014E-07	14	0.061969	43	4.47122E-07	22	0.02602722	18	1.87793E-07
7	0.06314643	44	0.000000456	15	0.0606367	42	4.37509E-07	23	0.0186155	13	1.34316E-07
									TOTAL	700	

2024 Hourly Traffic Volumes and DPM Emisssions - DPM from the new roadway west of the Crossing

Hour	Fraction Per Hour	VPH	g/s	Hour	Fraction Per Hour	VPH	g/s	Hour	Fraction Per Hour	VPH	g/s
0	0.01085042	4	0.00000004	8	0.0643577	23	2.22343E-07	16	0.05801478	20	2.00429E-07
1	0.00740349	3	2.55775E-08	9	0.0598818	21	2.06879E-07	17	0.05628001	20	1.94436E-07
2	0.00719554	3	2.48591E-08	10	0.0540699	19	1.86801E-07	18	0.05397567	19	1.86475E-07
3	0.0090397	3	3.12303E-08	11	0.0511832	18	1.76828E-07	19	0.04834712	17	1.67029E-07
4	0.01740988	6	6.01476E-08	12	0.0526533	18	1.81906E-07	20	0.03893556	14	1.34514E-07
5	0.03764755	13	1.30065E-07	13	0.0561328	20	1.93927E-07	21	0.03342021	12	1.1546E-07
6	0.05280664	18	1.82436E-07	14	0.061969	22	2.1409E-07	22	0.02602722	9	8.99187E-08
7	0.06314643	22	2.18158E-07	15	0.0606367	21	2.09487E-07	23	0.0186155	7	6.43128E-08
									TOTAL	350	

2024 Hourly Traffic Volumes and DPM Emisssions - DPM from the new roadway east of the Crossing

Hour	Fraction Per Hour	VPH	g/s	Hour	Fraction Per Hour	VPH	g/s	Hour	Fraction Per Hour	VPH	g/s
0	0.01085042	4	0.00000002	8	0.0643577	23	1.09072E-07	16	0.05801478	20	9.8322E-08
1	0.00740349	3	1.25472E-08	9	0.0598818	21	1.01486E-07	17	0.05628001	20	9.5382E-08
2	0.00719554	3	1.21948E-08	10	0.0540699	19	9.16363E-08	18	0.05397567	19	9.14766E-08
3	0.0090397	3	1.53203E-08	11	0.0511832	18	8.6744E-08	19	0.04834712	17	8.19375E-08
4	0.01740988	6	2.95058E-08	12	0.0526533	18	8.92355E-08	20	0.03893556	14	6.5987E-08
5	0.03764755	13	6.38041E-08	13	0.0561328	20	9.51324E-08	21	0.03342021	12	5.66397E-08
6	0.05280664	18	8.94954E-08	14	0.061969	22	1.05024E-07	22	0.02602722	9	4.41103E-08
7	0.06314643	22	1.07019E-07	15	0.0606367	21	1.02766E-07	23	0.0186155	7	3.15491E-08
									TOTAL	350	

2024 Hourly Traffic Volumes and Fugitive PM2.5 Emis XXX from The New Crossing

Hour	Fraction Per Hour	VPH	g/s	Hour	Fraction Per Hour	VPH	g/s	Hour	Fraction Per Hour	VPH	g/s
0	0.01085042	8	0.000018	8	0.0643577	45	0.000105655	16	0.05801478	41	9.52415E-05
1	0.00740349	5	1.215E-05	9	0.0598818	42	9.83066E-05	17	0.05628001	39	9.23936E-05
2	0.00719554	5	1.181E-05	10	0.0540699	38	8.87653E-05	18	0.05397567	38	8.86106E-05
3	0.0090397	6	1.484E-05	11	0.0511832	36	8.40263E-05	19	0.04834712	34	7.93704E-05
4	0.01740988	12	2.858E-05	12	0.0526533	37	8.64397E-05	20	0.03893556	27	6.39196E-05
5	0.03764755	26	6.181E-05	13	0.0561328	39	9.21519E-05	21	0.03342021	23	5.48652E-05
6	0.05280664	37	8.669E-05	14	0.061969	43	0.000101733	22	0.02602722	18	4.27283E-05
7	0.06314643	44	0.0001037	15	0.0606367	42	9.95458E-05	23	0.0186155	13	3.05606E-05
									TOTAL	700	

2024 Hourly Traffic Volumes and Fugitive PM2.5 Emis XXX from the new roadway west of the Crossing

Hour	Fraction Per Hour	VPH	g/s	Hour	Fraction Per Hour	VPH	g/s	Hour	Fraction Per Hour	VPH	g/s
0	0.01085042	4	0.000009	8	0.0643577	23	5.05893E-05	16	0.05801478	20	4.56034E-05
1	0.00740349	3	5.82E-06	9	0.0598818	21	4.7071E-05	17	0.05628001	20	4.42397E-05
2	0.00719554	3	5.656E-06	10	0.0540699	19	4.25024E-05	18	0.05397567	19	4.24284E-05
3	0.0090397	3	7.106E-06	11	0.0511832	18	4.02333E-05	19	0.04834712	17	3.8004E-05
4	0.01740988	6	1.369E-05	12	0.0526533	18	4.13889E-05	20	0.03893556	14	3.06059E-05
5	0.03764755	13	2.959E-05	13	0.0561328	20	4.4124E-05	21	0.03342021	12	2.62704E-05
6	0.05280664	18	4.151E-05	14	0.061969	22	4.87116E-05	22	0.02602722	9	2.04591E-05
7	0.06314643	22	4.964E-05	15	0.0606367	21	4.76643E-05	23	0.0186155	7	1.4633E-05
									TOTAL	350	

2024 Hourly Traffic Volumes and Fugitive PM2.5 Emis XXX from the new roadway east of the Crossing

Hour	Fraction Per Hour	VPH	g/s	Hour	Fraction Per Hour	VPH	g/s	Hour	Fraction Per Hour	VPH	g/s
0	0.01085042	4	0.000004	8	0.0643577	23	2.48169E-05	16	0.05801478	20	2.23711E-05
1	0.00740349	3	2.855E-06	9	0.0598818	21	2.3091E-05	17	0.05628001	20	2.17021E-05
2	0.00719554	3	2.775E-06	10	0.0540699	19	2.08499E-05	18	0.05397567	19	2.08135E-05
3	0.0090397	3	3.486E-06	11	0.0511832	18	1.97367E-05	19	0.04834712	17	1.86431E-05
4	0.01740988	6	6.713E-06	12	0.0526533	18	2.03036E-05	20	0.03893556	14	1.50139E-05
5	0.03764755	13	1.452E-05	13	0.0561328	20	2.16453E-05	21	0.03342021	12	1.28872E-05
6	0.05280664	18	2.036E-05	14	0.061969	22	2.38958E-05	22	0.02602722	9	1.00363E-05
7	0.06314643	22	2.435E-05	15	0.0606367	21	2.33821E-05	23	0.0186155	7	7.17832E-06
									TOTAL	350	

2024 Hourly Traffic Volumes and PM2.5 Emisssions - XXX from The New Crossing

Hour	Fraction Per Hour	VPH	g/s	Hour	Fraction Per Hour	VPH	g/s	Hour	Fraction Per Hour	VPH	g/s
0	0.01085042	8	0.0000004	8	0.0643577	45	2.14169E-06	16	0.05801478	41	1.93061E-06
1	0.00740349	5	2.46373E-07	9	0.0598818	42	1.99274E-06	17	0.05628001	39	1.87288E-06
2	0.00719554	5	2.39453E-07	10	0.0540699	38	1.79933E-06	18	0.05397567	38	1.7962E-06
3	0.0090397	6	3.00823E-07	11	0.0511832	36	1.70327E-06	19	0.04834712	34	1.60889E-06
4	0.01740988	12	5.79365E-07	12	0.0526533	37	1.75219E-06	20	0.03893556	27	1.29569E-06
5	0.03764755	26	1.25283E-06	13	0.0561328	39	1.86798E-06	21	0.03342021	23	1.11216E-06
6	0.05280664	37	1.7573E-06	14	0.061969	43	2.0622E-06	22	0.02602722	18	8.66132E-07
7	0.06314643	44	2.10138E-06	15	0.0606367	42	2.01786E-06	23	0.0186155	13	6.19485E-07
									TOTAL	700	

2024 Hourly Traffic Volumes and PM2.5 Emisssions - XXX from the new roadway west of the Crossing

Hour	Fraction Per Hour	VPH	g/s	Hour	Fraction Per Hour	VPH	g/s	Hour	Fraction Per Hour	VPH	g/s
0	0.01085042	4	0.0000002	8	0.0643577	23	1.02548E-06	16	0.05801478	20	9.24412E-07
1	0.00740349	3	1.17968E-07	9	0.0598818	21	9.54161E-07	17	0.05628001	20	8.9677E-07
2	0.00719554	3	1.14654E-07	10	0.0540699	19	8.61554E-07	18	0.05397567	19	8.60052E-07
3	0.0090397	3	1.44039E-07	11	0.0511832	18	8.15557E-07	19	0.04834712	17	7.70367E-07
4	0.01740988	6	2.7741E-07	12	0.0526533	18	8.38981E-07	20	0.03893556	14	6.20402E-07
5	0.03764755	13	5.99879E-07	13	0.0561328	20	8.94424E-07	21	0.03342021	12	5.3252E-07
6	0.05280664	18	8.41425E-07	14	0.061969	22	9.87419E-07	22	0.02602722	9	4.1472E-07
7	0.06314643	22	1.00618E-06	15	0.0606367	21	9.66189E-07	23	0.0186155	7	2.96621E-07
									TOTAL	350	

2024 Hourly Traffic Volumes and PM2.5 Emisssions - XXX from the new roadway east of the Crossing

Hour	Fraction Per Hour	VPH	g/s	Hour	Fraction Per Hour	VPH	g/s	Hour	Fraction Per Hour	VPH	g/s
0	0.01085042	4	0.0000001	8	0.0643577	23	5.03057E-07	16	0.05801478	20	4.53477E-07
1	0.00740349	3	5.78699E-08	9	0.0598818	21	4.6807E-07	17	0.05628001	20	4.39917E-07
2	0.00719554	3	5.62445E-08	10	0.0540699	19	4.22641E-07	18	0.05397567	19	4.21905E-07
3	0.0090397	3	7.06595E-08	11	0.0511832	18	4.00077E-07	19	0.04834712	17	3.77909E-07
4	0.01740988	6	1.36086E-07	12	0.0526533	18	4.11568E-07	20	0.03893556	14	3.04343E-07
5	0.03764755	13	2.94275E-07	13	0.0561328	20	4.38766E-07	21	0.03342021	12	2.61232E-07
6	0.05280664	18	4.12767E-07	14	0.061969	22	4.84385E-07	22	0.02602722	9	2.03444E-07
7	0.06314643	22	4.93589E-07	15	0.0606367	21	4.73971E-07	23	0.0186155	7	1.45509E-07
									TOTAL	350	

2024 Hourly Traffic Volumes and TOG Evaporative Emisssions - XXX from The New Crossing

Hour	Fraction Per Hour	VPH	g/s	Hour	Fraction Per Hour	VPH	g/s	Hour	Fraction Per Hour	VPH	g/s
0	0.01085042	8	0.000007	8	0.0643577	45	3.87608E-05	16	0.05801478	41	3.49407E-05
1	0.00740349	5	4.459E-06	9	0.0598818	42	3.60651E-05	17	0.05628001	39	3.38959E-05
2	0.00719554	5	4.334E-06	10	0.0540699	38	3.25648E-05	18	0.05397567	38	3.2508E-05
3	0.0090397	6	5.444E-06	11	0.0511832	36	3.08262E-05	19	0.04834712	34	2.91181E-05
4	0.01740988	12	1.049E-05	12	0.0526533	37	3.17116E-05	20	0.03893556	27	2.34498E-05
5	0.03764755	26	2.267E-05	13	0.0561328	39	3.38072E-05	21	0.03342021	23	2.01281E-05
6	0.05280664	37	3.18E-05	14	0.061969	43	3.73222E-05	22	0.02602722	18	1.56755E-05
7	0.06314643	44	3.803E-05	15	0.0606367	42	3.65198E-05	23	0.0186155	13	1.12116E-05
									TOTAL	700	

2024 Hourly Traffic Volumes and TOG Evaporative Emisssions - XXX from the new roadway west of the Crossing

Hour	Fraction Per Hour	VPH	g/s	Hour	Fraction Per Hour	VPH	g/s	Hour	Fraction Per Hour	VPH	g/s
0	0.01085042	4	0.000003	8	0.0643577	23	1.85594E-05	16	0.05801478	20	1.67302E-05
1	0.00740349	3	2.135E-06	9	0.0598818	21	1.72686E-05	17	0.05628001	20	1.623E-05
2	0.00719554	3	2.075E-06	10	0.0540699	19	1.55926E-05	18	0.05397567	19	1.55654E-05
3	0.0090397	3	2.607E-06	11	0.0511832	18	1.47601E-05	19	0.04834712	17	1.39423E-05
4	0.01740988	6	5.021E-06	12	0.0526533	18	1.51841E-05	20	0.03893556	14	1.12282E-05
5	0.03764755	13	1.086E-05	13	0.0561328	20	1.61875E-05	21	0.03342021	12	9.63768E-06
6	0.05280664	18	1.523E-05	14	0.061969	22	1.78705E-05	22	0.02602722	9	7.5057E-06
7	0.06314643	22	1.821E-05	15	0.0606367	21	1.74863E-05	23	0.0186155	7	5.36831E-06
									TOTAL	350	

2024 Hourly Traffic Volumes and TOG Evaporative Emisssions - XXX from the new roadway east of the Crossing

Hour	Fraction Per Hour	VPH	g/s	Hour	Fraction Per Hour	VPH	g/s	Hour	Fraction Per Hour	VPH	g/s
0	0.01085042	4	0.000002	8	0.0643577	23	9.10444E-06	16	0.05801478	20	8.20713E-06
1	0.00740349	3	1.047E-06	9	0.0598818	21	8.47125E-06	17	0.05628001	20	7.96172E-06
2	0.00719554	3	1.018E-06	10	0.0540699	19	7.64907E-06	18	0.05397567	19	7.63574E-06
3	0.0090397	3	1.279E-06	11	0.0511832	18	7.2407E-06	19	0.04834712	17	6.83949E-06
4	0.01740988	6	2.463E-06	12	0.0526533	18	7.44866E-06	20	0.03893556	14	5.50807E-06
5	0.03764755	13	5.326E-06	13	0.0561328	20	7.94089E-06	21	0.03342021	12	4.72783E-06
6	0.05280664	18	7.47E-06	14	0.061969	22	8.76652E-06	22	0.02602722	9	3.68197E-06
7	0.06314643	22	8.933E-06	15	0.0606367	21	8.57804E-06	23	0.0186155	7	2.63346E-06
									TOTAL	350	

2024 Hourly Traffic Volumes and TOG Exhaust Emisssi XXX from The New Crossing

Hour	Fraction Per Hour	VPH	g/s	Hour	Fraction Per Hour	VPH	g/s	Hour	Fraction Per Hour	VPH	g/s
0	0.01085042	8	0.000005	8	0.0643577	45	2.76806E-05	16	0.05801478	41	2.49525E-05
1	0.00740349	5	3.184E-06	9	0.0598818	42	2.57555E-05	17	0.05628001	39	2.42063E-05
2	0.00719554	5	3.095E-06	10	0.0540699	38	2.32558E-05	18	0.05397567	38	2.32152E-05
3	0.0090397	6	3.888E-06	11	0.0511832	36	2.20142E-05	19	0.04834712	34	2.07944E-05
4	0.01740988	12	7.488E-06	12	0.0526533	37	2.26465E-05	20	0.03893556	27	1.67464E-05
5	0.03764755	26	1.619E-05	13	0.0561328	39	2.4143E-05	21	0.03342021	23	1.43742E-05
6	0.05280664	37	2.271E-05	14	0.061969	43	2.66532E-05	22	0.02602722	18	1.11945E-05
7	0.06314643	44	2.716E-05	15	0.0606367	42	2.60802E-05	23	0.0186155	13	8.00663E-06
									TOTAL	700	

2024 Hourly Traffic Volumes and TOG Exhaust Emisssi XXX from the new roadway west of the Crossing

Hour	Fraction Per Hour	VPH	g/s	Hour	Fraction Per Hour	VPH	g/s	Hour	Fraction Per Hour	VPH	g/s
0	0.01085042	4	0.000002	8	0.0643577	23	1.3254E-05	16	0.05801478	20	1.19477E-05
1	0.00740349	3	1.525E-06	9	0.0598818	21	1.23322E-05	17	0.05628001	20	1.15904E-05
2	0.00719554	3	1.482E-06	10	0.0540699	19	1.11353E-05	18	0.05397567	19	1.11159E-05
3	0.0090397	3	1.862E-06	11	0.0511832	18	1.05408E-05	19	0.04834712	17	9.95672E-06
4	0.01740988	6	3.585E-06	12	0.0526533	18	1.08435E-05	20	0.03893556	14	8.01848E-06
5	0.03764755	13	7.753E-06	13	0.0561328	20	1.15601E-05	21	0.03342021	12	6.88264E-06
6	0.05280664	18	1.088E-05	14	0.061969	22	1.2762E-05	22	0.02602722	9	5.36011E-06
7	0.06314643	22	1.3E-05	15	0.0606367	21	1.24877E-05	23	0.0186155	7	3.83372E-06
									TOTAL	350	

2024 Hourly Traffic Volumes and TOG Exhaust Emisssi XXX from the new roadway east of the Crossing

Hour	Fraction Per Hour	VPH	g/s	Hour	Fraction Per Hour	VPH	g/s	Hour	Fraction Per Hour	VPH	g/s
0	0.01085042	4	0.000001	8	0.0643577	23	6.50183E-06	16	0.05801478	20	5.86103E-06
1	0.00740349	3	7.479E-07	9	0.0598818	21	6.04965E-06	17	0.05628001	20	5.68577E-06
2	0.00719554	3	7.269E-07	10	0.0540699	19	5.46249E-06	18	0.05397567	19	5.45297E-06
3	0.0090397	3	9.132E-07	11	0.0511832	18	5.17086E-06	19	0.04834712	17	4.88434E-06
4	0.01740988	6	1.759E-06	12	0.0526533	18	5.31938E-06	20	0.03893556	14	3.93352E-06
5	0.03764755	13	3.803E-06	13	0.0561328	20	5.6709E-06	21	0.03342021	12	3.37633E-06
6	0.05280664	18	5.335E-06	14	0.061969	22	6.26051E-06	22	0.02602722	9	2.62944E-06
7	0.06314643	22	6.379E-06	15	0.0606367	21	6.12591E-06	23	0.0186155	7	1.88066E-06
									TOTAL	350	

Attachment 4: Health Risk Calculations for Construction and Operations

Milpitas Blvd. Bridge and Roadway Extension Project

DPM Emissions and Modeling Emission Rates - Without Controls

Construction Year	Activity	Area Source	DPM Emissions (ton/year)	(lb/yr)	(lb/hr)	(g/s)	Number of Sources	DPM Emission Rate ($g/s/m^2$)
2023	Construction	DPM_CONST	0.0454	90.8	0.02865	3.61E-03	169	2.13582E-05
2024	Construction	DPM_CONST	0.0638	127.6	0.0403	0.00508	169.0	3.004E-05
		Construction Hours						
		hr/day =	12	(7am - 7pm)				
		days/yr =	Varies					
		hours/year =	Varies					

DPM Emissions and Modeling Emission Rates - With AQ-1 & AQ-2

Construction Year	Activity	Area Source	DPM Emissions (ton/year)	(lb/yr)	(lb/hr)	(g/s)	Number of Sources	DPM Emission Rate ($g/s/m^2$)
2023	Construction	DPM_CONST	0.0045	9.1	0.00286	3.61E-04	169	2.14E-06
2024	Construction	DPM_CONST	0.0064	12.8	0.0040	0.000508	169.0	3.004E-06
		Construction Hours						
		hr/day =	12	(7am - 7pm)				
		days/yr =	Varies					
		hours/year =	Varies					

Milpitas Blvd. Bridge and Roadway Extension Project

PM2.5 Fugitive Dust Emissions for Modeling - Without Controls

Construction Year	Activity	Area Source	PM2.5 Emissions (ton/year)	(lb/yr)	(lb/hr)	(g/s)	Modeled Area (m^2)	PM2.5 Emission Rate $g/s/m^2$
2023	Construction	PM25_CONST	0.0447	89.4	0.02823	3.56E-03	14663.5	2.43E-07
2024	Construction	PM25_CONST	0.0686	137.3	0.0433	0.005460	14663.5	3.72E-07
		Construction Hours						
		hr/day =	12	(7am - 7pm)				
		days/yr =	Varies					
		hours/year =	Varies					

PM2.5 Fugitive Dust Emissions for Modeling - With AQ-1 & AQ-2

Construction Year	Activity	Area Source	PM2.5 Emissions (ton/year)	(lb/yr)	(lb/hr)	(g/s)	Modeled Area (m^2)	PM2.5 Emission Rate $g/s/m^2$
2023	Construction	PM25_CONST	0.0139	27.8	0.00878	1.11E-03	14663.5	7.55E-08
2024	Construction	PM25_CONST	0.0214	42.7	0.0135	0.001699	14663.5	1.16E-07
		Construction Hours						
		hr/day =	12	(7am - 7pm)				
		days/yr =	Varies					
		hours/year =	Varies					

Milpitas Blvd. Bridge Project , Milpitas - Construction Impacts - Without Mitigation
Maximum DPM Cancer Risk and PM2.5 Calculations From Construction
Impacts at Off-Site Multi-Family Homes - 1.5 meter receptor height

Cancer Risk (per million) = CPF x Inhalation Dose x ASF x ED/AT x FAH x 1.0E6

Where: CPF = Cancer potency factor $(mg/kg\text{-}day)^{-1}$
ASF = Age sensitivity factor for specified age group
ED = Exposure duration (years)
AT = Averaging time for lifetime cancer risk (years)
FAH = Fraction of time spent at home (unitless)

Inhalation Dose = C_{air} x DBR x A x (EF/365) x 10^{-6}

Where: C_{air} = concentration in air ($\mu g/m^3$)
DBR = daily breathing rate (L/kg body weight-day)
A = Inhalation absorption factor
EF = Exposure frequency (days/year)
10^{-6} = Conversion factor

Values

	Infant/Child			Adult
Age -->	**3rd Trimester**	**0 - 2**	**2 - 16**	**16 - 30**
Parameter				
ASF =	10	10	3	1
CPF =	1.10E+00	1.10E+00	1.10E+00	1.10E+00
DBR* =	361	1090	572	261
A =	1	1	1	1
EF =	350	350	350	350
AT =	70	70	70	70
FAH =	1.00	1.00	1.00	0.73

* 95th percentile breathing rates for infants and 80th percentile for children and adults

Construction Cancer Risk by Year - Maximum Impact Receptor Location

		Exposure Information				Infant/Child	Adult			Adult			
							Modeled						
	Exposure		DPM Conc (ug/m3)		Age	Cancer	DPM Conc (ug/m3)		Age	Cancer		Maximum	
Exposure	Duration				Sensitivity	Risk			Sensitivity	Risk			
Year	(years)	Age	Year	Annual	Factor	(per million)	Year	Annual	Factor	(per million)	HI	Fugitive PM2.5	Total PM2.5
0	0.25	-0.25 - 0*	2023	0.0856	10	1.16							
1	1	0 - 1	2023	0.0856	10	14.06	2023	0.0856	1	0.25	0.017	0.4876	0.573
2	1	1 - 2	2024	0.1204	10	19.77	2024	0.1204	1	0.35	0.024	0.7479	0.868
3	1	2 - 3	2025	0.0000	3	0.00	2025	0.0000	1	0.00			
4	1	3 - 4	2026	0.0000	3	0.00	2026	0.0000	1	0.00			
5	1	4 - 5	2027	0.0000	3	0.00	2027	0.0000	1	0.00			
6	1	5 - 6	2028	0.0000	3	0.00	2028	0.0000	1	0.00			
7	1	6 - 7	2029	0.0000	3	0.00	2029	0.0000	1	0.00			
8	1	7 - 8	2030	0.0000	3	0.00	2030	0.0000	1	0.00			
9	1	8 - 9	2031	0.0000	3	0.00	2031	0.0000	1	0.00			
10	1	9 - 10	2032	0.0000	3	0.00	2032	0.0000	1	0.00			
11	1	10 - 11	2033	0.0000	3	0.00	2033	0.0000	1	0.00			
12	1	11 - 12	2034	0.0000	3	0.00	2034	0.0000	1	0.00			
13	1	12 - 13	2035	0.0000	3	0.00	2035	0.0000	1	0.00			
14	1	13 - 14	2036	0.0000	3	0.00	2036	0.0000	1	0.00			
15	1	14 - 15	2037	0.0000	3	0.00	2037	0.0000	1	0.00			
16	1	15 - 16	2038	0.0000	3	0.00	2038	0.0000	1	0.00			
17	1	16-17	2039	0.0000	1	0.00	2039	0.0000	1	0.00			
18	1	17-18	2040	0.0000	1	0.00	2040	0.0000	1	0.00			
19	1	18-19	2041	0.0000	1	0.00	2041	0.0000	1	0.00			
20	1	19-20	2042	0.0000	1	0.00	2042	0.0000	1	0.00			
21	1	20-21	2043	0.0000	1	0.00	2043	0.0000	1	0.00			
22	1	21-22	2044	0.0000	1	0.00	2044	0.0000	1	0.00			
23	1	22-23	2045	0.0000	1	0.00	2045	0.0000	1	0.00			
24	1	23-24	2046	0.0000	1	0.00	2046	0.0000	1	0.00			
25	1	24-25	2047	0.0000	1	0.00	2047	0.0000	1	0.00			
26	1	25-26	2048	0.0000	1	0.00	2048	0.0000	1	0.00			
27	1	26-27	2049	0.0000	1	0.00	2049	0.0000	1	0.00			
28	1	27-28	2050	0.0000	1	0.00	2050	0.0000	1	0.00			
29	1	28-29	2051	0.0000	1	0.00	2051	0.0000	1	0.00			
30	1	29-30	2052	0.0000	1	0.00	2052	0.0000	1	0.00			
Total Increased Cancer Risk						**34.99**				**0.59**			

* Third trimester of pregnancy

Milpitas Blvd. Bridge Project , Milpitas - Construction Impacts - With AQ-1 and AQ-2 Mitigation
Maximum DPM Cancer Risk and PM2.5 Calculations From Construction
Impacts at Off-Site Multi-Family Homes - 1.5 meter receptor height

Cancer Risk (per million) = CPF x Inhalation Dose x ASF x ED/AT x FAH x 1.0E6

Where: CPF = Cancer potency factor $(mg/kg\text{-}day)^{-1}$
ASF = Age sensitivity factor for specified age group
ED = Exposure duration (years)
AT = Averaging time for lifetime cancer risk (years)
FAH = Fraction of time spent at home (unitless)

Inhalation Dose = C_{air} x DBR x A x (EF/365) x 10^{-6}

Where: C_{air} = concentration in air ($\mu g/m^3$)
DBR = daily breathing rate (L/kg body weight-day)
A = Inhalation absorption factor
EF = Exposure frequency (days/year)
10^{-6} = Conversion factor

Values

	Infant/Child			Adult
Age -->	**3rd Trimester**	**0 - 2**	**2 - 16**	**16 - 30**
Parameter				
ASF =	10	10	3	1
CPF =	1.10E+00	1.10E+00	1.10E+00	1.10E+00
DBR* =	361	1090	572	261
A =	1	1	1	1
EF =	350	350	350	350
AT =	70	70	70	70
FAH =	1.00	1.00	1.00	0.73

* 95th percentile breathing rates for infants and 80th percentile for children and adults

Construction Cancer Risk by Year - Maximum Impact Receptor Location

		Exposure Information				Infant/Child	Adult			Adult			
							Modeled						
			DPM Conc (ug/m3)		Age	Cancer	DPM Conc (ug/m3)		Age	Cancer		Maximum	
Exposure	Exposure Duration				Sensitivity	Risk			Sensitivity	Risk			
Year	(years)	Age	Year	Annual	Factor	(per million)	Year	Annual	Factor	(per million)	HI	Fugitive PM2.5	Total PM2.5
0	0.25	-0.25 - 0*	2023	0.0086	10	0.12							
1	1	0 - 1	2023	0.0086	10	1.41	2023	0.0086	1	0.02	0.002	0.1517	0.160
2	1	1 - 2	2024	0.0120	10	1.98	2024	0.0120	1	0.03	0.002	0.2327	0.245
3	1	2 - 3	2025	0.0000	3	0.00	2025	0.0000	1	0.00			
4	1	3 - 4	2026	0.0000	3	0.00	2026	0.0000	1	0.00			
5	1	4 - 5	2027	0.0000	3	0.00	2027	0.0000	1	0.00			
6	1	5 - 6	2028	0.0000	3	0.00	2028	0.0000	1	0.00			
7	1	6 - 7	2029	0.0000	3	0.00	2029	0.0000	1	0.00			
8	1	7 - 8	2030	0.0000	3	0.00	2030	0.0000	1	0.00			
9	1	8 - 9	2031	0.0000	3	0.00	2031	0.0000	1	0.00			
10	1	9 - 10	2032	0.0000	3	0.00	2032	0.0000	1	0.00			
11	1	10 - 11	2033	0.0000	3	0.00	2033	0.0000	1	0.00			
12	1	11 - 12	2034	0.0000	3	0.00	2034	0.0000	1	0.00			
13	1	12 - 13	2035	0.0000	3	0.00	2035	0.0000	1	0.00			
14	1	13 - 14	2036	0.0000	3	0.00	2036	0.0000	1	0.00			
15	1	14 - 15	2037	0.0000	3	0.00	2037	0.0000	1	0.00			
16	1	15 - 16	2038	0.0000	3	0.00	2038	0.0000	1	0.00			
17	1	16-17	2039	0.0000	1	0.00	2039	0.0000	1	0.00			
18	1	17-18	2040	0.0000	1	0.00	2040	0.0000	1	0.00			
19	1	18-19	2041	0.0000	1	0.00	2041	0.0000	1	0.00			
20	1	19-20	2042	0.0000	1	0.00	2042	0.0000	1	0.00			
21	1	20-21	2043	0.0000	1	0.00	2043	0.0000	1	0.00			
22	1	21-22	2044	0.0000	1	0.00	2044	0.0000	1	0.00			
23	1	22-23	2045	0.0000	1	0.00	2045	0.0000	1	0.00			
24	1	23-24	2046	0.0000	1	0.00	2046	0.0000	1	0.00			
25	1	24-25	2047	0.0000	1	0.00	2047	0.0000	1	0.00			
26	1	25-26	2048	0.0000	1	0.00	2048	0.0000	1	0.00			
27	1	26-27	2049	0.0000	1	0.00	2049	0.0000	1	0.00			
28	1	27-28	2050	0.0000	1	0.00	2050	0.0000	1	0.00			
29	1	28-29	2051	0.0000	1	0.00	2051	0.0000	1	0.00			
30	1	29-30	2052	0.0000	1	0.00	2052	0.0000	1	0.00			
Total Increased Cancer Risk						**3.50**				**0.06**			

* Third trimester of pregnancy

Milpitas Blvd. Bridge Project , Milpitas - Construction Impacts - Without Mitigation
Maximum DPM Cancer Risk and PM2.5 Calculations From Construction
Impacts at Off-Site Multi-Family Homes - 4.6 meter receptor height

Cancer Risk (per million) = CPF x Inhalation Dose x ASF x ED/AT x FAH x 1.0E6

Where: CPF = Cancer potency factor $(mg/kg\text{-}day)^{-1}$
ASF = Age sensitivity factor for specified age group
ED = Exposure duration (years)
AT = Averaging time for lifetime cancer risk (years)
FAH = Fraction of time spent at home (unitless)

Inhalation Dose = C_{air} x DBR x A x (EF/365) x 10^{-6}

Where: C_{air} = concentration in air ($\mu g/m^3$)
DBR = daily breathing rate (L/kg body weight-day)
A = Inhalation absorption factor
EF = Exposure frequency (days/year)
10^{-6} = Conversion factor

Values

	Infant/Child			Adult
Age -->	**3rd Trimester**	**0 - 2**	**2 - 16**	**16 - 30**
Parameter				
ASF =	10	10	3	1
CPF =	1.10E+00	1.10E+00	1.10E+00	1.10E+00
DBR* =	361	1090	572	261
A =	1	1	1	1
EF =	350	350	350	350
AT =	70	70	70	70
FAH =	1.00	1.00	1.00	0.73

* 95th percentile breathing rates for infants and 80th percentile for children and adults

Construction Cancer Risk by Year - Maximum Impact Receptor Location

		Exposure Information				Infant/Child	Adult			Adult			
							Modeled						
Exposure Year	**Exposure Duration (years)**	**Age**	**DPM Conc (ug/m3) Year**	**DPM Conc (ug/m3) Annual**	**Age Sensitivity Factor**	**Cancer Risk (per million)**	**DPM Conc (ug/m3) Year**	**DPM Conc (ug/m3) Annual**	**Age Sensitivity Factor**	**Cancer Risk (per million)**	**HI**	**Maximum Fugitive PM2.5**	**Maximum Total PM2.5**
0	0.25	-0.25 - 0*	2023	0.2024	10	2.75							
1	1	0 - 1	2023	0.2024	10	33.25	2023	0.2024	1	0.58	0.040	0.2536	0.456
2	1	1 - 2	2024	0.2847	10	46.76	2024	0.2847	1	0.82	0.057	0.3890	0.674
3	1	2 - 3	2025	0.0000	3	0.00	2025	0.0000	1	0.00			
4	1	3 - 4	2026	0.0000	3	0.00	2026	0.0000	1	0.00			
5	1	4 - 5	2027	0.0000	3	0.00	2027	0.0000	1	0.00			
6	1	5 - 6	2028	0.0000	3	0.00	2028	0.0000	1	0.00			
7	1	6 - 7	2029	0.0000	3	0.00	2029	0.0000	1	0.00			
8	1	7 - 8	2030	0.0000	3	0.00	2030	0.0000	1	0.00			
9	1	8 - 9	2031	0.0000	3	0.00	2031	0.0000	1	0.00			
10	1	9 - 10	2032	0.0000	3	0.00	2032	0.0000	1	0.00			
11	1	10 - 11	2033	0.0000	3	0.00	2033	0.0000	1	0.00			
12	1	11 - 12	2034	0.0000	3	0.00	2034	0.0000	1	0.00			
13	1	12 - 13	2035	0.0000	3	0.00	2035	0.0000	1	0.00			
14	1	13 - 14	2036	0.0000	3	0.00	2036	0.0000	1	0.00			
15	1	14 - 15	2037	0.0000	3	0.00	2037	0.0000	1	0.00			
16	1	15 - 16	2038	0.0000	3	0.00	2038	0.0000	1	0.00			
17	1	16-17	2039	0.0000	1	0.00	2039	0.0000	1	0.00			
18	1	17-18	2040	0.0000	1	0.00	2040	0.0000	1	0.00			
19	1	18-19	2041	0.0000	1	0.00	2041	0.0000	1	0.00			
20	1	19-20	2042	0.0000	1	0.00	2042	0.0000	1	0.00			
21	1	20-21	2043	0.0000	1	0.00	2043	0.0000	1	0.00			
22	1	21-22	2044	0.0000	1	0.00	2044	0.0000	1	0.00			
23	1	22-23	2045	0.0000	1	0.00	2045	0.0000	1	0.00			
24	1	23-24	2046	0.0000	1	0.00	2046	0.0000	1	0.00			
25	1	24-25	2047	0.0000	1	0.00	2047	0.0000	1	0.00			
26	1	25-26	2048	0.0000	1	0.00	2048	0.0000	1	0.00			
27	1	26-27	2049	0.0000	1	0.00	2049	0.0000	1	0.00			
28	1	27-28	2050	0.0000	1	0.00	2050	0.0000	1	0.00			
29	1	28-29	2051	0.0000	1	0.00	2051	0.0000	1	0.00			
30	1	29-30	2052	0.0000	1	0.00	2052	0.0000	1	0.00			
Total Increased Cancer Risk						**82.77**				**1.40**			

* Third trimester of pregnancy

Milpitas Blvd. Bridge Project , Milpitas - Construction Impacts - With AQ-1 and AQ-2 Mitigation
Maximum DPM Cancer Risk and PM2.5 Calculations From Construction
Impacts at Off-Site Multi-Family Homes - 4.6 meter receptor height

Cancer Risk (per million) = CPF x Inhalation Dose x ASF x ED/AT x FAH x 1.0E6

Where: CPF = Cancer potency factor $(mg/kg\text{-}day)^{-1}$
ASF = Age sensitivity factor for specified age group
ED = Exposure duration (years)
AT = Averaging time for lifetime cancer risk (years)
FAH = Fraction of time spent at home (unitless)

Inhalation Dose = C_{air} x DBR x A x (EF/365) x 10^{-6}

Where: C_{air} = concentration in air ($\mu g/m^3$)
DBR = daily breathing rate (L/kg body weight-day)
A = Inhalation absorption factor
EF = Exposure frequency (days/year)
10^{-6} = Conversion factor

Values

	Infant/Child			Adult
Age -->	**3rd Trimester**	**0 - 2**	**2 - 16**	**16 - 30**
Parameter				
ASF =	10	10	3	1
CPF =	1.10E+00	1.10E+00	1.10E+00	1.10E+00
DBR* =	361	1090	572	261
A =	1	1	1	1
EF =	350	350	350	350
AT =	70	70	70	70
FAH =	1.00	1.00	1.00	0.73

* 95th percentile breathing rates for infants and 80th percentile for children and adults

Construction Cancer Risk by Year - Maximum Impact Receptor Location

Exposure Year	Exposure Duration (years)	Exposure Information Age	DPM Conc (ug/m3) Year	DPM Conc (ug/m3) Annual	Age Sensitivity Factor	Infant/Child Cancer Risk (per million)	Adult Modeled DPM Conc (ug/m3) Year	Adult Modeled DPM Conc (ug/m3) Annual	Adult Age Sensitivity Factor	Adult Cancer Risk (per million)	HI	Maximum Fugitive PM2.5	Maximum Total PM2.5
0	0.25	-0.25 - 0*	2023	0.0202	10	0.28							
1	1	0 - 1	2023	0.0202	10	3.32	2023	0.0202	1	0.06	0.004	0.0789	0.099
2	1	1 - 2	2024	0.0285	10	4.68	2024	0.0285	1	0.08	0.006	0.1210	0.149
3	1	2 - 3	2025	0.0000	3	0.00	2025	0.0000	1	0.00			
4	1	3 - 4	2026	0.0000	3	0.00	2026	0.0000	1	0.00			
5	1	4 - 5	2027	0.0000	3	0.00	2027	0.0000	1	0.00			
6	1	5 - 6	2028	0.0000	3	0.00	2028	0.0000	1	0.00			
7	1	6 - 7	2029	0.0000	3	0.00	2029	0.0000	1	0.00			
8	1	7 - 8	2030	0.0000	3	0.00	2030	0.0000	1	0.00			
9	1	8 - 9	2031	0.0000	3	0.00	2031	0.0000	1	0.00			
10	1	9 - 10	2032	0.0000	3	0.00	2032	0.0000	1	0.00			
11	1	10 - 11	2033	0.0000	3	0.00	2033	0.0000	1	0.00			
12	1	11 - 12	2034	0.0000	3	0.00	2034	0.0000	1	0.00			
13	1	12 - 13	2035	0.0000	3	0.00	2035	0.0000	1	0.00			
14	1	13 - 14	2036	0.0000	3	0.00	2036	0.0000	1	0.00			
15	1	14 - 15	2037	0.0000	3	0.00	2037	0.0000	1	0.00			
16	1	15 - 16	2038	0.0000	3	0.00	2038	0.0000	1	0.00			
17	1	16-17	2039	0.0000	1	0.00	2039	0.0000	1	0.00			
18	1	17-18	2040	0.0000	1	0.00	2040	0.0000	1	0.00			
19	1	18-19	2041	0.0000	1	0.00	2041	0.0000	1	0.00			
20	1	19-20	2042	0.0000	1	0.00	2042	0.0000	1	0.00			
21	1	20-21	2043	0.0000	1	0.00	2043	0.0000	1	0.00			
22	1	21-22	2044	0.0000	1	0.00	2044	0.0000	1	0.00			
23	1	22-23	2045	0.0000	1	0.00	2045	0.0000	1	0.00			
24	1	23-24	2046	0.0000	1	0.00	2046	0.0000	1	0.00			
25	1	24-25	2047	0.0000	1	0.00	2047	0.0000	1	0.00			
26	1	25-26	2048	0.0000	1	0.00	2048	0.0000	1	0.00			
27	1	26-27	2049	0.0000	1	0.00	2049	0.0000	1	0.00			
28	1	27-28	2050	0.0000	1	0.00	2050	0.0000	1	0.00			
29	1	28-29	2051	0.0000	1	0.00	2051	0.0000	1	0.00			
30	1	29-30	2052	0.0000	1	0.00	2052	0.0000	1	0.00			
Total Increased Cancer Risk						**8.28**				**0.14**			

* Third trimester of pregnancy

Milpitas Blvd. Bridge Project , Milpitas - Construction Impacts - Without Mitigation
Maximum DPM Cancer Risk and PM2.5 Calculations From Construction
Impacts at Off-Site Multi-Family Homes - 7.6 meter receptor height

Cancer Risk (per million) = CPF x Inhalation Dose x ASF x ED/AT x FAH x 1.0E6

Where: CPF = Cancer potency factor $(mg/kg\text{-}day)^{-1}$
ASF = Age sensitivity factor for specified age group
ED = Exposure duration (years)
AT = Averaging time for lifetime cancer risk (years)
FAH = Fraction of time spent at home (unitless)

Inhalation Dose = C_{air} x DBR x A x (EF/365) x 10^{-6}

Where: C_{air} = concentration in air ($\mu g/m^3$)
DBR = daily breathing rate (L/kg body weight-day)
A = Inhalation absorption factor
EF = Exposure frequency (days/year)
10^{-6} = Conversion factor

Values

	Infant/Child			Adult
Age -->	**3rd Trimester**	**0 - 2**	**2 - 16**	**16 - 30**
Parameter				
ASF =	10	10	3	1
CPF =	1.10E+00	1.10E+00	1.10E+00	1.10E+00
DBR* =	361	1090	572	261
A =	1	1	1	1
EF =	350	350	350	350
AT =	70	70	70	70
FAH =	1.00	1.00	1.00	0.73

* 95th percentile breathing rates for infants and 80th percentile for children and adults

Construction Cancer Risk by Year - Maximum Impact Receptor Location

Exposure Year	Exposure Duration (years)	Exposure Information: Age	DPM Conc (ug/m3): Year	DPM Conc (ug/m3): Annual	Age Sensitivity Factor	Infant/Child Cancer Risk (per million)	Adult: Modeled DPM Conc (ug/m3): Year	Adult: Modeled DPM Conc (ug/m3): Annual	Adult: Age Sensitivity Factor	Adult Cancer Risk (per million)	HI	Maximum Fugitive PM2.5	Maximum Total PM2.5
0	0.25	-0.25 - 0*	2023	0.1717	10	2.34							
1	1	0 - 1	2023	0.1717	10	28.21	2023	0.1717	1	0.49	0.034	0.1274	0.299
2	1	1 - 2	2024	0.2416	10	39.67	2024	0.2416	1	0.69	0.048	0.1954	0.437
3	1	2 - 3	2025	0.0000	3	0.00	2025	0.0000	1	0.00			
4	1	3 - 4	2026	0.0000	3	0.00	2026	0.0000	1	0.00			
5	1	4 - 5	2027	0.0000	3	0.00	2027	0.0000	1	0.00			
6	1	5 - 6	2028	0.0000	3	0.00	2028	0.0000	1	0.00			
7	1	6 - 7	2029	0.0000	3	0.00	2029	0.0000	1	0.00			
8	1	7 - 8	2030	0.0000	3	0.00	2030	0.0000	1	0.00			
9	1	8 - 9	2031	0.0000	3	0.00	2031	0.0000	1	0.00			
10	1	9 - 10	2032	0.0000	3	0.00	2032	0.0000	1	0.00			
11	1	10 - 11	2033	0.0000	3	0.00	2033	0.0000	1	0.00			
12	1	11 - 12	2034	0.0000	3	0.00	2034	0.0000	1	0.00			
13	1	12 - 13	2035	0.0000	3	0.00	2035	0.0000	1	0.00			
14	1	13 - 14	2036	0.0000	3	0.00	2036	0.0000	1	0.00			
15	1	14 - 15	2037	0.0000	3	0.00	2037	0.0000	1	0.00			
16	1	15 - 16	2038	0.0000	3	0.00	2038	0.0000	1	0.00			
17	1	16-17	2039	0.0000	1	0.00	2039	0.0000	1	0.00			
18	1	17-18	2040	0.0000	1	0.00	2040	0.0000	1	0.00			
19	1	18-19	2041	0.0000	1	0.00	2041	0.0000	1	0.00			
20	1	19-20	2042	0.0000	1	0.00	2042	0.0000	1	0.00			
21	1	20-21	2043	0.0000	1	0.00	2043	0.0000	1	0.00			
22	1	21-22	2044	0.0000	1	0.00	2044	0.0000	1	0.00			
23	1	22-23	2045	0.0000	1	0.00	2045	0.0000	1	0.00			
24	1	23-24	2046	0.0000	1	0.00	2046	0.0000	1	0.00			
25	1	24-25	2047	0.0000	1	0.00	2047	0.0000	1	0.00			
26	1	25-26	2048	0.0000	1	0.00	2048	0.0000	1	0.00			
27	1	26-27	2049	0.0000	1	0.00	2049	0.0000	1	0.00			
28	1	27-28	2050	0.0000	1	0.00	2050	0.0000	1	0.00			
29	1	28-29	2051	0.0000	1	0.00	2051	0.0000	1	0.00			
30	1	29-30	2052	0.0000	1	0.00	2052	0.0000	1	0.00			
Total Increased Cancer Risk						**70.22**				**1.19**			

* Third trimester of pregnancy

Milpitas Blvd. Bridge Project , Milpitas - Construction Impacts - With AQ-1 and AQ-2 Mitigation
Maximum DPM Cancer Risk and PM2.5 Calculations From Construction
Impacts at Off-Site Multi-Family Homes - 7.6 meter receptor height

Cancer Risk (per million) = CPF x Inhalation Dose x ASF x ED/AT x FAH x 1.0E6

Where: CPF = Cancer potency factor $(mg/kg\text{-}day)^{-1}$
ASF = Age sensitivity factor for specified age group
ED = Exposure duration (years)
AT = Averaging time for lifetime cancer risk (years)
FAH = Fraction of time spent at home (unitless)

Inhalation Dose = C_{air} x DBR x A x (EF/365) x 10^{-6}

Where: C_{air} = concentration in air ($\mu g/m^3$)
DBR = daily breathing rate (L/kg body weight-day)
A = Inhalation absorption factor
EF = Exposure frequency (days/year)
10^{-6} = Conversion factor

Values

	Infant/Child			Adult
Age -->	**3rd Trimester**	**0 - 2**	**2 - 16**	**16 - 30**
Parameter				
ASF =	10	10	3	1
CPF =	1.10E+00	1.10E+00	1.10E+00	1.10E+00
DBR* =	361	1090	572	261
A =	1	1	1	1
EF =	350	350	350	350
AT =	70	70	70	70
FAH =	1.00	1.00	1.00	0.73

* 95th percentile breathing rates for infants and 80th percentile for children and adults

Construction Cancer Risk by Year - Maximum Impact Receptor Location

Exposure Year	Exposure Duration (years)	Exposure Information Age	DPM Conc (ug/m3) Year	DPM Conc (ug/m3) Annual	Age Sensitivity Factor	Infant/Child Cancer Risk (per million)	Adult Modeled DPM Conc (ug/m3) Year	Adult Modeled DPM Conc (ug/m3) Annual	Adult Age Sensitivity Factor	Adult Cancer Risk (per million)	HI	Maximum Fugitive PM2.5	Maximum Total PM2.5
0	0.25	-0.25 - 0*	2023	0.0172	10	0.23							
1	1	0 - 1	2023	0.0172	10	2.82	2023	0.0172	1	0.05	0.003	0.0396	0.057
2	1	1 - 2	2024	0.0242	10	3.97	2024	0.0242	1	0.07	0.005	0.0608	0.085
3	1	2 - 3	2025	0.0000	3	0.00	2025	0.0000	1	0.00			
4	1	3 - 4	2026	0.0000	3	0.00	2026	0.0000	1	0.00			
5	1	4 - 5	2027	0.0000	3	0.00	2027	0.0000	1	0.00			
6	1	5 - 6	2028	0.0000	3	0.00	2028	0.0000	1	0.00			
7	1	6 - 7	2029	0.0000	3	0.00	2029	0.0000	1	0.00			
8	1	7 - 8	2030	0.0000	3	0.00	2030	0.0000	1	0.00			
9	1	8 - 9	2031	0.0000	3	0.00	2031	0.0000	1	0.00			
10	1	9 - 10	2032	0.0000	3	0.00	2032	0.0000	1	0.00			
11	1	10 - 11	2033	0.0000	3	0.00	2033	0.0000	1	0.00			
12	1	11 - 12	2034	0.0000	3	0.00	2034	0.0000	1	0.00			
13	1	12 - 13	2035	0.0000	3	0.00	2035	0.0000	1	0.00			
14	1	13 - 14	2036	0.0000	3	0.00	2036	0.0000	1	0.00			
15	1	14 - 15	2037	0.0000	3	0.00	2037	0.0000	1	0.00			
16	1	15 - 16	2038	0.0000	3	0.00	2038	0.0000	1	0.00			
17	1	16-17	2039	0.0000	1	0.00	2039	0.0000	1	0.00			
18	1	17-18	2040	0.0000	1	0.00	2040	0.0000	1	0.00			
19	1	18-19	2041	0.0000	1	0.00	2041	0.0000	1	0.00			
20	1	19-20	2042	0.0000	1	0.00	2042	0.0000	1	0.00			
21	1	20-21	2043	0.0000	1	0.00	2043	0.0000	1	0.00			
22	1	21-22	2044	0.0000	1	0.00	2044	0.0000	1	0.00			
23	1	22-23	2045	0.0000	1	0.00	2045	0.0000	1	0.00			
24	1	23-24	2046	0.0000	1	0.00	2046	0.0000	1	0.00			
25	1	24-25	2047	0.0000	1	0.00	2047	0.0000	1	0.00			
26	1	25-26	2048	0.0000	1	0.00	2048	0.0000	1	0.00			
27	1	26-27	2049	0.0000	1	0.00	2049	0.0000	1	0.00			
28	1	27-28	2050	0.0000	1	0.00	2050	0.0000	1	0.00			
29	1	28-29	2051	0.0000	1	0.00	2051	0.0000	1	0.00			
30	1	29-30	2052	0.0000	1	0.00	2052	0.0000	1	0.00			
Total Increased Cancer Risk						**7.02**				**0.12**			

* Third trimester of pregnancy

Milpitas Blvd. Bridge Project , Milpitas - Operations Impacts
DPM Cancer Risk and PM2.5 Calculations at MEI
Impacts at Off-Site Multi-Family Homes - 1.5 meter receptor height

Cancer Risk (per million) = CPF x Inhalation Dose x ASF x ED/AT x FAH x 1.0E6

Where: CPF = Cancer potency factor $(mg/kg\text{-}day)^{1}$
ASF = Age sensitivity factor for specified age group
ED = Exposure duration (years)
AT = Averaging time for lifetime cancer risk (years)
FAH = Fraction of time spent at home (unitless)

Inhalation Dose = C_{air} x DBR x A x (EF/365) x 10^{-6}

Where: C_{air} = concentration in air ($\mu g/m^3$)
DBR = daily breathing rate (L/kg body weight-day)
A = Inhalation absorption factor
EF = Exposure frequency (days/year)
10^{-6} = Conversion factor

Values

	Infant/Child			Adult
Age --> Parameter	**3rd Trimester**	**0 - 2**	**2 - 16**	**16 - 30**
ASF =	10	10	3	1
DPM CPF =	1.10E+00	1.10E+00	1.10E+00	1.10E+00
TOG Exhaust CPF =	6.28E-03	6.28E-03	6.28E-03	6.28E-03
TOG Evaporative CPF =	3.70E-04	3.70E-04	3.70E-04	3.70E-04
DBR* =	361	1090	572	261
A =	1	1	1	1
EF =	350	350	350	350
AT =	70	70	70	70
FAH =	1.00	1.00	1.00	0.73

* 95th percentile breathing rates for infants and 80th percentile for children and adults

Project Cancer Risk by Year - Maximum Impact Receptor Location

Infant/Child Exposure Information					TAC Concentrations (ug/m3)			DPM	Exhaust TOG	Evaporative TOG	TOTAL	Adult Exposure Only										
Exposure Year	**Exposure Duration (years)**	**Age**	**Year**	**Age Sensitivity Factor**	**DPM**	**Exhaust TOG**	**Evaporative TOG**	**Cancer Risk (per million)**	**Cancer Risk (per million)**	**Cancer Risk (per million)**	**Cancer Risk (per million)**	**Exposure Year**	**Age Sensitivity Factor**	**DPM Cancer Risk (per million)**	**Exhaust TOG Cancer Risk (per million)**	**Evaporative TOG Cancer Risk (per million)**	**TOTAL Cancer Risk (per million)**	**HI**	**Maximum Fugitive PM2.5**	**Maximum Exhaust PM2.5**	**Total PM2.5**
0	0.25	-0.25 - 0*	2024	10	0.0001	0.0039	0.0054	0.001	0.0003	0.0000	0.0010	0									
1	1	0 - 1	2024	10	0.0001	0.0039	0.0054	0.01	0.0036	0.0003	0.0121	1	1	0.00014	0.00006	0.00001	0.00021	0.000	0.0147	0.0003	0.02
2	1	1 - 2	2025	10	0.0001	0.0039	0.0054	0.01	0.0036	0.0003	0.0121	2	1	0.00014	0.00006	0.00001	0.00021	0.000	0.0147	0.0003	0.02
3	1	2 - 3	2026	3	0.0001	0.0039	0.0054	0.001	0.001	0.00005	0.002	3	1	0.0001	0.0001	0.00001	0.0002	0.00001	0.015	0.0003	0.02
4	1	3 - 4	2027	3	0.0001	0.0039	0.0054	0.001	0.001	0.00005	0.002	4	1	0.0001	0.0001	0.00001	0.0002	0.00001	0.015	0.0003	0.02
5	1	4 - 5	2028	3	0.0001	0.0039	0.0054	0.001	0.001	0.00005	0.002	5	1	0.0001	0.0001	0.00001	0.0002	0.00001	0.015	0.000	0.02
6	1	5 - 6	2029	3	0.0001	0.0039	0.0054	0.001	0.001	0.00005	0.002	6	1	0.0001	0.0001	0.00001	0.0002	0.00001	0.015	0.000	0.02
7	1	6 - 7	2030	3	0.0001	0.0039	0.0054	0.001	0.001	0.00005	0.002	7	1	0.0001	0.0001	0.00001	0.0002	0.00001	0.015	0.000	0.02
8	1	7 - 8	2031	3	0.0001	0.0039	0.0054	0.001	0.001	0.00005	0.002	8	1	0.0001	0.0001	0.00001	0.0002	0.00001	0.015	0.000	0.02
9	1	8 - 9	2032	3	0.0001	0.0039	0.0054	0.001	0.001	0.00005	0.002	9	1	0.0001	0.0001	0.00001	0.0002	0.00001	0.015	0.000	0.02
10	1	9 - 10	2033	3	0.0001	0.0039	0.0054	0.001	0.001	0.00005	0.002	10	1	0.0001	0.0001	0.00001	0.0002	0.00001	0.015	0.000	0.02
11	1	10 - 11	2034	3	0.0001	0.0039	0.0054	0.001	0.001	0.00005	0.002	11	1	0.0001	0.0001	0.00001	0.0002	0.00001	0.015	0.000	0.02
12	1	11 - 12	2035	3	0.0001	0.0039	0.0054	0.001	0.001	0.00005	0.002	12	1	0.0001	0.0001	0.00001	0.0002	0.00001	0.015	0.000	0.02
13	1	12 - 13	2036	3	0.0001	0.0039	0.0054	0.001	0.001	0.00005	0.002	13	1	0.0001	0.0001	0.00001	0.0002	0.00001	0.015	0.000	0.02
14	1	13 - 14	2037	3	0.0001	0.0039	0.0054	0.001	0.001	0.00005	0.002	14	1	0.0001	0.0001	0.00001	0.0002	0.00001	0.015	0.000	0.02
15	1	14 - 15	2038	3	0.0001	0.0039	0.0054	0.001	0.001	0.00005	0.002	15	1	0.0001	0.0001	0.00001	0.0002	0.00001	0.015	0.000	0.02
16	1	15 - 16	2039	3	0.0001	0.0039	0.0054	0.001	0.001	0.00005	0.002	16	1	0.0001	0.0001	0.00001	0.0002	0.00001	0.015	0.000	0.02
17	1	16-17	2040	1	0.0001	0.0039	0.0054	0.0001	0.0001	0.00001	0.0002	17	1	0.0001	0.0001	0.00001	0.0002	0.00001	0.015	0.000	0.02
18	1	17-18	2041	1	0.0001	0.0039	0.0054	0.0001	0.0001	0.00001	0.0002	18	1	0.0001	0.0001	0.00001	0.0002	0.00001	0.015	0.000	0.02
19	1	18-19	2042	1	0.0001	0.0039	0.0054	0.0001	0.0001	0.00001	0.0002	19	1	0.0001	0.0001	0.00001	0.0002	0.00001	0.015	0.000	0.02
20	1	19-20	2043	1	0.0001	0.0039	0.0054	0.0001	0.0001	0.00001	0.0002	20	1	0.0001	0.0001	0.00001	0.0002	0.00001	0.015	0.000	0.02
21	1	20-21	2044	1	0.0001	0.0039	0.0054	0.0001	0.0001	0.00001	0.0002	21	1	0.0001	0.0001	0.00001	0.0002	0.00001	0.015	0.000	0.02
22	1	21-22	2045	1	0.0001	0.0039	0.0054	0.0001	0.0001	0.00001	0.0002	22	1	0.0001	0.0001	0.00001	0.0002	0.00001	0.015	0.000	0.02
23	1	22-23	2046	1	0.0001	0.0039	0.0054	0.0001	0.0001	0.00001	0.0002	23	1	0.0001	0.0001	0.00001	0.0002	0.00001	0.015	0.000	0.02
24	1	23-24	2047	1	0.0001	0.0039	0.0054	0.0001	0.0001	0.00001	0.0002	24	1	0.0001	0.0001	0.00001	0.0002	0.00001	0.015	0.000	0.02
25	1	24-25	2048	1	0.0001	0.0039	0.0054	0.0001	0.0001	0.00001	0.0002	25	1	0.0001	0.0001	0.00001	0.0002	0.00001	0.015	0.000	0.02
26	1	25-26	2049	1	0.0001	0.0039	0.0054	0.0001	0.0001	0.00001	0.0002	26	1	0.0001	0.0001	0.00001	0.0002	0.00001	0.015	0.000	0.02
27	1	26-27	2050	1	0.0001	0.0039	0.0054	0.0001	0.0001	0.00001	0.0002	27	1	0.0001	0.0001	0.00001	0.0002	0.00001	0.015	0.000	0.02
28	1	27-28	2051	1	0.0001	0.0039	0.0054	0.0001	0.0001	0.00001	0.0002	28	1	0.0001	0.0001	0.00001	0.0002	0.00001	0.015	0.000	0.02
29	1	28-29	2052	1	0.0001	0.0039	0.0054	0.0001	0.0001	0.00001	0.0002	29	1	0.0001	0.0001	0.00001	0.0002	0.00001	0.015	0.000	0.02
30	1	29-30	2053	1	0.0001	0.0039	0.0054	0.0001	0.0001	0.00001	0.0002	30	1	0.0001	0.0001	0.00001	0.0002	0.00001	0.015	0.000	0.02
							Total Increased Cancer Risk	**0.04**	**0.02**	**0.001**	**0.055**	**Total Increased Adult Risk**		**0.00**	**0.0**	**0.0**	**0.01**				

* Third trimester of pregnancy

Milpitas Blvd. Bridge Project, Milpitas - Operations Impacts
DPM Cancer Risk and PM2.5 Calculations
Impacts at Off-Site Multi-Family Homes - 4.6 meter receptor height

Cancer Risk (per million) = CPF x Inhalation Dose x ASF x ED/AT x FAH x 1.0E6

Where: CPF = Cancer potency factor $(mg/kg\text{-}day)^{-1}$
ASF = Age sensitivity factor for specified age group
ED = Exposure duration (years)
AT = Averaging time for lifetime cancer risk (years)
FAH = Fraction of time spent at home (unitless)

Inhalation Dose = C_{air} x DBR x A x (EF/365) x 10^{-6}

Where: C_{air} = concentration in air ($\mu g/m^3$)
DBR = daily breathing rate (L/kg body weight-day)
A = Inhalation absorption factor
EF = Exposure frequency (days/year)
10^{-6} = Conversion factor

Values

	Infant/Child			Adult
Age --> **Parameter**	**3rd Trimester**	**0 - 2**	**2 - 16**	**16 - 30**
ASF =	10	10	3	1
DPM CPF =	1.10E+00	1.10E+00	1.10E+00	1.10E+00
TOG Exhaust CPF =	6.28E-03	6.28E-03	6.28E-03	6.28E-03
TOG Evaporative CPF =	3.70E-04	3.70E-04	3.70E-04	3.70E-04
DBR* =	361	1090	572	261
A =	1	1	1	1
EF =	350	350	350	350
AT =	70	70	70	70
FAH =	1.00	1.00	1.00	0.73

* 95th percentile breathing rates for infants and 80th percentile for children and adults

Project Cancer Risk by Year - Maximum Impact Receptor Location

Infant/Child Exposure Information					TAC Concentrations (ug/m3)			DPM	Exhaust TOG	Evaporative TOG	TOTAL	Adult Exposure Only									
Exposure Year	**Exposure Duration (years)**	**Age**	**Year**	**Age Sensitivity Factor**	**DPM**	**Exhaust TOG**	**Evaporative TOG**	**Cancer Risk (per million)**	**Cancer Risk (per million)**	**Cancer Risk (per million)**	**Cancer Risk (per million)**	**Exposure Year**	**Age Sensitivity Factor**	**DPM Cancer Risk (per million)**	**Exhaust TOG Cancer Risk (per million)**	**Evaporative TOG Cancer Risk (per million)**	**TOTAL Cancer Risk (per million)**	**HI**	**Maximum Fugitive PM2.5**	**Maximum Exhaust PM2.5**	**Total PM2.5**
0	0.25	-0.25 - 0*	2024	10	0.0000	0.00315	0.00442	0.001	0.0002	0.00002	0.001	0									
1	1	0 - 1	2024	10	0.00004	0.00315	0.00442	0.007	0.003	0.0002	0.010	1	1	0.0001	0.000052	0.000004	0.000171	0.00001	0.0120	0.0002	0.01
2	1	1 - 2	2025	10	0.00004	0.00315	0.00442	0.007	0.003	0.0002	0.010	2	1	0.0001	0.000052	0.000004	0.000171	0.00001	0.0120	0.0002	0.01
3	1	2 - 3	2026	3	0.00004	0.0032	0.0044	0.001	0.000	0.00004	0.002	3	1	0.0001	0.0001	0.000004	0.0002	0.000008	0.012	0.0002	0.01
4	1	3 - 4	2027	3	0.00004	0.0032	0.0044	0.001	0.000	0.00004	0.002	4	1	0.0001	0.0001	0.000004	0.0002	0.000008	0.012	0.0002	0.01
5	1	4 - 5	2028	3	0.00004	0.0032	0.0044	0.001	0.000	0.00004	0.002	5	1	0.0001	0.0001	0.000004	0.0002	0.000008	0.012	0.000	0.01
6	1	5 - 6	2029	3	0.00004	0.0032	0.0044	0.001	0.000	0.00004	0.002	6	1	0.0001	0.0001	0.000004	0.0002	0.000008	0.012	0.000	0.01
7	1	6 - 7	2030	3	0.00004	0.0032	0.0044	0.001	0.000	0.00004	0.002	7	1	0.0001	0.0001	0.000004	0.0002	0.000008	0.012	0.000	0.01
8	1	7 - 8	2031	3	0.00004	0.0032	0.0044	0.001	0.000	0.00004	0.002	8	1	0.0001	0.0001	0.000004	0.0002	0.000008	0.012	0.000	0.01
9	1	8 - 9	2032	3	0.00004	0.0032	0.0044	0.001	0.000	0.00004	0.002	9	1	0.0001	0.0001	0.000004	0.0002	0.000008	0.012	0.000	0.01
10	1	9 - 10	2033	3	0.00004	0.0032	0.0044	0.001	0.000	0.00004	0.002	10	1	0.0001	0.0001	0.000004	0.0002	0.000008	0.012	0.000	0.01
11	1	10 - 11	2034	3	0.00004	0.0032	0.0044	0.001	0.000	0.00004	0.002	11	1	0.0001	0.0001	0.000004	0.0002	0.000008	0.012	0.000	0.01
12	1	11 - 12	2035	3	0.00004	0.0032	0.0044	0.001	0.000	0.00004	0.002	12	1	0.0001	0.0001	0.000004	0.0002	0.000008	0.012	0.000	0.01
13	1	12 - 13	2036	3	0.00004	0.0032	0.0044	0.001	0.000	0.00004	0.002	13	1	0.0001	0.0001	0.000004	0.0002	0.000008	0.012	0.000	0.01
14	1	13 - 14	2037	3	0.00004	0.0032	0.0044	0.001	0.000	0.00004	0.002	14	1	0.0001	0.0001	0.000004	0.0002	0.000008	0.012	0.000	0.01
15	1	14 - 15	2038	3	0.00004	0.0032	0.0044	0.001	0.000	0.00004	0.002	15	1	0.0001	0.0001	0.000004	0.0002	0.000008	0.012	0.000	0.01
16	1	15 - 16	2039	3	0.00004	0.0032	0.0044	0.001	0.000	0.00004	0.002	16	1	0.0001	0.0001	0.000004	0.0002	0.000008	0.012	0.000	0.01
17	1	16-17	2040	1	0.00004	0.0032	0.0044	0.0001	0.0001	0.000004	0.0002	17	1	0.0001	0.0001	0.000004	0.0002	0.000008	0.012	0.000	0.01
18	1	17-18	2041	1	0.00004	0.0032	0.0044	0.0001	0.0001	0.000004	0.0002	18	1	0.0001	0.0001	0.000004	0.0002	0.000008	0.012	0.000	0.01
19	1	18-19	2042	1	0.00004	0.0032	0.0044	0.0001	0.0001	0.000004	0.0002	19	1	0.0001	0.0001	0.000004	0.0002	0.000008	0.012	0.000	0.01
20	1	19-20	2043	1	0.00004	0.0032	0.0044	0.0001	0.0001	0.000004	0.0002	20	1	0.0001	0.0001	0.000004	0.0002	0.000008	0.012	0.000	0.01
21	1	20-21	2044	1	0.00004	0.0032	0.0044	0.0001	0.0001	0.000004	0.0002	21	1	0.0001	0.0001	0.000004	0.0002	0.000008	0.012	0.000	0.01
22	1	21-22	2045	1	0.00004	0.0032	0.0044	0.0001	0.0001	0.000004	0.0002	22	1	0.0001	0.0001	0.000004	0.0002	0.000008	0.012	0.000	0.01
23	1	22-23	2046	1	0.00004	0.0032	0.0044	0.0001	0.0001	0.000004	0.0002	23	1	0.0001	0.0001	0.000004	0.0002	0.000008	0.012	0.000	0.01
24	1	23-24	2047	1	0.00004	0.0032	0.0044	0.0001	0.0001	0.000004	0.0002	24	1	0.0001	0.0001	0.000004	0.0002	0.000008	0.012	0.000	0.01
25	1	24-25	2048	1	0.00004	0.0032	0.0044	0.0001	0.0001	0.000004	0.0002	25	1	0.0001	0.0001	0.000004	0.0002	0.000008	0.012	0.000	0.01
26	1	25-26	2049	1	0.00004	0.0032	0.0044	0.0001	0.0001	0.000004	0.0002	26	1	0.0001	0.0001	0.000004	0.0002	0.000008	0.012	0.000	0.01
27	1	26-27	2050	1	0.00004	0.0032	0.0044	0.0001	0.0001	0.000004	0.0002	27	1	0.0001	0.0001	0.000004	0.0002	0.000008	0.012	0.000	0.01
28	1	27-28	2051	1	0.00004	0.0032	0.0044	0.0001	0.0001	0.000004	0.0002	28	1	0.0001	0.0001	0.000004	0.0002	0.000008	0.012	0.000	0.01
29	1	28-29	2052	1	0.00004	0.0032	0.0044	0.0001	0.0001	0.000004	0.0002	29	1	0.0001	0.0001	0.000004	0.0002	0.000008	0.012	0.000	0.01
30	1	29-30	2053	1	0.00004	0.0032	0.0044	0.0001	0.0001	0.000004	0.0002	30	1	0.0001	0.0001	0.000004	0.0002	0.000008	0.012	0.000	0.01
							Total Increased Cancer Risk	**0.030**	**0.01**	**0.001**	**0.044**			**Total Increased Adult Risk**	**0.003**	**0.002**	**0.0001**	**0.01**			

* Third trimester of pregnancy

Milpitas Blvd. Bridge Project, Milpitas - Total Project Impacts
DPM Cancer Risk and PM2.5 Calculations
Impacts at Off-Site Multi-Family Homes - 7.6 meter receptor height

Cancer Risk (per million) = CPF x Inhalation Dose x ASF x ED/AT x FAH x 1.0E6

Where: CPF = Cancer potency factor $(mg/kg\text{-}day)^{-1}$
ASF = Age sensitivity factor for specified age group
ED = Exposure duration (years)
AT = Averaging time for lifetime cancer risk (years)
FAH = Fraction of time spent at home (unitless)

Inhalation Dose = C_{air} x DBR x A x (EF/365) x 10^{-6}

Where: C_{air} = concentration in air ($\mu g/m^3$)
DBR = daily breathing rate (L/kg body weight-day)
A = Inhalation absorption factor
EF = Exposure frequency (days/year)
10^{-6} = Conversion factor

Values

	Infant/Child			Adult
Age --> **Parameter**	**3rd Trimester**	**0 - 2**	**2 - 16**	**16 - 30**
ASF =	10	10	3	1
DPM CPF =	1.10E+00	1.10E+00	1.10E+00	1.10E+00
TOG Exhaust CPF =	6.28E-03	6.28E-03	6.28E-03	6.28E-03
TOG Evaporative CPF =	3.70E-04	3.70E-04	3.70E-04	3.70E-04
DBR* =	361	1090	572	261
A =	1	1	1	1
EF =	350	350	350	350
AT =	70	70	70	70
FAH =	1.00	1.00	1.00	0.73

* 95th percentile breathing rates for infants and 80th percentile for children and adults

Project Cancer Risk by Year - Maximum Impact Receptor Location

Infant/Child Exposure Information					TAC Concentrations (ug/m3)			DPM	Exhaust TOG	Evaporative TOG	TOTAL	Adult Exposure Only										
Exposure Year	**Exposure Duration (years)**	**Age**	**Year**	**Age Sensitivity Factor**	**DPM**	**Exhaust TOG**	**Evaporative TOG**	**Cancer Risk (per million)**	**Cancer Risk (per million)**	**Cancer Risk (per million)**	**Cancer Risk (per million)**	**Exposure Year**	**Age Sensitivity Factor**	**DPM Cancer Risk (per million)**	**Exhaust TOG Cancer Risk (per million)**	**Evaporative TOG Cancer Risk (per million)**	**TOTAL Cancer Risk (per million)**	**HI**	**Maximum Fugitive PM2.5**	**Maximum Exhaust PM2.5**	**Total PM2.5**
0	0.25	-0.25 - 0*	2024	10	0.00003	0.0020	0.00	0.0004	0.0002	0.0000	0.00	0									
1	1	0 - 1	2024	10	0.00003	0.0020	0.00	0.0049	0.0019	0.0002	0.01	1	1	0.0001	0.00003	0.000003	0.0001	0.000	0.008	0.0002	0.01
2	1	1 - 2	2025	10	0.00003	0.0020	0.00	0.0049	0.0019	0.0002	0.01	2	1	0.0001	0.00003	0.000003	0.0001	0.000	0.008	0.0002	0.01
3	1	2 - 3	2026	3	0.00003	0.0020	0.0028	0.001	0.0003	0.00002	0.001	3	1	0.0001	0.00003	0.000003	0.0001	0.000006	0.008	0.0002	0.01
4	1	3 - 4	2027	3	0.00003	0.0020	0.0028	0.001	0.0003	0.00002	0.001	4	1	0.0001	0.00003	0.000003	0.0001	0.000006	0.008	0.0002	0.01
5	1	4 - 5	2028	3	0.00003	0.0020	0.0028	0.001	0.0003	0.00002	0.001	5	1	0.0001	0.00003	0.000003	0.0001	0.000006	0.008	0.000	0.01
6	1	5 - 6	2029	3	0.00003	0.0020	0.0028	0.001	0.0003	0.00002	0.001	6	1	0.0001	0.00003	0.000003	0.0001	0.000006	0.008	0.000	0.01
7	1	6 - 7	2030	3	0.00003	0.0020	0.0028	0.001	0.0003	0.00002	0.001	7	1	0.0001	0.00003	0.000003	0.0001	0.000006	0.008	0.000	0.01
8	1	7 - 8	2031	3	0.00003	0.0020	0.0028	0.001	0.0003	0.00002	0.001	8	1	0.0001	0.00003	0.000003	0.0001	0.000006	0.008	0.000	0.01
9	1	8 - 9	2032	3	0.00003	0.0020	0.0028	0.001	0.0003	0.00002	0.001	9	1	0.0001	0.00003	0.000003	0.0001	0.000006	0.008	0.000	0.01
10	1	9 - 10	2033	3	0.00003	0.0020	0.0028	0.001	0.0003	0.00002	0.001	10	1	0.0001	0.00003	0.000003	0.0001	0.000006	0.008	0.000	0.01
11	1	10 - 11	2034	3	0.00003	0.0020	0.0028	0.001	0.0003	0.00002	0.001	11	1	0.0001	0.00003	0.000003	0.0001	0.000006	0.008	0.000	0.01
12	1	11 - 12	2035	3	0.00003	0.0020	0.0028	0.001	0.0003	0.00002	0.001	12	1	0.0001	0.00003	0.000003	0.0001	0.000006	0.008	0.000	0.01
13	1	12 - 13	2036	3	0.00003	0.0020	0.0028	0.001	0.0003	0.00002	0.001	13	1	0.0001	0.00003	0.000003	0.0001	0.000006	0.008	0.000	0.01
14	1	13 - 14	2037	3	0.00003	0.0020	0.0028	0.001	0.0003	0.00002	0.001	14	1	0.0001	0.00003	0.000003	0.0001	0.000006	0.008	0.000	0.01
15	1	14 - 15	2038	3	0.00003	0.0020	0.0028	0.001	0.0003	0.00002	0.001	15	1	0.0001	0.00003	0.000003	0.0001	0.000006	0.008	0.000	0.01
16	1	15 - 16	2039	3	0.00003	0.0020	0.0028	0.001	0.0003	0.00002	0.001	16	1	0.0001	0.00003	0.000003	0.0001	0.000006	0.008	0.000	0.01
17	1	16-17	2040	1	0.00003	0.0020	0.0028	0.0001	0.0000	0.000003	0.0001	17	1	0.0001	0.00003	0.000003	0.0001	0.000006	0.008	0.000	0.01
18	1	17-18	2041	1	0.00003	0.0020	0.0028	0.0001	0.0000	0.000003	0.0001	18	1	0.0001	0.00003	0.000003	0.0001	0.000006	0.008	0.000	0.01
19	1	18-19	2042	1	0.00003	0.0020	0.0028	0.0001	0.0000	0.000003	0.0001	19	1	0.0001	0.00003	0.000003	0.0001	0.000006	0.008	0.000	0.01
20	1	19-20	2043	1	0.00003	0.0020	0.0028	0.0001	0.0000	0.000003	0.0001	20	1	0.0001	0.00003	0.000003	0.0001	0.000006	0.008	0.000	0.01
21	1	20-21	2044	1	0.00003	0.0020	0.0028	0.0001	0.0000	0.000003	0.0001	21	1	0.0001	0.00003	0.000003	0.0001	0.000006	0.008	0.000	0.01
22	1	21-22	2045	1	0.00003	0.0020	0.0028	0.0001	0.0000	0.000003	0.0001	22	1	0.0001	0.00003	0.000003	0.0001	0.000006	0.008	0.000	0.01
23	1	22-23	2046	1	0.00003	0.0020	0.0028	0.0001	0.0000	0.000003	0.0001	23	1	0.0001	0.00003	0.000003	0.0001	0.000006	0.008	0.000	0.01
24	1	23-24	2047	1	0.00003	0.0020	0.0028	0.0001	0.0000	0.000003	0.0001	24	1	0.0001	0.00003	0.000003	0.0001	0.000006	0.008	0.000	0.01
25	1	24-25	2048	1	0.00003	0.0020	0.0028	0.0001	0.0000	0.000003	0.0001	25	1	0.0001	0.00003	0.000003	0.0001	0.000006	0.008	0.000	0.01
26	1	25-26	2049	1	0.00003	0.0020	0.0028	0.0001	0.0000	0.000003	0.0001	26	1	0.0001	0.00003	0.000003	0.0001	0.000006	0.008	0.000	0.01
27	1	26-27	2050	1	0.00003	0.0020	0.0028	0.0001	0.0000	0.000003	0.0001	27	1	0.0001	0.00003	0.000003	0.0001	0.000006	0.008	0.000	0.01
28	1	27-28	2051	1	0.00003	0.0020	0.0028	0.0001	0.0000	0.000003	0.0001	28	1	0.0001	0.00003	0.000003	0.0001	0.000006	0.008	0.000	0.01
29	1	28-29	2052	1	0.00003	0.0020	0.0028	0.0001	0.0000	0.000003	0.0001	29	1	0.0001	0.00003	0.000003	0.0001	0.000006	0.008	0.000	0.01
30	1	29-30	2053	1	0.00003	0.0020	0.0028	0.0001	0.0000	0.000003	0.0001	30	1	0.0001	0.00003	0.000003	0.0001	0.000006	0.008	0.000	0.01
							Total Increased Cancer Risk	**0.02**	**0.01**	**0.001**	**0.03**			**Total Increased Adult Risk**	**0.003**	**0.001**	**0.0001**	**0.004**			

* Third trimester of pregnancy

Milpitas Blvd. Bridge Project , Milpitas - Total Project Impacts - Without Mitigation
DPM Cancer Risk and PM2.5 Calculations
Impacts at Off-Site Multi-Family Homes - 1.5 meter receptor height

Cancer Risk (per million) = CPF x Inhalation Dose x ASF x ED/AT x FAH x 1.0E6

Where: CPF = Cancer potency factor $(mg/kg\text{-}day)^{1}$
ASF = Age sensitivity factor for specified age group
ED = Exposure duration (years)
AT = Averaging time for lifetime cancer risk (years)
FAH = Fraction of time spent at home (unitless)

Inhalation Dose = C_{air} x DBR x A x (EF/365) x 10^{-6}

Where: C_{air} = concentration in air ($\mu g/m^3$)
DBR = daily breathing rate (L/kg body weight-day)
A = Inhalation absorption factor
EF = Exposure frequency (days/year)
10^{-6} = Conversion factor

Values

	Infant/Child			Adult
Age --> **Parameter**	**3rd Trimester**	**0 - 2**	**2 - 16**	**16 - 30**
ASF =	10	10	3	1
DPM CPF =	1.10E+00	1.10E+00	1.10E+00	1.10E+00
TOG Exhaust CPF =	6.28E-03	6.28E-03	6.28E-03	6.28E-03
TOG Evaporative CPF =	3.70E-04	3.70E-04	3.70E-04	3.70E-04
DBR* =	361	1090	572	261
A =	1	1	1	1
EF =	350	350	350	350
AT =	70	70	70	70
FAH =	1.00	1.00	1.00	0.73

* 95th percentile breathing rates for infants and 80th percentile for children and adults

Project Cancer Risk by Year - MEI Receptor Location

Infant/Child Exposure Information					TAC Concentrations (ug/m3)			DPM	Exhaust TOG	Evaporative TOG	TOTAL	Adult Exposure Only									
Exposure Year	**Exposure Duration (years)**	**Age**	**Year**	**Age Sensitivity Factor**	**DPM**	**Exhaust TOG**	**Evaporative TOG**	**Cancer Risk (per million)**	**Cancer Risk (per million)**	**Cancer Risk (per million)**	**Cancer Risk (per million)**	**Exposure Year**	**Age Sensitivity Factor**	**DPM Cancer Risk (per million)**	**Exhaust TOG Cancer Risk (per million)**	**Evaporative TOG Cancer Risk (per million)**	**TOTAL Cancer Risk (per million)**		**Maximum**		
																		HI	**Fugitive PM2.5**	**Exhaust PM2.5**	**Total PM2.5**
0	0.25	-0.25 - 0*	2023	10	0.0856	0.00	0.00	1.16	0.00	0.00	1.16	0									
1	1	0 - 1	2023	10	0.0856	0.00	0.00	14.06	0.00	0.00	14.06	1	1	0.2457	0.0000	0.0000	0.25	0.017	0.4876	0.0000	0.57
2	1	1 - 2	2024	10	0.1204	0.00	0.00	19.77	0.00	0.00	19.77	2	1	0.3456	0.0000	0.0000	0.35	0.024	0.7479	0.0000	0.87
3	1	2 - 3	2025	3	0.0001	0.0039	0.0054	0.001	0.001	0.00005	0.002	3	1	0.0001	0.0001	0.00001	0.0002	0.00001	0.015	0.0003	0.02
4	1	3 - 4	2026	3	0.0001	0.0039	0.0054	0.001	0.001	0.00005	0.002	4	1	0.0001	0.0001	0.00001	0.0002	0.00001	0.015	0.0003	0.02
5	1	4 - 5	2027	3	0.0001	0.0039	0.0054	0.001	0.001	0.00005	0.002	5	1	0.0001	0.0001	0.00001	0.0002	0.00001	0.015	0.000	0.02
6	1	5 - 6	2028	3	0.0001	0.0039	0.0054	0.001	0.001	0.00005	0.002	6	1	0.0001	0.0001	0.00001	0.0002	0.00001	0.015	0.000	0.02
7	1	6 - 7	2029	3	0.0001	0.0039	0.0054	0.001	0.001	0.00005	0.002	7	1	0.0001	0.0001	0.00001	0.0002	0.00001	0.015	0.000	0.02
8	1	7 - 8	2030	3	0.0001	0.0039	0.0054	0.001	0.001	0.00005	0.002	8	1	0.0001	0.0001	0.00001	0.0002	0.00001	0.015	0.000	0.02
9	1	8 - 9	2031	3	0.0001	0.0039	0.0054	0.001	0.001	0.00005	0.002	9	1	0.0001	0.0001	0.00001	0.0002	0.00001	0.015	0.000	0.02
10	1	9 - 10	2032	3	0.0001	0.0039	0.0054	0.001	0.001	0.00005	0.002	10	1	0.0001	0.0001	0.00001	0.0002	0.00001	0.015	0.000	0.02
11	1	10 - 11	2033	3	0.0001	0.0039	0.0054	0.001	0.001	0.00005	0.002	11	1	0.0001	0.0001	0.00001	0.0002	0.00001	0.015	0.000	0.02
12	1	11 - 12	2034	3	0.0001	0.0039	0.0054	0.001	0.001	0.00005	0.002	12	1	0.0001	0.0001	0.00001	0.0002	0.00001	0.015	0.000	0.02
13	1	12 - 13	2035	3	0.0001	0.0039	0.0054	0.001	0.001	0.00005	0.002	13	1	0.0001	0.0001	0.00001	0.0002	0.00001	0.015	0.000	0.02
14	1	13 - 14	2036	3	0.0001	0.0039	0.0054	0.001	0.001	0.00005	0.002	14	1	0.0001	0.0001	0.00001	0.0002	0.00001	0.015	0.000	0.02
15	1	14 - 15	2037	3	0.0001	0.0039	0.0054	0.001	0.001	0.00005	0.002	15	1	0.0001	0.0001	0.00001	0.0002	0.00001	0.015	0.000	0.02
16	1	15 - 16	2038	3	0.0001	0.0039	0.0054	0.001	0.001	0.00005	0.002	16	1	0.0001	0.0001	0.00001	0.0002	0.00001	0.015	0.000	0.02
17	1	16-17	2039	1	0.0001	0.0039	0.0054	0.0001	0.0001	0.00001	0.0002	17	1	0.0001	0.0001	0.00001	0.0002	0.00001	0.015	0.000	0.02
18	1	17-18	2040	1	0.0001	0.0039	0.0054	0.0001	0.0001	0.00001	0.0002	18	1	0.0001	0.0001	0.00001	0.0002	0.00001	0.015	0.000	0.02
19	1	18-19	2041	1	0.0001	0.0039	0.0054	0.0001	0.0001	0.00001	0.0002	19	1	0.0001	0.0001	0.00001	0.0002	0.00001	0.015	0.000	0.02
20	1	19-20	2042	1	0.0001	0.0039	0.0054	0.0001	0.0001	0.00001	0.0002	20	1	0.0001	0.0001	0.00001	0.0002	0.00001	0.015	0.000	0.02
21	1	20-21	2043	1	0.0001	0.0039	0.0054	0.0001	0.0001	0.00001	0.0002	21	1	0.0001	0.0001	0.00001	0.0002	0.00001	0.015	0.000	0.02
22	1	21-22	2044	1	0.0001	0.0039	0.0054	0.0001	0.0001	0.00001	0.0002	22	1	0.0001	0.0001	0.00001	0.0002	0.00001	0.015	0.000	0.02
23	1	22-23	2045	1	0.0001	0.0039	0.0054	0.0001	0.0001	0.00001	0.0002	23	1	0.0001	0.0001	0.00001	0.0002	0.00001	0.015	0.000	0.02
24	1	23-24	2046	1	0.0001	0.0039	0.0054	0.0001	0.0001	0.00001	0.0002	24	1	0.0001	0.0001	0.00001	0.0002	0.00001	0.015	0.000	0.02
25	1	24-25	2047	1	0.0001	0.0039	0.0054	0.0001	0.0001	0.00001	0.0002	25	1	0.0001	0.0001	0.00001	0.0002	0.00001	0.015	0.000	0.02
26	1	25-26	2048	1	0.0001	0.0039	0.0054	0.0001	0.0001	0.00001	0.0002	26	1	0.0001	0.0001	0.00001	0.0002	0.00001	0.015	0.000	0.02
27	1	26-27	2049	1	0.0001	0.0039	0.0054	0.0001	0.0001	0.00001	0.0002	27	1	0.0001	0.0001	0.00001	0.0002	0.00001	0.015	0.000	0.02
28	1	27-28	2050	1	0.0001	0.0039	0.0054	0.0001	0.0001	0.00001	0.0002	28	1	0.0001	0.0001	0.00001	0.0002	0.00001	0.015	0.000	0.02
29	1	28-29	2051	1	0.0001	0.0039	0.0054	0.0001	0.0001	0.00001	0.0002	29	1	0.0001	0.0001	0.00001	0.0002	0.00001	0.015	0.000	0.02
30	1	29-30	2052	1	0.0001	0.0039	0.0054	0.0001	0.0001	0.00001	0.0002	30	1	0.0001	0.0001	0.00001	0.0002	0.00001	0.015	0.000	0.02
							Total Increased Cancer Risk	**35.01**	**0.01**	**0.001**	**35.02**	**Total Increased Adult Risk**		**0.60**	**0.002**	**0.0001**	**0.60**				

* Third trimester of pregnancy

Milpitas Blvd. Bridge Project , Milpitas - Total Project Impacts - With AQ-1 and AQ-2 Mitigation
DPM Cancer Risk and PM2.5 Calculations
Impacts at Off-Site Multi-Family Homes - 1.5 meter receptor height

Cancer Risk (per million) = CPF x Inhalation Dose x ASF x ED/AT x FAH x 1.0E6

Where: CPF = Cancer potency factor $(mg/kg\text{-}day)^{-1}$
ASF = Age sensitivity factor for specified age group
ED = Exposure duration (years)
AT = Averaging time for lifetime cancer risk (years)
FAH = Fraction of time spent at home (unitless)

Inhalation Dose = C_{air} x DBR x A x (EF/365) x 10^{-6}

Where: C_{air} = concentration in air ($\mu g/m^3$)
DBR = daily breathing rate (L/kg body weight-day)
A = Inhalation absorption factor
EF = Exposure frequency (days/year)
10^{-6} = Conversion factor

Values

	Infant/Child			Adult
Age -->	**3rd Trimester**	**0 - 2**	**2 - 16**	**16 - 30**
Parameter				
ASF =	10	10	3	1
DPM CPF =	1.10E+00	1.10E+00	1.10E+00	1.10E+00
TOG Exhaust CPF =	6.28E-03	6.28E-03	6.28E-03	6.28E-03
TOG Evaporative CPF =	3.70E-04	3.70E-04	3.70E-04	3.70E-04
DBR* =	361	1090	572	261
A =	1	1	1	1
EF =	350	350	350	350
AT =	70	70	70	70
FAH =	1.00	1.00	1.00	0.73

* 95th percentile breathing rates for infants and 80th percentile for children and adults

Project Cancer Risk by Year - MEI Receptor Location

Infant/Child Exposure Information					TAC Concentrations (ug/m3)			DPM	Exhaust TOG	Evaporative TOG	TOTAL	Adult Exposure Only										
Exposure Year	Exposure Duration (years)	Age	Year	Age Sensitivity Factor	DPM	Exhaust TOG	Evaporative TOG	Cancer Risk (per million)	Cancer Risk (per million)	Cancer Risk (per million)	Cancer Risk (per million)	Exposure Year	Age Sensitivity Factor	DPM Cancer Risk (per million)	Exhaust TOG Cancer Risk (per million)	Evaporative TOG Cancer Risk (per million)	TOTAL Cancer Risk (per million)	HI	Maximum Fugitive PM2.5	Maximum Exhaust PM2.5	Total PM2.5
0	0.25	-0.25 - 0*	2023	10	0.0086	0.00	0.00	0.12	0.00	0.00	0.12	0									
1	1	0 - 1	2023	10	0.0086	0.00	0.00	1.41	0.00	0.00	1.41	1	1	0.0246	0.00	0.00	0.02	0.002	0.1517	0.0000	0.16
2	1	1 - 2	2024	10	0.0120	0.00	0.00	1.98	0.00	0.00	1.98	2	1	0.0346	0.00	0.00	0.03	0.002	0.2327	0.0000	0.24
3	1	2 - 3	2025	3	0.0001	0.0039	0.0054	0.001	0.001	0.00005	0.002	3	1	0.0001	0.0001	0.00001	0.0002	0.00001	0.015	0.0003	0.02
4	1	3 - 4	2026	3	0.0001	0.0039	0.0054	0.001	0.001	0.00005	0.002	4	1	0.0001	0.0001	0.00001	0.0002	0.00001	0.015	0.0003	0.02
5	1	4 - 5	2027	3	0.0001	0.0039	0.0054	0.001	0.001	0.00005	0.002	5	1	0.0001	0.0001	0.00001	0.0002	0.00001	0.015	0.000	0.02
6	1	5 - 6	2028	3	0.0001	0.0039	0.0054	0.001	0.001	0.00005	0.002	6	1	0.0001	0.0001	0.00001	0.0002	0.00001	0.015	0.000	0.02
7	1	6 - 7	2029	3	0.0001	0.0039	0.0054	0.001	0.001	0.00005	0.002	7	1	0.0001	0.0001	0.00001	0.0002	0.00001	0.015	0.000	0.02
8	1	7 - 8	2030	3	0.0001	0.0039	0.0054	0.001	0.001	0.00005	0.002	8	1	0.0001	0.0001	0.00001	0.0002	0.00001	0.015	0.000	0.02
9	1	8 - 9	2031	3	0.0001	0.0039	0.0054	0.001	0.001	0.00005	0.002	9	1	0.0001	0.0001	0.00001	0.0002	0.00001	0.015	0.000	0.02
10	1	9 - 10	2032	3	0.0001	0.0039	0.0054	0.001	0.001	0.00005	0.002	10	1	0.0001	0.0001	0.00001	0.0002	0.00001	0.015	0.000	0.02
11	1	10 - 11	2033	3	0.0001	0.0039	0.0054	0.001	0.001	0.00005	0.002	11	1	0.0001	0.0001	0.00001	0.0002	0.00001	0.015	0.000	0.02
12	1	11 - 12	2034	3	0.0001	0.0039	0.0054	0.001	0.001	0.00005	0.002	12	1	0.0001	0.0001	0.00001	0.0002	0.00001	0.015	0.000	0.02
13	1	12 - 13	2035	3	0.0001	0.0039	0.0054	0.001	0.001	0.00005	0.002	13	1	0.0001	0.0001	0.00001	0.0002	0.00001	0.015	0.000	0.02
14	1	13 - 14	2036	3	0.0001	0.0039	0.0054	0.001	0.001	0.00005	0.002	14	1	0.0001	0.0001	0.00001	0.0002	0.00001	0.015	0.000	0.02
15	1	14 - 15	2037	3	0.0001	0.0039	0.0054	0.001	0.001	0.00005	0.002	15	1	0.0001	0.0001	0.00001	0.0002	0.00001	0.015	0.000	0.02
16	1	15 - 16	2038	3	0.0001	0.0039	0.0054	0.001	0.001	0.00005	0.002	16	1	0.0001	0.0001	0.00001	0.0002	0.00001	0.015	0.000	0.02
17	1	16-17	2039	1	0.0001	0.0039	0.0054	0.0001	0.0001	0.00001	0.0002	17	1	0.0001	0.0001	0.00001	0.0002	0.00001	0.015	0.000	0.02
18	1	17-18	2040	1	0.0001	0.0039	0.0054	0.0001	0.0001	0.00001	0.0002	18	1	0.0001	0.0001	0.00001	0.0002	0.00001	0.015	0.000	0.02
19	1	18-19	2041	1	0.0001	0.0039	0.0054	0.0001	0.0001	0.00001	0.0002	19	1	0.0001	0.0001	0.00001	0.0002	0.00001	0.015	0.000	0.02
20	1	19-20	2042	1	0.0001	0.0039	0.0054	0.0001	0.0001	0.00001	0.0002	20	1	0.0001	0.0001	0.00001	0.0002	0.00001	0.015	0.000	0.02
21	1	20-21	2043	1	0.0001	0.0039	0.0054	0.0001	0.0001	0.00001	0.0002	21	1	0.0001	0.0001	0.00001	0.0002	0.00001	0.015	0.000	0.02
22	1	21-22	2044	1	0.0001	0.0039	0.0054	0.0001	0.0001	0.00001	0.0002	22	1	0.0001	0.0001	0.00001	0.0002	0.00001	0.015	0.000	0.02
23	1	22-23	2045	1	0.0001	0.0039	0.0054	0.0001	0.0001	0.00001	0.0002	23	1	0.0001	0.0001	0.00001	0.0002	0.00001	0.015	0.000	0.02
24	1	23-24	2046	1	0.0001	0.0039	0.0054	0.0001	0.0001	0.00001	0.0002	24	1	0.0001	0.0001	0.00001	0.0002	0.00001	0.015	0.000	0.02
25	1	24-25	2047	1	0.0001	0.0039	0.0054	0.0001	0.0001	0.00001	0.0002	25	1	0.0001	0.0001	0.00001	0.0002	0.00001	0.015	0.000	0.02
26	1	25-26	2048	1	0.0001	0.0039	0.0054	0.0001	0.0001	0.00001	0.0002	26	1	0.0001	0.0001	0.00001	0.0002	0.00001	0.015	0.000	0.02
27	1	26-27	2049	1	0.0001	0.0039	0.0054	0.0001	0.0001	0.00001	0.0002	27	1	0.0001	0.0001	0.00001	0.0002	0.00001	0.015	0.000	0.02
28	1	27-28	2050	1	0.0001	0.0039	0.0054	0.0001	0.0001	0.00001	0.0002	28	1	0.0001	0.0001	0.00001	0.0002	0.00001	0.015	0.000	0.02
29	1	28-29	2051	1	0.0001	0.0039	0.0054	0.0001	0.0001	0.00001	0.0002	29	1	0.0001	0.0001	0.00001	0.0002	0.00001	0.015	0.000	0.02
30	1	29-30	2052	1	0.0001	0.0039	0.0054	0.0001	0.0001	0.00001	0.0002	30	1	0.0001	0.0001	0.00001	0.0002	0.00001	0.015	0.000	0.02
							Total Increased Cancer Risk	**3.519**	**0.01**	**0.001**	**3.529**			**Total Increased Adult Risk**	**0.06**	**0.002**	**0.0001**	**0.07**				

* Third trimester of pregnancy

Milpitas Blvd. Bridge Project, Milpitas - Total Project Impacts - Without Mitigation
DPM Cancer Risk and PM2.5 Calculations
Impacts at Off-Site Multi-Family Homes - 4.6 meter receptor height

Cancer Risk (per million) = CPF x Inhalation Dose x ASF x ED/AT x FAH x 1.0E6

Where: CPF = Cancer potency factor $(mg/kg\text{-}day)^{-1}$
ASF = Age sensitivity factor for specified age group
ED = Exposure duration (years)
AT = Averaging time for lifetime cancer risk (years)
FAH = Fraction of time spent at home (unitless)

Inhalation Dose = C_{air} x DBR x A x (EF/365) x 10^{-6}

Where: C_{air} = concentration in air ($\mu g/m^3$)
DBR = daily breathing rate (L/kg body weight-day)
A = Inhalation absorption factor
EF = Exposure frequency (days/year)
10^{-6} = Conversion factor

Values

	Infant/Child			Adult
Age --> **Parameter**	**3rd Trimester**	**0 - 2**	**2 - 16**	**16 - 30**
ASF =	10	10	3	1
DPM CPF =	1.10E+00	1.10E+00	1.10E+00	1.10E+00
TOG Exhaust CPF =	6.28E-03	6.28E-03	6.28E-03	6.28E-03
TOG Evaporative CPF =	3.70E-04	3.70E-04	3.70E-04	3.70E-04
DBR* =	361	1090	572	261
A =	1	1	1	1
EF =	350	350	350	350
AT =	70	70	70	70
FAH =	1.00	1.00	1.00	0.73

* 95th percentile breathing rates for infants and 80th percentile for children and adults

Project Cancer Risk by Year - MEI Receptor Location

Infant/Child Exposure Information					TAC Concentrations (ug/m3)			DPM	Exhaust TOG	Evaporative TOG	TOTAL	Adult Exposure Only										
Exposure Year	**Exposure Duration (years)**	**Age**	**Year**	**Age Sensitivity Factor**	**DPM**	**Exhaust TOG**	**Evaporative TOG**	**Cancer Risk (per million)**	**Cancer Risk (per million)**	**Cancer Risk (per million)**	**Cancer Risk (per million)**	**Exposure Year**	**Age Sensitivity Factor**	**DPM Cancer Risk (per million)**	**Exhaust TOG Cancer Risk (per million)**	**Evaporative TOG Cancer Risk (per million)**	**TOTAL Cancer Risk (per million)**	**HI**	**Maximum Fugitive PM2.5**	**Maximum Exhaust PM2.5**	**Total PM2.5**
0	0.25	-0.25 - 0*	2023	10	0.2024	0.00	0.00	2.75	0.00	0.00	2.75	0									
1	1	0 - 1	2023	10	0.2024	0.00	0.00	33.25	0.00	0.00	33.25	1	1	0.5812	0.00	0.000000	0.58	0.040	0.2536	0.0000	0.46
2	1	1 - 2	2024	10	0.2847	0.00	0.00	46.76	0.00	0.00	46.76	2	1	0.8174	0.00	0.000000	0.82	0.057	0.3890	0.0000	0.67
3	1	2 - 3	2025	3	0.00004	0.0032	0.0044	0.001	0.000	0.00004	0.002	3	1	0.0001	0.0001	0.000004	0.0002	0.000008	0.012	0.0002	0.01
4	1	3 - 4	2026	3	0.00004	0.0032	0.0044	0.001	0.000	0.00004	0.002	4	1	0.0001	0.0001	0.000004	0.0002	0.000008	0.012	0.0002	0.01
5	1	4 - 5	2027	3	0.00004	0.0032	0.0044	0.001	0.000	0.00004	0.002	5	1	0.0001	0.0001	0.000004	0.0002	0.000008	0.012	0.000	0.01
6	1	5 - 6	2028	3	0.00004	0.0032	0.0044	0.001	0.000	0.00004	0.002	6	1	0.0001	0.0001	0.000004	0.0002	0.000008	0.012	0.000	0.01
7	1	6 - 7	2029	3	0.00004	0.0032	0.0044	0.001	0.000	0.00004	0.002	7	1	0.0001	0.0001	0.000004	0.0002	0.000008	0.012	0.000	0.01
8	1	7 - 8	2030	3	0.00004	0.0032	0.0044	0.001	0.000	0.00004	0.002	8	1	0.0001	0.0001	0.000004	0.0002	0.000008	0.012	0.000	0.01
9	1	8 - 9	2031	3	0.00004	0.0032	0.0044	0.001	0.000	0.00004	0.002	9	1	0.0001	0.0001	0.000004	0.0002	0.000008	0.012	0.000	0.01
10	1	9 - 10	2032	3	0.00004	0.0032	0.0044	0.001	0.000	0.00004	0.002	10	1	0.0001	0.0001	0.000004	0.0002	0.000008	0.012	0.000	0.01
11	1	10 - 11	2033	3	0.00004	0.0032	0.0044	0.001	0.000	0.00004	0.002	11	1	0.0001	0.0001	0.000004	0.0002	0.000008	0.012	0.000	0.01
12	1	11 - 12	2034	3	0.00004	0.0032	0.0044	0.001	0.000	0.00004	0.002	12	1	0.0001	0.0001	0.000004	0.0002	0.000008	0.012	0.000	0.01
13	1	12 - 13	2035	3	0.00004	0.0032	0.0044	0.001	0.000	0.00004	0.002	13	1	0.0001	0.0001	0.000004	0.0002	0.000008	0.012	0.000	0.01
14	1	13 - 14	2036	3	0.00004	0.0032	0.0044	0.001	0.000	0.00004	0.002	14	1	0.0001	0.0001	0.000004	0.0002	0.000008	0.012	0.000	0.01
15	1	14 - 15	2037	3	0.00004	0.0032	0.0044	0.001	0.000	0.00004	0.002	15	1	0.0001	0.0001	0.000004	0.0002	0.000008	0.012	0.000	0.01
16	1	15 - 16	2038	3	0.00004	0.0032	0.0044	0.001	0.000	0.00004	0.002	16	1	0.0001	0.0001	0.000004	0.0002	0.000008	0.012	0.000	0.01
17	1	16-17	2039	1	0.00004	0.0032	0.0044	0.0001	0.0001	0.000004	0.0002	17	1	0.0001	0.0001	0.000004	0.0002	0.000008	0.012	0.000	0.01
18	1	17-18	2040	1	0.00004	0.0032	0.0044	0.0001	0.0001	0.000004	0.0002	18	1	0.0001	0.0001	0.000004	0.0002	0.000008	0.012	0.000	0.01
19	1	18-19	2041	1	0.00004	0.0032	0.0044	0.0001	0.0001	0.000004	0.0002	19	1	0.0001	0.0001	0.000004	0.0002	0.000008	0.012	0.000	0.01
20	1	19-20	2042	1	0.00004	0.0032	0.0044	0.0001	0.0001	0.000004	0.0002	20	1	0.0001	0.0001	0.000004	0.0002	0.000008	0.012	0.000	0.01
21	1	20-21	2043	1	0.00004	0.0032	0.0044	0.0001	0.0001	0.000004	0.0002	21	1	0.0001	0.0001	0.000004	0.0002	0.000008	0.012	0.000	0.01
22	1	21-22	2044	1	0.00004	0.0032	0.0044	0.0001	0.0001	0.000004	0.0002	22	1	0.0001	0.0001	0.000004	0.0002	0.000008	0.012	0.000	0.01
23	1	22-23	2045	1	0.00004	0.0032	0.0044	0.0001	0.0001	0.000004	0.0002	23	1	0.0001	0.0001	0.000004	0.0002	0.000008	0.012	0.000	0.01
24	1	23-24	2046	1	0.00004	0.0032	0.0044	0.0001	0.0001	0.000004	0.0002	24	1	0.0001	0.0001	0.000004	0.0002	0.000008	0.012	0.000	0.01
25	1	24-25	2047	1	0.00004	0.0032	0.0044	0.0001	0.0001	0.000004	0.0002	25	1	0.0001	0.0001	0.000004	0.0002	0.000008	0.012	0.000	0.01
26	1	25-26	2048	1	0.00004	0.0032	0.0044	0.0001	0.0001	0.000004	0.0002	26	1	0.0001	0.0001	0.000004	0.0002	0.000008	0.012	0.000	0.01
27	1	26-27	2049	1	0.00004	0.0032	0.0044	0.0001	0.0001	0.000004	0.0002	27	1	0.0001	0.0001	0.000004	0.0002	0.000008	0.012	0.000	0.01
28	1	27-28	2050	1	0.00004	0.0032	0.0044	0.0001	0.0001	0.000004	0.0002	28	1	0.0001	0.0001	0.000004	0.0002	0.000008	0.012	0.000	0.01
29	1	28-29	2051	1	0.00004	0.0032	0.0044	0.0001	0.0001	0.000004	0.0002	29	1	0.0001	0.0001	0.000004	0.0002	0.000008	0.012	0.000	0.01
30	1	29-30	2052	1	0.00004	0.0032	0.0044	0.0001	0.0001	0.000004	0.0002	30	1	0.0001	0.0001	0.000004	0.0002	0.000008	0.012	0.000	0.01
							Total Increased Cancer Risk	**82.782**	**0.01**	**0.001**	**82.790**			**Total Increased Adult Risk**	**1.40**	**0.001**	**0.0001**	**1.40**				

* Third trimester of pregnancy

Milpitas Blvd. Bridge Project, Milpitas - Total Project Impacts - With AQ-1 and AQ-2 Mitigation
DPM Cancer Risk and PM2.5 Calculations
Impacts at Off-Site Multi-Family Homes - 4.6 meter receptor height

Cancer Risk (per million) = CPF x Inhalation Dose x ASF x ED/AT x FAH x 1.0E6

Where: CPF = Cancer potency factor $(mg/kg\text{-}day)^{-1}$
ASF = Age sensitivity factor for specified age group
ED = Exposure duration (years)
AT = Averaging time for lifetime cancer risk (years)
FAH = Fraction of time spent at home (unitless)

Inhalation Dose = C_{air} x DBR x A x (EF/365) x 10^{-6}

Where: C_{air} = concentration in air ($\mu g/m^3$)
DBR = daily breathing rate (L/kg body weight-day)
A = Inhalation absorption factor
EF = Exposure frequency (days/year)
10^{-6} = Conversion factor

Values

	Infant/Child			Adult
Age --> **Parameter**	**3rd Trimester**	**0 - 2**	**2 - 16**	**16 - 30**
ASF =	10	10	3	1
DPM CPF =	1.10E+00	1.10E+00	1.10E+00	1.10E+00
TOG Exhaust CPF =	6.28E-03	6.28E-03	6.28E-03	6.28E-03
TOG Evaporative CPF =	3.70E-04	3.70E-04	3.70E-04	3.70E-04
DBR* =	361	1090	572	261
A =	1	1	1	1
EF =	350	350	350	350
AT =	70	70	70	70
FAH =	1.00	1.00	1.00	0.73

* 95th percentile breathing rates for infants and 80th percentile for children and adults

Project Cancer Risk by Year - MEI Receptor Location

Infant/Child Exposure Information					TAC Concentrations (ug/m3)			DPM	Exhaust TOG	Evaporative TOG	TOTAL	Adult Exposure Only										
Exposure Year	**Exposure Duration (years)**	**Age**	**Year**	**Age Sensitivity Factor**	**DPM**	**Exhaust TOG**	**Evaporative TOG**	**Cancer Risk (per million)**	**Cancer Risk (per million)**	**Cancer Risk (per million)**	**Cancer Risk (per million)**	**Exposure Year**	**Age Sensitivity Factor**	**DPM Cancer Risk (per million)**	**Exhaust TOG Cancer Risk (per million)**	**Evaporative TOG Cancer Risk (per million)**	**TOTAL Cancer Risk (per million)**	**HI**	**Maximum Fugitive PM2.5**	**Maximum Exhaust PM2.5**	**Total PM2.5**
0	0.25	-0.25 - 0*	2023	10	0.0202	0.00	0.00	0.28	0.00	0.00	0.28	0									
1	1	0 - 1	2023	10	0.0202	0.00	0.00	3.32	0.00	0.00	3.32	1	1	0.0581	0.00	0.00	0.06	0.004	0.0789	0.0000	0.10
2	1	1 - 2	2024	10	0.0285	0.00	0.00	4.68	0.00	0.00	4.68	2	1	0.0817	0.00	0.00	0.08	0.006	0.1210	0.0000	0.15
3	1	2 - 3	2025	3	0.00004	0.0032	0.0044	0.001	0.0005	0.00004	0.002	3	1	0.0001	0.0001	0.000004	0.0002	0.000008	0.012	0.0002	0.01
4	1	3 - 4	2026	3	0.00004	0.0032	0.0044	0.001	0.0005	0.00004	0.002	4	1	0.0001	0.0001	0.000004	0.0002	0.000008	0.012	0.0002	0.01
5	1	4 - 5	2027	3	0.00004	0.0032	0.0044	0.001	0.0005	0.00004	0.002	5	1	0.0001	0.0001	0.000004	0.0002	0.000008	0.012	0.0002	0.01
6	1	5 - 6	2028	3	0.00004	0.0032	0.0044	0.001	0.0005	0.00004	0.002	6	1	0.0001	0.0001	0.000004	0.0002	0.000008	0.012	0.0002	0.01
7	1	6 - 7	2029	3	0.00004	0.0032	0.0044	0.001	0.0005	0.00004	0.002	7	1	0.0001	0.0001	0.000004	0.0002	0.000008	0.012	0.0002	0.01
8	1	7 - 8	2030	3	0.00004	0.0032	0.0044	0.001	0.0005	0.00004	0.002	8	1	0.0001	0.0001	0.000004	0.0002	0.000008	0.012	0.0002	0.01
9	1	8 - 9	2031	3	0.00004	0.0032	0.0044	0.001	0.0005	0.00004	0.002	9	1	0.0001	0.0001	0.000004	0.0002	0.000008	0.012	0.0002	0.01
10	1	9 - 10	2032	3	0.00004	0.0032	0.0044	0.001	0.0005	0.00004	0.002	10	1	0.0001	0.0001	0.000004	0.0002	0.000008	0.012	0.0002	0.01
11	1	10 - 11	2033	3	0.00004	0.0032	0.0044	0.001	0.0005	0.00004	0.002	11	1	0.0001	0.0001	0.000004	0.0002	0.000008	0.012	0.0002	0.01
12	1	11 - 12	2034	3	0.00004	0.0032	0.0044	0.001	0.0005	0.00004	0.002	12	1	0.0001	0.0001	0.000004	0.0002	0.000008	0.012	0.0002	0.01
13	1	12 - 13	2035	3	0.00004	0.0032	0.0044	0.001	0.0005	0.00004	0.002	13	1	0.0001	0.0001	0.000004	0.0002	0.000008	0.012	0.0002	0.01
14	1	13 - 14	2036	3	0.00004	0.0032	0.0044	0.001	0.0005	0.00004	0.002	14	1	0.0001	0.0001	0.000004	0.0002	0.000008	0.012	0.0002	0.01
15	1	14 - 15	2037	3	0.00004	0.0032	0.0044	0.001	0.0005	0.00004	0.002	15	1	0.0001	0.0001	0.000004	0.0002	0.000008	0.012	0.0002	0.01
16	1	15 - 16	2038	3	0.00004	0.0032	0.0044	0.001	0.0005	0.00004	0.002	16	1	0.0001	0.0001	0.000004	0.0002	0.000008	0.012	0.0002	0.01
17	1	16-17	2039	1	0.00004	0.0032	0.0044	0.0001	0.0001	0.000004	0.0002	17	1	0.0001	0.0001	0.000004	0.0002	0.000008	0.012	0.0002	0.01
18	1	17-18	2040	1	0.00004	0.0032	0.0044	0.0001	0.0001	0.000004	0.0002	18	1	0.0001	0.0001	0.000004	0.0002	0.000008	0.012	0.0002	0.01
19	1	18-19	2041	1	0.00004	0.0032	0.0044	0.0001	0.0001	0.000004	0.0002	19	1	0.0001	0.0001	0.000004	0.0002	0.000008	0.012	0.0002	0.01
20	1	19-20	2042	1	0.00004	0.0032	0.0044	0.0001	0.0001	0.000004	0.0002	20	1	0.0001	0.0001	0.000004	0.0002	0.000008	0.012	0.0002	0.01
21	1	20-21	2043	1	0.00004	0.0032	0.0044	0.0001	0.0001	0.000004	0.0002	21	1	0.0001	0.0001	0.000004	0.0002	0.000008	0.012	0.0002	0.01
22	1	21-22	2044	1	0.00004	0.0032	0.0044	0.0001	0.0001	0.000004	0.0002	22	1	0.0001	0.0001	0.000004	0.0002	0.000008	0.012	0.0002	0.01
23	1	22-23	2045	1	0.00004	0.0032	0.0044	0.0001	0.0001	0.000004	0.0002	23	1	0.0001	0.0001	0.000004	0.0002	0.000008	0.012	0.0002	0.01
24	1	23-24	2046	1	0.00004	0.0032	0.0044	0.0001	0.0001	0.000004	0.0002	24	1	0.0001	0.0001	0.000004	0.0002	0.000008	0.012	0.0002	0.01
25	1	24-25	2047	1	0.00004	0.0032	0.0044	0.0001	0.0001	0.000004	0.0002	25	1	0.0001	0.0001	0.000004	0.0002	0.000008	0.012	0.0002	0.01
26	1	25-26	2048	1	0.00004	0.0032	0.0044	0.0001	0.0001	0.000004	0.0002	26	1	0.0001	0.0001	0.000004	0.0002	0.000008	0.012	0.0002	0.01
27	1	26-27	2049	1	0.00004	0.0032	0.0044	0.0001	0.0001	0.000004	0.0002	27	1	0.0001	0.0001	0.000004	0.0002	0.000008	0.012	0.0002	0.01
28	1	27-28	2050	1	0.00004	0.0032	0.0044	0.0001	0.0001	0.000004	0.0002	28	1	0.0001	0.0001	0.000004	0.0002	0.000008	0.012	0.0002	0.01
29	1	28-29	2051	1	0.00004	0.0032	0.0044	0.0001	0.0001	0.000004	0.0002	29	1	0.0001	0.0001	0.000004	0.0002	0.000008	0.012	0.0002	0.01
30	1	29-30	2052	1	0.00004	0.0032	0.0044	0.0001	0.0001	0.000004	0.0002	30	1	0.0001	0.0001	0.000004	0.0002	0.000008	0.012	0.0002	0.01
							Total Increased Cancer Risk	**8.29**	**0.01**	**0.001**	**8.30**	**Total Increased Adult Risk**		**0.14**	**0.001**	**0.0001**	**0.14**				

* Third trimester of pregnancy

Milpitas Blvd. Bridge Project, Milpitas - Total Project Impacts - Without Mitigation
DPM Cancer Risk and PM2.5 Calculations
Impacts at Off-Site Multi-Family Homes - 7.6 meter receptor height

Cancer Risk (per million) = CPF x Inhalation Dose x ASF x ED/AT x FAH x 1.0E6

Where: CPF = Cancer potency factor $(mg/kg\text{-}day)^{-1}$
ASF = Age sensitivity factor for specified age group
ED = Exposure duration (years)
AT = Averaging time for lifetime cancer risk (years)
FAH = Fraction of time spent at home (unitless)

Inhalation Dose = C_{air} x DBR x A x (EF/365) x 10^{-6}

Where: C_{air} = concentration in air ($\mu g/m^3$)
DBR = daily breathing rate (L/kg body weight-day)
A = Inhalation absorption factor
EF = Exposure frequency (days/year)
10^{-6} = Conversion factor

Values

	Infant/Child			Adult
Age --> Parameter	**3rd Trimester**	**0 - 2**	**2 - 16**	**16 - 30**
ASF =	10	10	3	1
DPM CPF =	1.10E+00	1.10E+00	1.10E+00	1.10E+00
TOG Exhaust CPF =	6.28E-03	6.28E-03	6.28E-03	6.28E-03
TOG Evaporative CPF =	3.70E-04	3.70E-04	3.70E-04	3.70E-04
DBR* =	361	1090	572	261
A =	1	1	1	1
EF =	350	350	350	350
AT =	70	70	70	70
FAH =	1.00	1.00	1.00	0.73

* 95th percentile breathing rates for infants and 80th percentile for children and adults

Project Cancer Risk by Year - MEI Receptor Location

Infant/Child Exposure Information					TAC Concentrations (ug/m3)			DPM	Exhaust TOG	Evaporative TOG	TOTAL	Adult Exposure Only											
Exposure Year	**Exposure Duration (years)**	**Age**	**Year**	**Age Sensitivity Factor**	**DPM**	**Exhaust TOG**	**Evaporative TOG**	**Cancer Risk (per million)**	**Cancer Risk (per million)**	**Cancer Risk (per million)**	**Cancer Risk (per million)**	**Exposure Year**	**Age Sensitivity Factor**	**DPM Cancer Risk (per million)**	**Exhaust TOG Cancer Risk (per million)**	**Evaporative TOG Cancer Risk (per million)**	**TOTAL Cancer Risk (per million)**	**HI**	**Maximum Fugitive PM2.5**	**Maximum Exhaust PM2.5**	**Total PM2.5**
0	0.25	-0.25 - 0*	2023	10	0.1717	0.00	0.00	2.34	0.00	0.00	2.34	0									
1	1	0 - 1	2023	10	0.1717	0.00	0.00	28.21	0.00	0.00	28.21	1	1	0.4931	0.00	0.00	0.49	0.034	0.1274	0.0000	0.30
2	1	1 - 2	2024	10	0.2416	0.00	0.00	39.67	0.00	0.00	39.67	2	1	0.6935	0.00	0.00	0.69	0.048	0.1954	0.0000	0.44
3	1	2 - 3	2025	3	0.00003	0.0020	0.0028	0.001	0.0003	0.00002	0.001	3	1	0.0001	0.00003	0.000003	0.0001	0.000006	0.008	0.0002	0.01
4	1	3 - 4	2026	3	0.00003	0.0020	0.0028	0.001	0.0003	0.00002	0.001	4	1	0.0001	0.00003	0.000003	0.0001	0.000006	0.008	0.0002	0.01
5	1	4 - 5	2027	3	0.00003	0.0020	0.0028	0.001	0.0003	0.00002	0.001	5	1	0.0001	0.00003	0.000003	0.0001	0.000006	0.008	0.000	0.01
6	1	5 - 6	2028	3	0.00003	0.0020	0.0028	0.001	0.0003	0.00002	0.001	6	1	0.0001	0.00003	0.000003	0.0001	0.000006	0.008	0.000	0.01
7	1	6 - 7	2029	3	0.00003	0.0020	0.0028	0.001	0.0003	0.00002	0.001	7	1	0.0001	0.00003	0.000003	0.0001	0.000006	0.008	0.000	0.01
8	1	7 - 8	2030	3	0.00003	0.0020	0.0028	0.001	0.0003	0.00002	0.001	8	1	0.0001	0.00003	0.000003	0.0001	0.000006	0.008	0.000	0.01
9	1	8 - 9	2031	3	0.00003	0.0020	0.0028	0.001	0.0003	0.00002	0.001	9	1	0.0001	0.00003	0.000003	0.0001	0.000006	0.008	0.000	0.01
10	1	9 - 10	2032	3	0.00003	0.0020	0.0028	0.001	0.0003	0.00002	0.001	10	1	0.0001	0.00003	0.000003	0.0001	0.000006	0.008	0.000	0.01
11	1	10 - 11	2033	3	0.00003	0.0020	0.0028	0.001	0.0003	0.00002	0.001	11	1	0.0001	0.00003	0.000003	0.0001	0.000006	0.008	0.000	0.01
12	1	11 - 12	2034	3	0.00003	0.0020	0.0028	0.001	0.0003	0.00002	0.001	12	1	0.0001	0.00003	0.000003	0.0001	0.000006	0.008	0.000	0.01
13	1	12 - 13	2035	3	0.00003	0.0020	0.0028	0.001	0.0003	0.00002	0.001	13	1	0.0001	0.00003	0.000003	0.0001	0.000006	0.008	0.000	0.01
14	1	13 - 14	2036	3	0.00003	0.0020	0.0028	0.001	0.0003	0.00002	0.001	14	1	0.0001	0.00003	0.000003	0.0001	0.000006	0.008	0.000	0.01
15	1	14 - 15	2037	3	0.00003	0.0020	0.0028	0.001	0.0003	0.00002	0.001	15	1	0.0001	0.00003	0.000003	0.0001	0.000006	0.008	0.000	0.01
16	1	15 - 16	2038	3	0.00003	0.0020	0.0028	0.001	0.0003	0.00002	0.001	16	1	0.0001	0.00003	0.000003	0.0001	0.000006	0.008	0.000	0.01
17	1	16-17	2039	1	0.00003	0.0020	0.0028	0.0001	0.00003	0.000003	0.0001	17	1	0.0001	0.00003	0.000003	0.0001	0.000006	0.008	0.000	0.01
18	1	17-18	2040	1	0.00003	0.0020	0.0028	0.0001	0.00003	0.000003	0.0001	18	1	0.0001	0.00003	0.000003	0.0001	0.000006	0.008	0.000	0.01
19	1	18-19	2041	1	0.00003	0.0020	0.0028	0.0001	0.00003	0.000003	0.0001	19	1	0.0001	0.00003	0.000003	0.0001	0.000006	0.008	0.000	0.01
20	1	19-20	2042	1	0.00003	0.0020	0.0028	0.0001	0.00003	0.000003	0.0001	20	1	0.0001	0.00003	0.000003	0.0001	0.000006	0.008	0.000	0.01
21	1	20-21	2043	1	0.00003	0.0020	0.0028	0.0001	0.00003	0.000003	0.0001	21	1	0.0001	0.00003	0.000003	0.0001	0.000006	0.008	0.000	0.01
22	1	21-22	2044	1	0.00003	0.0020	0.0028	0.0001	0.00003	0.000003	0.0001	22	1	0.0001	0.00003	0.000003	0.0001	0.000006	0.008	0.000	0.01
23	1	22-23	2045	1	0.00003	0.0020	0.0028	0.0001	0.00003	0.000003	0.0001	23	1	0.0001	0.00003	0.000003	0.0001	0.000006	0.008	0.000	0.01
24	1	23-24	2046	1	0.00003	0.0020	0.0028	0.0001	0.00003	0.000003	0.0001	24	1	0.0001	0.00003	0.000003	0.0001	0.000006	0.008	0.000	0.01
25	1	24-25	2047	1	0.00003	0.0020	0.0028	0.0001	0.00003	0.000003	0.0001	25	1	0.0001	0.00003	0.000003	0.0001	0.000006	0.008	0.000	0.01
26	1	25-26	2048	1	0.00003	0.0020	0.0028	0.0001	0.00003	0.000003	0.0001	26	1	0.0001	0.00003	0.000003	0.0001	0.000006	0.008	0.000	0.01
27	1	26-27	2049	1	0.00003	0.0020	0.0028	0.0001	0.00003	0.000003	0.0001	27	1	0.0001	0.00003	0.000003	0.0001	0.000006	0.008	0.000	0.01
28	1	27-28	2050	1	0.00003	0.0020	0.0028	0.0001	0.00003	0.000003	0.0001	28	1	0.0001	0.00003	0.000003	0.0001	0.000006	0.008	0.000	0.01
29	1	28-29	2051	1	0.00003	0.0020	0.0028	0.0001	0.00003	0.000003	0.0001	29	1	0.0001	0.00003	0.000003	0.0001	0.000006	0.008	0.000	0.01
30	1	29-30	2052	1	0.00003	0.0020	0.0028	0.0001	0.00003	0.000003	0.0001	30	1	0.0001	0.00003	0.000003	0.0001	0.000006	0.008	0.000	0.01
							Total Increased Cancer Risk	**70.23**	**0.005**	**0.0004**	**70.23**			**Total Increased Adult Risk**	**1.19**	**0.0009**	**0.0001**	**1.19**				

* Third trimester of pregnancy

Milpitas Blvd. Bridge Project, Milpitas - Total Project Impacts - With AQ-1 and AQ-2 Mitigation
DPM Cancer Risk and PM2.5 Calculations
Impacts at Off-Site Multi-Family Homes - 7.6 meter receptor height

Cancer Risk (per million) = CPF x Inhalation Dose x ASF x ED/AT x FAH x 1.0E6

Where: CPF = Cancer potency factor $(mg/kg\text{-}day)^{-1}$
ASF = Age sensitivity factor for specified age group
ED = Exposure duration (years)
AT = Averaging time for lifetime cancer risk (years)
FAH = Fraction of time spent at home (unitless)

Inhalation Dose = C_{air} x DBR x A x (EF/365) x 10^{-6}

Where: C_{air} = concentration in air ($\mu g/m^3$)
DBR = daily breathing rate (L/kg body weight-day)
A = Inhalation absorption factor
EF = Exposure frequency (days/year)
10^{-6} = Conversion factor

Values

	Infant/Child			Adult
Age --> Parameter	**3rd Trimester**	**0 - 2**	**2 - 16**	**16 - 30**
ASF =	10	10	3	1
DPM CPF =	1.10E+00	1.10E+00	1.10E+00	1.10E+00
TOG Exhaust CPF =	6.28E-03	6.28E-03	6.28E-03	6.28E-03
TOG Evaporative CPF =	3.70E-04	3.70E-04	3.70E-04	3.70E-04
DBR* =	361	1090	572	261
A =	1	1	1	1
EF =	350	350	350	350
AT =	70	70	70	70
FAH =	1.00	1.00	1.00	0.73

* 95th percentile breathing rates for infants and 80th percentile for children and adults

Project Cancer Risk by Year - MEI Receptor Location

Infant/Child Exposure Information					TAC Concentrations (ug/m3)			DPM	Exhaust TOG	Evaporative TOG	TOTAL	Adult Exposure Only										
Exposure Year	Exposure Duration (years)	Age	Year	Age Sensitivity Factor	DPM	Exhaust TOG	Evaporative TOG	Cancer Risk (per million)	Cancer Risk (per million)	Cancer Risk (per million)	Cancer Risk (per million)	Exposure Year	Age Sensitivity Factor	DPM Cancer Risk (per million)	Exhaust TOG Cancer Risk (per million)	Evaporative TOG Cancer Risk (per million)	TOTAL Cancer Risk (per million)	HI	Maximum Fugitive PM2.5	Maximum Exhaust PM2.5	Total PM2.5
0	0.25	-0.25 - 0*	2023	10	0.0172	0.00	0.00	0.23	0.00	0.00	0.23	0									
1	1	0 - 1	2023	10	0.0172	0.00	0.00	2.82	0.00	0.00	2.82	1	1	0.0493	0.00	0.00	0.05	0.003	0.0396	0.0000	0.06
2	1	1 - 2	2024	10	0.0242	0.00	0.00	3.97	0.00	0.00	3.97	2	1	0.0693	0.00	0.00	0.07	0.005	0.0608	0.0000	0.08
3	1	2 - 3	2025	3	0.00003	0.0020	0.0028	0.001	0.0003	0.00002	0.001	3	1	0.0001	0.00003	0.000003	0.0001	0.000006	0.008	0.0002	0.01
4	1	3 - 4	2026	3	0.00003	0.0020	0.0028	0.001	0.0003	0.00002	0.001	4	1	0.0001	0.00003	0.000003	0.0001	0.000006	0.008	0.0002	0.01
5	1	4 - 5	2027	3	0.00003	0.0020	0.0028	0.001	0.0003	0.00002	0.001	5	1	0.0001	0.00003	0.000003	0.0001	0.000006	0.008	0.000	0.01
6	1	5 - 6	2028	3	0.00003	0.0020	0.0028	0.001	0.0003	0.00002	0.001	6	1	0.0001	0.00003	0.000003	0.0001	0.000006	0.008	0.000	0.01
7	1	6 - 7	2029	3	0.00003	0.0020	0.0028	0.001	0.0003	0.00002	0.001	7	1	0.0001	0.00003	0.000003	0.0001	0.000006	0.008	0.000	0.01
8	1	7 - 8	2030	3	0.00003	0.0020	0.0028	0.001	0.0003	0.00002	0.001	8	1	0.0001	0.00003	0.000003	0.0001	0.000006	0.008	0.000	0.01
9	1	8 - 9	2031	3	0.00003	0.0020	0.0028	0.001	0.0003	0.00002	0.001	9	1	0.0001	0.00003	0.000003	0.0001	0.000006	0.008	0.000	0.01
10	1	9 - 10	2032	3	0.00003	0.0020	0.0028	0.001	0.0003	0.00002	0.001	10	1	0.0001	0.00003	0.000003	0.0001	0.000006	0.008	0.000	0.01
11	1	10 - 11	2033	3	0.00003	0.0020	0.0028	0.001	0.0003	0.00002	0.001	11	1	0.0001	0.00003	0.000003	0.0001	0.000006	0.008	0.000	0.01
12	1	11 - 12	2034	3	0.00003	0.0020	0.0028	0.001	0.0003	0.00002	0.001	12	1	0.0001	0.00003	0.000003	0.0001	0.000006	0.008	0.000	0.01
13	1	12 - 13	2035	3	0.00003	0.0020	0.0028	0.001	0.0003	0.00002	0.001	13	1	0.0001	0.00003	0.000003	0.0001	0.000006	0.008	0.000	0.01
14	1	13 - 14	2036	3	0.00003	0.0020	0.0028	0.001	0.0003	0.00002	0.001	14	1	0.0001	0.00003	0.000003	0.0001	0.000006	0.008	0.000	0.01
15	1	14 - 15	2037	3	0.00003	0.0020	0.0028	0.001	0.0003	0.00002	0.001	15	1	0.0001	0.00003	0.000003	0.0001	0.000006	0.008	0.000	0.01
16	1	15 - 16	2038	3	0.00003	0.0020	0.0028	0.001	0.0003	0.00002	0.001	16	1	0.0001	0.00003	0.000003	0.0001	0.000006	0.008	0.000	0.01
17	1	16-17	2039	1	0.00003	0.0020	0.0028	0.0001	0.00003	0.000003	0.0001	17	1	0.0001	0.00003	0.000003	0.0001	0.000006	0.008	0.000	0.01
18	1	17-18	2040	1	0.00003	0.0020	0.0028	0.0001	0.00003	0.000003	0.0001	18	1	0.0001	0.00003	0.000003	0.0001	0.000006	0.008	0.000	0.01
19	1	18-19	2041	1	0.00003	0.0020	0.0028	0.0001	0.00003	0.000003	0.0001	19	1	0.0001	0.00003	0.000003	0.0001	0.000006	0.008	0.000	0.01
20	1	19-20	2042	1	0.00003	0.0020	0.0028	0.0001	0.00003	0.000003	0.0001	20	1	0.0001	0.00003	0.000003	0.0001	0.000006	0.008	0.000	0.01
21	1	20-21	2043	1	0.00003	0.0020	0.0028	0.0001	0.00003	0.000003	0.0001	21	1	0.0001	0.00003	0.000003	0.0001	0.000006	0.008	0.000	0.01
22	1	21-22	2044	1	0.00003	0.0020	0.0028	0.0001	0.00003	0.000003	0.0001	22	1	0.0001	0.00003	0.000003	0.0001	0.000006	0.008	0.000	0.01
23	1	22-23	2045	1	0.00003	0.0020	0.0028	0.0001	0.00003	0.000003	0.0001	23	1	0.0001	0.00003	0.000003	0.0001	0.000006	0.008	0.000	0.01
24	1	23-24	2046	1	0.00003	0.0020	0.0028	0.0001	0.00003	0.000003	0.0001	24	1	0.0001	0.00003	0.000003	0.0001	0.000006	0.008	0.000	0.01
25	1	24-25	2047	1	0.00003	0.0020	0.0028	0.0001	0.00003	0.000003	0.0001	25	1	0.0001	0.00003	0.000003	0.0001	0.000006	0.008	0.000	0.01
26	1	25-26	2048	1	0.00003	0.0020	0.0028	0.0001	0.00003	0.000003	0.0001	26	1	0.0001	0.00003	0.000003	0.0001	0.000006	0.008	0.000	0.01
27	1	26-27	2049	1	0.00003	0.0020	0.0028	0.0001	0.00003	0.000003	0.0001	27	1	0.0001	0.00003	0.000003	0.0001	0.000006	0.008	0.000	0.01
28	1	27-28	2050	1	0.00003	0.0020	0.0028	0.0001	0.00003	0.000003	0.0001	28	1	0.0001	0.00003	0.000003	0.0001	0.000006	0.008	0.000	0.01
29	1	28-29	2051	1	0.00003	0.0020	0.0028	0.0001	0.00003	0.000003	0.0001	29	1	0.0001	0.00003	0.000003	0.0001	0.000006	0.008	0.000	0.01
30	1	29-30	2052	1	0.00003	0.0020	0.0028	0.0001	0.00003	0.000003	0.0001	30	1	0.0001	0.00003	0.000003	0.0001	0.000006	0.008	0.000	0.01
							Total Increased Cancer Risk	**7.03**	**0.0046**	**0.0004**	**7.04**	**Total Increased Adult Risk**		**0.12**	**0.0009**	**0.00008**	**0.12**				

* Third trimester of pregnancy

Attachment 5: Major Roadway and Stationary Source TAC Emissions.

File Name:
EMFAC2021/CT-EMFAC2017:
Run Date: 10/21/2021 11:01
Area: Santa Clara (SF)
Analysis Year: 2024
Season: Annual

==========

Vehicle Category	VMT Fraction Across Category	Diesel VMT Within Cat	Gas VMT Fraction Within Category
Truck 1	0.029	0.495	0.505
Truck 2	0.017	0.937	0.048
Non-Truck	0.954	0.014	0.955

==========

Road Type: Major/Collector
Silt Loading Factor: CARB 0.032 g/m2
Precipitation Correction: CARB P = 64 days N = 365 days

==========

Fleet Average Running Exhaust Emission Factors (grams/veh-mile)

Pollutant Name	<= 5 mph	10 mph	15 mph	20 mph	25 mph	30 mph	35 mph	40 mph	45 mph	50 mph	55 mph	60 mph	65 mph	70 mph	75 mph
PM2.5	0.010064905	0.006724	0.004658	0.003383	0.002594	0.002091	0.001772	0.001585	0.0015	0	0	0	0	0	0
PM10	0.010860599	0.007244	0.005012	0.003636	0.002785	0.002244	0.0019	0.001698	0.001606	0	0	0	0	0	0
NOx	0.296868257	0.237706	0.185236	0.157127	0.136389	0.120487	0.108482	0.10014	0.095313	0	0	0	0	0	0
CO															
HC															
TOG	0.150963635	0.097999	0.066066	0.046959	0.035418	0.028086	0.023335	0.020317	0.018555	0	0	0	0	0	0
ROG	0.110165562	0.071807	0.048458	0.034482	0.026074	0.020722	0.0019	0.001698	0.001606	0	0	0	0	0	0
1,3-Butadiene															
Acetaldehyde															
Acrolein															
Benzene															
Diesel PM	0.001251732	0.001032	0.000815	0.000657	0.000562	0.000509	0.000485	0.000488	0.000514	0	0	0	0	0	0
Ethylbenzene															
Formaldehyde															
Naphthalene															
POM															
DEOG	0.01394394	0.01005	0.00541	0.002737	0.001898	0.0015	0.001234	0.001057	0.000946	0	0	0	0	0	0
CO2	793.1583307	648.1291	530.7661	443.9999	381.1293	339.0136	313.8292	302.335	301.4587	0	0	0	0	0	0
N2O	0.019918404	0.016886	0.01377	0.012097	0.010929	0.010153	0.009721	0.009429	0.009275	0	0	0	0	0	0
CH4	0.021135015	0.014346	0.010151	0.00752	0.005838	0.004739	0.004019	0.003561	0.003297	0	0	0	0	0	0
BC															

Fleet Average Fuel Consumption (gallons/veh-mile)

Fuel Type	<= 5 mph	10 mph	15 mph	20 mph	25 mph	30 mph	35 mph	40 mph	45 mph	50 mph	55 mph	60 mph	65 mph	70 mph	75 mph
Gasoline	0.074234	0.060034	0.049124	0.040865	0.034934	0.031008	0.028719	0.027786	0.027897	0.028696	0.029898	0.031	0.031925	0.031925	0.031925
Diesel	0.007686	0.006432	0.004914	0.004206	0.003682	0.003262	0.002995	0.002791	0.002666	0.002665	0.002747	0.00288	0.003095	0.003095	0.003095

==========

Fleet Average Running Loss Emission Factors (grams/veh-hour)

Pollutant Name	Emission Factor
HC	
TOG	1.173452831
ROG	1.173452831
1,3-Butadiene	
Benzene	
Ethylbenzene	
Naphthalene	
CH4	0.175260502
HFC	0.016012165

==========

Fleet Average Tire Wear Factors (grams/veh-mile)

Pollutant Name	
PM2.5	0.002050376
PM10	0.008201504

==========

Fleet Average Brake Wear Factors (grams/veh-mile)

Pollutant Name	<= 5 mph	10 mph	15 mph	20 mph	25 mph	30 mph	35 mph	40 mph	45 mph	50 mph	55 mph	60 mph	65 mph	70 mph	75 mph
PM2.5	0.003917109	0.004454	0.004983	0.005505	0.00578	0.005867	0.005892	0.005395	0.004344	0	0	0	0	0	0
PM10	0.011191739	0.012725	0.014237	0.015728	0.016514	0.016763	0.016835	0.015414	0.012412	0	0	0	0	0	0

==========

Fleet Average Road Dust Factors (grams/veh-mile)

Pollutant Name	Emission Factor
PM2.5	0.014777
PM10	0.098515

==========END==========

Road Link	Description	Direction	No. Lanes	Link Length (miles)	Link Width (ft)	Link Width (m)	Release Height (ft)	Release Height (m)	Initial Vertical Dimention (m)	Initial Vertical Dispersion (m)	Average Speed (mph)	Average Vehicles per Day
DPM_MonPkw	DPM from Montague Parkway	Both	6	0.45	87	26.52	11.15	3.4	6.8	3.16	45 mph off Peak, 40 mph AM and PM peak	33,000
XXX_MonPkw	XXX from Montague Parkway	Both	6	0.45	87	26.52	4.27	1.3	2.79	1.33	45 mph off Peak, 40 mph AM and PM peak	33,000
DPM_NW_Cap	DPM from E. Capitol NW of Milpitas Blvd.	Both	6	0.20	140	42.67	11.15	3.4	6.80	3.16	40 mph off Peak, 35 mph AM and PM peak	20,100
XXX_NW_Cap	XXX from E. Capitol NW of Milpitas Blvd.	Both	6	0.20	140	42.67	4.27	1.3	2.79	1.30	40 mph off Peak, 35 mph AM and PM peak	20,100
DPM_SE_Cap	DPM from E. Capitol SE of Milpitas Blvd.	Both	5	0.22	96	29.26	11.15	3.4	6.8	3.16	40 mph off Peak, 35 mph AM and PM peak	12,000
XXX_SE_Cap	XXX from the new roadway east of the Crossing	Both	5	0.22	96	29.26	4.27	1.3	2.79	1.33	40 mph off Peak, 35 mph AM and PM peak	12,000

Emission Factors

	Speed Category	1	2	3
	Travel Speed (mph)	35	40	45
Emisions per vehicle (g/VMT)	DPM	0.0004854	0.0004881	0.000514
	PM2.5	0.0017723	0.0015847	0.001500
	TOG Exhaust	0.022101	0.0192595	0.017609
	TOG Evap	0.0335272	0.0293363	0.026077
	Fugitive PM2.5	0.0227195	0.02222	0.02117

			Montague Parkway	**Capitol NW of Milpitas Blvd.**	**Capitol SE of Milpitas**	**XXX**	**XXX**	**XXX**
Vehicle Type	Truck 1 (MDT)		957	583	348	0	0	
	Truck 2 (HDT)		561	342	204	0	0	
	Non-Truck		31,482	19,175	11,448	0	0	
Total	2024 ADT	-	33,000	20,100	12,000			

2024 Hourly Traffic Volumes and DPM Emisssions - DPM from Montague Parkway

Hour	Fraction Per Hour	VPH	g/s	Hour	Fraction Per Hour	VPH	g/s	Hour	Fraction Per Hour	VPH	g/s
0	0.01085042	358	0.0000232	8	0.0643577	2124	1.3048E-04	16	0.05801478	1914	0.000123914
1	0.00740349	244	1.58131E-05	9	0.0598818	1976	0.000127902	17	0.05628001	1857	0.000120209
2	0.00719554	237	1.5369E-05	10	0.0540699	1784	0.000115488	18	0.05397567	1781	0.000115287
3	0.0090397	298	1.93079E-05	11	0.0511832	1689	0.000109322	19	0.04834712	1595	0.000103265
4	0.01740988	575	3.71858E-05	12	0.0526533	1738	0.000112462	20	0.03893556	1285	8.31626E-05
5	0.03764755	1242	8.04115E-05	13	0.0561328	1852	0.000119894	21	0.03342021	1103	7.13823E-05
6	0.05280664	1743	0.00011279	14	0.061969	2045	0.000125635	22	0.02602722	859	5.55916E-05
7	0.06314643	2084	0.000128022	15	0.0606367	2001	0.000122934	23	0.0186155	614	3.97609E-05
									TOTAL	33,000	

2024 Hourly Traffic Volumes and DPM Emisssions - DPM from E. Capitol NW of Milpitas Blvd.

Hour	Fraction Per Hour	VPH	g/s	Hour	Fraction Per Hour	VPH	g/s	Hour	Fraction Per Hour	VPH	g/s
0	0.01085042	218	0.00000585	8	0.0643577	1294	3.45048E-05	16	0.05801478	1166	3.12762E-05
1	0.00740349	149	3.99128E-06	9	0.0598818	1204	3.22828E-05	17	0.05628001	1131	3.0341E-05
2	0.00719554	145	3.87918E-06	10	0.0540699	1087	2.91495E-05	18	0.05397567	1085	2.90987E-05
3	0.0090397	182	4.87338E-06	11	0.0511832	1029	2.75933E-05	19	0.04834712	972	2.60643E-05
4	0.01740988	350	9.38581E-06	12	0.0526533	1058	2.83858E-05	20	0.03893556	783	2.09905E-05
5	0.03764755	757	2.02961E-05	13	0.0561328	1128	3.02616E-05	21	0.03342021	672	1.80171E-05
6	0.05280664	1061	2.84685E-05	14	0.061969	1246	3.32241E-05	22	0.02602722	523	1.40315E-05
7	0.06314643	1269	3.38554E-05	15	0.0606367	1219	3.25098E-05	23	0.0186155	374	1.00358E-05
									TOTAL	20,100	

2024 Hourly Traffic Volumes and DPM Emisssions - DPM from E. Capitol SE of Milpitas Blvd.

Hour	Fraction Per Hour	VPH	g/s	Hour	Fraction Per Hour	VPH	g/s	Hour	Fraction Per Hour	VPH	g/s
0	0.01085042	130	0.00000394	8	0.0643577	772	2.32401E-05	16	0.05801478	696	2.10656E-05
1	0.00740349	89	2.68826E-06	9	0.0598818	719	2.17435E-05	17	0.05628001	675	2.04357E-05
2	0.00719554	86	2.61275E-06	10	0.0540699	649	1.96331E-05	18	0.05397567	648	1.95989E-05
3	0.0090397	108	3.28238E-06	11	0.0511832	614	1.8585E-05	19	0.04834712	580	1.75552E-05
4	0.01740988	209	6.32165E-06	12	0.0526533	632	1.91188E-05	20	0.03893556	467	1.41378E-05
5	0.03764755	452	1.36701E-05	13	0.0561328	674	2.03822E-05	21	0.03342021	401	1.21351E-05
6	0.05280664	634	1.91744E-05	14	0.061969	744	2.23775E-05	22	0.02602722	312	9.45066E-06
7	0.06314643	758	2.28027E-05	15	0.0606367	728	2.18964E-05	23	0.0186155	223	6.75941E-06
									TOTAL	12,000	

2024 Hourly Traffic Volumes and Fugitive PM2.5 Emis XXX from Montague Parkway

Hour	Fraction Per Hour	VPH	g/s	Hour	Fraction Per Hour	VPH	g/s	Hour	Fraction Per Hour	VPH	g/s
0	0.01085042	358	0.000954	8	0.0643577	2124	0.005940955	16	0.05801478	1914	0.005102237
1	0.00740349	244	0.0006511	9	0.0598818	1976	0.005266436	17	0.05628001	1857	0.004949669
2	0.00719554	237	0.0006328	10	0.0540699	1784	0.004755296	18	0.05397567	1781	0.004747009
3	0.0090397	298	0.000795	11	0.0511832	1689	0.00450142	19	0.04834712	1595	0.004251994
4	0.01740988	575	0.0015312	12	0.0526533	1738	0.004630709	20	0.03893556	1285	0.003424273
5	0.03764755	1242	0.003311	13	0.0561328	1852	0.00493672	21	0.03342021	1103	0.002939214
6	0.05280664	1743	0.0046442	14	0.061969	2045	0.005720452	22	0.02602722	859	0.002289021
7	0.06314643	2084	0.0058291	15	0.0606367	2001	0.005597462	23	0.0186155	614	0.001637181
									TOTAL	33,000	

2024 Hourly Traffic Volumes and Fugitive PM2.5 Emis XXX from E. Capitol NW of Milpitas Blvd.

Hour	Fraction Per Hour	VPH	g/s	Hour	Fraction Per Hour	VPH	g/s	Hour	Fraction Per Hour	VPH	g/s
0	0.01085042	218	0.000266	8	0.0643577	1294	0.001615129	16	0.05801478	1166	0.001424077
1	0.00740349	149	0.0001817	9	0.0598818	1204	0.001469906	17	0.05628001	1131	0.001381494
2	0.00719554	145	0.0001766	10	0.0540699	1087	0.001327242	18	0.05397567	1085	0.001324929
3	0.0090397	182	0.0002219	11	0.0511832	1029	0.001256384	19	0.04834712	972	0.001186767
4	0.01740988	350	0.0004274	12	0.0526533	1058	0.001292469	20	0.03893556	783	0.000955743
5	0.03764755	757	0.0009241	13	0.0561328	1128	0.001377879	21	0.03342021	672	0.000820359
6	0.05280664	1061	0.0012962	14	0.061969	1246	0.001555182	22	0.02602722	523	0.000638885
7	0.06314643	1269	0.0015847	15	0.0606367	1219	0.001521746	23	0.0186155	374	0.000456951
									TOTAL	20,100	

2024 Hourly Traffic Volumes and Fugitive PM2.5 Emis XXX from the new roadway east of the Crossing

Hour	Fraction Per Hour	VPH	g/s	Hour	Fraction Per Hour	VPH	g/s	Hour	Fraction Per Hour	VPH	g/s
0	0.01085042	130	0.000179	8	0.0643577	772	0.001087841	16	0.05801478	696	0.000959162
1	0.00740349	89	0.0001224	9	0.0598818	719	0.000990029	17	0.05628001	675	0.000930481
2	0.00719554	86	0.000119	10	0.0540699	649	0.000893941	18	0.05397567	648	0.000892383
3	0.0090397	108	0.0001495	11	0.0511832	614	0.000846215	19	0.04834712	580	0.000799326
4	0.01740988	209	0.0002878	12	0.0526533	632	0.00087052	20	0.03893556	467	0.000643724
5	0.03764755	452	0.0006224	13	0.0561328	674	0.000928046	21	0.03342021	401	0.000552538
6	0.05280664	634	0.0008731	14	0.061969	744	0.001047465	22	0.02602722	312	0.000430309
7	0.06314643	758	0.0010674	15	0.0606367	728	0.001024945	23	0.0186155	223	0.000307771
									TOTAL	12,000	

2024 Hourly Traffic Volumes and PM2.5 Emisssions - XXX from Montague Parkway

Hour	Fraction Per Hour	VPH	g/s	Hour	Fraction Per Hour	VPH	g/s	Hour	Fraction Per Hour	VPH	g/s
0	0.01085042	358	0.0000676	8	0.0643577	2124	0.00042367	16	0.05801478	1914	0.000361393
1	0.00740349	244	4.61187E-05	9	0.0598818	1976	0.000373023	17	0.05628001	1857	0.000350586
2	0.00719554	237	4.48234E-05	10	0.0540699	1784	0.000336819	18	0.05397567	1781	0.000336232
3	0.0090397	298	5.63112E-05	11	0.0511832	1689	0.000318837	19	0.04834712	1595	0.00030117
4	0.01740988	575	0.000108452	12	0.0526533	1738	0.000327994	20	0.03893556	1285	0.000242542
5	0.03764755	1242	0.000234519	13	0.0561328	1852	0.000349669	21	0.03342021	1103	0.000208185
6	0.05280664	1743	0.00032895	14	0.061969	2045	0.000407945	22	0.02602722	859	0.000162132
7	0.06314643	2084	0.000415696	15	0.0606367	2001	0.000399174	23	0.0186155	614	0.000115962
									TOTAL	33,000	

2024 Hourly Traffic Volumes and PM2.5 Emisssions - XXX from E. Capitol NW of Milpitas Blvd.

Hour	Fraction Per Hour	VPH	g/s	Hour	Fraction Per Hour	VPH	g/s	Hour	Fraction Per Hour	VPH	g/s
0	0.01085042	218	0.0000190	8	0.0643577	1294	0.000125992	16	0.05801478	1166	0.000101556
1	0.00740349	149	1.29599E-05	9	0.0598818	1204	0.000104824	17	0.05628001	1131	9.8519E-05
2	0.00719554	145	1.25959E-05	10	0.0540699	1087	9.46502E-05	18	0.05397567	1085	9.44853E-05
3	0.0090397	182	1.58241E-05	11	0.0511832	1029	8.9597E-05	19	0.04834712	972	8.46324E-05
4	0.01740988	350	3.04763E-05	12	0.0526533	1058	9.21704E-05	20	0.03893556	783	6.81573E-05
5	0.03764755	757	6.59026E-05	13	0.0561328	1128	9.82613E-05	21	0.03342021	672	5.85026E-05
6	0.05280664	1061	9.24389E-05	14	0.061969	1246	0.000121316	22	0.02602722	523	4.55611E-05
7	0.06314643	1269	0.000123621	15	0.0606367	1219	0.000118708	23	0.0186155	374	3.25867E-05
									TOTAL	20,100	

2024 Hourly Traffic Volumes and PM2.5 Emisssions - XXX from the new roadway east of the Crossing

Hour	Fraction Per Hour	VPH	g/s	Hour	Fraction Per Hour	VPH	g/s	Hour	Fraction Per Hour	VPH	g/s
0	0.01085042	130	0.0000128	8	0.0643577	772	8.48598E-05	16	0.05801478	696	6.84011E-05
1	0.00740349	89	8.72893E-06	9	0.0598818	719	7.06024E-05	17	0.05628001	675	6.63558E-05
2	0.00719554	86	8.48376E-06	10	0.0540699	649	6.375E-05	18	0.05397567	648	6.36389E-05
3	0.0090397	108	1.06581E-05	11	0.0511832	614	6.03465E-05	19	0.04834712	580	5.70027E-05
4	0.01740988	209	2.05268E-05	12	0.0526533	632	6.20797E-05	20	0.03893556	467	4.59062E-05
5	0.03764755	452	4.43876E-05	13	0.0561328	674	6.61822E-05	21	0.03342021	401	3.94034E-05
6	0.05280664	634	6.22606E-05	14	0.061969	744	8.17102E-05	22	0.02602722	312	3.06868E-05
7	0.06314643	758	8.32627E-05	15	0.0606367	728	7.99534E-05	23	0.0186155	223	2.19482E-05
									TOTAL	12,000	

2024 Hourly Traffic Volumes and TOG Evaporative Emisssions - XXX from Montague Parkway

Hour	Fraction Per Hour	VPH	g/s	Hour	Fraction Per Hour	VPH	g/s	Hour	Fraction Per Hour	VPH	g/s
0	0.01085042	358	0.001175	8	0.0643577	2124	0.007842866	16	0.05801478	1914	0.006284352
1	0.00740349	244	0.000802	9	0.0598818	1976	0.006486594	17	0.05628001	1857	0.006096436
2	0.00719554	237	0.0007794	10	0.0540699	1784	0.00585703	18	0.05397567	1781	0.005846822
3	0.0090397	298	0.0009792	11	0.0511832	1689	0.005544334	19	0.04834712	1595	0.00523712
4	0.01740988	575	0.0018859	12	0.0526533	1738	0.005703577	20	0.03893556	1285	0.004217628
5	0.03764755	1242	0.0040781	13	0.0561328	1852	0.006080487	21	0.03342021	1103	0.003620187
6	0.05280664	1743	0.0057202	14	0.061969	2045	0.007551772	22	0.02602722	859	0.002819354
7	0.06314643	2084	0.0076953	15	0.0606367	2001	0.00738941	23	0.0186155	614	0.002016492
									TOTAL	33,000	

2024 Hourly Traffic Volumes and TOG Evaporative Emisssions - XXX from E. Capitol NW of Milpitas Blvd.

Hour	Fraction Per Hour	VPH	g/s	Hour	Fraction Per Hour	VPH	g/s	Hour	Fraction Per Hour	VPH	g/s
0	0.01085042	218	0.000352	8	0.0643577	1294	0.002383448	16	0.05801478	1166	0.001879974
1	0.00740349	149	0.0002399	9	0.0598818	1204	0.001940475	17	0.05628001	1131	0.001823759
2	0.00719554	145	0.0002332	10	0.0540699	1087	0.00175214	18	0.05397567	1085	0.001749087
3	0.0090397	182	0.0002929	11	0.0511832	1029	0.001658597	19	0.04834712	972	0.001566693
4	0.01740988	350	0.0005642	12	0.0526533	1058	0.001706235	20	0.03893556	783	0.001261711
5	0.03764755	757	0.00122	13	0.0561328	1128	0.001818988	21	0.03342021	672	0.001082985
6	0.05280664	1061	0.0017112	14	0.061969	1246	0.002294984	22	0.02602722	523	0.000843414
7	0.06314643	1269	0.0023386	15	0.0606367	1219	0.002245642	23	0.0186155	374	0.000603237
									TOTAL	20,100	

2024 Hourly Traffic Volumes and TOG Evaporative Emisssions - XXX from the new roadway east of the Crossing

Hour	Fraction Per Hour	VPH	g/s	Hour	Fraction Per Hour	VPH	g/s	Hour	Fraction Per Hour	VPH	g/s
0	0.01085042	130	0.000237	8	0.0643577	772	0.001605329	16	0.05801478	696	0.001266224
1	0.00740349	89	0.0001616	9	0.0598818	719	0.001306973	17	0.05628001	675	0.001228361
2	0.00719554	86	0.000157	10	0.0540699	649	0.001180123	18	0.05397567	648	0.001178066
3	0.0090397	108	0.0001973	11	0.0511832	614	0.001117119	19	0.04834712	580	0.001055219
4	0.01740988	209	0.00038	12	0.0526533	632	0.001149204	20	0.03893556	467	0.000849803
5	0.03764755	452	0.0008217	13	0.0561328	674	0.001225147	21	0.03342021	401	0.000729425
6	0.05280664	634	0.0011526	14	0.061969	744	0.001545746	22	0.02602722	312	0.000568067
7	0.06314643	758	0.0015751	15	0.0606367	728	0.001512513	23	0.0186155	223	0.0004063
									TOTAL	12,000	

2024 Hourly Traffic Volumes and TOG Exhaust Emisssi XXX from Montague Parkway

Hour	Fraction Per Hour	VPH	g/s	Hour	Fraction Per Hour	VPH	g/s	Hour	Fraction Per Hour	VPH	g/s
0	0.01085042	358	0.000794	8	0.0643577	2124	0.005148907	16	0.05801478	1914	0.004243688
1	0.00740349	244	0.0005416	9	0.0598818	1976	0.004380257	17	0.05628001	1857	0.004116792
2	0.00719554	237	0.0005263	10	0.0540699	1784	0.003955126	18	0.05397567	1781	0.003948233
3	0.0090397	298	0.0006612	11	0.0511832	1689	0.003743969	19	0.04834712	1595	0.003536515
4	0.01740988	575	0.0012735	12	0.0526533	1738	0.003851503	20	0.03893556	1285	0.002848074
5	0.03764755	1242	0.0027539	13	0.0561328	1852	0.004106022	21	0.03342021	1103	0.002444635
6	0.05280664	1743	0.0038627	14	0.061969	2045	0.004957802	22	0.02602722	859	0.001903849
7	0.06314643	2084	0.005052	15	0.0606367	2001	0.004851209	23	0.0186155	614	0.001361694
									TOTAL	33,000	

2024 Hourly Traffic Volumes and TOG Exhaust Emisssi XXX from E. Capitol NW of Milpitas Blvd.

Hour	Fraction Per Hour	VPH	g/s	Hour	Fraction Per Hour	VPH	g/s	Hour	Fraction Per Hour	VPH	g/s
0	0.01085042	218	0.000231	8	0.0643577	1294	0.001571158	16	0.05801478	1166	0.001234219
1	0.00740349	149	0.0001575	9	0.0598818	1204	0.001273938	17	0.05628001	1131	0.001197313
2	0.00719554	145	0.0001531	10	0.0540699	1087	0.001150295	18	0.05397567	1085	0.00114829
3	0.0090397	182	0.0001923	11	0.0511832	1029	0.001088883	19	0.04834712	972	0.001028547
4	0.01740988	350	0.0003704	12	0.0526533	1058	0.001120157	20	0.03893556	783	0.000828324
5	0.03764755	757	0.0008009	13	0.0561328	1128	0.001194181	21	0.03342021	672	0.000710989
6	0.05280664	1061	0.0011234	14	0.061969	1246	0.001318342	22	0.02602722	523	0.000553709
7	0.06314643	1269	0.0015416	15	0.0606367	1219	0.001289998	23	0.0186155	374	0.00039603
									TOTAL	20,100	

2024 Hourly Traffic Volumes and TOG Exhaust Emisssi XXX from the new roadway east of the Crossing

Hour	Fraction Per Hour	VPH	g/s	Hour	Fraction Per Hour	VPH	g/s	Hour	Fraction Per Hour	VPH	g/s
0	0.01085042	130	0.000155	8	0.0643577	772	0.001058226	16	0.05801478	696	0.000831286
1	0.00740349	89	0.0001061	9	0.0598818	719	0.000858039	17	0.05628001	675	0.000806429
2	0.00719554	86	0.0001031	10	0.0540699	649	0.000774761	18	0.05397567	648	0.00077341
3	0.0090397	108	0.0001295	11	0.0511832	614	0.000733398	19	0.04834712	580	0.00069276
4	0.01740988	209	0.0002495	12	0.0526533	632	0.000754462	20	0.03893556	467	0.000557903
5	0.03764755	452	0.0005394	13	0.0561328	674	0.000804319	21	0.03342021	401	0.000478874
6	0.05280664	634	0.0007567	14	0.061969	744	0.001018949	22	0.02602722	312	0.000372941
7	0.06314643	758	0.0010383	15	0.0606367	728	0.000997042	23	0.0186155	223	0.000266739
									TOTAL	12,000	

Stationary Source Risk & Hazards Screening Report

Area of Interest (AOI) Information

Area : 4,953,033.69 ft²

Oct 21 2021 14:06:33 Pacific Daylight Time

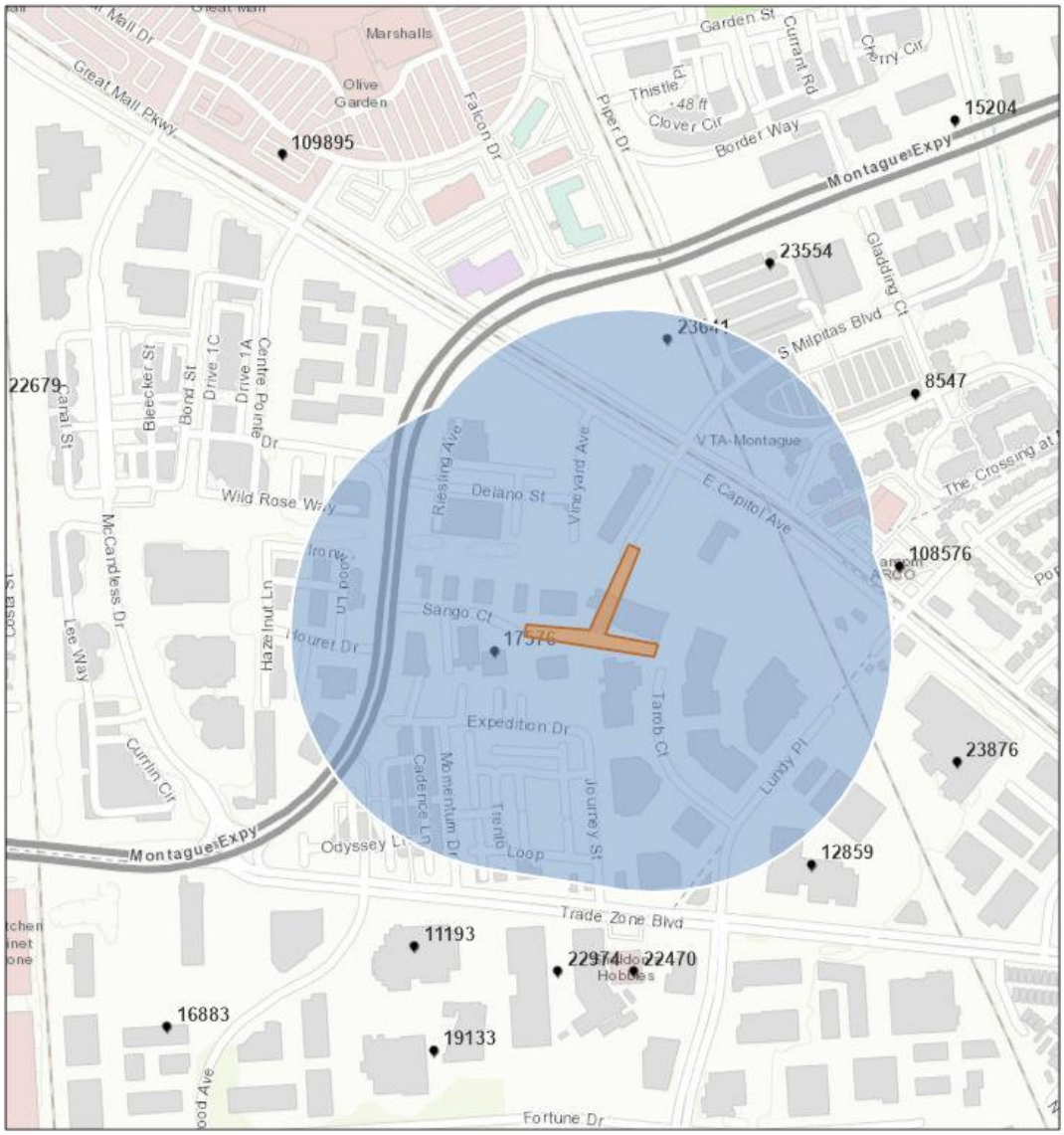

Permitted Facilities 2018

1:9,028

0 0.05 0.1 0.2 mi

0 0.07 0.15 0.3 km

City of San Jose, County of Santa Clara, Bureau of Land Management, Esri, HERE, Garmin, INCREMENT P, Intermap, USGS, METI/NASA, EPA, USDA

Summary

Name	Count	Area(ft²)	Length(ft)
Permitted Facilities 2018	2	N/A	N/A

Permitted Facilities 2018

#	FACID	Name	Address	City	St
1	17576	Olson Brothers Body Shop	328 Sango Ct	Milpitas	CA
2	23641	Santa Clara Valley Transportation	555 E Capitol Avenue	Milpitas	CA

#	Zip	County	Cancer	Hazard	PM_25	Type	Count
1	95035	Santa Clara	0.000	0.000	0.000	Contact BAAQMD	1
2	95035	Santa Clara	3.930	0.010	0.000	Generators	1

Note: The estimated risk and hazard impacts from these sources would be expected to be substantially lower when site specific Health Risk Screening Assessments are conducted.

The screening level map is not recommended for evaluating sensitive land uses such as schools, senior centers, day cares, and health facilities.

© Copyright 2018 Bay Area Air Quality Management District

Plant#	Plant Name	Address	City	St	Zip	County	UTM_E (km	UTM_N (kn	Cancer_20	Hazard_20	PM2.5_201	Type
17576	Olson Brotl	328 Sango	Milpitas	CA	95035	Santa Clara	597892.1	4140529		0.002		Auto Body Coating Operation
24653	BART	555 E Capit	Milpitas	CA	95035	Santa Clara	598112	4140935	3.9297	0.0139	0.0048	(1) Generator
25042	2334 LUND	2334 Lund	San Jose	CA	95131	Santa Clara	598307	4140258	9.38	0.02	0.01	(6) Generators
108576	ARCO Facili	2104 N Cap	San Jose	CA	95132	Santa Clara	598416.4	4140644	10.0044	0.044		Gas Dispensing Facility

Attachment 6: Cumulative Community Health Risk Impacts Calculations

Milpitas Blvd. Bridge Project , Milpitas , CA - Impacts from Roadways
AERMOD Risk Modeling Parameters at MEI
2nd Floor Receptors

Emissions Years	2024
Receptor Information	
Number of Receptors	
Receptor Height (in m) =	4.6 (2nd Floor)
Receptor Distances =	Nearby Residential Locations
Meteorological Conditions	
BAAQMD SJC Met Data	2013 - 2017
Land Use Classification	urban
Wind Speed =	variable
Wind Direction =	variable

Montague Expressway - Offsite Residential Concentration at MEI - Floor 2

	TAC Concentrations (µg/m^3)		
Analysis Years	**DPM**	**Exhaust TOG**	**Evaporative TOG**
2024	0.00067	0.02483	0.03689

	PM2.5 Concentrations (µg/m^3)		
Analysis Years	**Total PM2.5**	**Fugitive PM2.5**	**Vehicle PM2.5**
2024	0.03183	0.02972	0.00211

E. Capitol Avenue - Offsite Residential Concentration at MEI - Floor 2

	TAC Concentrations (µg/m^3)		
Analysis Years	**DPM**	**Exhaust TOG**	**Evaporative TOG**
2024	0.00014	0.00584	0.00892

	PM2.5 Concentrations (µg/m^3)		
Analysis Years	**Total PM2.5**	**Fugitive PM2.5**	**Vehicle PM2.5**
2024	0.00716	0.00668	0.00048

Milpitas Blvd. Bridge Project , Milpitas , CA - Impacts from Montague Expressway
Cancer Risk and PM2.5 Calculations at MEI
4.6 meter receptor height - Floor 2

Cancer Risk Calculation Method

Cancer Risk (per million) = CPF x Inhalation Dose x ASF x ED/AT x FAH x 1.0E6

Where: CPF = Cancer potency factor $(mg/kg\text{-}day)^{-1}$
ASF = Age sensitivity factor for specified age group
ED = Exposure duration (years)
AT = Averaging time for lifetime cancer risk (years)
FAH = Fraction of time spent at home (unitless)

Inhalation Dose = C_{air} x DBR x A x (EF/365) x 10^{-6}

Where: C_{air} = concentration in air ($\mu g/m^3$)
DBR = daily breathing rate (L/kg body weight-day)
A = Inhalation absorption factor
EF = Exposure frequency (days/year)
10^{-6} = Conversion factor

Cancer Potency Factors $(mg/kg\text{-}day)^{-1}$

TAC	CPF
DPM	1.10E+00
Vehicle TOG Exhaust	6.28E-03
Vehicle TOG Evaporative	3.70E-04

Values

	Infant/Child			Adult
Age -->	**3rd Trimester**	**0 - 2**	**2 - 16**	**16 - 30**
Parameter				
ASF =	10	10	3	1
DBR* =	361	1090	572	261
A =	1	1	1	1
EF =	350	350	350	350
AT =	70	70	70	70
FAH =	1.00	1.00	1.00	0.73

* 95th percentile breathing rates for infants and 80th percentile for children and adults

Cancer Risk by Year - MEI Receptor Location

Exposure Information					Concentration (ug/m3)			Cancer Risk (per million)			TOTAL
Exposure Year	Exposure Duration (years)	Age	Year	Age Sensitivity Factor	DPM	Exhaust TOG	Evaporative TOG	DPM	Exhaust TOG	Evaporative TOG	
0	0.25	-0.25 - 0*	2024	10	0.0007	0.0248	0.0369	0.009	0.002	0.0002	0.01
1	1	0 - 1	2024	10	0.0007	0.0248	0.0369	0.110	0.023	0.0020	0.14
2	1	1 - 2	2025	10	0.0007	0.0248	0.0369	0.110	0.023	0.0020	0.14
3	1	2 - 3	2026	3	0.0007	0.0248	0.0369	0.017	0.004	0.0003	0.02
4	1	3 - 4	2027	3	0.0007	0.0248	0.0369	0.017	0.004	0.0003	0.02
5	1	4 - 5	2028	3	0.0007	0.0248	0.0369	0.017	0.004	0.0003	0.02
6	1	5 - 6	2029	3	0.0007	0.0248	0.0369	0.017	0.004	0.0003	0.02
7	1	6 - 7	2030	3	0.0007	0.0248	0.0369	0.017	0.004	0.0003	0.02
8	1	7 - 8	2031	3	0.0007	0.0248	0.0369	0.017	0.004	0.0003	0.02
9	1	8 - 9	2032	3	0.0007	0.0248	0.0369	0.017	0.004	0.0003	0.02
10	1	9 - 10	2033	3	0.0007	0.0248	0.0369	0.017	0.004	0.0003	0.02
11	1	10 - 11	2034	3	0.0007	0.0248	0.0369	0.017	0.004	0.0003	0.02
12	1	11 - 12	2035	3	0.0007	0.0248	0.0369	0.017	0.004	0.0003	0.02
13	1	12 - 13	2036	3	0.0007	0.0248	0.0369	0.017	0.004	0.0003	0.02
14	1	13 - 14	2037	3	0.0007	0.0248	0.0369	0.017	0.004	0.0003	0.02
15	1	14 - 15	2038	3	0.0007	0.0248	0.0369	0.017	0.004	0.0003	0.02
16	1	15 - 16	2039	3	0.0007	0.0248	0.0369	0.017	0.004	0.0003	0.02
17	1	16-17	2040	1	0.0007	0.0248	0.0369	0.002	0.0004	0.00004	0.002
18	1	17-18	2041	1	0.0007	0.0248	0.0369	0.002	0.0004	0.00004	0.002
19	1	18-19	2042	1	0.0007	0.0248	0.0369	0.002	0.0004	0.00004	0.002
20	1	19-20	2043	1	0.0007	0.0248	0.0369	0.002	0.0004	0.00004	0.002
21	1	20-21	2044	1	0.0007	0.0248	0.0369	0.002	0.0004	0.00004	0.002
22	1	21-22	2045	1	0.0007	0.0248	0.0369	0.002	0.0004	0.00004	0.002
23	1	22-23	2046	1	0.0007	0.0248	0.0369	0.002	0.0004	0.00004	0.002
24	1	23-24	2047	1	0.0007	0.0248	0.0369	0.002	0.0004	0.00004	0.002
25	1	24-25	2048	1	0.0007	0.0248	0.0369	0.002	0.0004	0.00004	0.002
26	1	25-26	2049	1	0.0007	0.0248	0.0369	0.002	0.0004	0.00004	0.002
27	1	26-27	2050	1	0.0007	0.0248	0.0369	0.002	0.0004	0.00004	0.002
28	1	27-28	2051	1	0.0007	0.0248	0.0369	0.002	0.0004	0.00004	0.002
29	1	28-29	2052	1	0.0007	0.0248	0.0369	0.002	0.0004	0.00004	0.002
30	1	29-30	2053	1	0.0007	0.0248	0.0369	0.002	0.0004	0.00004	0.002
Total Increased Cancer Risk								0.50	0.106	0.009	**0.61**

Maximum	
Hazard Index	**Total PM2.5 (µg/m3)**
0.0001	0.032
0.0001	0.032
0.0001	0.032
0.0001	0.032

* Third trimester of pregnancy

Milpitas Blvd. Bridge Project , Milpitas , CA - Impacts from E. Capitol Avenue
Cancer Risk and PM2.5 Calculations at MEI
4.6 meter receptor height - Floor 2

Cancer Risk Calculation Method

Cancer Risk (per million) = CPF x Inhalation Dose x ASF x ED/AT x FAH x 1.0E6

Where: CPF = Cancer potency factor $(mg/kg\text{-}day)^{-1}$
ASF = Age sensitivity factor for specified age group
ED = Exposure duration (years)
AT = Averaging time for lifetime cancer risk (years)
FAH = Fraction of time spent at home (unitless)

Inhalation Dose = C_{air} x DBR x A x (EF/365) x 10^{-6}

Where: C_{air} = concentration in air ($\mu g/m^3$)
DBR = daily breathing rate (L/kg body weight-day)
A = Inhalation absorption factor
EF = Exposure frequency (days/year)
10^{-6} = Conversion factor

Cancer Potency Factors $(mg/kg\text{-}day)^{-1}$

TAC	CPF
DPM	1.10E+00
Vehicle TOG Exhaust	6.28E-03
Vehicle TOG Evaporative	3.70E-04

Values

	Infant/Child			Adult
Age -->	**3rd Trimester**	**0 - 2**	**2 - 16**	**16 - 30**
Parameter				
ASF =	10	10	3	1
DBR* =	361	1090	572	261
A =	1	1	1	1
EF =	350	350	350	350
AT =	70	70	70	70
FAH =	1.00	1.00	1.00	0.73

* 95th percentile breathing rates for infants and 80th percentile for children and adults

Cancer Risk by Year - MEI Receptor Location

Exposure Information					Concentration (ug/m3)			Cancer Risk (per million)			TOTAL
Exposure Year	Exposure Duration (years)	Age	Year	Age Sensitivity Factor	DPM	Exhaust TOG	Evaporative TOG	DPM	Exhaust TOG	Evaporative TOG	
0	0.25	-0.25 - 0*	2024	10	0.0001	0.0058	0.0089	0.002	0.000	0.0000	0.00
1	1	0 - 1	2024	10	0.0001	0.0058	0.0089	0.023	0.005	0.0005	0.03
2	1	1 - 2	2025	10	0.0001	0.0058	0.0089	0.023	0.005	0.0005	0.03
3	1	2 - 3	2026	3	0.0001	0.0058	0.0089	0.004	0.001	0.0001	0.005
4	1	3 - 4	2027	3	0.0001	0.0058	0.0089	0.004	0.001	0.0001	0.005
5	1	4 - 5	2028	3	0.0001	0.0058	0.0089	0.004	0.001	0.0001	0.005
6	1	5 - 6	2029	3	0.0001	0.0058	0.0089	0.004	0.001	0.0001	0.005
7	1	6 - 7	2030	3	0.0001	0.0058	0.0089	0.004	0.001	0.0001	0.005
8	1	7 - 8	2031	3	0.0001	0.0058	0.0089	0.004	0.001	0.0001	0.005
9	1	8 - 9	2032	3	0.0001	0.0058	0.0089	0.004	0.001	0.0001	0.005
10	1	9 - 10	2033	3	0.0001	0.0058	0.0089	0.004	0.001	0.0001	0.005
11	1	10 - 11	2034	3	0.0001	0.0058	0.0089	0.004	0.001	0.0001	0.005
12	1	11 - 12	2035	3	0.0001	0.0058	0.0089	0.004	0.001	0.0001	0.005
13	1	12 - 13	2036	3	0.0001	0.0058	0.0089	0.004	0.001	0.0001	0.005
14	1	13 - 14	2037	3	0.0001	0.0058	0.0089	0.004	0.001	0.0001	0.005
15	1	14 - 15	2038	3	0.0001	0.0058	0.0089	0.004	0.001	0.0001	0.005
16	1	15 - 16	2039	3	0.0001	0.0058	0.0089	0.004	0.001	0.0001	0.005
17	1	16-17	2040	1	0.0001	0.0058	0.0089	0.0004	0.0001	0.00001	0.001
18	1	17-18	2041	1	0.0001	0.0058	0.0089	0.0004	0.0001	0.00001	0.001
19	1	18-19	2042	1	0.0001	0.0058	0.0089	0.0004	0.0001	0.00001	0.001
20	1	19-20	2043	1	0.0001	0.0058	0.0089	0.0004	0.0001	0.00001	0.001
21	1	20-21	2044	1	0.0001	0.0058	0.0089	0.0004	0.0001	0.00001	0.001
22	1	21-22	2045	1	0.0001	0.0058	0.0089	0.0004	0.0001	0.00001	0.001
23	1	22-23	2046	1	0.0001	0.0058	0.0089	0.0004	0.0001	0.00001	0.001
24	1	23-24	2047	1	0.0001	0.0058	0.0089	0.0004	0.0001	0.00001	0.001
25	1	24-25	2048	1	0.0001	0.0058	0.0089	0.0004	0.0001	0.00001	0.001
26	1	25-26	2049	1	0.0001	0.0058	0.0089	0.0004	0.0001	0.00001	0.001
27	1	26-27	2050	1	0.0001	0.0058	0.0089	0.0004	0.0001	0.00001	0.001
28	1	27-28	2051	1	0.0001	0.0058	0.0089	0.0004	0.0001	0.00001	0.001
29	1	28-29	2052	1	0.0001	0.0058	0.0089	0.0004	0.0001	0.00001	0.001
30	1	29-30	2053	1	0.0001	0.0058	0.0089	0.0004	0.0001	0.00001	0.001
Total Increased Cancer Risk								0.10	0.025	0.002	**0.13**

Maximum	
Hazard Index	**Total PM2.5 (µg/m3)**
0.00003	0.007
0.00003	0.007
0.00003	0.007
0.00003	0.007

* Third trimester of pregnancy

Bay Area Air Quality Management District

Risk & Hazard Stationary Source Inquiry Form

This form is required when users request stationary source data from BAAQMD

This form is to be used with the BAAQMD's Google Earth stationary source screening tables.

Click here for guidance on conducting risk & hazard screening, including roadways & freeways, refer to the District's Risk & Hazard Analysis flow chart.

Click here for District's Recommended Methods for Screening and Modeling Local Risks and Hazards document.

Table A: Requester Contact Information

Date of Request	
Contact Name	
Affiliation	
Phone	
Email	
Project Name	Milpitas Bridge
Address	
City	Milpitas
County	Santa Clara
Type (residential, commercial, mixed use, industrial, etc.)	NA
Project Size (# of units or building square feet)	NA

Comments: New Roadway Connection

For Air District assistance, the following steps must be completed:

1. Complete all the contact and project information requested in Table A. Incomplete forms will not be processed. Please include a project site map.

2. Download and install the free program Google Earth, **http://www.google.com/earth/download/ge/,** and then download the county specific Google Earth stationary source application files from the District's website, **http://www.baaqmd.gov/Divisions/Planning-and-Research/CEQA-GUIDELINES/Tools-and-Methodology.aspx.** The small points on the map represent stationary sources permitted by the District (Map A on right). These permitted sources include diesel back-up generators, gas stations, dry cleaners, boilers, printers, auto spray booths, etc. Click on a point to view the source's Information Table, including the name, location, and preliminary estimated cancer risk, hazard index, and PM2.5 concentration.

3. Find the project site in Google Earth by inputting the site's address in the Google Earth search box.

4. Identify stationary sources within at least a 10[illegible] project site. Verify that the location of the source on the map matches with the source's address in the Information Table, by using the Google Earth add[illegible]x to confirm the source's address location. Please report any mapping errors to the District.

5. List the stationary source information in Table B blue section only.

6. Note that a small percentage of the stationary sources have Health Risk Screening Assessment (HRSA) data INSTEAD of screening level data. These sources will be noted by an asterisk next to the Plant Name (Map B on right). If HRSA values are presented, these values have already been modeled and cannot be adjusted further.

7. Email this completed form to District staff. District staff will provide the most recent risk, hazard, and PM2.5 data that are available for the source(s). If this information or data are not available, source emissions data will be provided. Staff will respond to inquiries within three weeks.

Note that a public records request received for the same stationary source information will cancel the processing of your SSIF request.

Submit forms, maps, and questions to Areana Flores at 415-749-4616, or aflores@baaqmd.gov

Table B: Google Earth data

Distance from Receptor (feet) or MEI[1]	Plant No.	Facility Name	Address	Cancer Risk[2]	Hazard Risk[2]	$PM_{2.5}$[2]	Source No.[3]	Type of Source[4]	Fuel Code[5]	Status/Comments	Distance Adjustment Multiplier	Adjusted Cancer Risk Estimate	Adjusted Hazard Risk	Adjusted PM2.5
	17576	Olson Brothers Body Shop	328 Sango Ct		0.002			Auto Body Coating Operation			0.62	0.0	0.001	0.000
												0.0	0.000	0.0000
												0.0000	0.0000	0.000
												0.0	0.000	0.00
												0.00	0.00000	0.00
												0.000	0.0000	0.00
												0.00	0.000	0.00

Project Site

MEI

Distance from Receptor (feet) or MEI[1]	FACID (Plant No.)	Distance Adjustment Multiplier	Adjusted Cancer Risk Estimate	Adjusted Hazard Risk	Adjusted PM2.5
1439		0.19	0.00	0.00038	0.000
			0.0000	0.00000	0.0000
			0.0000	0.00000	0.0000
			0.00	0.00	0.00
			0.00	0.00	0.00
			0.00	0.000	0.000
			0.00	0.00	0.00

Footnotes:

1. Maximally exposed individual
2. These Cancer Risk, Hazard Index, and PM2.5 columns represent the values in the Google Earth Plant Information Table.
3. Each plant may have multiple permits and sources.
4. Permitted sources include diesel back-up generators, gas stations, dry cleaners, boilers, printers, auto spray booths, etc.
5. Fuel codes: 98 = diesel, 189 = Natural Gas.
6. If a Health Risk Screening Assessment (HRSA) was completed for the source, the application number will be listed here.
7. The date that the HRSA was completed.
8. Engineer who completed the HRSA. For District purposes only.
9. All HRSA completed before 1/5/2010 need to be multiplied by an age sensitivity factor of 1.7.
10. The HRSA "Chronic Health" number represents the Hazard Index.
11. Further information about common sources:
    a. Sources that only include diesel internal combustion engines can be adjusted using the BAAQMD's Diesel Multiplier worksheet.
    b. The risk from natural gas boilers used for space heating when <25 MM BTU/hr would have an estimated cancer risk of one in a million or less, and a chronic hazard index of 0.003 or less. To
    c. BAAQMD Reg 11 Rule 16 required that all co-residential (sharing a wall, floor, ceiling or is in the same building as a residential unit) dry cleaners cease use of perc on July 1, 2010. Therefore, there is no cancer risk, hazard or PM2.5 concentrations from co-residential dry cleaning businesses in the BAAQMD.
    d. Non co-residential dry cleaners must phase out use of perc by Jan. 1, 2023. Therefore, the risk from these dry cleaners does not need to be factored in over a 70-year period, but instead should reflect the
    e. Gas stations can be adjusted using BAAQMD's Gas Station Distance Mulitplier worksheet.
    f. Unless otherwise noted, exempt sources are considered insignificant. See BAAQMD Reg 2 Rule 1 for a list of exempt sources.
    g. This spray booth is considered to be insignificant.

Date last updated:
03/13/2018

ILLINGWORTH & RODKIN, INC.
Acoustics • Air Quality

429 E. Cotati Avenue
Cotati, California 94931

Tel: 707-794-0400 *Fax: 707-794-0405*
www.illingworthrodkin.com *illro@illingworthrodkin.com*

M E M O

Date: November 20, 2023

To: Natalie Noyes, AICP
Senior Project Manager
David J. Powers & Associates, Inc.
1871 The Alameda, Suite 200
San José, CA 95126
nnoyes@davidjpowers.com

From: James Reyff
Illingworth & Rodkin, Inc.

SUBJECT: S. Milpitas Boulevard Vehicular Bridge at Penitencia Creek, Milpitas, CA – Update to the Air Quality Impact Analysis Job#21-084

The air quality and greenhouse gas (GHG) assessment for this project was prepared in late 2021.[1] After preparation of the assessment, there were updates to the Bay Area Air Quality Management District (BAAQMD) California Environmental Quality Act (CEQA) Air Quality Guidelines[2] and the CalEEMod model. This memo describes these updates and explains and how they affect the air quality analysis prepared by Illingworth & Rodkin, Inc.'s (I&R).

Changes to the BAAQMD Guidelines

BAAQMD published updates to their CEQA Guidelines in April of 2023. These updates were mostly a matter of including current practices for assessing impacts that are currently practiced by most consultants performing these types of assessments. An example would be the recommended use of CalEEMod for predicting construction and operational emissions, where the previous 2010 and 2017 guidelines recommended URBMIS. The air quality and GHG assessment completed for this project in 2021used methods to predict impacts that are consistent with the new guidelines.

Updates to CalEEMod

The air quality and GHG assessment completed for this project in 2021used CalEEMod version 2020.4.0. Version 2022.1 was released in May 2022 and was recommended for use by BAAQMD

[1] Illingworth & Rodkin, Inc, *S. Milpitas Boulevard Vehicle Bridge Air Quality Assessment*, November 10, 2021.
[2] See BAAQMD: https://www.baaqmd.gov/plans-and-climate/california-environmental-quality-act-ceqa/updated-ceqa-guidelines

in 2023. Note that CalEEMod is routinely updated as newer, more accurate, information becomes available. In fact, there have been 34 updates to Version 2022.1model since its release. The primary difference between the two versions of CalEEMod is that the newer version uses the latest mobile emission factors that are based on the EMFAC2021 model. The older version of CalEEMod uses EMFAC2017 emission factors. However, I&R modified CalEEMod version 2020.4.0 to use the EMFAC2021 emission factors for the air quality and GHG assessment completed for the project. Also, the new CalEEMod incorporates the latest version of the Roadway Construction Emissions Model (RCEM) that was used to model the roadway construction emissions. The portion of the model that was incorporated into CalEEMod is the same as the version used for the air quality assessment.

Therefore, the air quality modeling is consistent with the new version of CalEEMod. There may be some minor differences due to slight modification of other factors; however, the new model will predict results similar to the air quality assessment. Certainly, any differences would be quite small and would not lead to new significant impacts.

APPENDIX B
Biological Report by H.T. Harvey & Associates, dated 2023

H. T. HARVEY & ASSOCIATES

Ecological Consultants

50 years of field notes, exploration, and excellence

South Milpitas Boulevard Bridge Project
Biological Resources Report

Project #4544-01

Prepared for:

Natalie Noyes
David J. Powers & Associates, Inc.
1736 Franklin Street, Suite 300
Oakland, CA 94612

Prepared by:

H. T. Harvey & Associates

December 8, 2023

Table of Contents

Section 1. Introduction 1
1.1 Project Location 1
1.2 Background 1
1.3 Project Overview 1
1.4 Project Description 5
1.4.1 Bridge 5
1.4.2 Circulation 5
1.4.3 Construction 5

Section 2. Methods 7
2.1 Background Review 7
2.2 Site Visits 7

Section 3. Regulatory Setting 8
3.1 Federal Regulations 8
3.1.1 Clean Water Act 8
3.1.2 Federal Endangered Species Act 8
3.1.3 Magnuson-Stevens Fishery Conservation and Management Act 9
3.1.4 Federal Migratory Bird Treaty Act 9
3.2 State Regulations 10
3.2.1 Porter-Cologne Water Quality Control Act 10
3.2.2 California Endangered Species Act 11
3.2.3 California Environmental Quality Act 11
3.2.4 California Fish and Game Code 12
3.3 Local Regulations 14
3.3.1 City of Milpitas Tree Ordinance 14

Section 4. Environmental Setting 16
4.1 General Project Area Description 16
4.2 Biotic Habitats 16
4.2.1 Developed/Landscaped 18
4.2.2 Riparian Annual Grassland 19
4.2.3 Intermittent Stream/Freshwater Marsh 19

Section 5. Special-Status Species and Sensitive Habitats 21
5.1 Special-Status Plant Species 24
5.2 Special-Status Animal Species 24
5.3 Sensitive Natural Communities, Vegetation Alliances, and Habitats 31
5.3.1 Sensitive Natural Communities 31
5.3.2 Sensitive Vegetation Alliances 32
5.3.3 Sensitive Habitats (Waters of the U.S./State) 32
5.3.4 CDFW Riparian Habitat 32
5.3.5 Nonnative and Invasive Species 32

Section 6. Impacts and Mitigation Measures 33
6.1 Impacts on Special-Status Species 34
6.1.1 Impacts on Developed/Landscaped Habitat and Associated Common Plant and Wildlife Species (Less than Significant) 34
6.1.2 Impacts on Special-Status Plant Species (No Impact) 34
6.1.3 Impacts on Water Quality, Native Fish, and Northwestern Pond Turtles (Less than Significant with Mitigation) 35

6.1.4 Impacts on Wildlife due to Increased Lighting (Less than Significant with Mitigation) 37
6.1.5 Impacts on the San Francisco Common Yellowthroat and Yellow Warbler (Less than Significant) 39
6.1.6 Impacts on Nesting Birds (Less than Significant) 39
6.2 Impacts on Sensitive Communities 40
6.3 Impacts on Wetlands 42
6.4 Impacts on Wildlife Movement 44
6.5 Impacts due to Conflicts with Local Policies 44
6.5.1 Impacts Due to the Removal of Ordinance-Sized Trees (Less than Significant) 44
6.6 Impact due to Conflicts with an Adopted Habitat Conservation Plan 45
6.7 Cumulative Impacts 45

Section 7. Compliance with Additional Laws and Regulations for Nesting Birds 47

Section 8. References 48

Figures

Figure 1. Vicinity Map 2
Figure 2. Study Area 3
Figure 3. Proposed Project 4
Figure 4. Habitats and Impacts Map 17
Figure 5. CNDDB-Mapped Records of Special-Status Plants 22
Figure 6. CNDDB-Mapped Records of Special-Status Animals 23

Tables

Table 1. Special-status Animal Species, Their Status, and Potential Occurrence on the Project Site 25

Appendices

Appendix A. Plants Observed A-1

List of Preparers

Steve Rottenborn, Ph.D., Principal/Senior Wildlife Ecologist

Kelly Hardwicke, Ph.D., Principal/Senior Plant Ecologist

Katie Gallagher, M.S., Project Manager/Senior Plant Ecologist

Jazmine Jensen, B.S., Wildlife Ecologist

Section 1. Introduction

This report describes the biological resources present in the area of the South Milpitas Boulevard Bridge Project, as well as the potential biological impacts of the proposed project and measures necessary to reduce or mitigate those impacts to less-than-significant levels under the California Environmental Quality Act (CEQA). This assessment is based upon the project plans provided to H. T. Harvey & Associates by David J. Powers & Associates through November 2023.

1.1 Project Location

The proposed bridge, located within the City of Milpitas (Figures 1 and 2), would extend South Milpitas Boulevard across Penitencia East Channel, at which point South Milpitas Boulevard would connect with a new connector street to be completed between Tarob Court and Sango Court. The study area for this report spans Penitencia East Channel and the future Tarob Court Connection. The project also includes construction of ramps at either end of the bridge to allow continued access to the existing maintenance roads along the channel (Figure 3). The study area is bounded by dense residential development to the north and office development to the south. The project site is located on the *Milpitas, California*, and U.S. Geological Survey (USGS) quadrangle.

1.2 Background

On June 3, 2008, the Milpitas City Council approved the Transit Area Specific Plan (TASP). The TASP allows redevelopment of an approximately 437-acre area in the southern portion of the City around the proposed Milpitas Bay Area Rapid Transit (BART) station and the Santa Clara Valley Transportation Authority (VTA) Light Rail system. The proposed project would improve vehicular, bicycle, and pedestrian connectivity consistent with the goals and policies identified in the TASP.

1.3 Project Overview

The South Milpitas Boulevard Bridge project proposes to construct a bridge across Penitencia East Channel. The proposed bridge would serve vehicles, pedestrians, and cyclists and would connect South Milpitas Boulevard on the north side of the channel with Tarob Court and Sango Court on the south side of the channel. The proposed project would require demolition of the existing vacant office building located at 1831-1841 Tarob Court (APN 086-36-030) which is owned by the City of Milpitas.

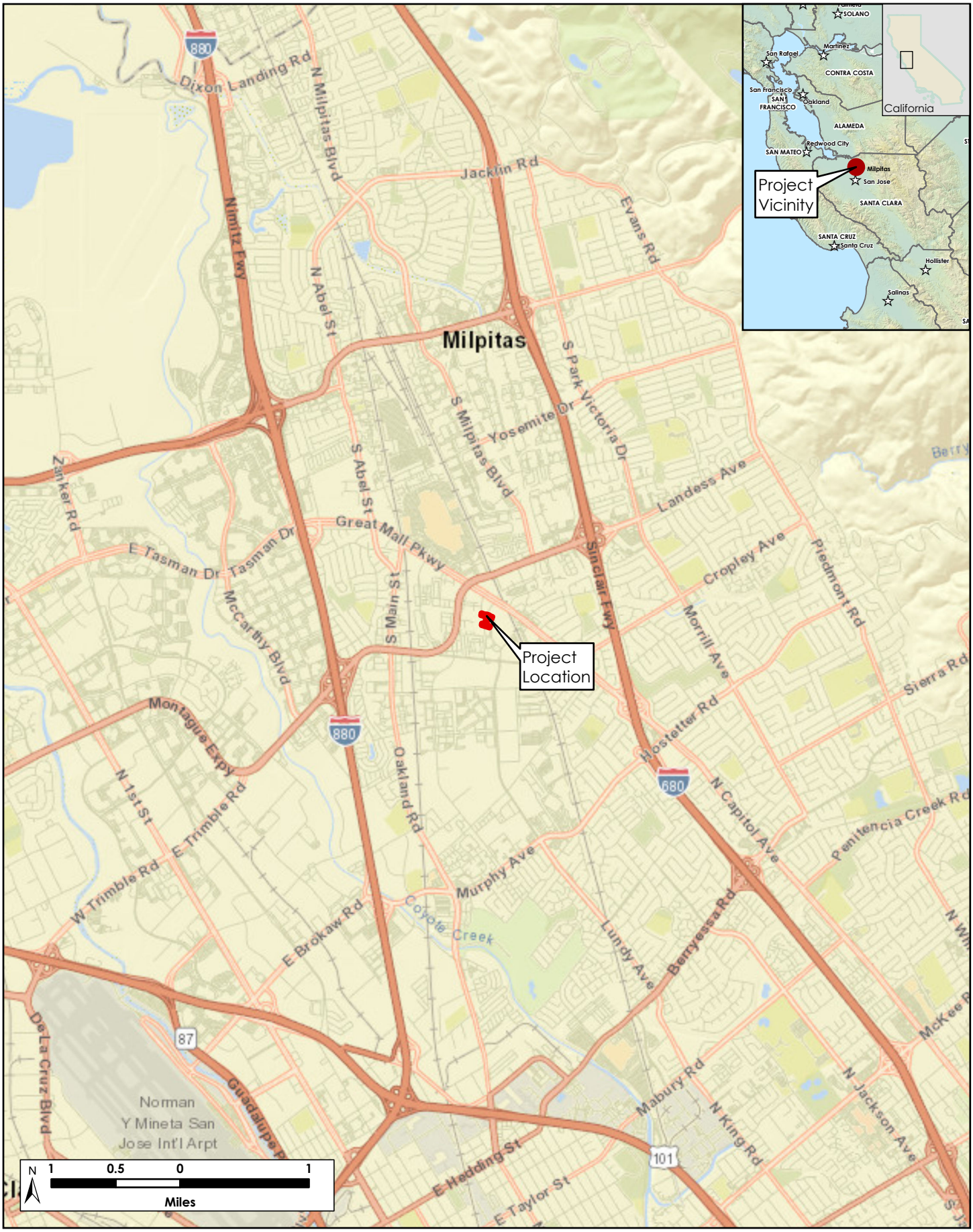

N:\Projects4500\4544-01\Reports\BRR\BRR\BRR.aprx

H. T. HARVEY & ASSOCIATES
Ecological Consultants

Figure 1. Vicinity Map
South Milpitas Boulevard Bridge Biological Resources Report (4544-01)
December 2023

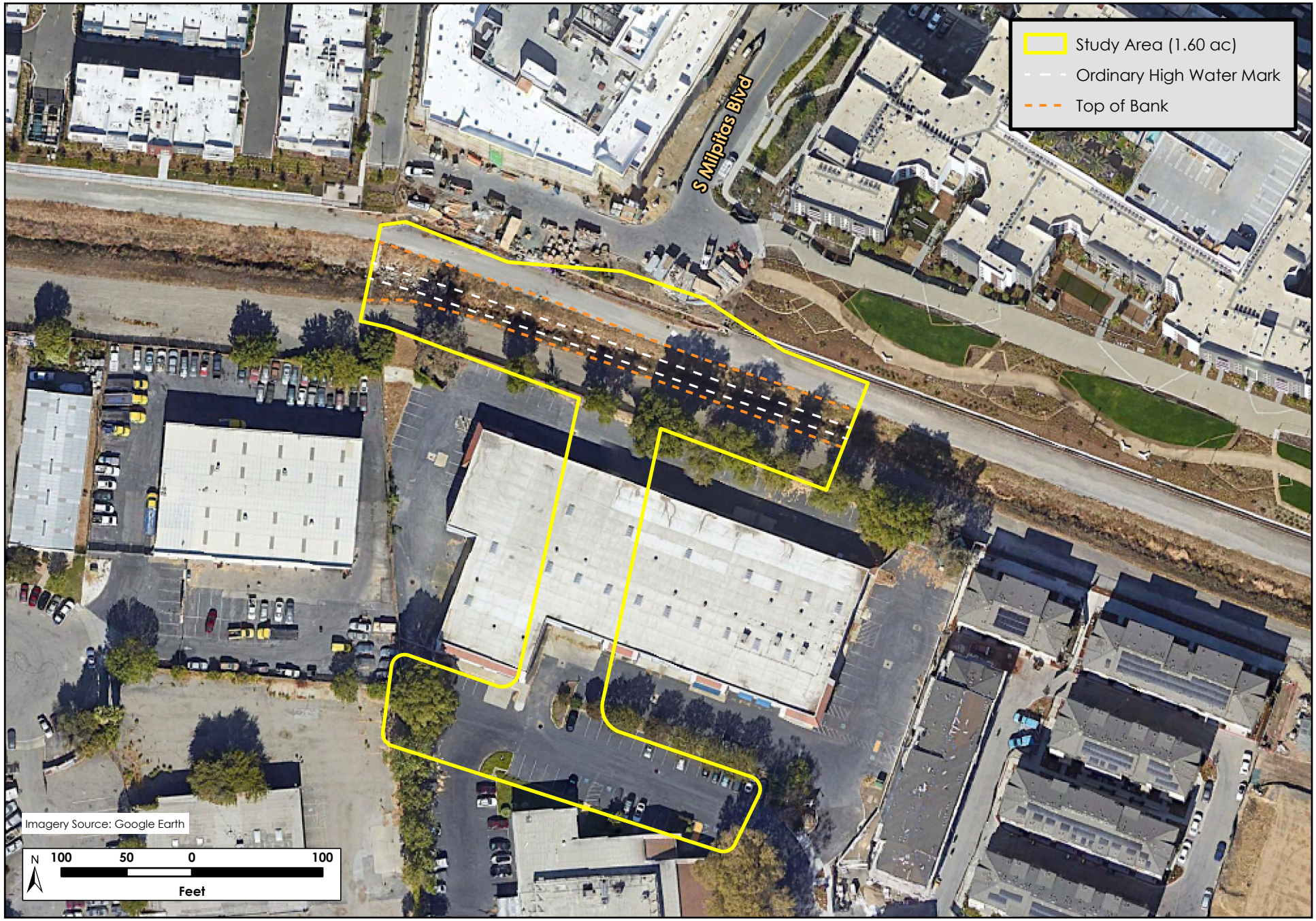

N:\Projects4500\4544-01\Reports\BRR\BRR\BRR Pro 3.1.aprx

H. T. HARVEY & ASSOCIATES
Ecological Consultants

Figure 2. Study Area
South Milpitas Boulevard Bridge Biological Resources Report (4544-01)
December 2023

N:\Projects4500\4544-01\Reports\BRR\BRR\BRR Pro 3.1.aprx

H. T. HARVEY & ASSOCIATES
Ecological Consultants

Figure 3. Proposed Project

South Milpitas Boulevard Bridge Biological Resources Report (4544-01)
December 2023

1.4 Project Description

1.4.1 Bridge

The proposed bridge would be approximately 40 feet long and 48 feet wide. The bridge would include 11-foot vehicle lanes, six-foot bicycle lanes, and six-foot sidewalks in each direction. The railing of the bridge would consist of vertical parallel steel plates mounted on concrete barriers. The steel plates would range in height from 3 to 12 feet and would be illuminated from below, and serve as decorative elements. Additionally, potable water and recycled water lines would be attached to the bridge.

The bridge would be clear-span, meaning that no permanent structures or fill would be placed within the bed or banks of Penitencia East Channel. All abutments and support structures associated with the proposed bridge would occur outside the tops of the banks of Penitencia East Channel. Temporary access into the creek channel may be necessary during construction of the bridge. The bridge would be supported by cast-in-place reinforced concrete abutments supported by cast-in-drilled-hole piers. There would be a total of 14 piers, seven for each abutment. Each of the piers would be 24 inches in diameter and would be drilled to a depth of 60 feet below the ground surface.

The proposed project would also require demolition of the existing office building located at 1831-1841 Tarob Court and removal and replacement of approximately 20 ornamental trees, including a number of protected trees. Replacement of protected trees would occur per the Milpitas Tree Protection Ordinance.

1.4.2 Circulation

The project would extend South Milpitas Boulevard approximately 250 feet from its current termination point to a new intersection and construct a new connector street between the termination points of Tarob Court and Sango Court. The connecting roadways would have a 54-foot right of way that includes 11-foot-wide travel lanes for both vehicles and bicycles going in each direction, an 8-foot-wide vehicle parking aisle on one side of the street, and 7-foot-wide planting strip and 5-foot-wide sidewalks on both sides of the street.

South Milpitas Boulevard between East Capitol Avenue and the Sango Court/Tarbo Court roadway connection would be residential streets with a speed limit of 25 miles per hour. Both the South Milpitas Boulevard/Tarob Court/Sango Court intersection and South Milpitas Boulevard/Vineyard Avenue intersection would be stop sign controlled.

The proposed project would also construct connections to the existing Valley Water maintenance roads, which are located on both sides of Penitencia East Channel, above the tops of banks.

1.4.3 Construction

In addition to construction of the proposed bridge and roadway connection, the project would also require demolition of the existing office building located at 1831-1841 Tarob Court. Project construction would take approximately 18 months to complete. Construction of the bridge would take place in a single dry season from

June 15 to October 15, as required by Valley Water. Temporary access into the creek channel may be necessary during construction of the bridge, potentially requiring dewatering or diversion of the creek if water is present when construction occurs. Falsework may need to be placed in the creek bed during construction.

Demolition of the existing building and construction of the proposed roadway connection is anticipated to occur simultaneously with the bridge construction, estimated between Spring 2024 and Fall 2025. Construction work would occur between 7:00 a.m. and 7:00 p.m., Monday through Sunday, excluding holidays consistent with the City's Municipal Code Section V-213-3(b). No temporary roadway closures are anticipated during project construction.

As required under the National Pollutant Discharge Elimination System (NPDES) Construction General Permit and Regional Water Quality Control Board (RWQCB) Municipal Regional Stormwater Permit (MRP), the proposed project would implement water quality control measures during and after project construction activities to protect Penitencia East Channel and other receiving waters downstream of the project site.

Section 2. Methods

2.1 Background Review

Prior to conducting field work, H. T. Harvey & Associates ecologists reviewed project plans; aerial images (Google LLC 2023); a USGS topographic map; the California Department of Fish and Wildlife's (CDFW's) California Natural Diversity Database (CNDDB) (2023); and other relevant reports, scientific literature, and technical databases. We also perused records of birds reported in nearby areas on eBird (Cornell Lab of Ornithology 2020).

In addition, for plants, we reviewed all species on current California Native Plant Society (CNPS) California Rare Plant Rank (CRPR) 1A, 1B, 2A, 2B, 3 and 4 lists occurring in the project region, which is defined as the *Milpitas, California* USGS 7.5-minute quadrangle and surrounding eight quadrangles (*Newark, Niles, La Costa Valley, Mountain View, Calaveras Reservoir, Cupertino, San Jose West,* and *San Jose East*). In addition, we queried the CNDDB (2023) for natural communities of special concern that occur within the project region. Maps and aerial images of the project site were obtained from several sources and reviewed. These sources included the USGS, National Wetlands Inventory (NWI 2023), and Google Earth (Google LLC 2023).

2.2 Site Visits

Reconnaissance-level field surveys of the project site were conducted by H. T. Harvey & Associates senior botanist/wetland ecologist Katie Gallagher, M.S. on July 1 and October 6, 2021. Senior wildlife ecologist Steve Rottenborn, Ph.D., and wildlife biologist Jazmine Jensen, B.A. visited the site on July 9, 2021. The purpose of these surveys was to provide an impact assessment specific to the proposed redevelopment of the project site as described above. Specifically, surveys were conducted to (1) assess existing biotic habitats and plant and animal communities on the project site, (2) assess the project site for its potential to support special-status species and their habitats, and (3) identify potential jurisdictional habitats, such as waters of the U.S./state and riparian habitat.

Section 3. Regulatory Setting

Biological resources within the project site are regulated by a number of federal, state, and local laws and ordinances, as described below.

3.1 Federal Regulations

3.1.1 Clean Water Act

The Clean Water Act (CWA) functions to maintain and restore the physical, chemical, and biological integrity of Waters of the U.S., which include, but are not limited to, tributaries to traditionally navigable waters currently or historically used for interstate or foreign commerce, and adjacent wetlands. Historically, in non-tidal waters, U. S. Army Corps of Engineers (USACE) jurisdiction under Section 404 of the CWA extends to the Ordinary High Water Mark (OHWM), which is defined in Title 33, Code of Federal Regulations, Part 328.3. If there are wetlands adjacent to channelized features, the limits of USACE jurisdiction extend beyond the OHWM to the outer edges of the wetlands. A May 25, 2023 U.S. Supreme Court decision in *Sackett v. Environmental Protection Agency* limited the definition of jurisdictional wetlands and other waters that are considered waters of the U.S. to those wetlands and other waters having a continuous surface connection with traditional navigable waters or their relatively permanent tributaries.

Construction activities within jurisdictional waters are regulated by the USACE. The placement of fill into such waters must comply with permit requirements of the USACE. No USACE permit will be effective in the absence of Section 401 Water Quality Certification. The State Water Resources Control Board (SWRCB) is the state agency (together with the Regional Water Quality Control Boards [RWQCBs]) charged with implementing water quality certification in California.

Project Applicability: Penitencia East Channel is considered waters of the U.S. based on the presence of OHWMs on opposing banks, regular flow, intermittent hydrology in most years, and direct hydrologic connectivity to other navigable waters (Coyote Creek and eventually San Francisco Bay). The channel bottom was determined to support three-parameter wetlands (USACE 2008) in some locations, based on the presence of hydrophytic vegetation and hydric soils, and indirect observations of hydrology (i.e., surface soil cracks, inundation on aerial imagery, etc.). Therefore, depending on actual construction techniques for the bridge and the level of access and temporary fills that may be needed to be placed within the channel for construction of the bridge, a Section 404 permit from the USACE may be necessary to authorize the project's proposed impacts on wetlands and other waters.

3.1.2 Federal Endangered Species Act

The Federal Endangered Species Act (FESA) protects federally listed wildlife species from harm or *take*, which is broadly defined as "to harass, harm, pursue, hunt, shoot, wound, kill, trap, capture, collect, or attempt to

engage in any such conduct." *Take* can also include habitat modification or degradation that directly results in death or injury of a listed wildlife species. An activity can be defined as *take* even if it is unintentional or accidental. Listed plant species are provided less protection than listed wildlife species. Listed plant species are legally protected from take under FESA only if they occur on federal lands.

The U.S. Fish and Wildlife Service (USFWS) and the National Marine Fisheries Service (NMFS) have jurisdiction over federally listed, threatened, and endangered species under FESA. The USFWS also maintains lists of proposed and candidate species. Species on these lists are not legally protected under FESA but may become listed in the near future and are often included in their review of a project.

Project Applicability: No federally listed plant or animal species occur on the project site. The northwestern pond turtle (*Actinemys marmorata*), proposed for federal listing, could potentially occur in the project area, though the project site does not provide high-quality habitat, and the species could occur only as a very infrequent dispersant, if it occurs at all. The monarch butterfly (*Danaus plexippus*), a candidate for federal listing, is expected to occur in the project area as an occasional migrant. Although adults may occasionally forage for nectar on flowering plants in the project vicinity, no milkweed (*Asclepias* sp.), which serves as the species' larval host plant, was observed or is expected to occur in the project area. Therefore, monarchs would not breed in the project area. If either the northwestern pond turtle or monarch butterfly is listed prior to project initiation, and if take of the species may occur, consultation between the USACE and USFWS would occur during Section 404 permitting.

3.1.3 Magnuson-Stevens Fishery Conservation and Management Act

The Magnuson-Stevens Fishery Conservation and Management Act governs all fishery management activities that occur in federal waters within the United States' 200-nautical-mile limit. The Act establishes eight Regional Fishery Management Councils responsible for the preparation of fishery management plans (FMPs) to achieve the optimum yield from U.S. fisheries in their regions. These councils, with assistance from NMFS, establish Essential Fish Habitat (EFH) in FMPs for all managed species. Federal agencies that fund, permit, or implement activities that may adversely affect EFH are required to consult with the NMFS regarding potential adverse effects of their actions on EFH, and respond in writing to recommendations by the NMFS.

Project Applicability: No EFH is present on the project site, as the channel on the project site is intermittent and dry most of the year and thus does not provide suitable habitat for FMP-managed fish species.

3.1.4 Federal Migratory Bird Treaty Act

The federal Migratory Bird Treaty Act (MBTA), 16 U.S.C. Section703, prohibits killing, possessing, or trading of migratory birds except in accordance with regulations prescribed by the Secretary of the Interior. The MBTA protects whole birds, parts of birds, and bird eggs and nests; and prohibits the possession of all nests of protected bird species whether they are active or inactive. An active nest is defined as having eggs or young, as described by the Department of the Interior in its April 16, 2003 Migratory Bird Permit Memorandum. Nest starts (nests that are under construction and do not yet contain eggs) are not protected from destruction.

Project Applicability: All native bird species that occur on the project site are protected under the MBTA.

3.2 State Regulations

3.2.1 Porter-Cologne Water Quality Control Act

The SWRCB works in coordination with the nine RWQCBs to preserve, protect, enhance, and restore water quality. Each RWQCB makes decisions related to water quality for its region, and may approve, with or without conditions, or deny projects that could affect waters of the state. Their authority comes from the CWA and Porter-Cologne. Porter-Cologne broadly defines waters of the state as "any surface water or groundwater, including saline waters, within the boundaries of the state." Because Porter-Cologne applies to any water, whereas the CWA applies only to certain waters, California's jurisdictional reach overlaps and may exceed the boundaries of waters of the U.S. For example, Water Quality Order No. 2004-0004-DWQ states that "shallow" waters of the state include headwaters, wetlands, and riparian areas. Moreover, the San Francisco Bay Region RWQCB's Assistant Executive Director has stated that, in practice, the RWQCBs claim jurisdiction over riparian areas. Where riparian habitat is not present, such as may be the case at headwaters, jurisdiction is taken to the top of bank.

On April 2, 2019, the SWRCB adopted the State Wetland Definition and Procedures for Discharges of Dredged or Fill Material to Waters of the State. In these new guidelines, riparian habitats are not specifically described as waters of the state but instead as important buffer habitats to streams that do conform to the State Wetland Definition. The Procedures describe riparian habitat buffers as important resources that may both be included in required mitigation packages for permits for impacts to waters of the state, as well as areas requiring permit authorization from the RWQCBs to impact.

Pursuant to the CWA, projects that are regulated by the USACE must also obtain a Section 401 Water Quality Certification permit from the RWQCB. This certification ensures that a proposed project will uphold state water quality standards. Because California's jurisdiction to regulate its water resources is much broader than that of the federal government, proposed impacts on waters of the state require Water Quality Certification even if the area occurs outside of USACE jurisdiction. Moreover, the RWQCB may impose mitigation requirements even if the USACE does not. Under the Porter-Cologne, the SWRCB and the nine regional boards also have the responsibility of granting CWA National Pollutant Discharge Elimination System (NPDES) permits and Waste Discharge Requirements for certain point-source and non-point discharges to waters. These regulations limit impacts on aquatic and riparian habitats from a variety of urban sources.

Project Applicability: Waters of the state include all potential waters of the U.S., including the portions of Penitencia East Channel. The RWQCB will also consider the riparian vegetation rooted below top of bank and areas of the riparian banks above the OHWM and below top of bank to be important buffers to waters of the state associated with the channel. Therefore, we expect that a Section 401 water quality certification (or Waste Discharge Requirement under the Porter-Cologne Act if no Section 404 permit is needed) from the RWQCB

would be necessary to authorize the project's proposed impacts on wetlands and riparian buffers regulated by the RWQCB.

3.2.2 California Endangered Species Act

The California Endangered Species Act (CESA; California Fish and Game Code, Chapter 1.5, Sections 2050-2116) prohibits the take of any plant or animal listed or proposed for listing as rare (plants only), threatened, or endangered. In accordance with CESA, the CDFW has jurisdiction over state-listed species (Fish and Game Code 2070). The CDFW regulates activities that may result in take of individuals (i.e., "hunt, pursue, catch, capture, or kill, or attempt to hunt, pursue, catch, capture, or kill"). Habitat degradation or modification is not expressly included in the definition of take under the California Fish and Game Code. The CDFW, however, has interpreted take to include the "killing of a member of a species which is the proximate result of habitat modification."

Project Applicability: No suitable habitat for any state-listed plant or animal species occurs in the project site, and thus no state-listed plants or animals are expected to occur in the project area.

3.2.3 California Environmental Quality Act

CEQA is a state law that requires state and local agencies to document and consider the environmental implications of their actions and to refrain from approving projects with significant environmental effects if there are feasible alternatives or mitigation measures that can substantially lessen or avoid those effects. CEQA requires the full disclosure of the environmental effects of agency actions, such as approval of a general plan update or the projects covered by that plan, on resources such as air quality, water quality, cultural resources, and biological resources. The State Resources Agency promulgated guidelines for implementing CEQA are known as the State CEQA Guidelines.

Section 15380(b) of the State CEQA Guidelines provides that a species not listed on the federal or state lists of protected species may be considered rare if the species can be shown to meet certain specified criteria. These criteria have been modeled after the definitions in FESA and CESA and the section of the California Fish and Game Code dealing with rare or endangered plants and animals. This section was included in the guidelines primarily to deal with situations in which a public agency is reviewing a project that may have a significant effect on a species that has not yet been listed by either the USFWS or CDFW or species that are locally or regionally rare.

The CDFW has produced three lists (amphibians and reptiles, birds, and mammals) of "species of special concern" that serve as "watch lists". Species on these lists are of limited distribution or the extent of their habitats has been reduced substantially, such that threat to their populations may be imminent. Thus, their populations should be monitored. They may receive special attention during environmental review as potential rare species, but do not have specific statutory protection. All potentially rare or sensitive species, or habitats capable of supporting rare species, are considered for environmental review per the CEQA Section 15380(b).

The CNPS, a non-governmental conservation organization, has developed CRPRs for plant species of concern in California in the Inventory of Rare and Endangered Plants (CNPS 2020). The CRPRs include lichens, vascular, and non-vascular plants, and are defined as follows:

- CRPR 1A Plants considered extinct.
- CRPR 1B Plants rare, threatened, or endangered in California and elsewhere.
- CRPR 2A Plants considered extinct in California but more common elsewhere.
- CRPR 2B Plants rare, threatened, or endangered in California but more common elsewhere.
- CRPR 3 Plants about which more information is needed - review list.
- CRPR 4 Plants of limited distribution-watch list.

The CRPRs are further described by the following threat code extensions:

- .1—seriously endangered in California;
- .2—fairly endangered in California;
- .3—not very endangered in California.

Although the CNPS is not a regulatory agency and plants on these lists have no formal regulatory protection, plants appearing as CRPR 1B or 2 are, in general, considered to meet CEQA's Section 15380 criteria, and adverse effects on these species may be considered significant. Impacts on plants that are listed by the CNPS as CRPR 3 or 4 are also considered during CEQA review, although because these species are typically not as rare as those of CRPR 1B or 2, impacts on them are less frequently considered significant.

Compliance with CEQA Guidelines Section 15065(a) requires consideration of natural communities of special concern, in addition to plant and wildlife species. Vegetation types of "special concern" are tracked in Rarefind (CNDDB 2023). Further, the CDFW ranks sensitive vegetation alliances based on their global (G) and state (S) rankings analogous to those provided in the CNDDB. Global rankings (G1–G5) of natural communities reflect the overall condition (rarity and endangerment) of a habitat throughout its range, whereas S rankings reflect the condition of a habitat within California. If an alliance is marked as a G1–G3, all the associations within it would also be of high priority. The CDFW provides the Vegetation Classification and Mapping Program's currently accepted list of vegetation alliances and associations (CDFW 2023).

Project Applicability: All potential impacts on biological resources will be considered during CEQA review of the project in the context of this Biological Resources Report.

3.2.4 California Fish and Game Code

Ephemeral and intermittent streams, rivers, creeks, dry washes, sloughs, blue line streams on USGS maps, and watercourses with subsurface flows fall under CDFW jurisdiction. Canals, aqueducts, irrigation ditches, and

other means of water conveyance may also be considered streams if they support aquatic life, riparian vegetation, or stream-dependent terrestrial wildlife. A *stream* is defined in Title 14, California Code of Regulations Section 1.72, as "a body of water that follows at least periodically or intermittently through a bed or channel having banks and that supports fish and other aquatic life. This includes watercourses having surface or subsurface flow that supports or has supported riparian vegetation." Using this definition, CDFW extends its jurisdiction to encompass riparian habitats that function as a part of a watercourse. California Fish and Game Code Section 2786 defines *riparian habitat* as "lands which contain habitat which grows close to and which depends upon soil moisture from a nearby freshwater source." The lateral extent of a stream and associated riparian habitat that would fall under the jurisdiction of CDFW can be measured in several ways, depending on the particular situation and the type of fish or wildlife at risk. At minimum, CDFW would claim jurisdiction over a stream's bed and bank. Where riparian habitat is present, the outer edge of riparian vegetation is generally used as the line of demarcation between riparian and upland habitats.

Pursuant to California Fish and Game Code Section 1603, CDFW regulates any project proposed by any person that will "substantially divert or obstruct the natural flow or substantially change the bed, channel, or bank of any river, stream, or lake designated by the department, or use any material from the streambeds." California Fish and Game Code Section 1602 requires an entity to notify CDFW of any proposed activity that may modify a river, stream, or lake. If CDFW determines that proposed activities may substantially adversely affect fish and wildlife resources, a Lake and Streambed Alteration Agreement (LSAA) must be prepared. The LSAA sets reasonable conditions necessary to protect fish and wildlife, and must comply with CEQA. The applicant may then proceed with the activity in accordance with the final LSAA.

Certain sections of the California Fish and Game Code describe regulations pertaining to protection of certain wildlife species. For example, Code Section 2000 prohibits take of any bird, mammal, fish, reptile, or amphibian except as provided by other sections of the code.

The California Fish and Game Code Sections 3503, 3513, and 3800 (and other sections and subsections) protect native birds, including their nests and eggs, from all forms of take. Disturbance that causes nest abandonment and/or loss of reproductive effort is considered *take* by the CDFW. Raptors (e.g., eagles, hawks, and owls) and their nests are specifically protected in California under Code Section 3503.5. Section 3503.5 states that it is "unlawful to take, possess, or destroy any birds in the order Falconiformes or Strigiformes (birds of prey) or to take, possess, or destroy the nest or eggs of any such bird except as otherwise provided by this code or any regulation adopted pursuant thereto."

Bats and other non-game mammals are protected by California Fish and Game Code Section 4150, which states that all non-game mammals or parts thereof may not be taken or possessed except as provided otherwise in the code or in accordance with regulations adopted by the commission. Activities resulting in mortality of non-game mammals (e.g., destruction of an occupied nonbreeding bat roost, resulting in the death of bats), or disturbance that causes the loss of a maternity colony of bats (resulting in the death of young), may be considered *take* by the CDFW.

Project Applicability: CDFW jurisdiction under Section 1602 of the California Fish and Game Code would include the bed and banks of Penitencia East Channel up to the tops of the banks. No additional riparian habitat (outside the tops of the creek banks) is present.

Most native bird, mammal, and other wildlife species that occur in the study area and in the immediate vicinity are protected by the California Fish and Game Code.

3.3 Local Regulations

The project is located within the limits of the City of Milpitas. Applicable City ordinances and policies are discussed below.

3.3.1 City of Milpitas Tree Ordinance

The City of Milpitas, in Section 2-7.01 of the Municipal Code, requires a permit to remove or prune a tree on specified property types once it reaches a certain size in circumference. A permit is required to remove a tree of any size on residential, commercial/industrial, zoning/subdivision and vacant lots. A protected tree is:

1. All trees which have a fifty-six-inch (56") or greater circumference of any trunk measured 4 ½ feet from the ground and located on developed residential property.

2. All trees which have a thirty-seven-inch (37") or greater circumference of any trunk measured 4 ½ feet from the ground and located on developed commercial or industrial property.

3. All trees which have a thirty-seven-inch (37") or greater circumference of any trunk measured 4 ½ feet from the ground, when removal relates to any transaction for which zoning approval or subdivision approval is required.

4. Any tree existing at the time of a zoning or subdivision approval and was a specific subject of such approval or otherwise covered by subsection (b) above.

5. All trees which have a thirty-seven-inch (37") or greater circumference of any trunk measured 4 ½ feet from the ground and located on a vacant, undeveloped or underdeveloped property.

6. All heritage trees or groves of trees as defined in Section 2-2.10.

To remove any trees that meet the above conditions, a tree removal permit must be secured from the City of Milpitas.

Project Applicability: All trees within the study area are located in what could likely be classified as vacant, undeveloped, or underdeveloped property, rendering the protection threshold to be 37 inches. The project intends to remove several trees, including a number of ordinance-sized trees, in the study area. The project will

obtain a tree removal permit through the City's planning and building department and comply with the City's tree replacement guidelines and policies for any trees that need to be removed.

Section 4. Environmental Setting

4.1 General Project Area Description

The study area is located in Milpitas in Santa Clara County, California. Based on the 30-year climate normals from 1980 through 2010, the project site receives approximately 16 inches of annual precipitation and has a mean temperature range of 49.6°– 70.9°F (PRISM Climate Group 2023). Elevations on the project site range from approximately 43 feet to 47 feet above sea level. The site is underlain by one soil unit: Urbanland-Clear Lake complex, 0 to 2% slopes (NRCS 2023). The soil unit is typically found on basin floors, and is composed of alluvium derived from metamorphic and sedimentary rock (NRCS 2023).

The Penitencia East Channel is mapped in the NWI (2023) as a temporarily flooded, excavated (man-made), intermittent stream. This stormwater conveyance feature is a trapezoidal channel maintained by Valley Water for flood protection, water resource management, and stream stewardship. The channel is a part of the Lower Penitencia Watershed, and flows into Lower Penitencia Creek approximately 380 feet east of McCandless Drive.

The highest point in the study area is the ground level of multifamily housing to the north of the channel. A retaining wall facilitates the elevation drop from the housing level to the existing Valley Water Maintenance Road. The channel edge of the road is the top of bank for the channel. The channel banks are graded soil and were recently mowed. The top third of the bank is very moderately sloped, then it transitions to a roughly 2:1 slope until it reaches the OHWM. From the OHWM to the channel bottom, the bank is a 3–4-foot vertical drop. Just downstream and outside of the Study Area, an outlet conveys perennial urban runoff into riprap and open water. Throughout the study area (i.e., upstream of this outlet), no surface water was observed during our site visits.

4.2 Biotic Habitats

Reconnaissance-level surveys identified three habitat types or land uses in the study area: developed/landscaped; riparian annual grassland, and intermittent stream/freshwater marsh. This habitat is described in detail below, and the distribution of these habitats is provided in Figure 4. Plant species observed during the reconnaissance-level survey are listed in Appendix A.

N:\Projects4500\4544-01\Reports\BRR\BRR\BRR Pro 3.1.aprx

H. T. HARVEY & ASSOCIATES
Ecological Consultants

Figure 4. Habitats and Impacts Map

South Milpitas Boulevard Bridge Biological Resources Report (4544-01)
December 2023

4.2.1 Developed/Landscaped

Photo 1. Developed/landscaped habitat on the project site.

Vegetation. The majority of the project site consists of developed and landscaped habitat in the form of asphalt parking areas and the existing building on the south side of the creek,. gravel and asphalt access roads, ornamental trees, and landscaping. Landscaping in the study area includes mostly mature ornamental trees along the fenceline south of Penitencia East Channel and in the Tarob Court Connection area, and recently installed landscaping associated with the adjacent multifamily housing. Fences border the north and south boundary of the study area and include a retaining wall along the north boundary. The most prevalent ornamental tree species includes shamel ash (*Fraxinus uhdei*) and eucalyptus (*Eucalyptus* sp.). Various annual weeds grow sparsely within the pavement cracks and gravel.

Wildlife. The developed/landscaped habitat on the proposed project footprint is of relatively low value to wildlife due to the general lack of vegetation and the predominance of non-native species where vegetation is present. California towhees (*Melozone crissalis*), lesser goldfinches (*Spinus psaltria*), and American crows (*Corvus brachyrhynchos*) were all observed using the graveled access roads and adjacent landscaping during the reconnaissance survey. The row of non-native ornamental shrubs bordering the northern access road on the project site, and the row of ornamental trees bordering the southern access road, provide nesting and foraging opportunities for some urban-adapted species. House finches (*Haemorhous mexicanus*), Anna's hummingbirds (*Calypte anna*), bushtits (*Psaltriparus minimus*), and California towhees were all observed foraging in the ornamental shrubs and trees during the reconnaissance survey. Anna's hummingbirds, bushtits, and house finches may all nest in these ornamental shrubs. Additional species such as the white-crowned sparrow (*Zonotrichia leucophrys*), golden-crowned sparrow (*Zonotrichia atricapilla*), and Lincoln's sparrow (*Melospiza lincolnii)* could potentially forage in these habitats during migration or winter. Few species of reptiles and amphibians occur in the developed/landscaped habitat on the project site due to its disturbed nature and low habitat heterogeneity. Nevertheless, reptiles such as the western fence lizard (*Sceloporus occidentalis*) may occur in this habitat. Common urban-adapted mammal species that may occur on the project site include the native raccoon (*Procyon lotor*) as well as the non-native house mouse (*Mus musculus*), Norway rat (*Rattus norvegicus*), and black rat (*Rattus rattus*).

No old nests of raptors were observed on the site, or in surrounding areas, during the reconnaissance survey. Further, an examination of the trees and buildings on and adjacent to the site failed to find any large cavities that might provide suitable habitat for a large roosting or maternity colony of bats.

In general, the habitats identified in the study area provide habitat for certain common, urban-adapted wildlife species typically associated with urban development. The study area, which does not contain sensitive habitat, and which is embedded within a developed landscape characterized by extensive commercial and residential development, is isolated from extant regional wildlife populations and does not provide habitat for species that require high-quality, contiguous habitat.

4.2.2 Riparian Annual Grassland

Vegetation. This habitat type occurs between the top of bank along the edge of the Valley Water access roads and the OHWM. The channel banks consist entirely of ruderal grass and herb species. The dominant species include wild oats (*Avena fatua*), Italian thistle (*Carduus pycnocephalus*), prickly lettuce (*Lactuca serriola*), wild radish (*Raphanus sativa*), bristly ox-tongue (*Helminthotheca echioides*), and cheeseweed (*Malva parviflora*). Other species that are less common include ripgut brome (*Bromus diandrus*), field bindweed (*Convolvulus arvensis*), smilo grass (*Stipa millacea*), milkvetch (*Vicia sativa*), salsify (*Tragopogon* sp.), and Bermuda grass (*Cynodon dactylon*). The slopes appeared to be recently mowed during our site visit, and no bare soil was visible through the herb and annual grass thatch.

Wildlife. Common, urban-adapted bird species found elsewhere in the study area likely also occur in the ruderal grassland levee slope, although this habitat has limited value for wildlife due to the absence of trees and shrubs and its isolation from large, contiguous tracts of other grassland. Two feral domestic cats (*Felis catus*) were observed in this habitat; the presence of these non-native predators may further reduce the value of the habitat for wildlife. No evidence of burrowing mammals, such as California ground squirrels (*Otospermophilus beecheyi*) or valley pocket gophers (*Thomomys bottae*), was observed. Lesser goldfinches, California towhees, and song sparrows (*Melospiza melodia*) were all observed foraging in the ruderal grassland. The rock pigeon (*Columba livia*), a non-native species, likely also forages in this habitat.

4.2.3 Intermittent Stream/Freshwater Marsh

Vegetation. This habitat type occurs between the OHWM and the channel bottom. This reach of the channel supports a seasonally high groundwater table and seasonal flows during the wet season. An outlet immediately downstream of the study area conveyed perennial urban runoff, but the channel bottom in the study area was dry during both site visits. The portion between the OHWM and the toe of the slope is a vertical face throughout the Study Area and supports loamy eroded soils and ruderal transitional species, such as Italian ryegrass (*Festuca perennis*) and smilo grass. The substrate on the channel bottom consists of loose coarse sand that has likely accumulated during storm events in some areas, while in other areas it consists of bare loamy soil with surface cracks and only light leaf litter scattered about. In the portions of the channel bottom with accumulated sand on the surface, diminutive upland species were observed to be rooted shallowly in the sand; these included small seed sandmat (*Euphorbia polycarpa*), sharp-leaved kickxia (*Kickxia elatine*), oval-leaf knotweed (*Polygonum aviculare*), and variable burclover (*Medicago polymorpha*). Visible hydric soil indicators begin about 10-12 cm below the surface of the sand. In the portions where surface cracks are exposed, indicators of hydric soils were observed about 2 cm below the surface. The hydric soils were moist but not wet during our site visit. Drift deposits were observed in several spots throughout the study area.

The vegetation rooted deeper than the accumulated sand substrate in the channel bottom consists almost entirely of hydrophytic species, and we therefore considered areas dominated by this vegetation to comprise freshwater marsh habitat. A wide variety of species were observed in these areas, including water plantain (*Alisma lanceolatum*), barnyard grass (*Echinochloa crus-galli*), tall cyperus (*Cyperus eragrostis*), tall willowherb (*Epilobium brachycarpum*), loosestrife (*Lythrum* sp.), spotted smartweed (*Persicaria maculosa*), curly dock (*Rumex crispus*), white sweetclover (*Melilotus albus*), speedwell (*Veronica* sp.), rabbitfoot grass (*Polypogon monspieliensis*), cattails (*Typha dominguensis*), and Bermuda grass. Saplings of date palm (*Phoenix canariensis*) and Fremont cottonwood (*Populus fremontii*) were the only species observed that were not an herb or grass.

Thus, the channel bottom from the toe of slope to the toe of slope meets the requirements of a three-parameter wetland. In general, the freshwater marsh habitat comprised roughly 80% of this habitat type and intermittent stream (i.e., bare sand or soil) comprised roughly 20%.

Wildlife. The stream habitat in the project area is intermittent and dry, but turns perennial downstream to the west, outside the project boundary. The perennial stream found in the west channel provides foraging habitat for some wetland and aquatic bird species, such as mallards (*Anas platyrhynchos*), great egrets (*Ardea alba*), snowy egrets (*Egretta thula*), and black phoebes (*Sayornis nigricans*), as well as some migrants such as Wilson's snipe (*Gallinago delicata*). The perennial stream habitat may also serve as habitat for amphibians such as Pacific tree frogs (*Pseudacris regilla*) and a variety of common fish species. However, the intermittent reach of stream on the project site is much drier. Although the aforementioned species could potentially forage in the on-site reach when it conveys water, they are expected to occur only temporarily, when flow is present, and likely in low numbers.

Section 5. Special-Status Species and Sensitive Habitats

CEQA requires assessment of the effects of a project on species that are protected by state, federal, or local governments as "threatened, rare, or endangered"; such species are typically described as "special-status species". For the purpose of the environmental review of the project, special-status species have been defined as described below. Impacts on these species are regulated by some of the federal, state, and local laws and ordinances described in Section 3 above.

For purposes of this analysis, "special-status" plants are considered plant species that meet one or more of the following criteria:

- Listed under FESA as threatened, endangered, proposed threatened, proposed endangered, or a candidate species.
- Listed under CESA as threatened, endangered, rare, or a candidate species.
- Listed by the CNPS as CRPR 1A, 1B, 2, 3, or 4.

For purposes of this analysis, "special-status" animals are considered animal species that meet one or more of the following criteria:

- Listed under FESA as threatened, endangered, proposed threatened, proposed endangered, or a candidate species.
- Listed under CESA as threatened, endangered, or a candidate threatened or endangered species.
- Designated by the CDFW as a California species of special concern.
- Listed in the California Fish and Game Code as fully protected species (fully protected birds are provided in Section 3511, mammals in Section 4700, reptiles and amphibians in Section 5050, and fish in Section 5515).

Information concerning threatened, endangered, and other special-status species that potentially occur on the project site was collected from several sources and reviewed by H. T. Harvey & Associates biologists as described in Section 2.1 above. Figure 5 depicts CNDDB records of special-status plant species in the general vicinity of the project site and Figure 6 depicts CNDDB records of special-status animal species. These generalized maps show areas where special-status species are known to occur or have occurred historically.

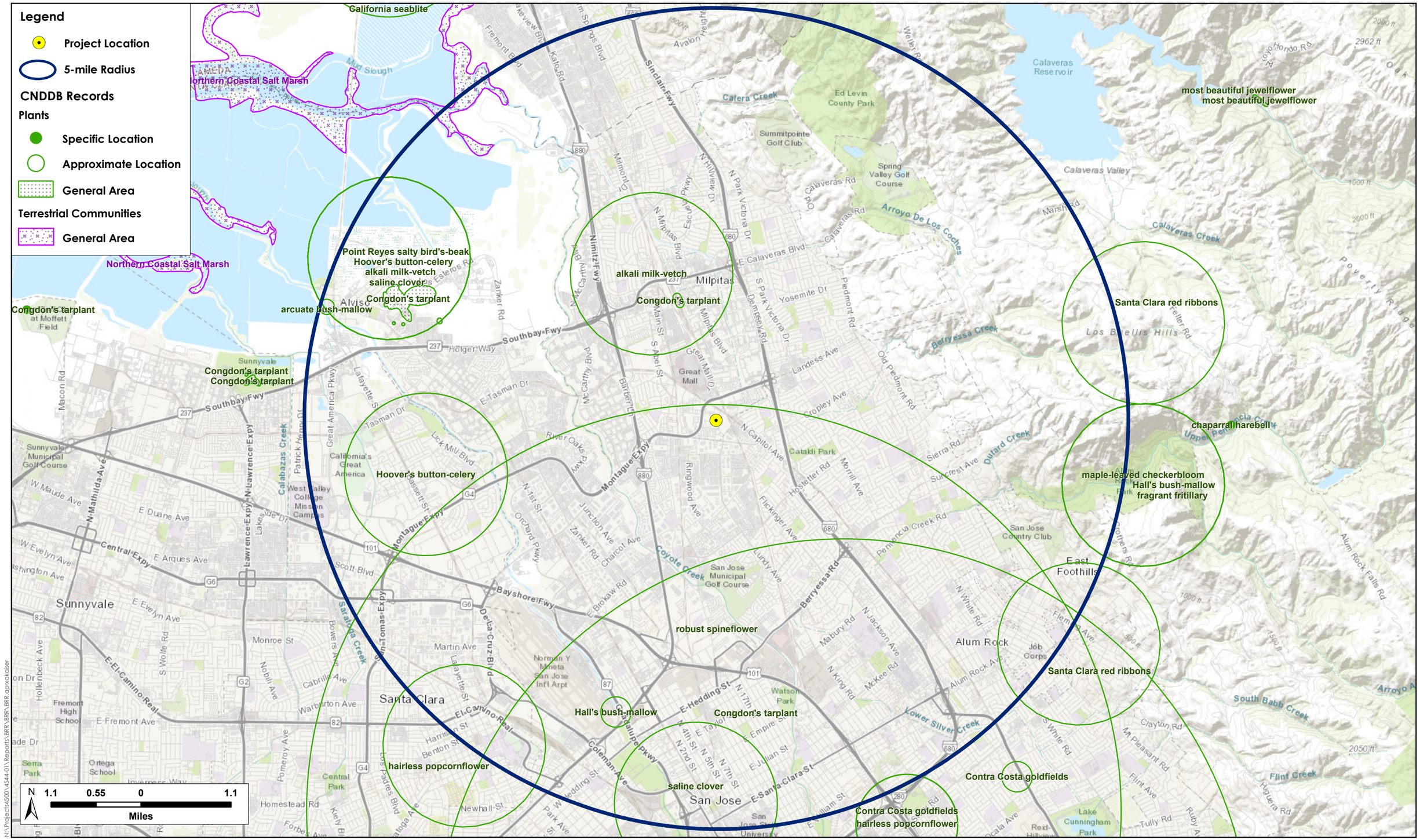

H. T. HARVEY & ASSOCIATES
Ecological Consultants

Figure 5. CNDDB-Mapped Records of Special-Status Plants
South Milpitas Boulevard Bridge Biological Resources Report (4544-01)
December 2023

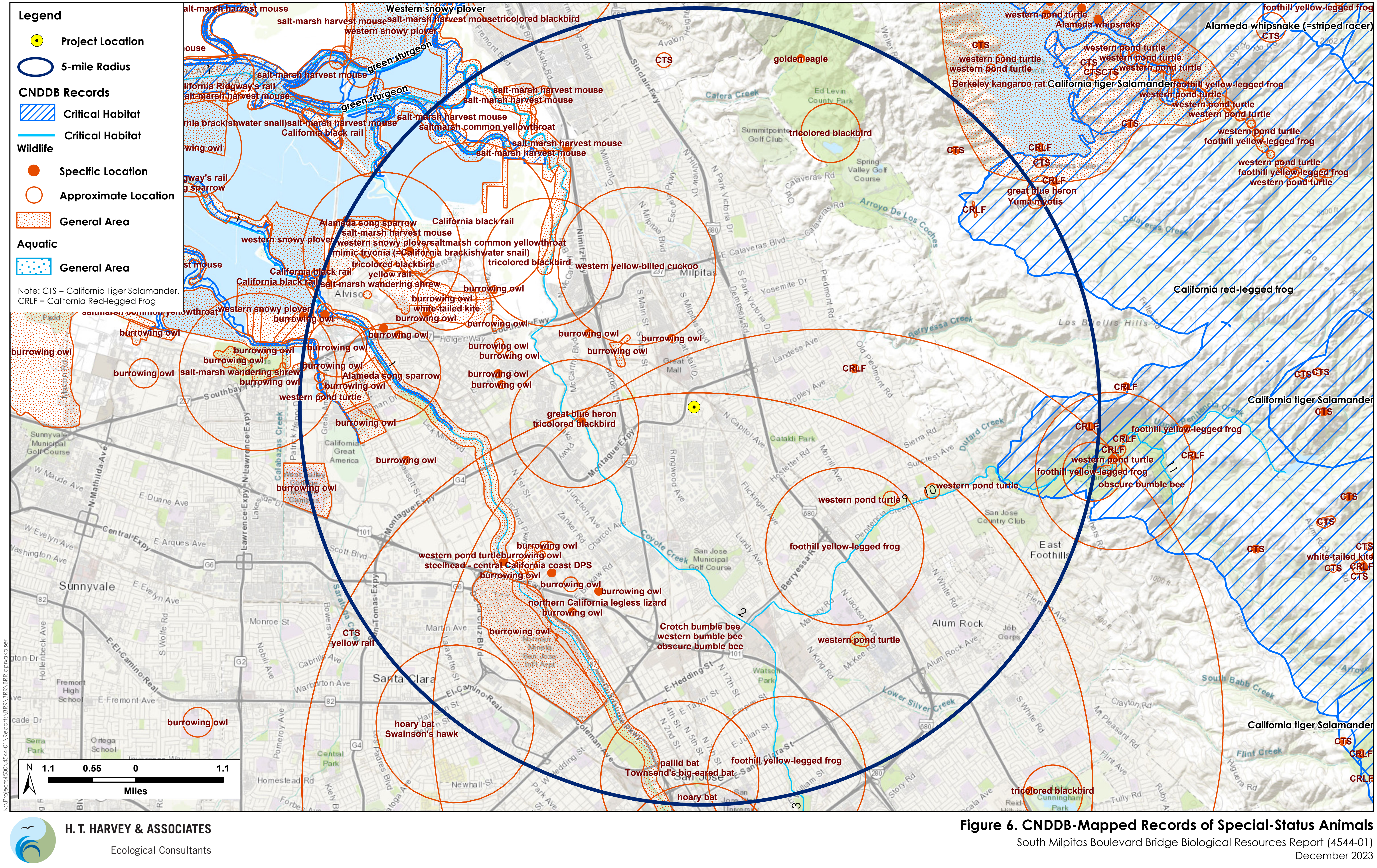

Figure 6. CNDDB-Mapped Records of Special-Status Animals

South Milpitas Boulevard Bridge Biological Resources Report (4544-01)
December 2023

5.1 Special-Status Plant Species

The CNPS (2023) and CNDDB (2023) identify 54 special-status plant species as potentially occurring in at least one of the nine USGS quadrangles containing or surrounding the study area. All of these species were determined to be absent from the study area for at least one of the following reasons: (1) lack of suitable habitat types; (2) absence of specific microhabitat or edaphic requirements, such as serpentine soils; (3) the elevation range of the species is outside of the range within the study area; and/or (4) the species is considered extirpated from the site vicinity. Due to the current and historic land use of the study area, as well as the surrounding developed land use, no suitable habitat is present in the study area and we can rule out potential for any special-status plant species to occur.

5.2 Special-Status Animal Species

The legal status and likelihood of occurrence on the project site of special-status animals known to occur, or potentially occurring, in the surrounding region are presented in Table 1, and Figure 6 depicts the CNDDB-mapped locations of special-status animals in the project vicinity. Analysis of the documented habitat requirements and occurrence records associated with the species in Table 1 considered allowed us to reject nearly all of the species as having no reasonable potential to occur in or immediately adjacent to the project footprint for at least one of the following reasons: (1) lack of suitable habitat types; (2) absence of specific microhabitat or edaphic requirements, such as serpentine soils; (3) the location of the project site within a developed landscape characterized by extensive commercial and residential development; (4) the lack of connectivity to higher-quality habitat; and/or (5) extirpation of the species from the vicinity.

Special-status fish species present in the South Bay and some of its tributaries include two federally threatened species, the green sturgeon (*Acipenser medirostris*) and the Central California Coast steelhead (*Oncorhynchus mykiss*), along with the longfin smelt (*Spirinchus thaleichthys*), listed as threatened under the California Endangered Species Act (CESA), and the Central Valley fall-run Chinook salmon (*Oncorhynchus tshawytscha*), a California Species of Special Concern (CSSC). However, none of these special-status fish species are expected to occur in the project study area because the channel is not tidally influenced, is intermittent, and is too shallow to support habitat for any of these species. Moreover, there is no spawning habitat or higher-quality habitat for any of these species upstream of the project study area.

Likewise, the absence of salt marsh and the isolation of the study area from South Bay marshes precludes the presence of four special-status species known to occur in salt marsh habitat–the federally and state endangered salt marsh harvest mouse (*Reithrodontomys raviventris*); the federally and state endangered California Ridgway's rail (*Rallus obsoletus obsoletus*); the state threatened California black rail (*Laterallus jamaicensis coturniculus*); and the salt marsh wandering shrew (*Sorex vagrans halicoetes*), a CSSC.

Three special status amphibian species – the California red-legged frog (*Rana draytonii*), which is federally threatened and also a CSSC; the foothill yellow-legged frog (*Rana boylii*), which is federally listed as threatened and state-listed as endangered; and the California tiger salamander (*Ambystoma californiense*), which is both

Table 1. Special-status Animal Species, Their Status, and Potential Occurrence on the Project Site

Name	*Status	Habitat	Potential for Occurrence on the Project Site
Federal or State Endangered, Threatened, or Candidate Species			
Crotch's bumble bee (*Bombus crotchii*)	SC	Open grassland and scrub habitats with abundant flowers providing nectar and pollen and with subterranean nest sites (such as animal burrows).	**Absent.** Concern over possible population declines and range contractions led CDFW (2019) to consider this species a candidate for listing under CESA. However, since 2019, there have been documented occurrences of 70-80 individuals from nearly 20 locations in Santa Clara County (Bumble Bee Watch 2023, iNaturalist 2023, S. Rottenborn, pers. obs.), indicating that the species is still extant, and fairly widespread (albeit in low numbers in most locations) in the county. The project site does not provide high-quality habitat for this species due to the low densities of flowering plants and absence of high-quality nest sites such as small mammal burrows. Given the extensively urbanized surroundings of the project site and absence of high-quality habitat, this species is not expected to occur on the site at all. Determined to be absent.
Monarch butterfly (*Danaus plexippus*)	FC	Requires milkweeds (*Asclepias* spp.) for egg-laying and larval development, but adults obtain nectar from a wide variety of flowering plants in many habitats. Individuals congregate in winter roosts, primarily in Mexico and in widely scattered locations on the central and southern California coast.	**Absent as Breeder.** The monarch butterfly occurs in the South Bay as a widespread migrant, and occasional migrants are expected to fly through the project area. Some individuals may also forage for nectar on flowering plants. However, no milkweeds were observed in the project area during site surveys, so the species would not breed on the project site. Further, the species is not known to form large wintering aggregations in Santa Clara County.
California tiger salamander (*Ambystoma californiense*)	FT, ST	Vernal or temporary pools in annual grasslands or open woodlands. Adults live terrestrially in small mammal burrows.	**Absent.** Suitable breeding habitat is absent from the project site, and the species is not known to occur in the surrounding vicinity (CNDDB 2023). The site is isolated from higher-quality habitat and areas of potential occurrence by intensive urban development. Determined to be absent.
California red-legged frog (*Rana draytonii*)	FT, CSSC	Streams, freshwater pools, and ponds with emergent or overhanging vegetation.	**Absent.** No suitable breeding, foraging, or dispersal habitat is present on the project site and the species is not known to occur in the surrounding vicinity (CNDDB 2023). The site is isolated from higher-quality habitat and areas of potential occurrence by intensive urban development. Determined to be absent.

Name	*Status	Habitat	Potential for Occurrence on the Project Site
Foothill yellow-legged frog (*Rana boylii*)	FT, SE	Partially shaded shallow streams and riffles with a rocky substrate. Occurs in a variety of habitats in coast ranges.	**Absent.** No suitable breeding, dispersal, or foraging habitat for this species is present on the and there are no recent records of the species in the surrounding vicinity (CNDDB 2023). The site is isolated from higher-quality habitat and areas of potential occurrence by intensive urban development. Determined to be absent.
Northwestern pond turtle (*Actinemys marmorata*)	FP, CSSC	Permanent or nearly permanent water in a variety of habitats.	**Absent as Breeder.** No northwestern pond turtles were observed during our July 9, 2021 site visit, but individuals of this long-lived species still occur in urban streams and ponds in the Santa Clara Valley, and it is possible, although unlikely, that one or two individual northwestern pond turtles could occur in the study area. The nearest known occurrence is from Upper Penitencia Creek (which is not directly connected to Penitencia East Channel) approximately 2.5 miles southeast of the site (CNDDB 2023). Suitable habitat for the northwestern pond turtle consists of ponds or instream pools (i.e., slack water environments) with available basking sites, such as logs, and nearby upland areas with clay or silty soils for nesting, and shallow aquatic habitat with emergent vegetation and invertebrate prey for juveniles (Jennings and Hayes 1994). The study area does not contain any ponds or instream pools, and potential basking sites were not detected. Moreover, essentially all of the nearby upland areas have been converted to commercial or residential development, further reducing the likelihood that a turtle would attempt to nest in the study area. Therefore, if an individual pond turtle does occur, it would most likely occur as a dispersing individual.
Alameda whipsnake (*Masticophis lateralis euryxanthus*)	FT, ST	Primarily associated with scrub and chaparral, but may also occur in grasslands, especially those with rock outcrops.	**Absent.** No suitable habitat for the Alameda whipsnake occurs on the project site. The site is isolated from higher-quality habitat and areas of potential occurrence by intensive urban development. Determined to be absent.

Name	*Status	Habitat	Potential for Occurrence on the Project Site
Bald eagle (*Haliaeetus leucocephalus*)	SE, SP	Occurs mainly along seacoasts, rivers, and lakes; nests in tall trees or in cliffs, occasionally on electrical towers. Feeds mostly on fish.	**Absent.** No suitable nesting or foraging habitat for bald eagles is present on the project site. A pair has nested for several years near Curtner Elementary School 2.6 miles north/northwest of the project site (Cornell Lab of Ornithology 2023), and individuals may fly over the site on occasion, but they are not expected to use the site itself due to the absence of suitable foraging habitat. Determined to be absent.
California Species of Special Concern			
Southern coastal roach (*Hesperoleucus venustus subditus*)	CSSC	Generally found in small streams, they are well adapted to intermittent watercourses (e.g., tolerant of high temperatures and low oxygen levels).	**Likely Absent.** The reach of Penitencia East Channel on the project site supports intermittent flow, and a drop in elevation downstream from the project site separates this reach from a perennial reach downstream. Although the southern coastal roach likely occurs in the perennial reach, there is a low probability that it occurs in the project reach (it might occur only during very high flows that allow passage upstream to the project site, but such flows may involve flow rates too fast for these small fish to move upstream).
Sacramento hitch (*Lavinia exilicauda exilicauda*)	CSSC	Occurs in warm, lowland, waters including clear streams, turbid sloughs, lakes, and reservoirs. Has a high tolerance for varying stream conditions and water temperature.	**Likely Absent.** The reach of Penitencia East Channel on the project site supports intermittent flow, and a drop in elevation downstream from the project site separates this reach from a perennial reach downstream. Although the southern coastal roach likely occurs in the perennial reach, there is a low probability that it occurs in the project reach (it might occur only during very high flows that allow passage upstream to the project site, but such flows may involve flow rates too fast for these small fish to move upstream).

Name	*Status	Habitat	Potential for Occurrence on the Project Site
Burrowing owl (*Athene cunicularia*)	CSSC	Nests and roosts in open grasslands and ruderal habitats with suitable burrows, usually those made by California ground squirrels.	**Absent.** No burrows of California ground squirrels to provide nesting and roosting habitat for this species were observed on the site or in surrounding areas during the July 9, 2021 survey. The site does not provide suitable foraging habitat given the limited nature of vegetation and the expected paucity of prey. The nearest area where this species currently breeds is on San Jose-Santa Clara Regional Wastewater Facility buffer lands approximately 3.6 miles northwest of the project site (Talon Ecological Research Group 2023), but due to the absence of suitable habitat, this species is not expected to nest, roost, or forage on the project site. Determined to be absent.
San Francisco common yellowthroat (*Geothlypis trichas sinuosa*)	CSSC	Occupies wooded riparian areas, and nests in herbaceous vegetation, usually in wetlands or moist floodplains.	**Absent as Breeder.** No San Francisco common yellowthroats were observed during our July 9, 2021 site visit, and we do not expect this species to nest in or immediately adjacent to the project footprint. The scattered patches of emergent marsh vegetation are too small and too fragmented, and relatively isolated from other patches of larger, contiguous patches of salt marsh habitat where this species is known to occur in the South Bay. However, there is some potential for the species to nest in the perennial reach of the creek well downstream from the project site, and small numbers of dispersing individuals of this species could occasionally forage in the vegetation in and on the banks of the creek on the project site.
Yellow warbler (*Setophaga petechia*)	CSSC (nesting)	Nests in riparian woodlands.	**Absent as Breeder.** No suitable riparian habitat is present on or adjacent to the project site to provide suitable nesting habitat for this species. Nonbreeding individuals will forage in trees and other vegetation on and adjacent to the site during migration.
Western red bat (*Lasiurus blossevillii*)	CSSC	Roosts in foliage in forest or woodlands, especially in or near riparian habitat.	**Absent.** No suitable habitat is present in or adjacent to the project site. Determined to be absent.

Name	*Status	Habitat	Potential for Occurrence on the Project Site
Pallid bat (*Antrozous pallidus*)	CSSC	Forages over many habitats; roosts in caves, rock outcrops, buildings, and hollow trees.	**Absent.** No bats or signs of bat presence, nor any suitable roost sites, were detected in trees or buildings on or adjacent to the project site during the July 9, 2021 survey. Determined to be absent.
Townsend's big-eared bat (*Corynorhinus townsendii*)	CSSC	Roosts in caves and mine tunnels, and occasionally in deep crevices in trees such as redwoods or in abandoned buildings, in a variety of habitats.	**Absent.** No suitable cavernous roosting habitat is present on or adjacent to the project site. Determined to be absent.
San Francisco dusky-footed woodrat (*Neotoma fuscipes annectens*)	CSSC	Nests in a variety of habitats including riparian areas, oak woodlands, and scrub.	**Absent.** No nests of this species were detected on or adjacent to the site during the July 9, 2021 survey, and no suitable habitat is present. Determined to be absent.
American badger (*Taxidea taxus*)	CSSC	Burrows in grasslands and occasionally in infrequently disked agricultural areas.	**Absent.** No suitable habitat is present on the project site, and the site is isolated from suitable habitat by intensive urban development. Determined to be absent.
State Fully Protected Species			
Golden eagle (*Aquila chrysaetos*)	SP	Breeds on cliffs or in large trees (rarely on electrical towers); forages in open areas.	**Absent.** No suitable nesting habitat for golden eagles is present within the study area. The species is not known or expected to forage on the site due to a lack of suitable habitat and the highly urbanized surrounding context. Determined to be absent.
White-tailed kite (*Elanus leucurus*)	SP	Nests in tall shrubs and trees; forages in grasslands, marshes, and ruderal habitats.	**Absent.** Suitable nesting and foraging habitat is not present on the project site. The species is not known or expected to forage on the site due to the highly urbanized surrounding context. Determined to be absent.

Key to Abbreviations:

Status: Federally Proposed (FP); Federally Threatened (FT); Federal Candidate (FC); State Endangered (SE); State Threatened (ST); State Fully Protected (SP); State Candidate (SC); California Species of Special Concern (CSSC).

federally and state threatened, do not occur in the study area or on the valley floor. The foothill yellow-legged frog occurs in upper-watershed areas, along cobbly streams, and is absent from the Santa Clara Valley floor. Populations of the California tiger salamander located on the valley floor have been extirpated due to habitat loss, and the species is now considered absent from the majority of the valley floor, including the study area and the surrounding vicinity (H. T. Harvey & Associates 1999, 2011; Valley Water 2011). Populations of the red-legged frog located on the valley floor have been extirpated due to habitat loss and the introduction of non-native predators such as non-native fishes and bullfrogs. Like the tiger salamander, the red-legged frog is now considered absent from the majority of the valley floor, including the project study area and the surrounding vicinity (H. T. Harvey & Associates 1997; Valley Water 2011).

Other special-status species known from the region, but absent from the project site due to a lack of suitable habitat, restricted range, and/or isolation of the site from populations by urbanization, include the Crotch's bumble bee (*Bombus crotchii*), Alameda whipsnake (*Masticophis lateralis euryxanthus*), western red bat (*Lasiurus blossevillii*), pallid bat (*Antrozous pallidus*), Townsend's big-eared bat (*Corynorhinus townsendii*), San Francisco dusky-footed woodrat (*Neotoma fuscipes annectens*), American badger (*Taxidea taxus*), golden eagle (*Aquila chrysaetos*), and white-tailed kite (*Elanus leucurus*).

A pair of bald eagles (*Haliaeetus leucocephalus*) breeds near Curtner Elementary School 2.6 miles north/northwest of the project site, and burrowing owl (*Athene cunicularia*) breed as close as 3.5 miles to the northwest on San Jose-Santa Clara Regional Wastewater Facility buffer lands. However due to the absence of suitable habitat, neither species would use the site or nearby areas for nesting, roosting, or foraging.

Four special-status species, the monarch butterfly, northwestern pond turtle (*Actinemys marmorata*), San Francisco common yellowthroat (*Geothlypis trichas sinuosa*), and yellow warbler (*Setophaga petechia*), have some potential to occur in the project footprint as nonbreeders. The monarch butterfly is expected to occur in the project area as an occasional migrant, but because its larval host plant is absent from the site, the species would not breed in the project area. High-quality northwestern pond turtle habitat, consisting of ponds or instream pools, is absent from the project site, and the intermittent nature of the stream within the project footprint limits the availability of open-water foraging and dispersal habitat for this species. Moreover, essentially all of the nearby areas have been converted to commercial or residential development, limiting the availability of nesting habitat and further reducing the likelihood that a turtle would be found in the study area. The San Francisco common yellowthroat is not expected to nest on the site owing to the sparse nature of vegetation (especially wetland vegetation) along the stream channel. Both the northwestern pond turtle and San Francisco common yellowthroat are more likely to occur in the perennial reach of the creek downstream from the project site, and it is possible that individuals of this species could disperse onto the project site on rare occasions. However, they would occur on the site infrequently and in low numbers, if at all. The yellow warbler would not breed or near the project site due to the absence of suitable riparian habitat, but occasional migrants could forage in trees or other vegetation on or adjacent to the site.

5.3 Sensitive Natural Communities, Vegetation Alliances, and Habitats

Natural communities have been considered part of the Natural Heritage Conservation triad, along with plants and animals of conservation significance, since the state inception of the Natural Heritage Program in 1979. CDFW determines the level of rarity and imperilment of vegetation types, and tracks sensitive communities in its Rarefind database (CNDDB 2023). Global rankings (G) of natural communities reflect the overall condition (rarity and endangerment) of a habitat throughout its range, whereas state (S) rankings are a reflection of the condition of a habitat within California. Natural communities are defined using NatureServe's standard heritage program methodology as follows (Faber-Langendoen et al. 2012):

G1/S1: Critically imperiled.

G2/S2: Imperiled.

G3/S3: Vulnerable.

G4/S4: Apparently secure.

G5/S4: Secure.

In addition to tracking sensitive natural communities, CDFW also ranks vegetation alliances, defined by repeating patterns of plants across a landscape that reflect climate, soil, water, disturbance, and other environmental factors (CDFW 2023). If an alliance is marked G1-G3, all of the vegetation associations within it will also be of high priority. CDFW provides the Vegetation Classification and Mapping Program's (VegCAMP) currently accepted list of vegetation alliances and associations (CDFW 2023).

Impacts on CDFW sensitive natural communities, vegetation alliances/associations, or any such community identified in local or regional plans, policies, and regulations, must be considered and evaluated under CEQA (Title 14, Division 6, Chapter 3, Appendix G of the California Code of Regulations). Furthermore, aquatic, wetland and riparian habitats are also protected under applicable federal, state, or local regulations, and are generally subject to regulation, protection, or consideration by the USACE, RWQCB, CDFW, and/or the USFWS.

5.3.1 Sensitive Natural Communities

A query of sensitive habitats in Rarefind (CNDDB 2023) identified two sensitive habitat types as occurring within the nine USGS quadrangles containing or surrounding study area: northern coastal salt marsh (Rank G3/S3) and sycamore alluvial woodland (Rank G1/S1.1). Northern coastal salt marsh, is characterized by Holland (1986) as occurring along sheltered inland margins of bays, often co-dominated by pickleweed (*Salicornia* spp.), California cordgrass (*Spartina foliosa*), and sometimes saltgrass (*Distichlis spicata*). None of these species and no salt marsh habitats were observed in the study area. Riparian habitats within the study area do

not meet the definition of sycamore alluvial woodland, which is dominated by western sycamore (*Platanus racemosa*), and occurs within braided, depositional channels of intermittent streams, usually with cobble or boulder substrate (Holland 1986).

5.3.2 Sensitive Vegetation Alliances

The intermittent stream/freshwater marsh in the study area is dominated by non-native species, such as water plantain, barnyard grass, tall cyperus, and tall willowherb. The riparian annual grassland is also dominated by non-native species such as wild oats, Italian thistle, and prickly lettuce. Neither habitat type closely align with any designated Alliances as described in the Vegetation Classification and Mapping Program (CDFW 2023). These are all non-native dominated habitats and do not compose a vegetation alliance that would be considered sensitive. Therefore, no sensitive vegetation alliances are present on the project site.

5.3.3 Sensitive Habitats (Waters of the U.S./State)

As described above under Section 3.1.1, Penitencia East Channel is considered waters of the U.S./state up to the OHWM lines. Jurisdictional riparian buffers for waters of the state in the study area would likely extend up to the top of bank lines of the channel.

5.3.4 CDFW Riparian Habitat

Due to its rarity and disproportionately high habitat values and functions to wildlife, CDFW considers even lower quality riparian habitat to be sensitive. As described above in Section 3.2.4, the CDFW would likely claim jurisdiction over areas at, and below, the top of bank lines on either side of Penitencia East Channel regardless of the vegetative composition of these areas. No riparian habitat (e.g., riparian trees) is present above the top of bank in the study area.

5.3.5 Nonnative and Invasive Species

Several nonnative, invasive plant species occur in the study area. Of these, the following have a rating of "limited" invasiveness (considered invasive but their ecological impacts are minor on a statewide level and their reproductive biology and other attributes result in low to moderate rates of invasiveness) according to the California Invasive Plant Council (Cal-IPC) (2023): bristly ox-tongue, wild radish, variable burclover, curly dock, date palm, rabbitfoot grass, and smilo grass. The following species have a "moderate" rating, indicating that they have substantial and apparent-but generally not severe-ecological impacts on physical processes, plant and animal communities, and vegetation structure, and that their reproductive biology and other attributes are conducive to moderate to high rates of dispersal, though establishment would be generally dependent upon ecological disturbance: Italian thistle, wild oats, ripgut brome, Bermuda grass, and Italian rye grass. Species with a "high" invasive rating by the Cal-IPC have the potential to cause severe ecological impacts on physical processes, plant and animal communities, and vegetation structure. Their reproductive biology and other attributes are conducive to moderate to high rates of dispersal and establishment, and most are widely distributed ecologically. Within the study area no species with a "high" rating were observed. Cal-IPC rating for each species is listed in Appendix A.

Section 6. Impacts and Mitigation Measures

The State CEQA Guidelines provide direction for evaluating the impacts of projects on biological resources and determining which impacts will be significant. CEQA defines a "significant effect on the environment" as "a substantial adverse change in the physical conditions which exist in the area affected by the proposed project." Under State CEQA Guidelines Section 15065, a project's impacts on biological resources are deemed significant if the project would:

A. "substantially reduce the habitat of a fish or wildlife species"

B. "cause a fish or wildlife population to drop below self-sustaining levels"

C. "threaten to eliminate a plant or animal community"

D. "reduce the number or restrict the range of a rare or endangered plant or animal"

In addition to the Section 15065 criteria that trigger mandatory findings of significance, Appendix G of State CEQA Guidelines provides a checklist of other potential impacts to consider when analyzing the significance of project effects. The impacts listed in Appendix G may or may not be significant, depending on the level of the impact. For biological resources, these impacts include whether the project would:

A. "have a substantial adverse effect, either directly or through habitat modifications, on any species identified as a candidate, sensitive, or special status species in local or regional plans, policies, or regulations, or by the California Department of Fish and Game or U.S. Fish and Wildlife Service"

B. "have a substantial adverse effect on any riparian habitat or other sensitive natural community identified in local or regional plans, policies, regulations or by the California Department of Fish and Game or U.S. Fish and Wildlife Service"

C. "have a substantial adverse effect on state or federally protected wetlands as defined by Section 404 of the Clean Water Act"

D. "interfere substantially with the movement of any native resident or migratory fish or wildlife species or with established native resident or migratory wildlife corridors, or impede the use of native wildlife nursery sites"

E. "conflict with any local policies or ordinances protecting biological resources, such as a tree preservation policy or ordinance"

F. "conflict with the provisions of an adopted Habitat Conservation Plan, Natural Community Conservation Plan, or other approved local, regional, or state habitat conservation plan"

Potential impacts on existing biological resources were evaluated by comparing the quantity and quality of habitats present on the project site under baseline conditions to the anticipated conditions after implementation of the proposed project. Direct and indirect impacts on special-status species and sensitive natural communities

were assessed based on the potential for the species, their habitat, or the natural community in question to be disturbed or enhanced following implementation of the proposed project.

6.1 Impacts on Special-Status Species: Have a substantial adverse effect, either directly or through habitat modifications, on any species identified as a candidate, sensitive, or special-status species in local or regional plans, policies, or regulations, or by the CDFW or USFWS (Less than Significant)

6.1.1 Impacts on Developed/Landscaped Habitat and Associated Common Plant and Wildlife Species (Less than Significant)

The proposed project will permanently redevelop 0.74 acre of developed/landscaped habitat in the study area (Figure 4). Permanent impacts would occur as a result of the demolition of the building south of Penitencia East Channel and construction of the road extension of South Milpitas Boulevard, vehicular ramps connecting the Valley Water maintenance roads to the road extension, a vehicular bridge over Penitencia East Channel, and the Tarob Road Connection. Project construction will temporarily impact 0.34 acre of developed/landscaped habitat (Figure 4). The developed/landscaped habitat on the site is not sensitive or valuable from the perspective of providing important plant or wildlife habitat. Therefore, impacts on these habitats would not be considered significant under CEQA.

As discussed previously, the project site currently supports a number of common wildlife species, although due to its largely developed nature, the site provides relatively low-quality habitat for most species and thus supports relatively small numbers of individuals of any one species. The common wildlife species that occur on the site are regionally abundant, are present in widely available habitats in the region, and will continue to be present on the site following construction. Additionally, the project would impact only a small proportion of their regional populations, and the number of individuals likely to be displaced by habitat disturbance and loss would be quite small with respect to the amount of suitable habitat available in the area. Also, landscaping proposed by the project would provide resources useful to some common wildlife species. Thus, impacts on most common species and their habitats resulting from the implementation of the project would not meet the threshold of having a substantial adverse effect, and would not be considered significant under CEQA.

The plant species observed on the project site during the reconnaissance-level survey (Appendix A) are not regulated under state or federal laws and are not listed as rare by the CNPS. All native plant species found or with any potential to occur on the site were regionally abundant and common in California. Therefore, implementation of the project would not have a substantial adverse effect on common plant species and impacts on such species would not be considered significant under CEQA.

6.1.2 Impacts on Special-Status Plant Species (No Impact)

As described above, no special-status plant species are considered to have potential to occur on or adjacent to the study area. As a result, the proposed project will have no impact on special-status plant species.

6.1.3 Impacts on Water Quality, Native Fish, and Northwestern Pond Turtles (Less than Significant with Mitigation)

Construction of the new bridge will necessitate work within the bed and banks of the Penitencia East Channel. Falsework may need to be installed in the channel to facilitate construction of the bridge, and if water is present when construction needs to commence, diversion of flow in the channel and dewatering of the construction area would need to occur. No special-status fish, and possibly no native fish at all, occur in the reach of Penitencia East Channel where the project is located. Therefore, it is unlikely that flow diversion and dewatering would affect movement of fish along the channel or trap fish within the dewatering area. Similarly, northwestern pond turtles are not expected to breed or occur frequently on or near the project site. There is a very low potential for northwestern pond turtles to occur, and if the species occurs in the project area at all, it would occur as an irregular dispersant. Nevertheless, if water is present in the channel when work needs to occur, there is at least a low potential for northwestern pond turtles or native fish (e.g., if high winter flows allowed fish to move upstream) to be present in the work area. Dewatering could result in the loss of native fish to desiccation or turtles due to movement of vehicles and equipment.

In addition, the project could result in indirect impacts on water quality in reaches of Penitencia East Channel further downstream, where fish and northwestern pond turtles are more likely to occur. Indirect impacts on water quality from construction of the project would be avoided and minimized by implementing erosion and sediment control measures, as well as BMPs for work near aquatic environments.

Construction projects in California causing land disturbances that are equal to 1 acre or greater must comply with state requirements to control the discharge of stormwater pollutants under the NPDES General Permit for Storm Water Discharges Associated with Construction and Land Disturbance Activities (Construction General Permit; Water Board Order No. 2009-0009-DWQ, as amended). Prior to the start of construction/demolition, a Notice of Intent must be filed with the State Water Board describing the project. A Storm Water Pollution Prevention Plan must be developed and maintained during the project and it must include the use of BMPs to protect water quality until the site is stabilized. Standard permit conditions under the Construction General Permit require that the applicant utilize various measures including: on-site sediment control BMPs, damp street sweeping, temporary cover of disturbed land surfaces to control erosion during construction, and utilization of stabilized construction entrances and/or wash racks, among other factors.

In many Bay Area counties, including Santa Clara County, projects must also comply with the California Regional Water Quality Control Board, San Francisco Bay Region, Municipal Regional Stormwater National Pollutant Discharge Elimination System Permit (Water Board Order No. R2-2015-0049). This permit requires that all projects implement BMPs and incorporate Low Impact Development practices into the design to prevent stormwater runoff pollution, promote infiltration, and hold/slow down the volume of water coming from a site after construction has been completed. In order to meet these permit and policy requirements, projects must incorporate the use of green roofs, impervious surfaces, tree planters, grassy swales, bioretention and/or detention basins, among other factors.

In the absence of avoidance and minimization measures, project activities could similarly result in impacts on special-status fish and northwestern pond turtles in the Penitencia East Channel or other waters downstream from the project site due to a temporary increase in erosion, sedimentation, and turbidity in aquatic habitats located downstream of the work area. Additionally, minor spills of petrochemicals, hydraulic fluids, and solvents may occur during vehicle and equipment refueling. Such leaks/spills could adversely affect water quality downstream of construction activities. However, compliance with permit conditions to protect water quality, as described above, will minimize the potential for impacts to water quality due to increases in erosion, sedimentation, and turbidity as well as releases of pollutants into the creek water. These measures will also minimize the release or pollutants to waters in the Penitencia East Channel, thereby protecting water quality in the river. Therefore, project activities are not expected to result in substantial adverse indirect effects on water in the Penitencia East Channel.

Implementation of Mitigation Measures BIO-1, BIO-2, and BIO-3 will reduce impacts on native fish and northwestern pond turtles to less than significant levels by ensuring that individual native fish and northwestern pond turtles are not trapped or otherwise impacted by the project.

Mitigation Measure BIO-1. Worker Environmental Awareness Program. All construction personnel working on the bridge will participate in a worker environmental awareness program. These personnel will be informed about the potential presence of native fish and northwestern pond turtles within and downstream from the project site. Prior to construction activities, a qualified biologist will instruct all construction personnel about (1) the description and status of these species; (2) the importance of their associated habitats; (3) a list of measures being taken to reduce impacts on these species during project construction; and (4) procedures to be followed if a northwestern pond turtle is observed by construction personnel in or near the project area during construction. If construction personnel observe any turtle in an area where it is at risk of injury or mortality due to the project, or where construction activity could prevent the turtle from returning to perennial habitat downstream from the project site, they will contact a qualified biologist immediately. All project activities that could impact the turtle will stop until the biologist has arrived at the site and determined whether the turtle is a northwestern pond turtle and (with any necessary USFWS approval) relocated the turtle to an appropriate location downstream.

Mitigation Measure BIO-2. Preconstruction Survey and Fish Exclusion Prior to Dewatering Activities. Prior to conducting dewatering activities, a qualified biologist will conduct a survey of the project area to look for fish and northwestern pond turtles. If any northwestern pond turtles are detected in areas where they are at risk of injury or mortality due to the project, or where construction activity could prevent the turtles from returning to perennial habitat downstream from the project site, the biologist will relocate the turtles to suitable habitat in the perennial reach of Penitencia East Channel downstream. If northwestern pond turtle has been listed by the USFWS under FESA by the time construction occurs, the biologist will handle/relocate individual turtles only with USFWS approval.

During the preconstruction survey, the biologist will determine whether there is any potential for native fish to be present in the project area based on presence/absence and depth of water. If any fish are or have the

potential to be present in the on-site segment of creek channel, and if continuous flow is present from the project site downstream to the perennial reach of creek, the biologist will use block nets to exclude fish from the reach to be dewatered. A block net will be placed at the upper end of the reach to be dewatered. Subsequently, qualified biologists will walk from the upper to lower end of the reach with a seine stretched across the channel to encourage fish to move out of the construction area. When the lower end of the construction area is reached, a second block net will be installed to isolate the construction reach. This procedure will be repeated as needed until no fish remain in the construction area. If surface water is not continuous between the project site and the perennial reach downstream, so that fish excluded from the site are unable to reach suitable habitat downstream, then the qualified biologist will capture native fish using appropriate methods and immediately release them in the perennial reach of the channel downstream.

Mitigation Measure BIO-3. Maintenance of Flow through the Site. In the unlikely event that fish are present within the channel when construction occurs, continuous flow will be maintained through the project site (e.g., in a temporary pipe) so that any fish upstream from the site are able to disperse downstream.

6.1.4 Impacts on Wildlife due to Increased Lighting (Less than Significant with Mitigation)

Many animals are sensitive to light cues, which influence their physiology and shape their behaviors, particularly during the breeding season (Ringer 1972, de Molenaar et al. 2006). Artificial light has been used as a means of manipulating breeding behavior and productivity in captive birds for decades (de Molenaar et al. 2006), and has been shown to influence the territorial singing behavior of wild birds (Longcore and Rich 2004, Miller 2006, de Molenaar et al. 2006). While it is difficult to extrapolate results of experiments on captive birds to wild populations, it is known that photoperiod (the relative amount of light and dark in a 24-hour period) is an essential cue triggering physiological processes as diverse as growth, metabolism, development, breeding behavior, and molting (de Molenaar et al. 2006). This holds true for birds, mammals (Beier 2006), and other taxa as well, suggesting that increases in ambient light may interfere with these processes across a wide range of species, resulting in impacts on wildlife populations.

Artificial lighting may indirectly impact mammals and birds by increasing the nocturnal activity of predators like owls, hawks, and mammalian predators (Negro et al. 2000, Longcore and Rich 2004, DeCandido and Allen 2006, Beier 2006). The presence of artificial light may also influence habitat use by rodents (Beier 2006) and by breeding birds (Rogers et al. 2006, de Molenaar et al. 2006), by causing avoidance of well-lit areas, resulting in a net loss of habitat availability and quality.

Artificial lighting may also indirectly affect fish. For example, an increase in illuminance at night can alter the nighttime activities of predators and prey, such as disturbing the seasonal and diel light cycles of freshwater invertebrates that fish feed on in riverine systems, by disrupting their nocturnal drift periods, which is timed with lower predation risk periods (Flecker 1992, Miyasaka and Nakano 2001, Hernandez and Peckarsky 2014). This can reduce the nocturnal drift activity by freshwater invertebrates and potentially reduce the availability of prey for foraging fish species in the river. In addition, an increase in nighttime illuminance can disrupt the temporal and spatial movement patterns of young (fry) fish that typically disperse and migrate at night to

decrease their risk of predation (Scheuerell and Schindler 2003, Stich et al. 2015, Zapata et al 2019). Numerous studies have shown that an increase in nighttime illuminance on bodies of water can inhibit foraging activity, increase predation risk on fish, as well as significantly change the composition of fish communities that occur across a day-night period (Riley et al. 2013, Zapata et al. 2014).

Although the literature has shown how an increase in artificial lighting may indirectly affect birds, mammals, fish, and nesting sea turtles, little is known about potential effects of artificial lighting on many species of amphibians and reptiles, including freshwater turtles (Perry et al. 2008). Northwestern pond turtles most likely exhibit physiological and behavioral responses in the presence of novel artificial light sources. However, few studies have revealed any conclusive data on what the impacts may be from artificial lighting in urban environments on adjacent habitats where freshwater turtles may occur (Perry et al 2008). To our knowledge, no specific studies have been conducted that have attempted to elucidate pond turtle responses to an increase in artificial lighting conditions in their natural aquatic habitats. Northwestern pond turtles are primarily active during the day, spending the majority of their time basking on haul-out structures, such as patches of floating vegetation and logs near the edges or in the middle of their aquatic habitats, where they can quickly escape if threatened (Jennings and Hayes 1994). Some crepuscular and nocturnal movements have been observed by the species, but pond turtles typically take refuge at the bottom of aquatic habitats, burying themselves in muddy bottoms or dense vegetation during the night, and thus, in our opinion, would not be significantly affected by an increase in artificial light conditions.

The project will construct lighting on a bridge that will increase the amount of light within and around the project site. Based on the project's lighting plans, this lighting could potentially spill into the adjacent Penitencia East Channel, thereby resulting in an increase in lighting compared to existing conditions. If the lighting is excessive, or pointed upwards, nocturnal migrant birds may also be adversely affected.

The species inhabiting the sensitive habitats along the Penitencia East Channel are already habituated to the existing artificial illuminance from a variety of urban and natural light sources that are found on the site and nearby. As mentioned previously, fish are unlikely to be present in the segment of channel that includes the project site due to the intermittent nature of stream flow. If fish are present at all, they would be present only briefly during high flows, when fish from downstream areas could swim upstream and temporarily occur in the project vicinity. Similarly, northwestern pond turtles are expected to occur in the project area only as rare dispersants, if they occur at all. The bridge is far enough from areas providing more regular flow downstream that lighting from the project is not expected to adversely affect animals in perennial segments downstream.

Nevertheless, due to the ecological importance of wetland and stream habitats, substantial increases in illuminance of the Penitencia East Channel and its associated aquatic and wetland habitats could result in a potentially significant impact under CEQA by disrupting the natural behaviors of the species using these habitats. Although there is agreement throughout the literature that increases in illuminance can affect wildlife behavior, as described above, there is no quantitative level of illuminance increase (above ambient light) that is agreed upon as a threshold for significant impacts to animals. In our professional opinion, Mitigation Measures

BIO-4 and BIO-5 below, which focus on shielding and minimizing spillover of lighting into the Penitencia East Channel as part of the project, would reduce this impact to a less-than-significant level under CEQA.

Mitigation Measure BIO-4. Minimization and Shielding of Lighting. All lighting for vehicular and pedestrian safety shall be minimized to the extent feasible (i.e., shall be no brighter than necessary for safety purposes), shall be oriented toward the bridge rather than outwards toward the Penitencia East Channel, and shall be fully shielded to block illumination from shining upward or outward toward the creek channel.

Mitigation Measure BIO-5. Review of the Lighting Plan. If lighting is incorporated into the bridge railings (e.g., as a component of proposed artwork), the lighting plan shall be reviewed by a qualified biologist to ensure that the directionality and magnitude of lighting would not be so great as to result in adverse effects on wildlife from the perspective of disturbing wildlife in adjacent areas or attracting/disorienting nocturnal migrant birds. The biologist will make this determination by evaluating whether bright lighting is oriented upward or outward toward the creek channel (which should be avoided), and by working with the project's designers and lighting specialists to ensure that the bridge does not appear as a "beacon", being substantially brighter than ambient lighting in surrounding areas.

6.1.5 Impacts on the San Francisco Common Yellowthroat and Yellow Warbler (Less than Significant)

The San Francisco common yellowthroat and yellow warbler potentially occur on the project site as nonbreeding migrants, transients, or foragers, but they are not known or expected to breed or occur in large numbers on or near the project site. At most, a few individuals of each of these species could occasionally forage on the project site. Proposed project activities would not result in the injury or mortality of individuals of any of these species, as they are mobile enough to avoid construction equipment. Because these species do not breed on the site, project activities will not affect breeding habitat or vulnerable young of these species. Therefore, the project is not expected to result in the injury or mortality of individuals of these species. At most, the project may result in the disturbance of a few foraging individuals and loss of a relatively limited extent of foraging habitat.

6.1.6 Impacts on Nesting Birds (Less than Significant)

Construction disturbance during the bird nesting season (February 1 through August 31, for most species) could result in the incidental loss of eggs or nestlings, either directly through the destruction or disturbance of active nests or indirectly by causing the abandonment of nests. Due to the absence of native or sensitive habitats from the project site, the habitat on the site supports only regionally common, urban-adapted breeding birds, and the numbers that occur on the site (i.e., one to several pairs of each species) represent only a very small proportion of these species' regional populations. In addition, many of these birds are expected to continue to nest and forage on the project site following project construction. Therefore, project impacts on nesting and foraging birds that occur on the site would not rise to the CEQA standard of having a substantial adverse effect, and these impacts are not considered a significant impact under CEQA. However, all native migratory birds,

including raptors, are protected under the California Fish and Game Code[1]. Recommended measures to comply with these laws are provided under Section 7 *Compliance with Additional Laws and Regulations*, below.

6.2 Impacts on Sensitive Communities: Have a substantial adverse effect on any riparian habitat or other sensitive natural community identified in local or regional plans, policies, or regulations, or by the CDFW or USFWS (Less than Significant with Mitigation)

The CDFW defines sensitive natural communities and vegetation alliances using NatureServe's standard heritage program methodology (CDFW 2023), as described above in Section 5.3. Aquatic, wetland, and riparian habitats are also protected under applicable federal, state, or local regulations, and are generally subject to regulation, protection, or consideration by the USACE, RWQCB, CDFW, and/or the USFWS (see Section 6.3 below). Project impacts on sensitive natural communities, vegetation alliances/associations, or any such community identified in local or regional plans, policies, and regulations, were considered and evaluated.

Riparian annual grassland occurs on the banks of Penitencia East Channel. The majority of ground-disturbing project impacts (i.e., project construction) will occur outside the top of banks of Penitencia East Channel, and because the abutments will be placed above top of bank, no permanent loss of riparian jurisdiction (from abutment encroachment) will occur. No riprap or other improvements are proposed to the banks that would prevent future vegetation growth. However, some permanent and temporary impacts to the riparian banks will occur, in the form of shading from the proposed bridge and temporary work within the bed and banks of the channel during bridge construction. The bridge will permanently shade 0.02 acre of riparian annual grassland (Figure 4). Permanently shaded vegetation will weaken, decrease in cover, or even die off leaving bare soil exposed. However, non-native-dominated annual grassland such as this is typically able to persist under some shading. The new bridge will be 8 ft above the banks, allowing for some light to reach the grassy areas under the deck and enough herbaceous growth to stabilize soils and provide similar habitat quality to the existing condition in most if not all of the newly shaded area.

The temporary work area within the channel, where foot traffic by workers may be needed, consists of a 40-foot buffer upstream and downstream of the proposed bridge, temporarily impacting up to 0.03 acre of riparian annual grassland (Figure 4). Within this temporary impact area, dewatering and diversion of flow would be necessary if water is present when construction occurs, and falsework may be placed within the bed and banks of the channel to facilitate bridge construction. Temporary construction disturbance to the vegetated riparian banks and the channel bed could lead to temporal loss of the soil stabilization functions that the riparian grassland provides, causing erosion and sedimentation, which would be significant if not prevented. Denuded

[1] Per a December 22, 2017 memorandum issued by the U.S. Department of the Interior, the MBTA's prohibition on taking migratory birds and their active nests applies only to direct, purposeful actions, and does not include take incidental to other activities, presumably including tree removal. Nevertheless, all native birds and their nests, eggs, or young are protected by the California Fish and Game Code.

banks may also be susceptible to increased or new infestations of weeds from lack of competition or introduction of new weed propagules on equipment used in this habitat.

Work in and near riparian corridors has the potential for indirect impacts as well, for example, spills of equipment fuels or oil that could enter the channel and cause degradation and contamination of the riparian habitat. However, as the project will comply with the Construction General Permit and will have a Stormwater Pollution Prevention Plan, best management practices will be employed to prevent such spills from entering the riparian corridor.

Although the quality of riparian habitat on the project site is very low, riparian habitat provides important functions with respect to protecting water quality and providing habitat for animals. Therefore, project impacts on riparian habitat are significant, in the absence of mitigation measures. Implementation of Mitigation Measures BIO-6 through BIO-9 will reduce impacts to less-than-significant levels.

Mitigation Measure BIO-6. Work Period. Construction work within the stream banks will be confined to the period of June 15 to October 15 (or as otherwise allowed by resource agency permits). Riparian restoration work using hand tools is not confined to this time period but shall be completed within the wet season the same year following completion of the project.

Mitigation Measure BIO-7. Work Area Delineation. The permittee shall clearly show all riparian habitat on project plansets and place flagging around the work limits within the stream, riparian, and wetland areas to prevent inadvertent impacts to areas not proposed to be disturbed by the project. Flagging shall be removed and appropriately disposed of within 5 calendar days of the completion of construction work. Access paths and staging areas shall be adequately temporarily fenced or flagged to prevent damage to adjacent stream, riparian or wetland habitat.

Mitigation Measure BIO-8. Prevention of Spread of Invasive Plant Species. To prevent the spread of invasive weed infestations from source populations found on the project site to sensitive habitats at other work locations, or causing the spread of new infestations within the riparian corridor at this site,

- All ground disturbing equipment used within the riparian corridor will be washed (including tracks, and undercarriages) at a legally operating equipment yard before being brought to the site and, after construction is completed, before being used at another site providing natural habitat.
- All applicable construction materials used on site, such as straw wattles, mulch, and fill material, will be certified weed free.
- Invasive plant species with a "high" ecosystem impact rating by the California Invasive Plant Council (Cal-IPC; http://www.cal-ipc.org/paf/) will be actively monitored and controlled in the first 3 years following completion of construction and revegetation of temporary impact areas. The percent cover of "high" invasive plant species will be maintained at less than ten percent of the total plant cover in areas disturbed by project work. During the monitoring site visits described in Mitigation Measure BIO-6, the qualified

ecologist will assess the type, distribution, and abundance of invasive plant species and recommend effective control measures. Invasive plants will be removed from the project site on an as-needed basis.

Mitigation Measure BIO-9. Revegetation of Temporary Impact Areas. Temporary impact areas within the bed and banks of the channel shall be restored to preconstruction conditions or better. Restoration shall include restoring the topography of temporary impact areas to preconstruction conditions to the extent feasible, bank stabilization, and reestablishment of appropriate vegetation. A habitat-appropriate, weed-free native seed mix or propagated plants shall be applied or installed. Species such as California buckwheat (*Eriogonum fasciculatum*), California fuschia (*Epilobium canum*), coyote brush (*Baccharis pilularis*), purple needlegrass (*Stipa pulchra*), and seaside heliotrope (*Heliotropium curassavicum*) would be appropriate. The project proponent shall not plant, seed, or otherwise introduce invasive exotic plant species. Revegetation shall be completed as soon as possible after grading at the project site is completed. Seeding placed between October 15 and April 15 shall be covered with broadcast straw, jute netting, coconut fiber blanket, or similar erosion control blanket. Erosion control products with monofilament or woven plastic strands shall not be used. The revegetation will be considered successful if the vegetative cover in the temporary impact areas reaches 75% of the existing baseline cover, excluding species rated as "high" by Cal-IPC.

A qualified ecologist will monitor conditions in the temporary riparian and stream/marsh impact areas for a minimum of 3 years, or until the success criteria for vegetation cover are attained, whichever is later. Prior to commencement of construction, the ecologist will establish at least four permanent photographic documentation stations (i.e., one station near each corner of the bridge) to provide representative views of vegetation cover. The locations of the photographic documentation stations will be recorded using a GPS, and the direction of the photographs documented with a compass. The ecologist will prepare site maps with the photo-documentation points clearly marked for the project site. Prior to commencement of construction, the ecologist will photographically document the pre-project condition of the project site from each documentation station and estimate the vegetation cover at each station. Following implementation of the project, including any seeding or plant installation, a qualified ecologist will visit the site at least once in late spring to photographically document the postconstruction condition of the project site and estimate vegetation cover. The ecologist will report the results of these inspections (including the assessment of overall vegetation cover described in this measure and the assessment of invasive plants described in Mitigation Measure BIO-5) in a brief memo following each year's site visit. Monitoring and maintenance may be extended if the success criteria are not attained by year 3. Remedial measures to be considered include, but are not limited to, supplemental planting or seeding, increased maintenance frequency, increased invasive plant removal activities, or alteration of maintenance strategies.

6.3 Impacts on Wetlands: Have a substantial adverse effect on state or federally protected wetlands (including, but not limited to, marsh, vernal

pool, coastal, etc.) through direct removal, filling, hydrological interruption, or other means (Less than Significant with Mitigation)

Wetlands and other waters of the U.S./state are present within Penitencia East Channel in the form of intermittent stream/freshwater marsh. Jurisdictional wetlands in the channel bottom are supported by intermittent flows and presumably a high groundwater table and are dominated by non-native vegetation. Some permanent (shading) and temporary impacts to the channel are proposed, in the form of the bridge and a temporary work area around the bridge. The bridge has been designed so that no loss of wetland or aquatic area will be permanently lost due to abutments or other structures.

The bridge will permanently shade 0.01 acre of intermittent stream/freshwater marsh (Figure 4). This habitat is naturally dynamic, seasonally altering its species composition, cover, and locations every year. The upstream watershed continuously disperses plant propagules into the study area, influencing the species composition dynamics year to year. The watershed will also convey storm flows differently year to year, depending on the amount of hardscape or soil saturation levels. Lastly, seemingly arbitrary locations will contain new plant propagules to take root and storm flows to scour out established vegetation. The shading will occur in a gradient under the bridge with the sunniest area closest to the bridge edges and the shadiest area along the centerline of the bridge. These unpredictable factors will all contribute to a shift in species composition, cover, and location due to bridge shading. Nevertheless, the altered habitat is anticipated to still function as an intermittent stream/freshwater marsh, as the soils and hydrologic regime will not change to a significant level.

The temporary work area within the channel, where dewatering, creek diversion, and installation of falsework may occur as described in Section 6.2, consists of a 40-foot buffer upstream and downstream of the proposed bridge, temporarily impacting up to 0.02 acre of intermittent stream/freshwater marsh (Figure 4). Temporary construction disturbance to the wetland habitat could lead to temporal loss of the soil stabilization functions that the wetland vegetation provides, causing erosion and sedimentation, which would be significant if not prevented. Denuded habitat may also be susceptible to increased or new infestations of weeds from lack of competition or introduction of new weed propagules on equipment used in this habitat.

Work in and near wetlands has the potential for indirect impacts as well, for example, spills of equipment fuels or oil that could enter the channel and cause degradation and contamination of the wetland habitat. However, as the project will comply with the Construction General Permit and will have a Stormwater Pollution Prevention Plan, best management practices will be employed to prevent such spills from entering the riparian corridor.

Although the quality of wetland and creek habitat on the project site is relatively low, this habitat provides important functions with respect to protecting water quality in downstream waters, and these features provide at least some habitat for animals. Therefore, project impacts on wetlands and aquatic habitat are significant, in the absence of mitigation measures. Implementation of Mitigation Measures BIO-6 through BIO-9 will reduce impacts on wetlands and aquatic habitats to less-than-significant levels.

6.4 Impacts on Wildlife Movement: Interfere substantially with the movement of any native resident or migratory fish or wildlife species or with established native resident or migratory wildlife corridors, or impede the use of native wildlife nursery sites (Less than Significant)

For many species, the landscape is a mosaic of suitable and unsuitable habitat types. Environmental corridors are segments of land that provide a link between these different habitats while also providing cover. Development that fragments natural habitats (i.e., breaks them into smaller, disjunct pieces) can have a twofold impact on wildlife: first, as habitat patches become smaller they are unable to support as many individuals (patch size); and second, the area between habitat patches may be unsuitable for wildlife species to traverse (connectivity).

The project site is almost entirely developed, and is situated within a dense matrix of urban development. The Penitencia East Channel does not provide an important movement pathway for aquatic or terrestrial wildlife species, as the channel dead-ends at the rail line just 0.2 miles upstream from the site. Any animals attempting to move along the stream in an upstream direction would encounter this dead-end, rather than being able to move through the project area to reach higher-quality habitat upstream. Similarly, there are no source populations of aquatic or terrestrial animals upstream that would be moving downstream through the project area. As a result, the proposed development of the project site would not result in the fragmentation of natural habitats, and any common, urban-adapted wildlife species that currently move through the project site would continue to be able to do so following project construction.

Although the project may require dewatering of the on-site portion of Penitencia East Channel, construction would occur during the dry season when little to no water would be present in the creek, and when the creek would not be important for the movement of aquatic species (e.g., fish) upstream and downstream.

Thus, the project would not interfere with the movement of any native resident or migratory fish or wildlife species or with established native resident or migratory wildlife corridors in the site vicinity.

6.5 Impacts due to Conflicts with Local Policies: Conflict with any local policies or ordinances protecting biological resources, such as a tree preservation policy or ordinance (Less than Significant with Mitigation)

6.5.1 Impacts Due to the Removal of Ordinance-Sized Trees (Less than Significant)

The proposed project will remove approximately 20 trees within what could be classified as vacant, undeveloped, or underdeveloped property, including a number of protected trees. All trees are ornamental and non-native including shamel ash and eucalyptus trees, with diameters ranging from three inches to 37 inches or more. The removal or pruning of ordinance-sized trees conflicts with Section 2-7.01 of the City of Milpitas Municipal Code. However, the project proponent will obtain a tree removal permit through the City's planning and building department and comply with the City's tree replacement guidelines and policies for any trees that need to be removed.

The project will comply with the City's tree preservation ordinance, including obtaining a tree removal permit, and it will comply with conditions of the project's tree removal permit. Such compliance will reduce any potential impacts due to conflicts with the City's tree preservation ordinance to less than significant levels under CEQA.

6.6 Impact due to Conflicts with an Adopted Habitat Conservation Plan: Conflict with the provisions of an adopted habitat conservation plan, natural community conservation plan, or other approved local, regional, or state habitat conservation plan (Less than Significant)

The project site is not located within an area covered by an adopted Habitat Conservation Plan, Natural Community Conservation Plan, or other approved local, regional, or state habitat conservation plan. Therefore, the project would not conflict with any such plans.

6.7 Cumulative Impacts

Cumulative impacts arise due to the linking of impacts from past, current, and reasonably foreseeable future projects in the region. Future development activities in the City will result in impacts on the same habitat types and species that will be affected by the proposed project. The proposed project, in combination with other projects in the area and other activities that impact the species that are affected by this project, could contribute to cumulative effects on special-status species. Other projects in the area include office/retail/commercial development, mixed use, and residential projects that could adversely affect these species.

The cumulative impact on biological resources resulting from the project in combination with other projects in the larger region would be dependent on the relative magnitude of adverse effects of these projects on biological resources compared to the relative benefit of impact avoidance and minimization efforts prescribed by planning documents, CEQA mitigation measures, and permit requirements for each project; and compensatory mitigation and proactive conservation measures associated with each project. In the absence of such avoidance, minimization, compensatory mitigation, and conservation measures, cumulatively significant impacts on biological resources would occur.

However, many projects in the region that impact resources similar to those impacted by the project will be subject to CEQA requirements. It is expected that such projects will mitigate their impacts on sensitive habitats and special-status species through the incorporation of mitigation measures and compliance with permit conditions.

Regardless of the magnitude and significance of cumulative impacts that result from other projects, the South Milpitas Boulevard Bridge project is not expected to have a substantial effect on biological resources, and would implement the mitigation measure described above to reduce impacts under CEQA to less than significant levels. Thus, provided that this project successfully incorporates the mitigation measure described in this

biological resources report, the project will not have a cumulatively considerable contribution to cumulative effects on biological resources.

Section 7. Compliance with Additional Laws and Regulations for Nesting Birds

Several species of common native birds protected by the MBTA and California Fish and Game Code may nest in trees and shrubs on the site or immediately adjacent to the site. It is also possible that protected native birds could nest on the building on the site. The removal of vegetation or demolition of a building supporting active nests may cause the direct loss of eggs or young, while construction-related activities located near an active nest may cause adults to abandon their eggs or young. This type of impact would not be significant under CEQA, in our opinion, because of the local and regional abundances of the species that could potentially nest on the site and the very low magnitude of the potential impact of development on these species (i.e., the project is expected to impact only a few pairs of these species, which is not a substantial impact on their regional populations). However, the following measures should be implemented to ensure that project activities do not violate the MBTA and California Fish and Game Code:

Measure 1. Avoidance of the Nesting Season. To the extent feasible, commencement of demolition and construction activities should be scheduled to avoid the nesting season. If demolition and construction activities are scheduled to take place outside the nesting season, all potential demolition/construction impacts on nesting birds protected under the MBTA and California Fish and Game Code will be avoided. The nesting season for most birds in Santa Clara County extends from February 1 through August 31.

Measure 2. Pre-Activity/Pre-Disturbance Surveys. If it is not possible to schedule demolition and construction activities between September 1 and January 31, then pre-activity surveys for nesting birds should be conducted by a qualified ornithologist to ensure that no nests will be disturbed during project implementation. We recommend that these surveys be conducted no more than seven days prior to the initiation of demolition or construction activities. During this survey, the ornithologist will inspect all trees and other potential nesting habitats (e.g., trees, shrubs, and buildings) in and immediately adjacent to the impact areas for nests.

Measure 3. Non-Disturbance Buffers. If an active nest is found sufficiently close to work areas to be disturbed by these activities, the ornithologist will determine the extent of a construction-free buffer zone to be established around the nest (typically 300 feet for raptors and 100 feet for other species), to ensure that no nests of species protected by the MBTA and California Fish and Game Code will be disturbed during project implementation.

Measure 4. Inhibition of Nesting. If construction activities will not be initiated until after the start of the nesting season, all potential nesting substrates (e.g., bushes, trees, grasses, and other vegetation) that are scheduled to be removed by the project may be removed prior to the start of the nesting season (e.g., prior to February 1). This will preclude the initiation of nests in this vegetation, and minimize the potential delay of the project due to the presence of active nests in these substrates.

Section 8. References

Beier, P. 2006. Effects of artificial night lighting on mammals in Rich, C. and T. Longcore, eds. Ecological Consequences of Artificial Night Lighting. Covelo, CA: Island Press. Pp 19-42.

Bumble Bee Watch. 2023. Bumble bee sightings map. Accessed December 2023 from https://www.bumblebeewatch.org/app/#/bees/map.

[CDFW] California Department of Fish and Wildlife. 2019. Report to the Fish and Game Commission. Evaluation of the petition from the Xerces Society, Defenders of Wildlife, and the Center for Food Safety to list four species of bumble bees as endangered under the California Endangered Species Act. April 4.

[CDFW] California Department of Fish and Wildlife. 2023. Vegetation Classification and Mapping Program: Natural Communities List. Accessed December 2023 from https://www.wildlife.ca.gov/Data/VegCAMP/Natural-Communities.

[CNDDB] California Natural Diversity Database. 2023. Rarefind 5.0. California Department of Fish and Wildlife. Accessed December 2023 from http://www.dfg.ca.gov/biogeodata/cnddb/mapsanddata.asp.

[CNPS] California Native Plant Society. 2023. Inventory of Rare and Endangered Plants (online edition, 9-01 1.0). Accessed December 2023 from http://www.cnps.org/inventory.

Cornell Lab of Ornithology. 2023. eBird. http://www.ebird.org/. Accessed December 2023.

de Molenaar, J.G., M.E. Sanders, and D.A. Jonkers. 2006. Road lighting and grassland birds: local influence of road lighting on a black-tailed godwit population in Rich, C. and T. Longcore, eds. Ecological Consequences of Artificial Night Lighting. Covelo, CA: Island Press. Pp 114-136.

DeCandido R. and D. Allen. 2006. Nocturnal hunting by peregrine falcons at the Empire State Building, New York City. Wilson J. Ornithol. 118(1): 53-58.

Faber-Langendoen, D., J. Nichols, L. Master, K. Snow, A. Tomaino, R. Bittman, G. Hammerson, B. Heidel, L. Ramsay, A. Teucher, and B. Young. 2012. NatureServe Conservation Status Assessments: Methodology for Assigning Ranks. NatureServe, Arlington, Virginia.

Flecker, A.S. 1992. Fish predation and the evolution of invertebrate drift periodicity-evidence from neotropical streams. Ecology 73(2): 438-448.

Google LLC. 2023. Google Earth Pro (Version 7.3.3.7786 (64-bit)) [Software]. Available from earth.google.com.

H. T. Harvey & Associates. 1997. Red-legged frog distribution and status - 1997. Prepared for the Santa Clara Valley Water District.

H. T. Harvey & Associates. 1999. Santa Clara Valley Water District California Tiger Salamander Distribution and Status – 1999. Prepared for the Santa Clara Valley Water District.

H. T. Harvey & Associates. 2011. Santa Clara Valley Water District Stream Maintenance Program Biological Assessment. July 2012.

Hernandez, S.A., and B.L. Peckarsky. 2014. Do stream mayflies exhibit trade-offs between food acquisition and predator avoidance behaviors? Freshwater Science 33(1): 124–133.

iNaturalist. 2023. Accessed December 2023 from https://www.inaturalist.org/observations.

Jennings, M. R., and M. P. Hayes. 1994. Amphibian and reptile species of special concern in California. California Department of Fish and Game, Inland Fisheries Division, Rancho Cordova, California.

Jepson Flora Project (eds.). 2023. Jepson eFlora. Accessed December 2023 from https://ucjeps.berkeley.edu/eflora/.

Longcore, T. and C. Rich. 2004. Ecological light pollution. Front. Ecol. Environ. 2(4): 191-198.

Miller, M. W. 2006. Apparent effects of light pollution on singing behavior of American robins. Condor 108(1): 130-139.

Miyasaka, H., and S. Nakano. 2001. Drift dispersal of mayfly nymphs in the presence of chemical and visual cues from diurnal drift- and nocturnal benthic-foraging fishes. Freshwater Biology 46 (9): 1229–1237.

Negro, J. J., J. Bustamante, C. Melguizo, J. L. Ruiz, and J. M. Grande. 2000. Nocturnal activity of lesser kestrels under artificial lighting conditions in Seville, Spain. J. Raptor Res. 34(4): 327-329.

[NWI] National Wetlands Inventory. 2023. Wetlands Mapper. U.S. Fish and Wildlife Service. Accessed December 2023 from http://www.fws.gov/wetlands/Wetlands-Mapper.html.

[NRCS] Natural Resource Conservation Service. 2023. Web Soil Survey. U.S. Department of Agriculture. Accessed December 2023 from: http://websoilsurvey.nrcs.usda.gov

Perry, G., B. W. Buchanan, R. N. Fisher, M. Salmon, and S. E. Wise. 2008. Chapter 16: Effects of Artificial Night Lighting on Amphibians and Reptiles In Urban Environments. In Mitchell, J. C., R. E. Jung Brown, and B. Batrholomew (Ed.). Urban Herpetology – Herpetological Conservation 3:239-256. Society for the Study of Amphibians and Reptiles.

PRISM Climate Group. 2023. Online PRISM Data Explorer. Oregon State University, Corvallis, OR. Accessed December 2023 from: http://www.prism.oregonstate.edu/

Riley, W.D., P.I. Davison, D.L. Maxwell, and B. Bendall. 2013. Street lighting delays and disrupts the dispersal of Atlantic salmon (Salmo salar) fry. Biological Conservation 158: 140-146.

Ringer, R. K. 1972. Effect of light and behavior on nutrition. J. Anim. Sci. 35: 642-647.

Scheuerell, M.D., and D.E. Schindler. 2003. Diel vertical migration by juvenile sockeye salmon: Empirical evidence for the antipredation window. Ecology 84(7): 1713–1720.

Stich, D.S., G.B. Zydlewski, J.F. Kocik, and J.D. Zydlewski. 2015. Linking behavior, physiology, and survival of Atlantic salmon smolts during estuary migration. Marine and Coastal Fisheries 7 (1): 68–86.

Talon Ecological Research Group. 2023. Santa Clara Valley Habitat Plan 2022 burrowing owl breeding season survey report.

[Valley Water] Santa Clara Valley Water District. 2011. Final Subsequent Environmental Impact Report for the Multi-Year Stream Maintenance Program Update 2012-2022.

Zapata, M.J., L.A. Yeager, and C.A. Layman. 2014. Day–night patterns in natural and artificial patch reef fish assemblages of the Bahamas. Caribbean Naturalist 18: 1–15.

Zapata, M.J., S. Mazeika, P. Sullivan, and S.M. Gray. 2019. Artificial Lighting at Night in Estuaries-Implications from Individuals to Ecosystems. Estuaries and Coasts 42: 309-330.

Appendix A. Plants Observed

Scientific Name	Common Name	Wetland Rank	Cal-IPC Rank
EUDICOTS			
ASTERACEAE – SUNFLOWER FAMILY			
Carduus pycnocephalus ssp. *pycnocephalus**	Italian thistle		Moderate
*Helminthotheca echioides**	bristly ox-tongue	FAC	Limited
*Lactuca serriola**	prickly lettuce	FACU	
*Tragopogon sp.**	goat's beard		
BRASSICACEAE – MUSTARD FAMILY			
*Raphanus sativus**	radish		Limited
CONVOLVULACEAE – MORNING–GLORY FAMILY			
*Convolvulus arvensis**	bindweed		
EUPHORBIACEAE – SPURGE FAMILY			
Euphorbia polycarpa	smallseed sandmat		
FABACEAE – LEGUME FAMILY			
*Medicago polymorpha**	variable burclover	FACU	Limited
*Melilotus albus**	white sweetclover		
*Vicia sativa**	garden vetch	FACU	
LYTHRACEAE – LOOSESTRIFE FAMILY			
Lythrum sp.	loosestrife	OBL	
MALVACEAE – MALLOW FAMILY			
*Malva parviflora**	cheeseweed		
OLEACEAE – OLIVE FAMILY			
*Fraxinus uhdei**	shamel ash		
ONAGRACEAE – EVENING PRIMROSE FAMILY			
Epilobium brachycarpum	short-fruited willowherb		
PLANTAGINACEAE – PLANTAIN FAMILY			
*Kickxia elatine**	sharp-leaved kickxia		
Veronica sp.	speedwell		
POLYGONACEAE – BUCKWHEAT FAMILY			
*Persicaria maculosa**	lady's thumb	FACW	
Polygonum aviculare ssp. *aviculare**	oval leaf knotweed	FAC	
*Rumex crispus**	curly dock	FAC	Limited
SALICACEAE – WILLOW FAMILY			

Populus fremontii ssp. *fremontii*	Fremont cottonwood	FAC	
MONOCOTS			
ALISMATACEAE – WATER–PLANTAIN FAMILY			
*Alisma lanceolatum**	lance-like water-plantain	OBL	
ARECACEAE – PALM FAMILY			
*Phoenix canariensis**	Canary Island palm		Limited
CYPERACEAE – SEDGE FAMILY			
Cyperus eragrostis	lovegrass flatsedge	FACW	
POACEAE – GRASS FAMILY			
*Avena fatua**	wild oat		Moderate
*Bromus diandrus**	ripgut grass		Moderate
*Cynodon dactylon**	Bermuda grass	FACU	Moderate
*Echinochloa crus-galli**	cock's spur barnyard grass	FACW	
*Festuca perennis**	rye grass	FAC	Moderate
*Polypogon monspeliensis**	annual beard grass	FACW	Limited
*Polypogon viridis**	water beard grass	FACW	
Stipa miliacea var. *miliacea**	smilo grass		Limited
TYPHACEAE – CATTAIL FAMILY			
Typha domingensis	southern cattail	OBL	

APPENDIX C
Bridge Design Geotechnical Report by ENGEO, dated 2017

FOUNDATION EXPLORATION

VEHICULAR BRIDGE
400 AND 450 MONTAGUE EXPRESSWAY
MILPITAS, CALIFORNIA

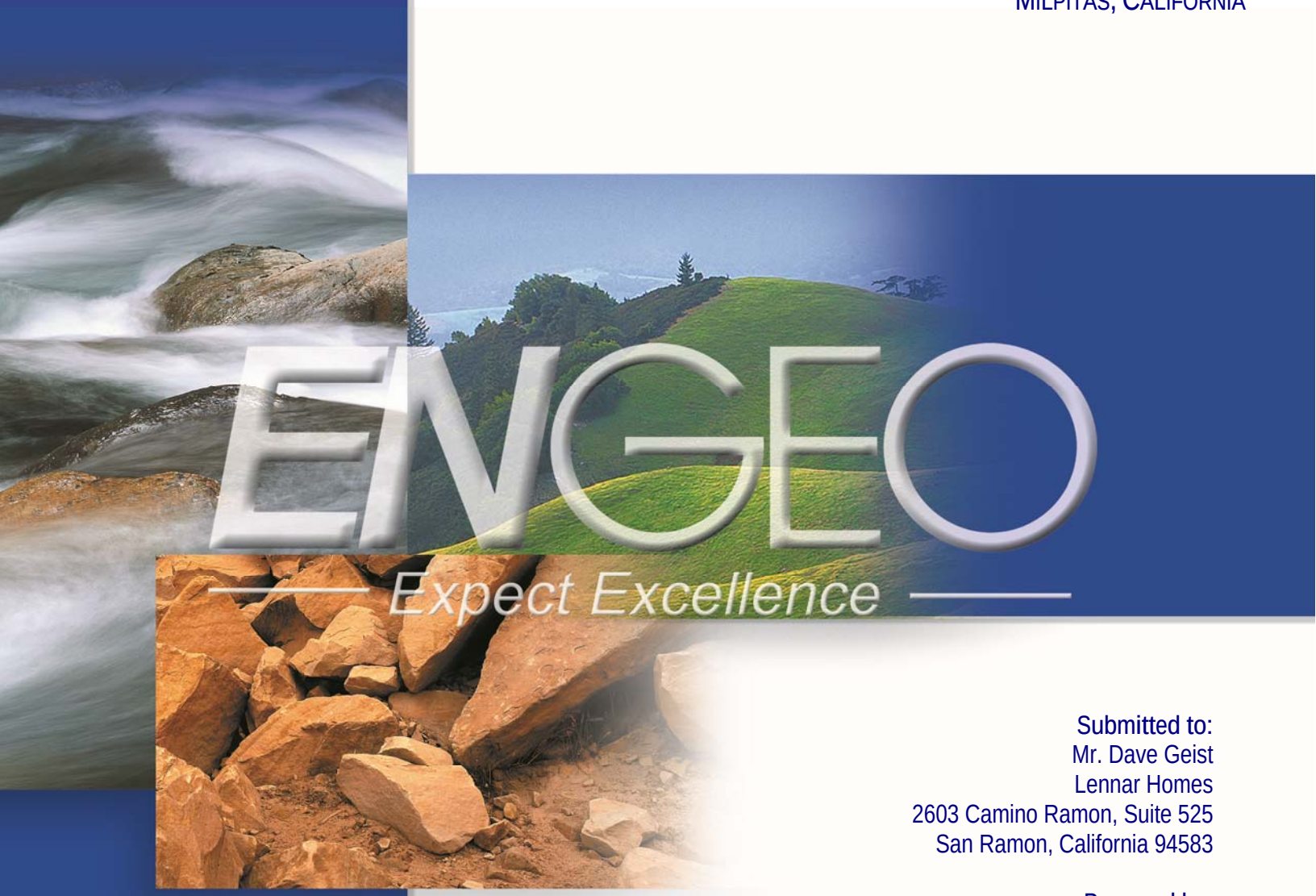

Submitted to:
Mr. Dave Geist
Lennar Homes
2603 Camino Ramon, Suite 525
San Ramon, California 94583

Prepared by:
ENGEO Incorporated

January 5, 2017

Project No:
12074.000.002

Copyright © 2016 by ENGEO Incorporated. This document may not be reproduced in whole or in part by any means whatsoever, nor may it be quoted or excerpted without the express written consent of ENGEO Incorporated.

Project No.
12074.000.002

January 5, 2017

Mr. Dave Geist
Lennar Homes
2603 Camino Ramon, Suite 252
San Ramon, CA 94583

Subject: Vehicular Bridge
400 and 450 Montague Expressway
Milpitas, California

FOUNDATION EXPLORATION

Dear Mr. Geist:

We prepared this bridge design geotechnical report for Lennar Homes. We characterized the subsurface conditions at the location of the proposed Vehicular Bridge planned at your 400 and 450 Montague Expressway project to provide the enclosed geotechnical recommendations for design.

Our experience and that of our profession clearly indicate that the risk of costly design, construction, and maintenance problems can be significantly lowered by retaining the design geotechnical engineering firm to review the project plans and specifications and provide geotechnical observation and testing services during construction. Please let us know when working drawings are nearing completion, and we will be glad to discuss these additional services with you.

If you have any questions or comments regarding this report, please call and we will be glad to discuss them with you.

Sincerely,

ENGEO Incorporated

REGISTERED PROFESSIONAL ENGINEER
JEANINE RUFFONI
No. 83507
CIVIL
STATE OF CALIFORNIA

Jeanine T. Ruffoni, PE

PROFESSIONAL GEOLOGIST
ROBERT BOECHE
No. 2318
CERTIFIED ENGINEERING GEOLOGIST
STATE OF CALIFORNIA

Robert H. Boeche, CEG

REGISTERED PROFESSIONAL ENGINEER
PEDRO J. ESPINOSA
No. 2954
GEOTECHNICAL
STATE OF CALIFORNIA

Pedro J. Espinosa, GE
jtr/rhb/pe/bvv

TABLE OF CONTENTS

Letter of Transmittal

1.0 INTRODUCTION 1

1.1 PURPOSE AND SCOPE 1
1.2 PROJECT LOCATION 1
1.3 PROJECT DESCRIPTION 2

2.0 FINDINGS 2

2.1 GEOLOGY AND SEISMICITY 2
2.1.1 Geology 2
2.1.2 Seismicity 2
2.2 FIELD EXPLORATION 2
2.3 SURFACE CONDITIONS 3
2.4 SUBSURFACE CONDITIONS 4
2.5 GROUNDWATER CONDITIONS 4
2.6 LABORATORY TESTING 4

3.0 DISCUSSION AND CONCLUSIONS 4

3.1 SEISMIC HAZARDS 4
3.1.1 Ground Rupture 5
3.1.2 Ground Shaking and Seismic Design Criteria 5
3.1.3 Liquefaction 5
3.1.4 Lateral Spreading 6
3.2 SOIL CORROSIVITY 6
3.3 SCOUR 7

4.0 RECOMMENDATIONS 7

4.1 FOUNDATION DESIGN 7
4.1.1 Foundation Type 7
4.1.2 Foundation Data Provided by Structural Engineer 7
4.1.3 Pile Vertical Capacity 8
4.1.4 Lateral Resistance 9
4.1.5 Lateral Capacity Group Reduction 9
4.1.6 CIDH Pile Construction 10
4.2 RETAINING WALLS 11
4.2.1 Abutment Walls 11
4.2.2 Retaining Wall Drainage 11
4.3 PAVEMENT DESIGN AND EARTHWORK 11

5.0 LIMITATIONS AND UNIFORMITY OF CONDITIONS 11

FIGURES
APPENDIX A – Exploration Logs (ENGEO, 2016)

TABLE OF CONTENTS (Continued)

APPENDIX B – Laboratory Test Data (ENGEO, 2016)
APPENDIX C – Corrosivity Test Data (CERCO Analytical, Inc., 2016)

1.0 INTRODUCTION

1.1 PURPOSE AND SCOPE

We prepared this report to provide recommendations for foundation design of the proposed Vehicular Bridge at the 400 and 450 Montague Expressway project in Milpitas. For this report, we conducted a subsurface exploration, performed lab testing, and provided design details relevant to the proposed bridges.

We previously provided preliminary foundation recommendations in July 2016 (ENGEO, July 2016). We also previously provided geotechnical recommendations regarding development of the adjacent residential project in June 2015 (ENGEO, June 2015).

A separate report will be issued to address the planned Pedestrian Overcrossing once design plans are available.

For our use, we received the following:

- Carlson, Barbee, & Gibson (CBG), 730 E. Capitol Ultimate Improvements Plan, 450 Montague, Structural Engineering Group, dated June 18, 2015.

- Cornerstone Structural Engineering Group (CSEG), Memorandum: 450 Montague Vehicular and Pedestrian Bridges Required Preliminary Foundation Report (PFR) Items, dated July 13, 2015.

- CSEG, Foundation Design Data Sheet, Milpitas Blvd Extension Bridge Over Penitencia Creek, dated June 30, 2016.

- CSEG, General Plan, S. Milpitas Boulevard Bridge Over East Penitencia Creek, dated August 22, 2016 (Plan Check Submittal).

This report was prepared for the exclusive use of our client and their consultants for design of this project. In the event that any changes are made in the character, design or layout of the development, we must be contacted to review the conclusions and recommendations contained in this report to evaluate whether modifications are recommended. This document may not be reproduced in whole or in part by any means whatsoever, nor may it be quoted or excerpted without our express written consent.

1.2 PROJECT LOCATION

Based on review of the provided 730 E. Capitol Ultimate Improvements plan prepared by CBG with markups by CSEG, the planned Vehicular Bridge is generally located southeast of the intersection of Montague Expressway and East Capitol Avenue in Milpitas, California, as shown on Figures 1 and 2. More specifically, the planned bridge is shown to span East Penitencia Creek, connecting the future Milpitas Boulevard extension to the north with a future public park

to the south. The adjacent East Penitencia Creek banks are generally up to 10 feet high and have slope gradients of 2:1 (horizontal:vertical) or flatter.

1.3 PROJECT DESCRIPTION

Based on a memorandum prepared by CSEG and dated July 13, 2015, the planned Vehicular Bridge will consist of a 40-foot-long and 48-foot-wide, clear-span cast-in-place reinforced concrete slab supported on cast-in-drilled-hole (CIDH) piers. It is also our understanding that the abutments will be diaphragm abutments.

2.0 FINDINGS

2.1 GEOLOGY AND SEISMICITY

2.1.1 Geology

Regional geologic maps locate the site in the broad, north-south trending, alluvial-filled Santa Clara Valley. Wentworth, et al. (1999, Figure 3) has mapped the soils underlying the bridge locations as younger Holocene-age alluvial fan deposits (Qhf1).

2.1.2 Seismicity

Because of the presence of nearby active faults[1], the Bay Area Region is considered seismically active. Numerous small earthquakes occur every year in the region, and large (>M7) earthquakes have been recorded and can be expected to occur in the future. The site is not located within a State of California Earthquake Fault Zone. Figure 5 shows the approximate location of known active and potentially active faults and significant historic earthquakes mapped within the San Francisco Bay Region.

The nearest known active faults [1] considered in the development of the ARS curve in accordance with the 2013 Caltrans SDC procedure (further discussed in Section 3.1.2.) are as follows: the Silver Creek Fault is mapped approximately 1.9 miles southwest of the site; the Hayward Fault (southeast extension) is mapped about 2.4 miles northeast of the site; and the Hayward Fault (main trace) is mapped about 5.5 miles north of the site.

2.2 FIELD EXPLORATION

We observed drilling of two borings (1-B3 and 1-B4) at the locations shown on the Site Plan, Figure 2. We note that Borings 1-B1 and 1-B2 were performed at the general abutment locations for the planned Pedestrian Overcrossing and are not included in this report.

[1] Caltrans considers an active fault as one that has had surface displacement within Holocene or latest Pleistocene time (last 15,000 years)

Table 2.2-1 summarizes the exploration location, elevation, and depth.

TABLE 2.2-1
Summary of Exploration Locations

Exploration Location	Total Depth (feet)	Top Elevation (NGVD 29) (feet)	Bottom Elevation (NGVD 29) (feet)
1-B3	57½	43	-14½
1-B4	61½	42	-19½

Considering the type of planned foundation (24-inch CIDH), the depth of exploration was targeted for approximately 60 feet below ground surface. Furthermore, based on our experience in the general site area in similarly mapped geologic deposits, we anticipate that deposits generally become stiffer with increasing depth.

An ENGEO representative observed the drilling and logged the subsurface conditions at each location. We retained a truck-mounted drill rig and crew to advance the borings using 6-inch-diameter mud rotary methods. The borings were advanced to depths ranging from 57½ to 61½ feet below existing grade. We permitted and backfilled the borings in accordance with the requirements of the Santa Clara Valley Water District.

We collected disturbed and relatively undisturbed soil samples using a 2½-inch-inside-diameter (I.D.) California-type split-spoon sampler fitted with 6-inch-long stainless steel liners and a 2-inch-outside-diameter (O.D.) Standard Penetration Test (SPT) split-spoon sampler. In addition, 3-inch O.D. Shelby tube samplers were utilized.

The standard blow counts were obtained by dropping a 140-pound hammer through a 30-inch free fall. The sampler was driven 18 inches and the number of blows was recorded for each 6 inches of penetration. Unless otherwise indicated, the blows per foot recorded on the boring log represent the accumulated number of blows to drive the last 1 foot of penetration; the blow counts have not been converted using any correction factors.

We used the field logs to develop the report logs in Appendix A. The logs depict subsurface conditions at the exploration locations for the date of exploration; however, subsurface conditions may vary with time.

2.3 SURFACE CONDITIONS

The borings were located along the Santa Clara Valley Water District maintenance trail and site grades ranged from approximately Elevation 42 to 43 feet (NGVD 29). The surface conditions generally consisted of minor shrubs and seasonal vegetation.

2.4 SUBSURFACE CONDITIONS

Based on the conditions encountered in the exploratory borings, the subsurface conditions generally consist of stiff to very stiff lean clay and fat clay deposits encountered to the maximum explored depth of approximately 61½ feet below existing ground surface (bgs). Undocumented fill consisting of gravelly lean clay was encountered in 1-B3 to approximately 2 feet bgs. Also, a localized zone of medium stiff fat clay was encountered at approximately 41 feet bgs.

2.5 GROUNDWATER CONDITIONS

Prior to switching to mud rotary drilling, groundwater was generally encountered during solid-flight auger drilling activities at approximately 11 feet bgs, corresponding to Elevation 32 feet (NGVD 29). Similarly, a historic high groundwater level between 5 and 10 feet below existing grade was reported for the site vicinity (CGS, Milpitas Quadrangle, 2001).

Fluctuations in the level of groundwater may occur due to variations in rainfall, tidal fluctuations, irrigation practice, and other factors not evident at the time measurements were made.

2.6 LABORATORY TESTING

The lab tests performed in this study include moisture content, dry density, plasticity index, gradation, and shear strength on selected samples. The laboratory test results are included on the borelog in Appendix A. Individual test results are presented in Appendix B. We also submitted select samples for analytical corrosion testing including pH, redox, resistivity, sulfate and chloride content as further discussed in Section 3.2.

3.0 DISCUSSION AND CONCLUSIONS

Based on our explorations, laboratory test results and analysis, we conclude that the proposed bridge is feasible from a geotechnical and geologic standpoint, provided that the recommendations included in this report, along with other sound engineering practices, are incorporated in the design and construction of the project.

The site was evaluated with respect to known geological and geotechnical hazards common to the San Francisco Bay Region, as discussed in the below sections.

3.1 SEISMIC HAZARDS

Potential seismic hazards resulting from a nearby moderate to major earthquake can generally be classified as primary and secondary. The primary effect is ground rupture, also called surface faulting. The common secondary seismic hazards include ground shaking and ground lurching. The following sections present a discussion of these hazards as they apply to the site.

3.1.1 Ground Rupture

Since there are no known active faults crossing the project area and the project area is not located within an Earthquake Fault Special Study Zone, it is our opinion that ground rupture is unlikely at the subject property.

3.1.2 Ground Shaking and Seismic Design Criteria

As discussed previously, the project site is located in a seismically active region. An earthquake of moderate to high magnitude generated within the San Francisco Bay Region could cause significant ground shaking at the project site. The degree of shaking is dependent on the magnitude of the event, the distance to its zone of rupture and local geologic conditions. The seismic design criteria are discussed below.

Based on the geology of the area and our study for the greater Montague Expressway project, we anticipate the subsurface conditions to be relatively uniform at the bridge location. For design, we estimated the average shear wave velocities for the top 100 feet (30 meters) (V_s30) of soil to be approximately 300 meters/second.

To develop ARS curves in accordance with the 2013 Caltrans SDC procedures, we performed site-specific seismic hazard analyses. The 2013 Caltrans SDC requires comparing and enveloping the ARS curves calculated from the following:

- Deterministic Criteria based on late-Quaternary faults in the 2012 fault database published by California Geology Survey.
- Probabilistic Criteria based on a 5% in 50 years probability of exceedance ground motion (975-year return period).
- Minimum Spectrum based on a $M_w = 6.5$ strike-slip event occurring at a distance of 12 km from site.

The deterministic criteria are controlled by an event on the Silver Creek fault (approximately 1.9 miles from the project area), which is a reverse fault capable of generating a Maximum Credible Earthquake with a maximum moment magnitude, M_{max}, of 6.9. The probabilistic criteria are based on source data from the 2008 United States Geological Survey (USGS) National Seismic Hazard Map.

The resulting ARS curve developed in accordance with the 2013 Caltrans SDC, include near-fault directivity effects and is contained in Figure 6.

3.1.3 Liquefaction

Soil liquefaction results from loss of strength during cyclic loading, such as imposed by earthquakes. Soils most susceptible to liquefaction are clean, loose, saturated, uniformly graded,

fine-grained sands. Empirical evidence indicates that loose to medium dense gravels, silty sands, low-plasticity silts, and some low-plasticity clays are also potentially liquefiable.

Review of the Seismic Hazard Zones Map for the Milpitas Quadrangle (2004, Figure 4) indicates that the project area is located within a mapped liquefaction zone.

Considering the borings generally encountered moderately- to highly-expansive stiff to very stiff cohesive materials, we consider the risk of liquefaction to be low.

3.1.4 Lateral Spreading

Lateral spreading is a failure within a nearly horizontal soil zone, which causes the overlying soil mass to move down a gentle slope or toward a free face such as a creek or open body of water. The existing slope banks of the adjacent Penitencia Creek may act as a free face for lateral spreading should subsurface soils liquefy during a seismic event. However, as discussed in above sections, we consider the risk of liquefaction to be low. Therefore, it is our opinion that the risk of lateral spreading at the proposed bridge locations is low.

3.2 SOIL CORROSIVITY

We submitted three select soil samples to CERCO Analytical Inc. for determination of pH, resistivity, sulfate, and chloride. The results are summarized in the table below and the complete results of these tests are presented in Appendix C.

TABLE 3.2-1
Soil Corrosivity Test Results

Sample Number	Sulfate (mg/kg)	Chloride Ion (mg/kg)	Resistivity (Ohm-cm)	pH
1-B3 @ 5 feet bgs	71	< 15	860	8.28
1-B4 @ 30 feet bgs	33	< 15	3,700	8.57

According to Caltrans Corrosion Guidelines Version 2.0 (2012), site soils are considered corrosive if chloride concentration is 500 ppm or above, sulfate concentration is 2,000 ppm or above, or pH is 5.5 or less. Based on these criteria, site soils are not considered corrosive to structural elements.

In accordance with AASHTO LRFD Bridge Design Specifications, 6th Edition, with Amendments by Caltrans dated January 2014, a minimum concrete compressive strength of 3,600 psi for reinforced concrete and a maximum water-cement ratio of 0.40 is required. Minimum concrete cover for various structural elements should be determined using Table 5.12.3-1 (AASHTO).

It should be noted; however, that the structural engineering design requirements for concrete may result in more stringent concrete specifications.

Note that ASTM Test Method D4327 was used in lieu of the ACI designated sulfate test methods as it provides better test results.

3.3 SCOUR

Scour is the engineering term for the erosion of the soil surrounding a bridge foundation and is the result of the erosive action of flowing water excavating and carrying away material from the streambed and banks around the piers and abutments of the bridge foundation system.

We understand that a scour evaluation will be performed for the proposed Vehicular Bridge, which is to cross Penitencia Creek. For the purposes of this report, we have assumed that negligible scour will occur at the bottom of the creek. If the future hydraulic study indicates that there is a potential for scour, the foundation recommendations contained herein should be modified as necessary.

4.0 RECOMMENDATIONS

Based on the results of the geotechnical exploration presented in this report, it is our opinion that the proposed bridge is feasible from a geotechnical standpoint provided the recommendations provided in the following sections are considered in the bridge design and construction.

4.1 FOUNDATION DESIGN

4.1.1 Foundation Type

We understand that the foundation system for the bridge will consist of a 24-inch CIDH pile system.

4.1.2 Foundation Data Provided by Structural Engineer

The below tables show the loading data provided by the project Structural Engineer, CSEG.

TABLE 4.1.2-1
Foundation Design Data

Support Location	Pile Type	Pile Cap Size (feet)		Nominal Resistance (kips)		Permissible Settlement (inches)	No. of Piles per Support
		B	L	Compression[1]	Tension		
Abut 1	24-inch CIDH	3	48	390[1]	N/A	2	6
Abut 2	24-inch CIDH	3	48	390[1]	N/A	2	6

Notes: 1. Nominal resistance includes resistance factor ($\phi = 0.7$)

TABLE 4.1.2-2
Foundation Design Loads

Support No.	Service-I Limit State (kips)			Strength Limit State (Controlling Group, kips)				Extreme Limit State (Controlling Group, kips)			
	Total Load		Permanent Loads	Compression[1]		Tension		Compression		Tension	
	Per Support	Per Pile	Per Support	Per Support	Max Per Pile	Per Support	Max Per Pile	Per Support	Max per Pile	Per Support	Max per Pile
Abut 1	960	190	750	1890	390	N/A	N/A	N/A	N/A	N/A	N/A
Abut 2	960	190	750	1890	390	N/A	N/A	N/A	N/A	N/A	N/A

Notes: 1. Nominal resistance includes resistance factor ($\phi = 0.7$)

4.1.3 Pile Vertical Capacity

We developed allowable vertical capacity versus depth for a 24-inch-diameter CIDH pile and assumed friction only piles. Our analysis is based on the beta method and is in accordance with the guidelines provided in the Federal Highway Administration (FHWA) Publication FHWA NHI-10-016 (Brown et al, 2010).

Based on the pile data design loads provided by CSEG, we determined the ultimate (geotechnical factor of safety equals one) compression vertical capacities for the CIDH piles as outlined in the table below.

TABLE 4.1.3-1
Pile Data Table

Location	CIDH Pile Diameter (inches)	Nominal Resistance (kips)	Design Tip Elevation (NGVD 29) (feet)
		Compression[1]	
Abutment 1	24	390	-18
Abutment 2	24	390	-19

Notes: 1. Nominal resistance includes resistance factor ($\phi = 0.7$)
2. The structural designer shall calculate the lateral lengths.

We checked the service limit loading against the tolerable settlement and settlement does not control design.

We do not anticipate any vertical pile group effect as long as the center-to-center spacing of each CIDH pile is at least three pile diameters. See Section 4.1.4 for further discussion on lateral pile group effects.

4.1.4 Lateral Resistance

Lateral load resistance for pile-supported structures is developed through pile bending/soil interaction. The magnitude of the lateral load resistance is dependent upon several factors, including axial load on the pile, pile stiffness, pile embedment length, conditions of fixity at the pile cap, the physical properties of surrounding soil and the magnitude of allowable lateral deflections.

Based upon the subsurface conditions encountered, we developed L-Pile soil input criteria for lateral pile capacity and load-deflection computation.

TABLE 4.1.4-1
Lateral Pile Analysis Parameters
(Based on 1-B3 and 1-B4 generalized subsurface conditions)

Elevation (NGVD 29) (Feet)	Generalized Soil Type	L-Pile Soil Type	Eff. Unit Weight (pci)	Friction Angle (deg.)	Undrained Cohesion, c (psi)	Strain Factor, E_{50}	Modulus of Soil Reaction, K (pci)
42 to 37	Clay	Soft CLAY (Matlock)	0.072	-	10.4	0.01	-
37 to 2	Clay	Soft CLAY (Matlock)	0.033	-	13.9	0.007	-
2 to -8	Clay	Soft CLAY (Matlock)	0.033	-	8.7	0.007	-
-8 to -18	Clay	Soft CLAY (Matlock)	0.033	-	17.4	0.007	-

4.1.5 Lateral Capacity Group Reduction

Research has shown that the lateral capacity of a group of piles is generally less than that of a single pile for pile spacing less than 6 to 8 pile diameters. We recommend the multipliers provided in Table 4.1.5-1 to be considered in the LPILE/GROUP analysis. These multipliers are based on AASHTO LRFD BDS where “D” is pile diameter.

TABLE 4.1.5-1
Preliminary Design P-Multiplier Values by Row Position

	Design P-Multiplier			
Pile Spacing (Center-to-Center)	3D	5D	7D	8D
Lead Row	0.75	1.0	1.0	1.0
Second Row	0.55	0.85	1.0	1.0
Third and Higher Rows	0.40	0.70	0.90	1.0

4.1.6 CIDH Pile Construction

The following guidelines should be used during construction of CIDHs.

1. For center-to-center pile spacing less than six times the pile diameter, no two adjacent piles can be constructed concurrently.

2. The bottoms of drilled holes should be reasonably clean and free of loose soil before reinforcing steel is installed and concrete is placed.

3. We recommend that the excavation of piers be performed under our direct observation to establish that the piers are founded in suitable materials and constructed in accordance with the recommendations presented in this report.

4. Concrete placement by pumping with rigid tremie pipe to the bottom of the drilled hole is recommended. Specifications should require that sufficient space be provided in the reinforcing cage during fabrication to allow the insertion of a tremie tube for concrete placement. The reinforcing cage should be installed and the concrete pumped immediately after drilling is completed.

5. If caving occurs, a temporary casing or wet construction method may be required during construction. Casings should have an outer diameter equal to or exceeding the pile diameter. Temporary casing should be placed tight-in-hole. Vibratory or impact hammer with or without center-relief drilling can be used to install the temporary casing provided the ground vibrations are monitored for potential movement; casing installation using this method should be suspended if excessive movement is detected. The temporary casing should be retrieved as the concrete is being poured, while always maintaining at least a 5-foot head of concrete inside the casing.

6. During the exploration, groundwater was encountered at approximately 11 feet bgs. Groundwater level can fluctuate due to seasonal rainfall amount, local irrigation, groundwater recharge program and other man-made conditions. If groundwater is encountered, it should be controlled in accordance with Section 19-3.03B(5) of the Caltrans Standard Specifications (2015).

Drilling operations and concrete placement should be coordinated so that drilled holes are left open a minimum amount of time. Depressions at the tops of the bridge abutment caissons, resulting from drilling operations or from any other cause, should be backfilled to prevent ponding. Concrete collars occurring at the tops of the bridge abutment caissons as a result of over pouring must be removed to prevent unnecessary uplift forces from being applied to the caissons.

At the time of concrete placement, the volume of concrete entering the drilled holes should be monitored to verify that additional loss of ground has not occurred between drilling operations and the pouring of concrete.

4.2 RETAINING WALLS

4.2.1 Abutment Walls

We understand the abutments of the proposed bridges will be constructed to retain engineered fill. Abutment walls should be designed to resist both lateral loads imposed by earth pressures and any additional lateral loads caused by surcharging from construction equipment and vehicles operating above the walls.

The following Table 4.2.1-1 provides soil design parameters for both existing onsite material as well as Caltrans structure backfill material.

TABLE 4.2.1-1
Soil Design Parameters for Abutment Walls

Soil Properties	Onsite Soil	Caltrans Structure Backfill
Density of Retained Engineered Fill	120 pcf	
Minimum Friction Angle	20 degrees	32 degrees
Active Pressure	50 pcf	36 pcf
At-rest Pressure	80 pcf	70 pcf
Passive Resistance	Section 7.8 of Caltrans SDC (2013)	
Seismic Active Increment Pressure*	34 pcf	

*The Seismic Active Increment shall be modeled with a triangular distribution

The above parameters assume a level backfill at the top of the wall. If lateral movement at the top of abutment walls is restrained, the at-rest pressure should be used for design.

4.2.2 Retaining Wall Drainage

Back drains should be installed behind abutment walls to relieve hydrostatic pressure. Back drains should be constructed with Bridge Detail 3-1 on Sheet BO-3 per Caltrans Standard Plans (2015) or the geocomposite drain alternative per Section 6 of the Caltrans Bridge Design Details (1992), whichever is more stringent. If back drains are not installed, lateral earth pressure values should be increased by 40 pcf to account for hydrostatic pressure.

4.3 PAVEMENT DESIGN AND EARTHWORK

Pavement design and earthwork should conform to the recommendations provided in our Geotechnical Exploration report prepared for the adjacent residential development (ENGEO, June 2015).

5.0 LIMITATIONS AND UNIFORMITY OF CONDITIONS

This report presents geotechnical recommendations for design of the improvements discussed in Section 1.3. If changes occur in the nature or design of the project, we should be allowed to

review this report and provide additional recommendations, if any. It is the responsibility of the owner to transmit the information and recommendations of this report to the appropriate organizations or people involved in design of the project, including but not limited to architects, engineers, and designers. The conclusions and recommendations contained in this report are solely professional opinions and are valid for a period of no more than 2 years from the date of report issuance.

We strived to perform our professional services in accordance with generally accepted geotechnical engineering principles and practices currently employed in the area; no warranty is expressed or implied. There are risks of earth movement and property damages inherent in building on or with earth materials. We are unable to eliminate all risks or provide insurance; therefore, we are unable to guarantee or warrant the results of our services.

This report is based upon field and other conditions discovered at the time of report preparation. We developed this report with limited subsurface exploration data. We assumed that our subsurface exploration data is representative of the actual subsurface conditions across the site. Considering possible underground variability of soil, rock, and groundwater, additional costs may be required to complete the project. We recommend that the owner establish a contingency fund to cover such costs. If unexpected conditions are encountered, notify us immediately to review these conditions and provide additional and/or modified recommendations, as necessary.

Our services did not include excavation sloping or shoring, soil volume change factors, or flood potential. In addition, our geotechnical exploration did not include work to determine the existence of possible hazardous materials. If any hazardous materials are encountered during construction, notify the proper regulatory officials immediately.

This document must not be subject to unauthorized reuse, that is, reusing without our written authorization. Such authorization is essential because it requires us to evaluate the document's applicability given new circumstances, not the least of which is passage of time.

Actual field or other conditions will necessitate clarifications, adjustments, modifications or other changes to our documents. Therefore, we must be engaged to prepare the necessary clarifications, adjustments, modifications or other changes before construction activities commence or further activity proceeds. If our scope of services does not include construction observation, or if other persons or entities are retained to provide such services, we cannot be held responsible for any or all claims arising from or resulting from the performance of such services by other persons or entities, and from any or all claims arising from or resulting from clarifications, adjustments, modifications, discrepancies or other changes necessary to reflect changed field or other conditions.

We determined the lines designating the interface between layers on the exploration logs using visual observations. The transition between the materials may be abrupt or gradual. The exploration logs contain information concerning samples recovered, indications of the presence of various materials such as clay, sand, silt, rock, existing fill, etc., and observations of groundwater encountered. The field logs also contain our interpretation of the subsurface

conditions between sample locations. Therefore, the logs contain both factual and interpretative information. Our recommendations are based on the contents of the final logs, which represent our interpretation of the field logs.

REFERENCES

American Association of State Highway and Transportation Officials (AASHTO), 2012, AASHTO LRFD Bridge Design Specifications, 6th Edition.

American Concrete Institute, 2005, Building Code Requirements for Structural Concrete (ACI 318-05) and Commentary (ACI 318R-05).

American Society of Civil Engineers, 2005, Minimum Design Loads for Buildings and Other Structures, ASCE Standard, ASCE/SEI 7-05.

Brown, D.A., C. Morris, L.C. Reese, 1988, Lateral Load Behavior of Pile Group, Journal of Geotechnical Engineering, Vol. 114, No. 11, November 1988.

California Department of Transportation, 2012, Highway Design Manual.

California Department of Transportation, 2012, Corrosion Guidelines, Version 2.0, November 2012.

California Department of Transportation, 2013, Seismic Design Criteria, Version 1.7, April 2013.

California Department of Transportation, 2015, Bridge Design Practice.

California Department of Transportation, 2015, Standard Plans.

ENGEO; Geotechnical Exploration, 400 and 450 Montague Expressway, Milpitas, California, Project No. 12074.000.000; June 17, 2015.

ENGEO; Preliminary Pedestrian Overcrossing and Vehicular Bridge Foundation Recommendations, Pedestrian Overcrossing and Vehicular Bridge, 400 and 450 Montague Expressway, Milpitas, California; August 20, 2015 (DRAFT); Project No. 12074.000.002.

ENGEO; Preliminary Pile Design Soil Input Criteria, Pedestrian Overcrossing and Vehicular Bridge, 400 and 450 Montague Expressway, Milpitas, California, Project No. 12074.000.002; July 29, 2015.

Brown, D.A., Turner, J.P., and Castelli, R.J., 2010, Federal Highway Administration (FHWA), Report No. FHWA NHI-10-016.

State of California, Division of Mines and Geology (CDMG), 1982, Earthquake Fault Hazard Zones Map (previously named Special Studies Zones Map), Milpitas Quadrangle.

REFERENCES (Continued)

State of California, California Department of Conservation, California Geologic Survey (CGS), 2001, Seismic Hazard Zone Report, Milpitas Quadrangle.

State of California, Department of Conservation, Division of Mines and Geology (DMG), 2004, Seismic Hazard Zone Map, Milpitas Quadrangle.

USGS, 2015, Quaternary Fault and Fold Database.

Wentworth et al., 1999, Preliminary Geologic Map of the San Jose 30 x 60-Minute Quadrangle, California, U.S. Geological Survey, Open-File 98-795 Part 7.

FIGURES

Figure 1 – Vicinity Map
Figure 2 – Site Plan
Figure 3 – Regional Geologic Map
Figure 4 – Seismic Hazard Zone Map
Figure 5 – Regional Faulting and Seismicity Map
Figure 6 – Caltrans ARS Curve

COPYRIGHT © 2016 BY ENGEO INCORPORATED. THIS DOCUMENT MAY NOT BE REPRODUCED IN WHOLE OR IN PART BY ANY MEANS WHATSOEVER, NOR MAY IT BE QUOTED OR EXCERPTED WITHOUT THE EXPRESS WRITTEN CONSENT OF ENGEO INCORPORATED.

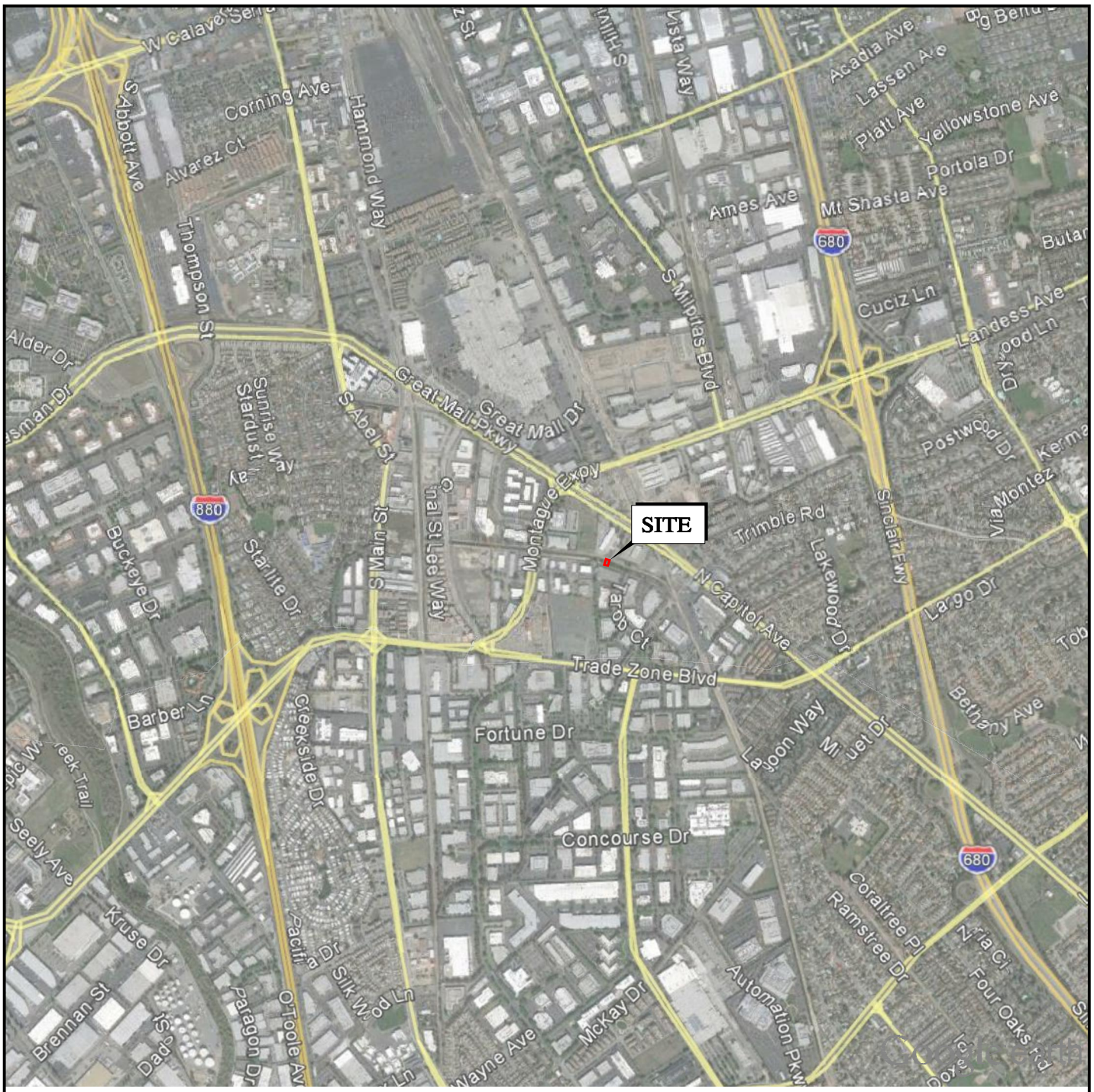

N

0 FEET 2000

0 METERS 1000

BASE MAP SOURCE: GOOGLE EARTH MAPPING SERVICE

ENGEO Expect Excellence

VICINITY MAP

400 AND 450 MONTAGUE EXPRESSWAY - VEHICULAR BRIDGE

MILPITAS, CALIFORNIA

PROJECT NO.:	12074.000.002
SCALE:	AS SHOWN
DRAWN BY: PC	CHECKED BY: AF

FIGURE NO. 1

G:\Drafting\DRAFTING2_Dwg_10000 to 12999\12074\000\GEX-0916\12074000002-GEX-1-VicMap-0916.dwg Plot Date: 9-28-16 llee

ORIGINAL FIGURE PRINTED IN COLOR

COPYRIGHT © 2015 BY ENGEO INCORPORATED. THIS DOCUMENT MAY NOT BE REPRODUCED IN WHOLE OR IN PART BY ANY MEANS WHATSOEVER, NOR MAY IT BE QUOTED OR EXCERPTED WITHOUT THE EXPRESS WRITTEN CONSENT OF ENGEO INCORPORATED.

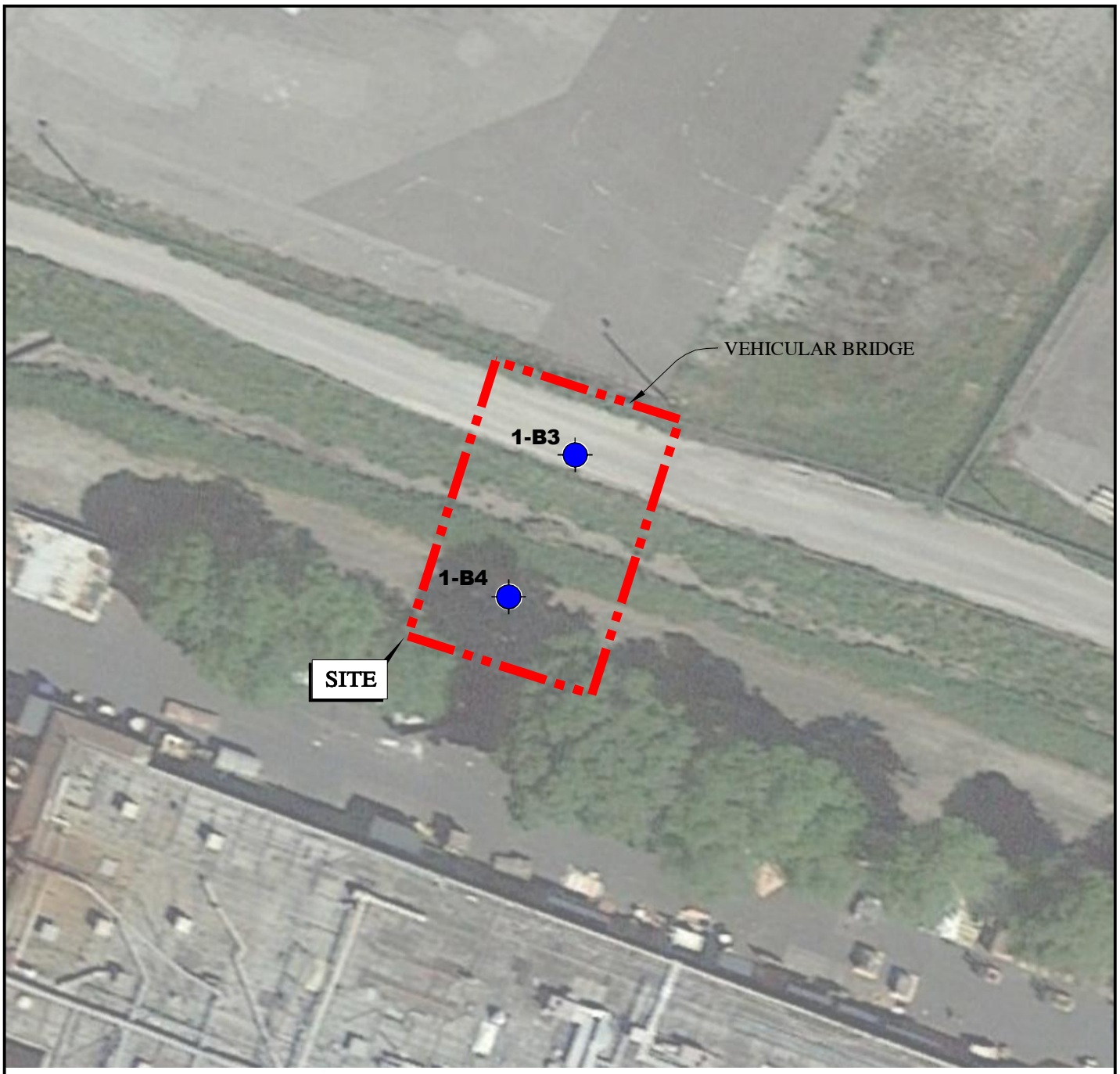

N

0 FEET 40
0 METERS 20

EXPLANATION

ALL LOCATIONS ARE APPROXIMATE

1-B4 BORING (ENGEO, 2016)

BASE MAP SOURCE: GOOGLE EARTH MAPPING SERVICE

ENGEO Expect Excellence

SITE PLAN

400 AND 450 MONTAGUE EXPRESSWAY - VEHICULAR BRIDGE

MILPITAS, CALIFORNIA

PROJECT NO.: 12074.000.002		FIGURE NO.
SCALE: AS SHOWN		2
DRAWN BY: LL	CHECKED BY: AF	

G:\Drafting\DRAFTING2_Dwg_10000 to 12999\12074\000\GEX-0916\12074000002-GEX-2-SitePlan-0916.dwg Plot Date: 9-28-16 llee

ORIGINAL FIGURE PRINTED IN COLOR

COPYRIGHT © 2016 BY ENGEO INCORPORATED. THIS DOCUMENT MAY NOT BE REPRODUCED IN WHOLE OR IN PART BY ANY MEANS WHATSOEVER, NOR MAY IT BE QUOTED OR EXCERPTED WITHOUT THE EXPRESS WRITTEN CONSENT OF ENGEO INCORPORATED.

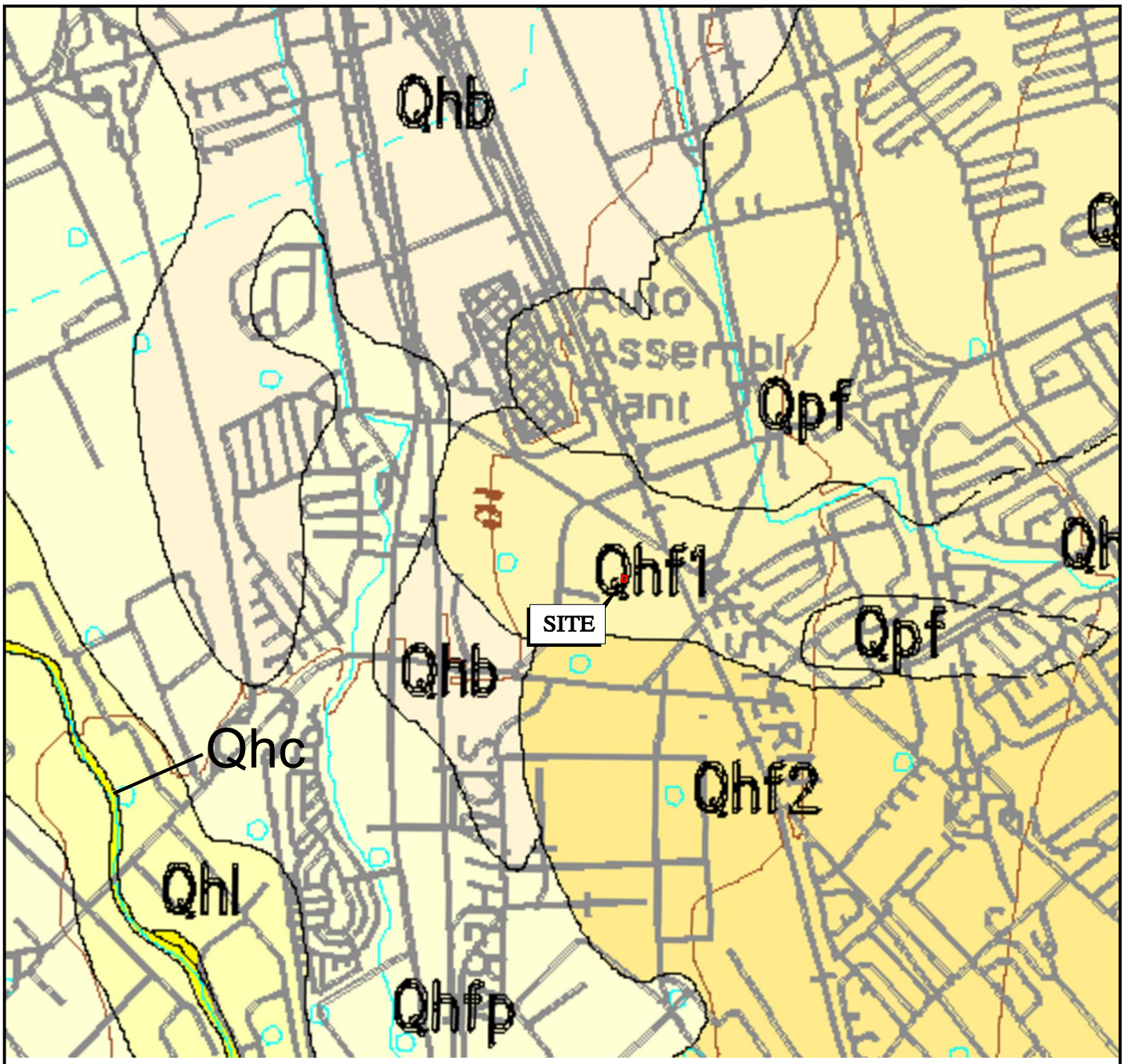

N

0 FEET 2000

0 METERS 1000

EXPLANATION

——— – – – –	GEOLOGIC CONTACT-DASHED WHERE GRADATIONAL OR APPROXIMATELY LOCATED
Qhb	BASIN DEPOSITS
Qhfp	FLOOD PLAIN DEPOSITS
Qhl	LEVEE DEPOSITS
Qhc	STREAM CHANNEL DEPOSITS
Qhf1	ALLUVIAL FAN DEPOSITS (YOUNGER)
Qhf2	ALLUVIAL FAN DEPOSITS (OLDER)
Qpf	ALLUVIAL FAN DEPOSITS

BASE MAP SOURCE: WENTWORTH, 1999

ENGEO Expect Excellence

REGIONAL GEOLOGIC MAP

400 AND 450 MONTAGUE EXPRESSWAY - VEHICULAR BRIDGE

MILPITAS, CALIFORNIA

PROJECT NO.: 12074.000.002

SCALE: AS SHOWN

DRAWN BY: PC CHECKED BY: AF

FIGURE NO. 3

G:\Drafting\DRAFTING2_Dwg_10000 to 12999\12074\000\GEX-0916\12074000002-GEX-3-RegGeoMap-0916.dwg Plot Date: 9-28-16 llee

ORIGINAL FIGURE PRINTED IN COLOR

COPYRIGHT © 2016 BY ENGEO INCORPORATED. THIS DOCUMENT MAY NOT BE REPRODUCED IN WHOLE OR IN PART BY ANY MEANS WHATSOEVER, NOR MAY IT BE QUOTED OR EXCERPTED WITHOUT THE EXPRESS WRITTEN CONSENT OF ENGEO INCORPORATED.

N

0 FEET 4000

0 METERS 2000

EXPLANATION

LIQUEFACTION

AREAS WHERE HISTORIC OCCURRENCE OF LIQUEFACTION, OR LOCAL GEOLOGICAL, GEOTECHNICAL AND GROUNDWATER CONDITIONS INDICATE A POTENTIAL FOR PERMANENT GROUND DISPLACEMENTS SUCH THAT MITIGATION AS DEFINED IN PUBLIC RESOURCES CODE SECTION 2693(c) WOULD BE REQUIRED

BASE MAP SOURCE: CALIFORNIA DEPARTMENT OF CONSERVATION, CALIFORNIA GEOLOGICAL SURVEY, 2006

ENGEO Expect Excellence

SEISMIC HAZARD ZONE MAP

400 AND 450 MONTAGUE EXPRESSWAY - VEHICULAR BRIDGE

MILPITAS, CALIFORNIA

PROJECT NO.: 12074.000.002		FIGURE NO.
SCALE: AS SHOWN		4
DRAWN BY: PC	CHECKED BY: AF	

G:\Drafting\DRAFTING2_Dwg_10000 to 12999\12074\000\GEX-0916\12074000002-GEX-4-SeismicHazMap-0916.dwg Plot Date: 9-28-16 llee

ORIGINAL FIGURE PRINTED IN COLOR

COPYRIGHT © 2016 BY ENGEO INCORPORATED. THIS DOCUMENT MAY NOT BE REPRODUCED IN WHOLE OR IN PART BY ANY MEANS WHATSOEVER, NOR MAY IT BE QUOTED OR EXCERPTED WITHOUT THE EXPRESS WRITTEN CONSENT OF ENGEO INCORPORATED.

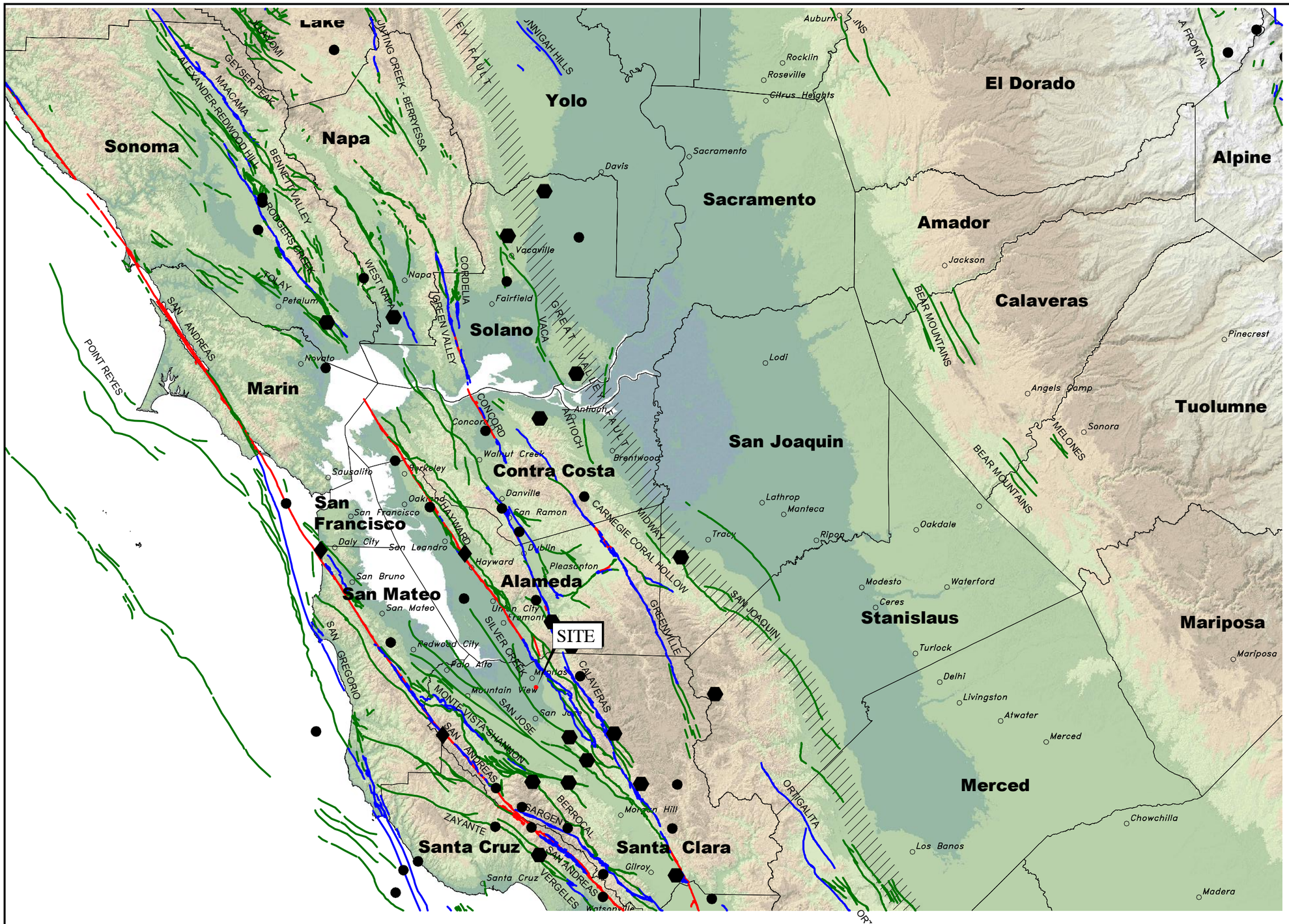

BASE MAP SOURCE:
COLOR HILLSHADE IMAGE BASED ON THE NATIONAL ELEVATION DATASET (NED) AT 30 METER RESOLUTION
U.S.G.S. QUATERNARY FAULT DATABASE, NOVEMBER, 2010
U.S.G.S. HISTORIC EARTHQUAKE DATABASE (1800–2000)

ENGEO Expect Excellence

REGIONAL FAULTING AND SEISMICITY
400 AND 450 MONTAGUE EXPRESSWAY - VEHICULAR BRIDGE
MILPITAS, CALIFORNIA

PROJECT NO.: 12074.000.002	FIGURE NO 5
SCALE: AS SHOWN	
DRAWN BY: PC	CHECKED BY: AF

ORIGINAL FIGURE PRINTED IN COLOR

G:\Drafting\DRAFTING2_Dwg_10000 to 12999\12074\000\GEX-0916\12074000002-GEX-5-RegFaultSeismicMap-0916.dwg Plot Date: 9-28-16 llee

COPYRIGHT © 2016 BY ENGEO INCORPORATED. THIS DOCUMENT MAY NOT BE REPRODUCED IN WHOLE OR IN PART BY ANY MEANS WHATSOEVER, NOR MAY IT BE QUOTED OR EXCERPTED WITHOUT THE EXPRESS WRITTEN CONSENT OF ENGEO INCORPORATED.

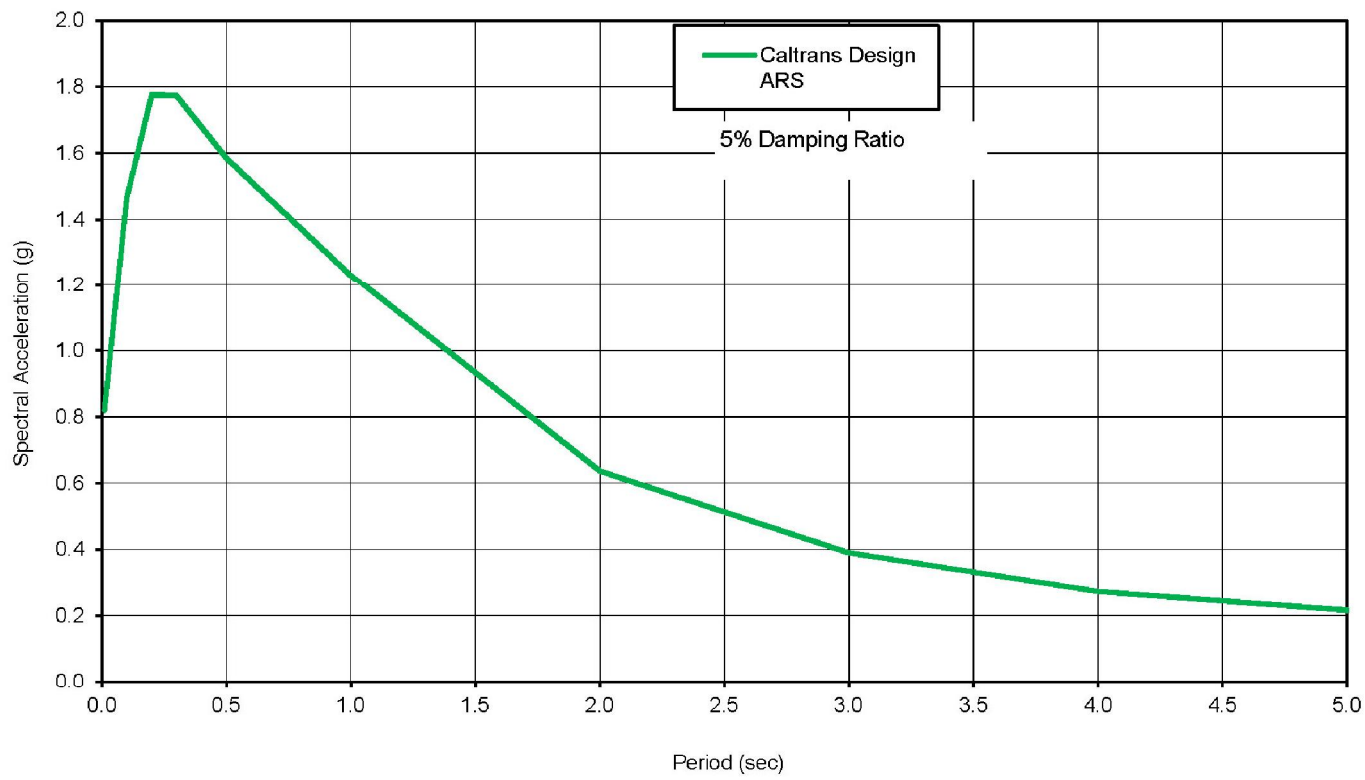

Peak Ground Acceleration (PGA)= 0.82 g
Shear Wave Velocity (Vs30) = 300 m/s

Spectral Coordinates

Period (s)	Acc. (g)
0.010	0.821
0.100	1.466
0.200	1.776
0.300	1.774
0.500	1.586
1.000	1.232
2.000	0.637
3.000	0.391
4.000	0.274
5.000	0.218

ENGEO Expect Excellence

ARS CURVE
400 AND 450 MONTAGUE EXPRESSWAY - VEHICULAR BRIDGE
MILPITAS, CALIFORNIA

PROJECT NO.: 12074.000.002
SCALE: NO SCALE
DRAWN BY: LL
CHECKED BY: AF
FIGURE NO. 6

G:\Drafting\DRAFTING2_Dwg_10000 to 12999\12074\000\GEX-0916\12074000002-GEX-6-ARSCURVES-0916.dwg Plot Date: 9-28-16 llee

ORIGINAL FIGURE PRINTED IN COLOR

APPENDIX A

Key to Boring Logs
Exploration Logs

APPENDIX A

KEY TO BORING LOGS

MAJOR TYPES			DESCRIPTION
COARSE-GRAINED SOILS MORE THAN HALF OF MAT'L LARGER THAN #200 SIEVE	GRAVELS MORE THAN HALF COARSE FRACTION IS LARGER THAN NO. 4 SIEVE SIZE	CLEAN GRAVELS WITH LESS THAN 5% FINES	GW - Well graded gravels or gravel-sand mixtures GP - Poorly graded gravels or gravel-sand mixtures
		GRAVELS WITH OVER 12 % FINES	GM - Silty gravels, gravel-sand and silt mixtures GC - Clayey gravels, gravel-sand and clay mixtures
	SANDS MORE THAN HALF COARSE FRACTION IS SMALLER THAN NO. 4 SIEVE SIZE	CLEAN SANDS WITH LESS THAN 5% FINES	SW - Well graded sands, or gravelly sand mixtures SP - Poorly graded sands or gravelly sand mixtures
		SANDS WITH OVER 12 % FINES	SM - Silty sand, sand-silt mixtures SC - Clayey sand, sand-clay mixtures
FINE-GRAINED SOILS MORE THAN HALF OF MAT'L SMALLER THAN #200 SIEVE	SILTS AND CLAYS LIQUID LIMIT 50 % OR LESS		ML - Inorganic silt with low to medium plasticity CL - Inorganic clay with low to medium plasticity OL - Low plasticity organic silts and clays
	SILTS AND CLAYS LIQUID LIMIT GREATER THAN 50 %		MH - Elastic silt with high plasticity CH - Fat clay with high plasticity OH - Highly plastic organic silts and clays
	HIGHLY ORGANIC SOILS		PT - Peat and other highly organic soils

For fine-grained soils with 15 to 29% retained on the #200 sieve, the words "with sand" or "with gravel" (whichever is predominant) are added to the group name.

For fine-grained soil with >30% retained on the #200 sieve, the words "sandy" or "gravelly" (whichever is predominant) are added to the group name.

GRAIN SIZES

U.S. STANDARD SERIES SIEVE SIZE				CLEAR SQUARE SIEVE OPENINGS			
200	40	10	4	3/4 "	3"	12"	
SILTS AND CLAYS	SAND			GRAVEL		COBBLES	BOULDERS
	FINE	MEDIUM	COARSE	FINE	COARSE		

RELATIVE DENSITY

SANDS AND GRAVELS	BLOWS/FOOT (S.P.T.)
VERY LOOSE	0-4
LOOSE	4-10
MEDIUM DENSE	10-30
DENSE	30-50
VERY DENSE	OVER 50

CONSISTENCY

SILTS AND CLAYS	STRENGTH*
VERY SOFT	0-1/4
SOFT	1/4-1/2
MEDIUM STIFF	1/2-1
STIFF	1-2
VERY STIFF	2-4
HARD	OVER 4

SAMPLER SYMBOLS

- Modified California (3" O.D.) sampler
- California (2.5" O.D.) sampler
- S.P.T. - Split spoon sampler
- Shelby Tube
- Continuous Core
- Bag Samples
- Grab Samples
- NR No Recovery

MOISTURE CONDITION

Dry	Dusty, dry to touch
Moist	Damp but no visible water
Wet	Visible freewater

LINE TYPES

- Solid - Layer Break
- Dashed - Gradational or approximate layer break

GROUND-WATER SYMBOLS

- Groundwater level during drilling
- Stabilized groundwater level

(S.P.T.) Number of blows of 140 lb. hammer falling 30" to drive a 2-inch O.D. (1-3/8 inch I.D.) sampler

* Unconfined compressive strength in tons/sq. ft., asterisk on log means determined by pocket penetrometer

ENGEO
Expect Excellence

LOG OF BORING 1-B3

ENGEO INCORPORATED

Geotechnical Exploration
Vehicular Bridge
Milpitas, CA
12074.000.002

DATE DRILLED: 8/17/2016
HOLE DEPTH: Approx. 57½ ft.
HOLE DIAMETER: 6.0 in.
SURF ELEV (NGVD 29): Approx. 43 ft.

LOGGED / REVIEWED BY: S. Barua / RB
DRILLING CONTRACTOR: Geo-Ex Subsurface
DRILLING METHOD: SSA, Switch to Mud
HAMMER TYPE: 140 lb. Auto Trip

Depth in Feet	Elevation in Feet	Sample Type	DESCRIPTION	Log Symbol	Water Level	Blow Count/Foot	Atterberg Limits: Liquid Limit	Atterberg Limits: Plastic Limit	Atterberg Limits: Plasticity Index	Fines Content (% passing #200 sieve)	Moisture Content (% dry weight)	Dry Unit Weight (pcf)	Unconfined Strength (tsf) *field approx
			GRAVELLY LEAN CLAY (CL), grayish brown, stiff, slightly moist, subrounded gravel, (FILL)			15							1.5*
			FAT CLAY (CH), dark brown, stiff, slightly moist										
	40												
			Becomes very stiff.			13							3.5*
5													
			Becomes dark gray mottled with orange.			9					27.4	87.2	2.5*
	35												
10													
			Becomes stiff, moist.		▽	12							1.75*
	30												
15													
			Becomes dark gray to black.			14							1.75*
	25												
20													
			Becomes very stiff, wet.			100 psi 250 400 500 600					21	106.5	
	20		SILT (ML), dark grayish brown, stiff to very stiff, moist to wet										
25													

LOG - GEOTECHNICAL W/ELEV. 12074000002_MONTAGUE BRIDGE ABUTMENT_GINT LOGS.GPJ ENGEO INC.GDT 9/27/16

LOG OF BORING 1-B3

ENGEO INCORPORATED

Geotechnical Exploration
Vehicular Bridge
Milpitas, CA
12074.000.002

DATE DRILLED: 8/17/2016
HOLE DEPTH: Approx. 57½ ft.
HOLE DIAMETER: 6.0 in.
SURF ELEV (NGVD 29): Approx. 43 ft.

LOGGED / REVIEWED BY: S. Barua / RB
DRILLING CONTRACTOR: Geo-Ex Subsurface
DRILLING METHOD: SSA, Switch to Mud
HAMMER TYPE: 140 lb. Auto Trip

Depth in Feet	Elevation in Feet	Sample Type	DESCRIPTION	Log Symbol	Water Level	Blow Count/Foot	Atterberg Limits: Liquid Limit	Atterberg Limits: Plastic Limit	Atterberg Limits: Plasticity Index	Fines Content (% passing #200 sieve)	Moisture Content (% dry weight)	Dry Unit Weight (pcf)	Unconfined Strength (tsf) *field approx
			Switch to mud rotary drilling method										
			SANDY LEAN CLAY (CL), dark gray mottled with light gray, stiff, moist, fine-grained sand			19				51			
30	15												
			FAT CLAY (CH), dark yellowish brown, very stiff, moist			16							2.25*
35	10												
			Becomes stiff.			13							1.75*
40	5												
			Becomes medium stiff.			18					22.9	101.9	0.75*
45	0												
			Becomes stiff.			18							1.25*
50	-5												

LOG - GEOTECHNICAL W/ELEV. 12074000002_MONTAGUE BRIDGE ABUTMENT_GINT LOGS.GPJ ENGEO INC.GDT 9/27/16

LOG OF BORING 1-B3

Geotechnical Exploration
Vehicular Bridge
Milpitas, CA
12074.000.002

DATE DRILLED: 8/17/2016
HOLE DEPTH: Approx. 57½ ft.
HOLE DIAMETER: 6.0 in.
SURF ELEV (NGVD 29): Approx. 43 ft.

LOGGED / REVIEWED BY: S. Barua / RB
DRILLING CONTRACTOR: Geo-Ex Subsurface
DRILLING METHOD: SSA, Switch to Mud
HAMMER TYPE: 140 lb. Auto Trip

Depth in Feet	Elevation in Feet	Sample Type	DESCRIPTION	Log Symbol	Water Level	Blow Count/Foot	Atterberg Limits: Liquid Limit	Atterberg Limits: Plastic Limit	Atterberg Limits: Plasticity Index	Fines Content (% passing #200 sieve)	Moisture Content (% dry weight)	Dry Unit Weight (pcf)	Unconfined Strength (tsf) *field approx
			Same as above.			22							1.25*
	-10												
55			Same as above.			23					20.9	104.3	1.75*
			Bottom of boring at approximately 57½ feet below ground surface. Groundwater encountered during solid-flight drilling operations at approximately 11 feet below ground surface.										

LOG - GEOTECHNICAL W/ELEV. 12074000002_MONTAGUE BRIDGE ABUTMENT_GINT LOGS.GPJ ENGEO INC.GDT 9/27/16

LOG OF BORING 1-B4

ENGEO INCORPORATED

Geotechnical Exploration
Vehicular Bridge
Milpitas, CA
12074.000.002

DATE DRILLED: 8/18/2016
HOLE DEPTH: Approx. 61½ ft.
HOLE DIAMETER: 6.0 in.
SURF ELEV (NGVD 29): Approx. 42 ft.

LOGGED / REVIEWED BY: S. Barua / RB
DRILLING CONTRACTOR: Geo-Ex Subsurface
DRILLING METHOD: SSA, Switch to Mud
HAMMER TYPE: 140 lb. Auto Trip

Depth in Feet	Elevation in Feet	Sample Type	DESCRIPTION	Log Symbol	Water Level	Blow Count/Foot	Atterberg Limits: Liquid Limit	Atterberg Limits: Plastic Limit	Atterberg Limits: Plasticity Index	Fines Content (% passing #200 sieve)	Moisture Content (% dry weight)	Dry Unit Weight (pcf)	Unconfined Strength (tsf) *field approx
	40		LEAN CLAY (CL), dark brown mottled with yellowish brown, hard, slightly moist, rootlets			28							4.5+*
5			Same as above.			15							4.5*
	35		FAT CLAY (CH), dark yellowish brown mottled with orange, stiff to very stiff, moist, rootlets			8							2.0*
10			Becomes dark grayish brown mottled with orange, no rootlets.		▽	10							2.0*
	30												
15			Becomes dark gray, very stiff.			50 psi 100 150 250 400					28.1	92.1	
	25												
			Switch to mud rotary drilling method										
20			Becomes dark grayish brown, hard, moist to wet.			18							4.25*
	20												
25													

LOG - GEOTECHNICAL W/ELEV. 12074000002_MONTAGUE BRIDGE ABUTMENT_GINT LOGS.GPJ ENGEO INC.GDT 9/27/16

LOG OF BORING 1-B4

ENGEO INCORPORATED

Geotechnical Exploration
Vehicular Bridge
Milpitas, CA
12074.000.002

DATE DRILLED: 8/18/2016
HOLE DEPTH: Approx. 61½ ft.
HOLE DIAMETER: 6.0 in.
SURF ELEV (NGVD 29): Approx. 42 ft.

LOGGED / REVIEWED BY: S. Barua / RB
DRILLING CONTRACTOR: Geo-Ex Subsurface
DRILLING METHOD: SSA, Switch to Mud
HAMMER TYPE: 140 lb. Auto Trip

Depth in Feet	Elevation in Feet	Sample Type	DESCRIPTION	Log Symbol	Water Level	Blow Count/Foot	Atterberg Limits: Liquid Limit	Atterberg Limits: Plastic Limit	Atterberg Limits: Plasticity Index	Fines Content (% passing #200 sieve)	Moisture Content (% dry weight)	Dry Unit Weight (pcf)	Unconfined Strength (tsf) *field approx
			SANDY LEAN CLAY (CL), dark olive brown, medium stiff to stiff, moist, fine-grained sand, <5% subrounded gravel			7				55	20.2	108.3	1.0*
30	15		Becomes fine- to medium-grained sand.			26							2.0*
	10		LEAN CLAY (CL), dark yellowish brown mottled with orange, stiff to very stiff, moist										
35			Becomes dark gray mottled with yellowish brown.			15	33	17	16				1.5*
	5												
40			FAT CLAY (CH), gray with yellowish brown, stiff, moist			19							1.75*
	0												
45			Becomes olive brown mottled with orangeish brown.			15					22	97.6	
	-5												
50													

LOG - GEOTECHNICAL W/ELEV. 12074000002_MONTAGUE BRIDGE ABUTMENT_GINT LOGS.GPJ ENGEO INC.GDT 9/27/16

LOG OF BORING 1-B4

ENGEO INCORPORATED

Geotechnical Exploration
Vehicular Bridge
Milpitas, CA
12074.000.002

DATE DRILLED: 8/18/2016
HOLE DEPTH: Approx. 61½ ft.
HOLE DIAMETER: 6.0 in.
SURF ELEV (NGVD 29): Approx. 42 ft.

LOGGED / REVIEWED BY: S. Barua / RB
DRILLING CONTRACTOR: Geo-Ex Subsurface
DRILLING METHOD: SSA, Switch to Mud
HAMMER TYPE: 140 lb. Auto Trip

Depth in Feet	Elevation in Feet	Sample Type	DESCRIPTION	Log Symbol	Water Level	Blow Count/Foot	Atterberg Limits: Liquid Limit	Atterberg Limits: Plastic Limit	Atterberg Limits: Plasticity Index	Fines Content (% passing #200 sieve)	Moisture Content (% dry weight)	Dry Unit Weight (pcf)	Unconfined Strength (tsf) *field approx
			Becomes olive brown.			17							1.75*
	-10												
55			Becomes olive brown mottled with dark gray, very stiff, <5% fine gravel			22							2.75*
	-15												
60			Becomes olive brown mottled with light brown.			23							3.5*
			Bottom of boring at approximately 61½ feet below ground surface. Groundwater encountered during solid-flight drilling operations at approximately 11 feet below ground surface.										

LOG - GEOTECHNICAL W/ELEV. 12074000002_MONTAGUE BRIDGE ABUTMENT_GINT LOGS.GPJ ENGEO INC.GDT 9/27/16

APPENDIX B

Laboratory Test Data
(ENGEO, 2016)

APPENDIX B

Particle Size Distribution Report

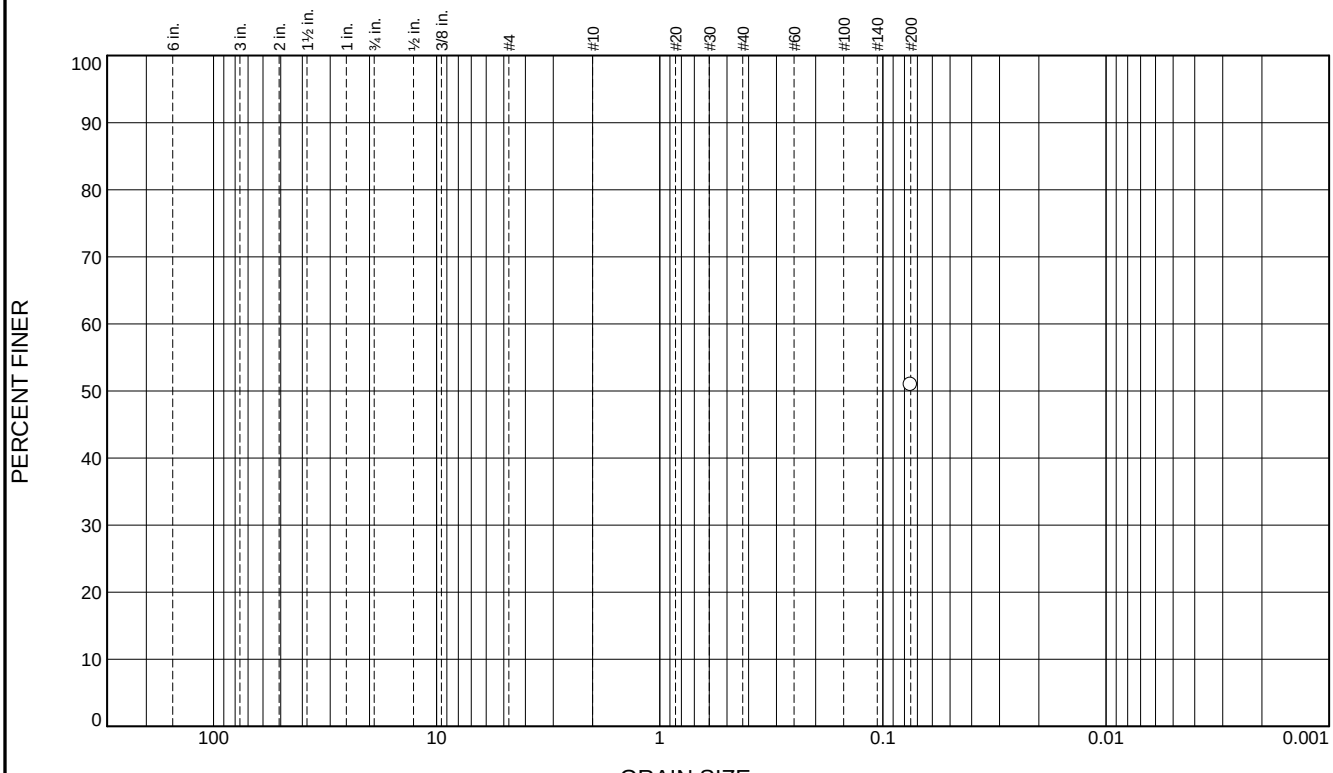

% +75mm	% Gravel		% Sand			% Fines	
	Coarse	Fine	Coarse	Medium	Fine	Silt	Clay
						50.9	

SIEVE SIZE	PERCENT FINER	SPEC.* PERCENT	PASS? (X=NO)
#200	50.9		

* (no specification provided)

Soil Description

See Exploration Log

Atterberg Limits

PL= LL= PI=

Coefficients

D_{90}= D_{85}= D_{60}=
D_{50}= D_{30}= D_{15}=
D_{10}= C_u= C_c=

Classification

USCS= AASHTO=

Remarks

ASTM D1140

Sample Number: 1-B3 @ 27-27.5 **Depth:** 27-27.5

Date: 8-26-16

ENGEO INCORPORATED

Client: Lennar Homes of California
Project: Montague Expressway, Bridge Abutment

Project No: 12074.000.002 **Figure**

Tested By: I. McCauley **Checked By:** K. Lecce

Particle Size Distribution Report

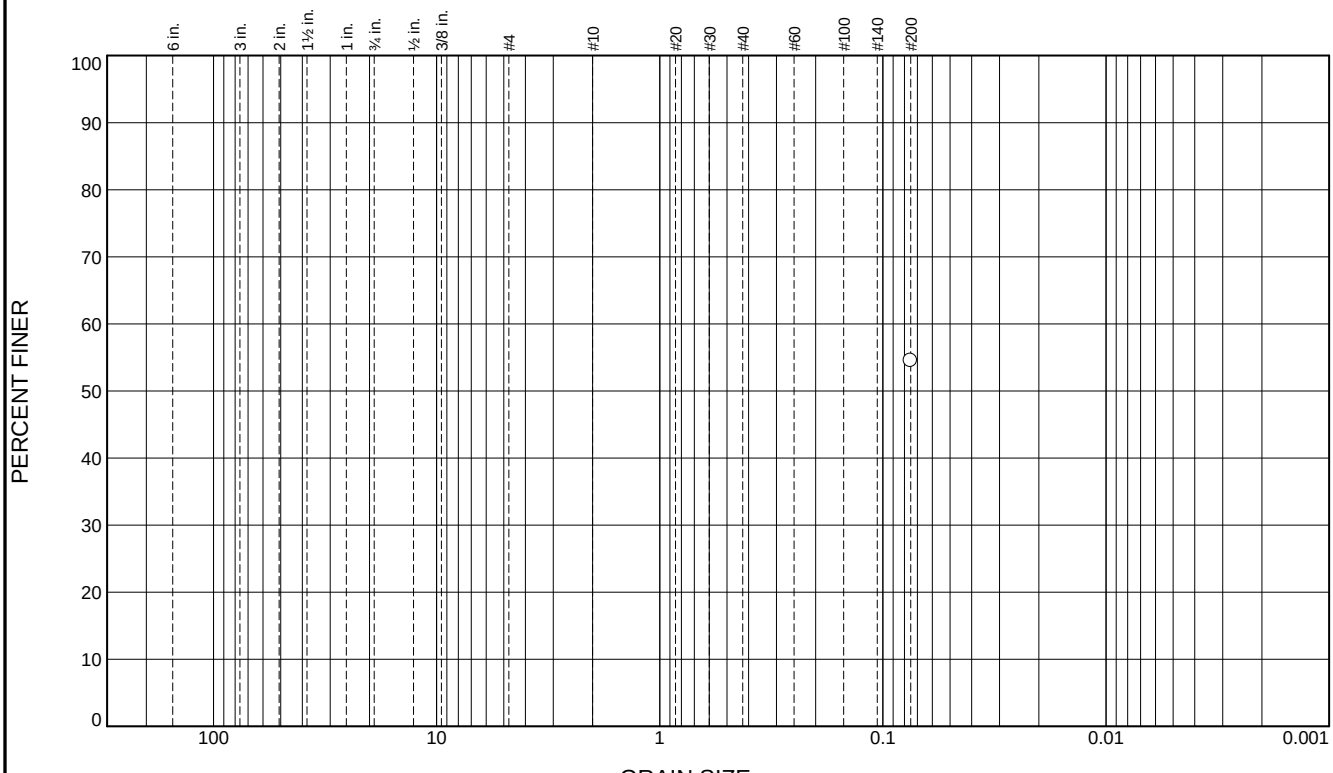

% +75mm	% Gravel		% Sand			% Fines	
	Coarse	Fine	Coarse	Medium	Fine	Silt	Clay
						54.5	

SIEVE SIZE	PERCENT FINER	SPEC.* PERCENT	PASS? (X=NO)
#200	54.5		

* (no specification provided)

Soil Description

See Exploration Log

Atterberg Limits

PL= LL= PI=

Coefficients

D_{90}= D_{85}= D_{60}=
D_{50}= D_{30}= D_{15}=
D_{10}= C_u= C_c=

Classification

USCS= AASHTO=

Remarks

ASTM D1140

Sample Number: 1-B4 @ 26-26.5 **Depth:** 26-26.5

Date: 8-26-16

ENGEO INCORPORATED

Client: Lennar Homes of California
Project: Montague Expressway, Bridge Abutment

Project No: 12074.000.002 **Figure**

Tested By: I. McCauley **Checked By:** K. Lecce

LIQUID AND PLASTIC LIMITS TEST REPORT

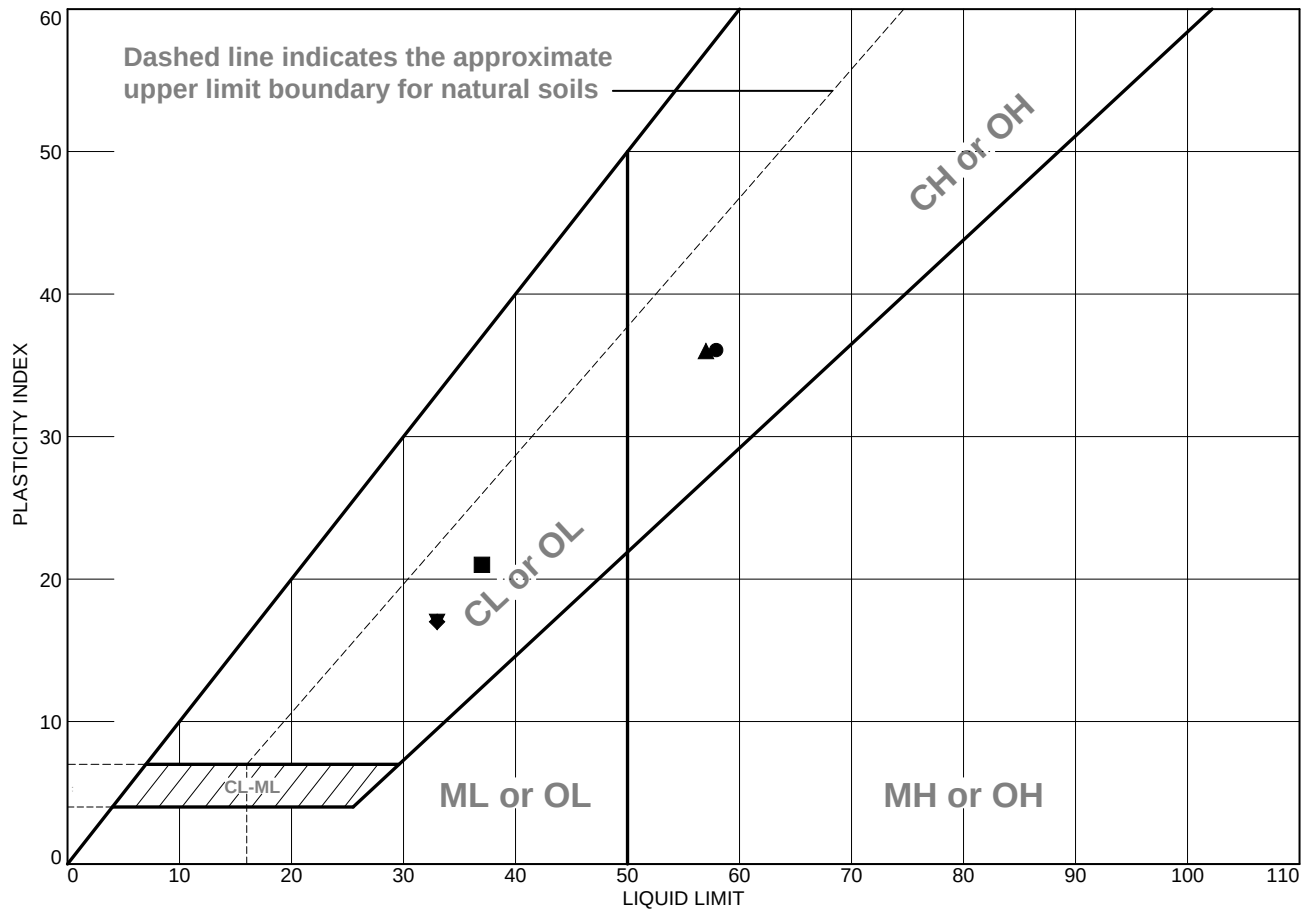

	MATERIAL DESCRIPTION	LL	PL	PI	%<#40	%<#200	USCS
●	See Exploration Log	58	22	36			
■	See Exploration Log	37	16	21		76.6	
▲	See Exploration Log	57	21	36			
◆	See Exploration Log	33	16	17		78.6	
▼	See Exploration Log	33	16	17			

Project No. 12074.000.002 **Client:** Lennar Homes of California

Project: Montague Expressway, Bridge Abutment

●**Depth:** 5.5 **Sample Number:** 1-B1 @ 5-5.5
■**Depth:** 52-52.5 **Sample Number:** 1-B1 @ 52-52.5
▲**Depth:** 6-6.5 **Sample Number:** 1-B2 @ 6-6.5
◆**Depth:** 56-56.5 **Sample Number:** 1-B2 @ 56-56.5
▼**Depth:** 36-36.5 **Sample Number:** 1-B4 @ 36-36.5

Remarks:
●ASTM D4318, wet method
■ASTM D4318, wet method
ASTM D1140
▲ASTM D4318, wet method
◆ASTM D4318, wet method
ASTM D1140
▼ASTM D4318, wet method

ENGEO INCORPORATED

Figure

Tested By: ○ K. Lecce □ M. Havey △ K. Lecce ◇ K. Lecce ▽ M. Havey **Checked By:** I. McCauley

LABORATORY MINIATURE VANE SHEAR

ASTM D4648

APPARATUS USED: Wykeham Farrance, Model 27-WF1730/4

Sample #	Sample ID	Remold? (Y/N)	Test depth (ft)	Spring number	Shear strength (psf)
1	1-B1 @ 11-13.5	N	12-12.25	3	1173
2	1-B2 @ 10-12.5	N	11-11.25	3	1104
3	1-B3 @ 21-23.5	N	22-22.25	3	2484
4	1-B4 @ 15-17.5	N	16-16.25	4	2245

Testing remarks:

PROJECT NAME: Montague Expressway, Bridge Abutment
PROJECT NUMBER: 12074.000.002
CLIENT: Lennar Hoimes of California
PHASE NUMBER: 002

DATE: 08/24/16

ENGEO
Expect Excellence

Tested by: G. Criste

Reviewed by: D. Seibold

Isotropic Unconsolidated Undrained Triaxial Test

(ASTM D2850)

Date: 08/29/16

Checked By: J. Ruffoni

Date: 8/28/2016

Tested By: K. Lecce

Mohr Circles

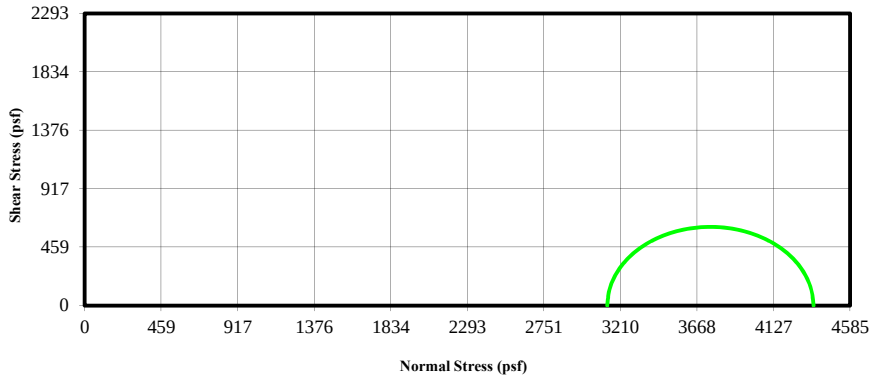

1-B3 @ 42-42.5

Stress-Strain Curve

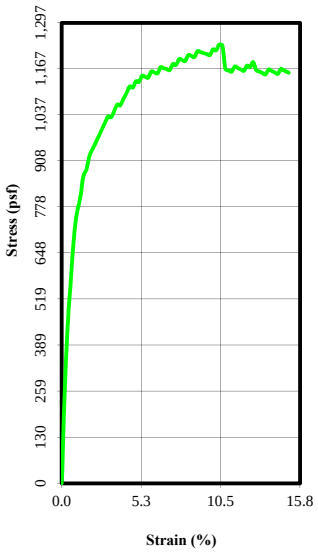

Before Test	Specimen 1-B3 @ 42-42.5			
Water Content (%)	22.91			
Dry Density (pcf)	101.93			
Saturation (%)	97.45			
Void Ratio	0.62			
Diameter (in)	2.407			
Height (in)	5.085			
Height-to-Diameter Ratio	2.113			
ASTM D4318 - Wet Method				
Liquid Limit	-			
Plastic Limit	-			
ASTM D854 - Assumed				
Specific Gravity	2.650			
After Test	1-B3 @ 42-42.5			
Water Content (%)	24.08			
Saturation (%)	100.00			
Strain Rate (in/min)	0.05			
Peak Deviator Stress (psf)	1234.9			
Axial Strain @ Failure (%)	10.429			
	Cell Pressure			
Cell (psf)	3130.6			
Back (psf)	n/a			
	Principle Stresses at Failure			
σ1 (psf)	4365.4			
σ3 (psf)	3130.6			
Corrected Peak Deviator Stress				

Mohr-Coulomb Parameters with a Non-zero Friction Angle (Ø≠0)			Cohesion at Failure with a Zero Friction Angle (Ø=0)			
Cohesion, c (psf)	0.0		617.4			
Friction Angle Ø	0.00		n/a			

Project Information	
Project Name:	Montague Expressway, Bridge Abutment
Project Number:	12074.000.002
Project Location:	1-B3
Client:	Lennar Homes of California
Description:	See exploration logs
Test Remarks:	

ENGEO Expect Excellence

Isotropic Unconsolidated Undrained Triaxial Test

(ASTM D2850)

Date: 08/29/16

J. Ruffoni

Checked By:

Date: 8/28/2016

K. Lecce

Tested By:

Mohr Circles

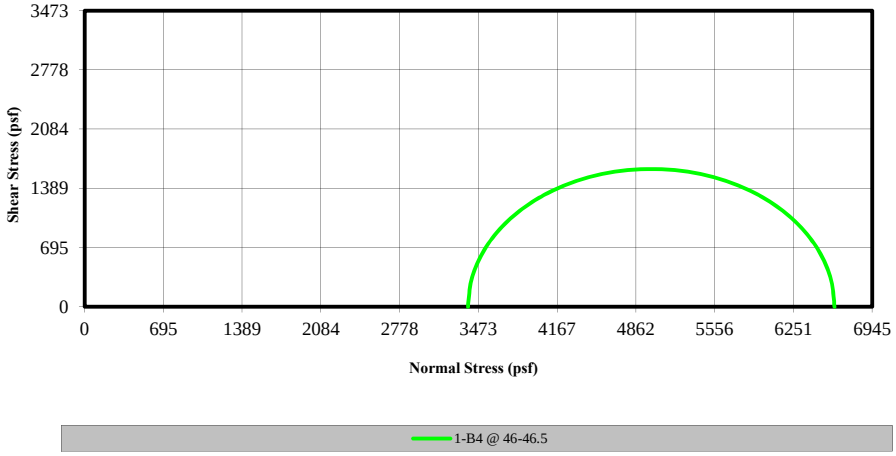

Stress-Strain Curve

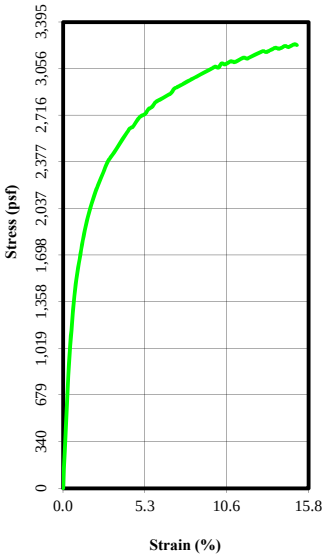

Before Test	Specimen 1-B4 @ 46-46.5			
Water Content (%)	22.01			
Dry Density (pcf)	97.56			
Saturation (%)	83.84			
Void Ratio	0.70			
Diameter (in)	2.407			
Height (in)	5.080			
Height-to-Diameter Ratio	2.111			
ASTM D4318 - Wet Method				
Liquid Limit	-			
Plastic Limit	-			
ASTM D854 - Assumed				
Specific Gravity	2.650			
After Test	1-B4 @ 46-46.5			
Water Content (%)	22.63			
Saturation (%)	86.20			
Strain Rate (in/min)	0.05			
Peak Deviator Stress (psf)	3233.6			
Axial Strain @ Failure (%)	14.943			
	Cell Pressure			
Cell (psf)	3379.7			
Back (psf)	n/a			
	Principle Stresses at Failure			
σ1 (psf)	6613.3			
σ3 (psf)	3379.7			
Corrected Peak Deviator Stress				

Mohr-Coulomb Parameters with a Non-zero Friction Angle (Ø≠0)			Cohesion at Failure with a Zero Friction Angle (Ø=0)			
Cohesion, c (psf)	0.0		1616.8			
Friction Angle Ø	0.00		n/a			

Project Information	
Project Name:	Montague Expressway, Bridge Abutment
Project Number:	12074.000.002
Project Location:	1-B4
Client:	Lennar Homes of California
Description:	See exploration logs
Test Remarks:	

ENGEO
Expect Excellence

APPENDIX C

Corrosivity Test Data
(CERCO Analytical Inc., 2016)

California State Certified Laboratory No. 2153

CERCO analytical
1100 Willow Pass Court, Suite A
Concord, CA 94520-1006
925 462 2771 Fax. 925 462 2775
www.cercoanalytical.com

Client: ENGEO Incorporated
Client's Project No.: 12074.000.002
Client's Project Name: 400 and 450 Montague Expressway, Milpitas
Date Sampled: 08/17 & 18/16
Date Received: 25-Aug-16
Matrix: Soil
Authorization: Signed Chain of Custody

Date of Report: 2-Sep-2016

Job/Sample No.	Sample I.D.	Redox (mV)	pH	Conductivity (umhos/cm)*	Resistivity (100% Saturation) (ohms-cm)	Sulfide (mg/kg)*	Chloride (mg/kg)*	Sulfate (mg/kg)*
1608236-001	1-B2 @ 15'	370	8.50	-	1,400	-	N.D.	56
1608236-002	1-B3 @ 5'	360	8.28	-	860	-	N.D.	71
1608236-003	1-B4 @ 30'	290	8.57	-	3,700	-	25	33

Method:	ASTM D1498	ASTM D4972	ASTM D1125M	ASTM G57	ASTM D4658M	ASTM D4327	ASTM D4327
Reporting Limit:	-	-	10	-	50	15	15
Date Analyzed:	1-Sep-2016	31-Aug-2016	-	31-Aug-2016	-	1-Sep-2016	1-Sep-2016

* Results Reported on "As Received" Basis

N.D. - None Detected

Cheryl McMillen
Laboratory Director

Quality Control Summary - All laboratory quality control parameters were found to be within established limits

1608236

11521

CHAIN OF CUSTODY RECORD

PROJECT NUMBER: 12074.000.002

PROJECT NAME: 400 and 450 Montague Expressway, Milpitas

SAMPLED BY: (PRINT) Seema Barua

PROJECT MANAGER: Jeanine Ruffoni / (925) 551-1696

ROUTING: E-MAIL JRuffoni@engeo.com Hard Copy NA

	SAMPLE NUMBER	DATE	TIME	MATRIX	NUMBER OF CONTAINERS	CONTAINER SIZE	PRESERVATIVE	Redox	pH	Sulfate	Resistivity	Chloride											REMARKS REQUIRED DETECTION LIMITS
001	1-B2@15'	8/17/16	-----	SOIL	1	Bag	NA	X	X	X	X	X											ASTM Test Methods
002	1-B3@5'	8/17/16	-----	SOIL	1	Bag	NA	X	X	X	X	X											ASTM Test Methods
003	1-B4@30'	8/18/16	-----	SOIL	1	Bag	NA	X	X	X	X	X											ASTM Test Methods

RELINQUISHED BY: (SIGNATURE)	DATE/TIME	RECEIVED BY: (SIGNATURE)	RELINQUISHED BY: (SIGNATURE)	DATE/TIME	RECEIVED BY: (SIGNATURE)
Jackie Schuyler	8-25-16 10:40			8/25/16 1340	
RELINQUISHED BY: (SIGNATURE)	DATE/TIME	RECEIVED BY: (SIGNATURE)	RELINQUISHED BY: (SIGNATURE)	DATE/TIME	RECEIVED BY: (SIGNATURE)
RELINQUISHED BY: (SIGNATURE)	DATE/TIME	RECEIVED FOR LABORATORY BY: (SIGNATURE)	DATE/TIME	REMARKS	
				STANDARD T.A.T.	

ENGEO INCORPORATED

6399 SAN IGNACIO AVENUE, SUITE 150
SAN JOSE, CALIFORNIA 95119
(408) 574-4900 FAX (888) 279-2698
WWW.ENGEO.COM

DISTRIBUTION: ORIGINAL ACCOMPANIES SHIPMENT; COPY TO PROJECT FIELD FILES

APPENDIX D
Hydraulic Analysis by Schaaf & Wheeler, dated 2020

870 Market Street, Suite 1278
San Francisco, CA 94102-2906
t. 415-433-4848
f. 415-433-1029
s&w@swsv.com

Schaaf & Wheeler
CONSULTING CIVIL ENGINEERS

MEMORANDUM

TO:	Tyler Wood, LMC	DATE:	September 4, 2020
FROM:	Katie Hogan, PE, CFM Caitlin Gilmore, PE, QSD Emily Straley, PE	JOB#:	LENN.04.20
SUBJECT:	East Penitencia Creek Bridge Crossing Hydraulic Analysis		

The development at 730 and 750 East Capitol in Milpitas, California is under construction based on approved design plans dated October 12, 2016 on the north side of East Penitencia Creek east of Montague Expressway, as shown in Figure 1. A proposed vehicular bridge crossing to connect the north and south sides of the creek is currently under design. Downstream of the project site, a pedestrian bridge is to be constructed as part of the Centre Pointe development. Schaaf & Wheeler conducted a hydraulic analysis to compare the existing and proposed 100-year water surface elevations along East Penitencia Creek due to the construction of the new vehicular bridge. An investigation into the potential for future flood control projects was also conducted to verify the proposed bridge design does not need to be modified to accommodate for those future projects. This memorandum documents the methodology and results of the hydraulic analysis.

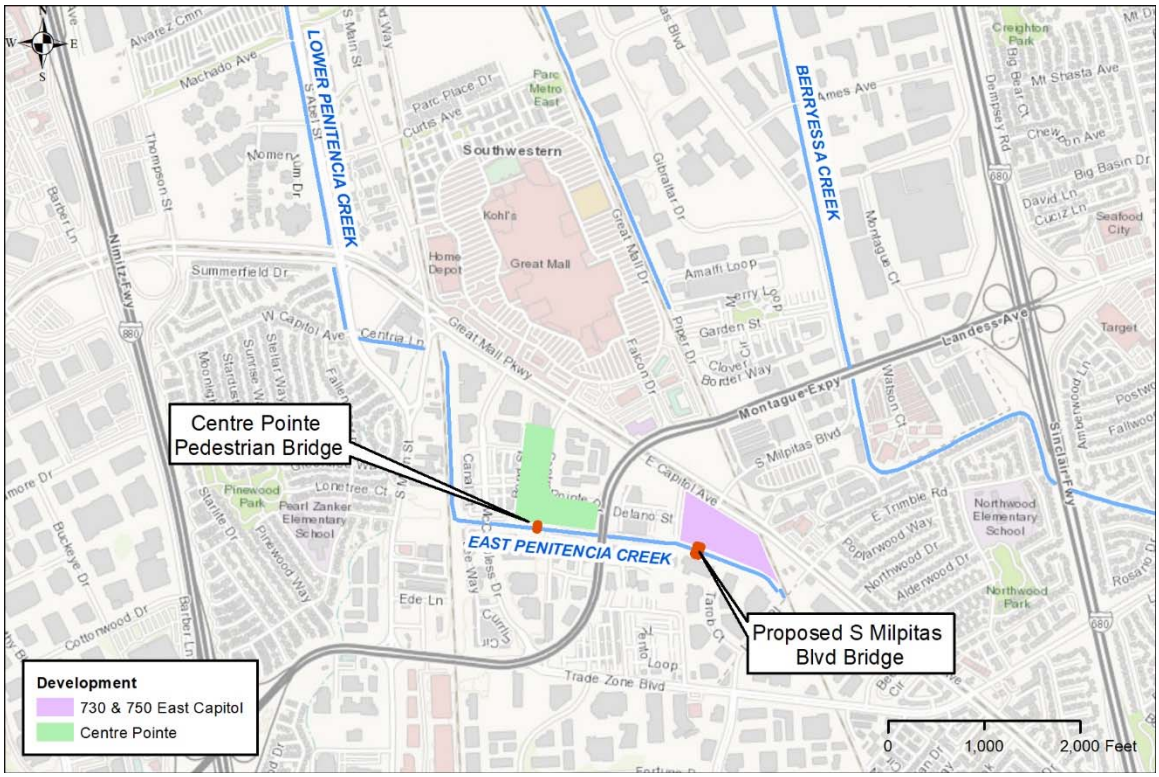

Figure 1 – Location Map

FEMA Effective

The FEMA effective Federal Insurance Rate Map (FIRM) along East Penitencia Creek shows flooding outside of the channel banks, some of which results from overland flow from a spill on Upper Penitencia Creek in San Jose. East Penitencia Creek is mapped as Special Flood Hazard Area (SFHA) Zone AO (1 foot) along the overbanks and Zone A in the channel, as shown in Figure 2. The project is located on FEMA FIRM panel 06085C0067J, effective February 19, 2014. The effective flood profiles in the Flood Insurance Study (FIS) indicate a water surface elevation of approximately 45.5 feet (NAVD 88) at the proposed S Milpitas Boulevard bridge location. A more recent (2018) hydrologic and hydraulic study using Infoworks ICM software, however, was developed along East Penitencia creek since the effective map was created.

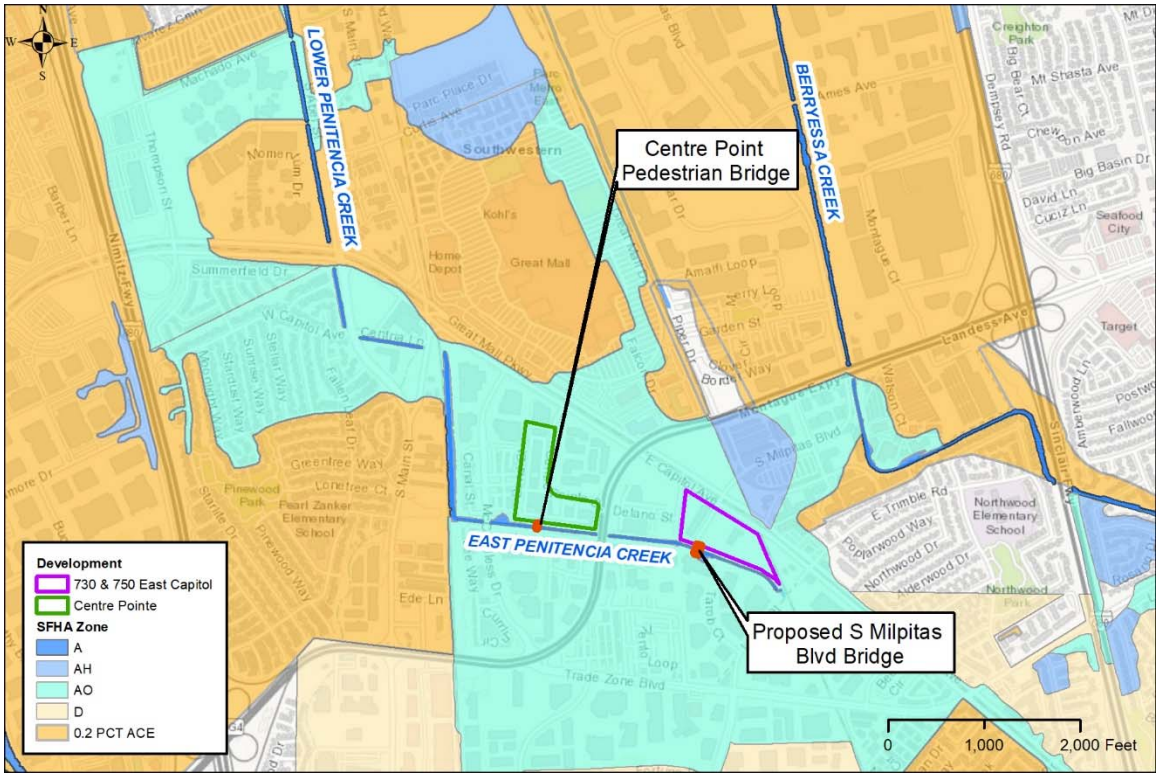

Figure 2 – Effective SFHA Map

Previous Study

Schaaf & Wheeler (S&W) developed an Infoworks ICM model for the Santa Clara Valley Water District (SCVWD) and FEMA CTP remapping project submitted in 2018 to the City of Milpitas. The City of Milpitas, City of San Jose, and SCVWD have all reviewed the model, and it is currently under review with FEMA. The proposed FEMA FIRM map is shown in Figure 3 remaps the subject areas as Zone AE with base flood elevations (BFEs). The Zone X areas indicate where the 100-year flood depth was determined to be less than one foot. This model is considered to have the most recent hydrologic data and was used to develop the HEC-RAS steady state model for this study. The results from this 2018 study may be subject to change because the study has not yet been officially adopted by FEMA.

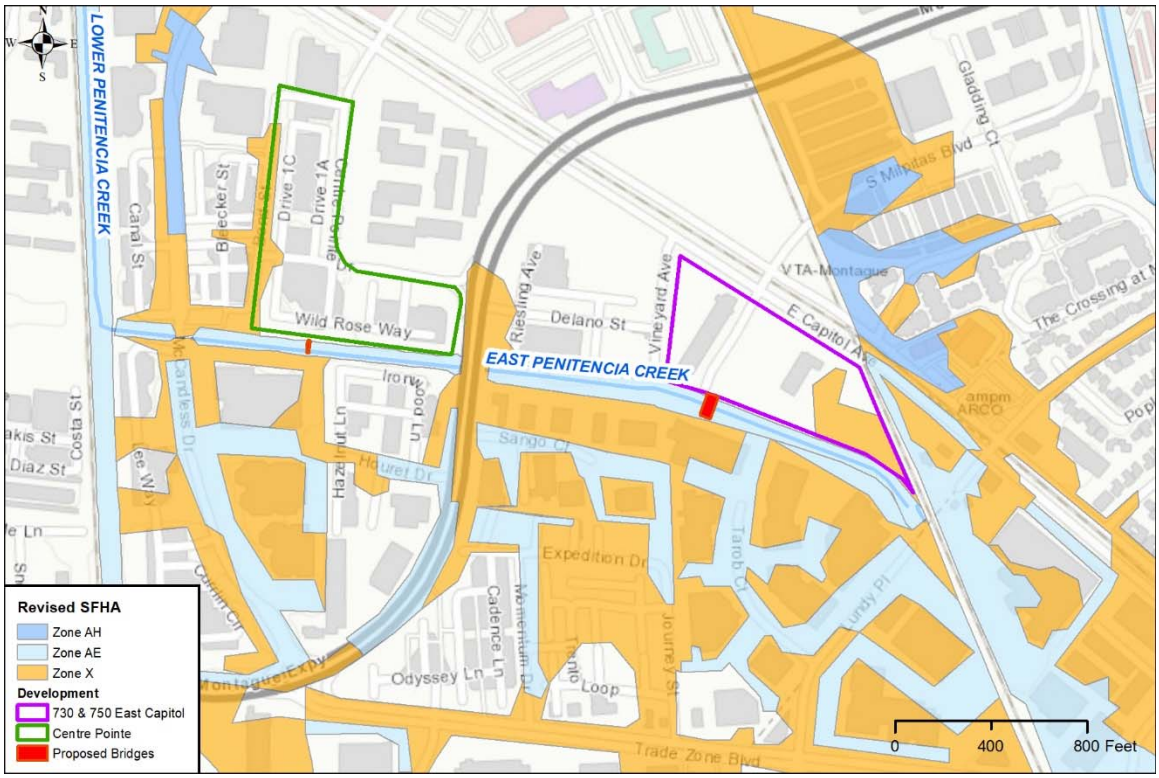

Figure 3 – Revised SFHA (2018 ICM Model Results)

Existing Hydraulic Analysis

A steady state HEC-RAS version 5.0.7 model was created along East Penitencia Creek to calculate water surface elevations for existing and proposed bridge conditions. Cross sections were placed along the entire East Penitencia Creek reach from the confluence with Lower Penitencia Creek to the beginning of the open channel at the railroad. Cross sections were spaced an average of 100 LF apart and at critical locations, such as bridge crossings and grade control structures. Figure 4 shows the cross section and structure locations.

Geometry Data

Cross section and bridge geometry were developed using various sources, including SCVWD 2017 survey, 2012 and 2015 surveys for the 730 and 750 East Capitol project, 2013 BART/VTA design survey, and 2006 Santa Clara County LiDAR data used for the ICM model terrain surface. Table 1 lists each data source, its reference datum, and the conversion to NAVD 88 as needed. Table 2 lists the cross sections and their topographic sources. All elevations listed in this memorandum reference the NAVD 88 vertical datum, and the hydraulic models were created referencing NAVD 88 vertical datum.

Figure 4 – Cross Section Location Map

Table 1 - Topography Sources

Source	Date	Datum	Conversion to NAVD 88
SCVWD Survey East Penitencia Creek	2017	NAVD 88	NA
730 and 750 East Capitol Survey	2012	NGVD 29	+2.743
730 and 750 East Capitol Survey	2015	NGVD 29	+2.743
BART/VTA Survey	2013	NAVD 88	NA
Santa Clara County LiDAR/ICM Terrain	2006	NAVD 88	NA

Table 2 - Topography Source by Cross Section

River Stations	Channel Source	Overbank Source
3127 – 2822	2015 Survey	2017 SCVWD
2822 - 2283	2012 & 2015 E Capitol Survey	2012 & 2015 E Capitol Survey
2243 – 1625	2017 SCVWD & ICM Model Sections	2006 LiDAR
1446	2012 E Capitol Survey	2006 LiDAR
1392	Interpolated Section using ICM Model Sections	2006 LiDAR
1070	ICM Model Sections	2006 LiDAR

River Stations	Channel Source	Overbank Source
941	2013 VTA/BART Survey	2006 LiDAR
903-132	2017 SCVWD Survey & ICM Model Sections	2006 LiDAR
Montague & McCandless Roads	2013 VTA/BART Survey & ICM Model	

A profile comparison of the ICM flowline and the profile for this hydraulic analysis (2020 Channel Flowline) is provided in Figure 5. The profiles generally match downstream of the existing grade control structure. However, the ICM model shows the flowline of the channel approximately 4.5 feet lower than the effective FIS profile and 2015 survey near the proposed South Milpitas Boulevard bridge. Further investigation indicated that an existing grade control structure may have not been fully accounted for in the 2017 SCVWD survey and thereby the ICM profile. A site visit conducted on July 24, 2020 confirmed a two-foot concrete drop structure with an approximately 5-foot rock rip rap structure directly upstream, as shown in Figure 6. This grade control structure was captured in the 2015 survey for the 730 and 750 East Capitol development and was included in the hydraulic model for this study.

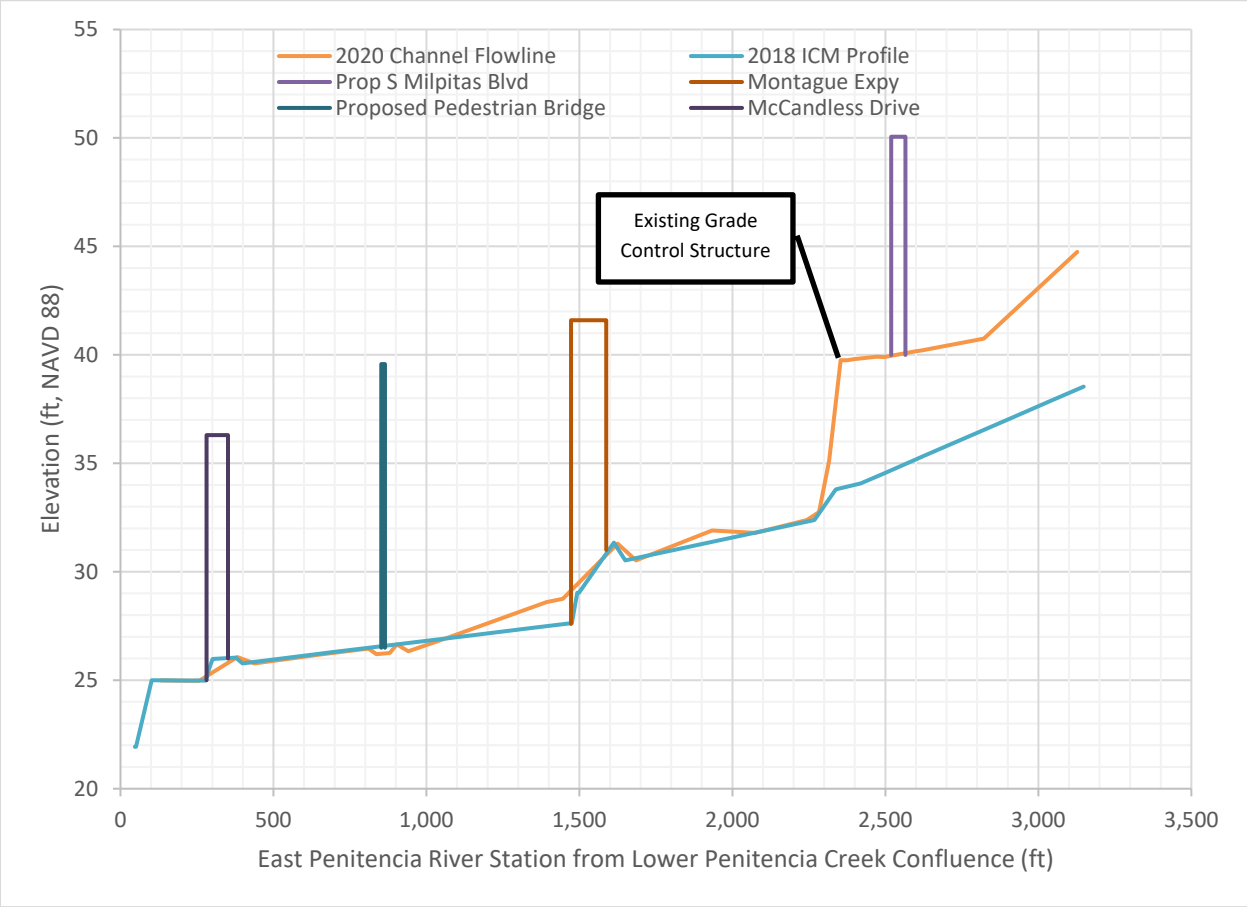

Figure 5 – ICM Channel Profile versus S&W 2020 Model Profile

Figure 6 - Existing Grade Control Structure Looking Upstream (East) on East Penitencia Creek

Hydraulic Parameters

Manning's roughness values (n-values) were assigned based on the ICM model's 1D roughness factors. The channel was assigned a roughness value of 0.035 and the overbanks 0.10 with blocked obstructions for existing buildings. Contraction and expansion coefficients were set to 0.1 and 0.3, respectively, except upstream and downstream of structures where they were revised to 0.3 for contraction and 0.5 for expansion. Ineffective areas were added at cross sections upstream and downstream of structures at a 1:1 ratio upstream of crossings and 4:1 ratio downstream.

Steady Flow Data

The steady flow data was obtained from the 2018 ICM model along the river reaches of East Penitencia Creek. Numerous scenarios involving levee breaches throughout the watershed were investigated as part of the 2018 study. Comparisons to the breach failure scenarios from the Upper Penitencia Creek and Berryessa Creek levee breaches show that the highest peak flowrates along East Penitencia Creek occur during the "All Levees Hold", or no levee breaches, scenario. This scenario was therefore used to obtain the peak flow rates in the HEC-RAS steady state analysis. Table 3 summarizes the flow change locations and corresponding 100-year flow rates. Flow change locations generally correspond to storm drain inflows and overflows from Upper Penitencia Creek.

Table 3 – Flow Change Locations "All Levees Hold" Scenario

Location	River Station	100-year Q (cfs)
460 LF Downstream Lundy Drive	3127	625
Upstream Montague Expy	1685	665
Downstream Montague Expy	1446	710
580 LF Downstream Montague Expy	903	735
Upstream McCandless Drive	438	760
Upstream Lower Penitencia Confluence	223	777

The peak flowrates on East Penitencia Creek are controlled by the overflow from Upper Penitencia Creek. Figure 7 shows the hydrograph just upstream of the proposed bridge location. There are two peaks. The first peak occurs at approximately hour 12 from the local drainage system, and the second peak (approximately hour 16) occurs due to overflows from Upper Penitencia Creek. The second peak, or the overflow from Upper Penitencia Creek, results in the maximum peak discharges on East Penitencia Creek.

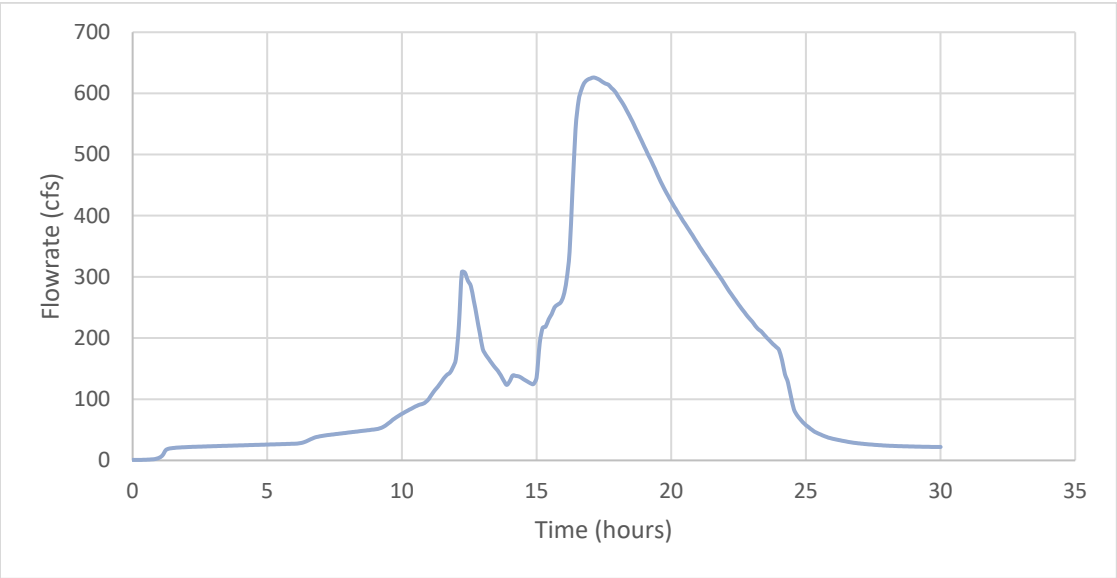

Figure 7 – East Penitencia Creek 100-year Hydrograph Upstream Proposed South Milpitas Blvd Bridge

Boundary Conditions

The 100-year boundary condition at the confluence of East Penitencia with Lower Penitencia Creek was input as a known water surface elevation of 32.4 feet (NAVD 88) from the 2018 ICM model.

Proposed Conditions

The proposed model was created by modifying the existing conditions model to add the proposed pedestrian bridge and the South Milpitas Boulevard vehicular bridge at the locations indicated in Figure 4 above. The pedestrian bridge was input according to RJA January 2019 plans for Centre Pointe included in the attachments to this memorandum. The bridge spans the channel and does not impede flow. Therefore, ineffective areas and expansion and contraction coefficients were not modified from existing conditions.

The South Milpitas Boulevard bridge was modeled according to the structural plans dated April 2020 completed by Cornerstone Structural Engineering Group included as an attachment to this memorandum.

The proposed vehicular bridge spans the channel, and the low chord is elevated above the existing conditions water surface elevation. However, the presence of flow in the overbanks under existing and proposed conditions warrants modifications to the ineffective areas and expansion and contraction coefficients to represent the abutment obstructions under proposed conditions. Ineffective areas were adjusted based on a 1:1 ratio upstream of the bridge opening and 4:1 downstream. Contraction and expansion coefficients upstream and downstream of the bridge were modified to 0.3 and 0.5, respectively.

The right bank of the creek was also was revised based on fill and grading from the 730 and 750 East Capitol grading plans dated October 12, 2060 by Carlson, Barbee & Gibson, Inc.

Scour

Bridge scour is the erosion or removal of streambed or bank material from bridge foundations caused by flowing water and is usually considered to have a long-term degradation effect (Mays, 2005). The proposed South Milpitas Boulevard vehicular bridge was evaluated for scour based on the Federal Highway Administration (FHWA) Hydraulic Engineering Circular, HEC-18 (April 2012). Two types of scour conditions were considered: contraction scour, and local scour at the abutments.

Contraction scour, which occurs when there is an increase in flow velocity through a bridge cross section that is narrower than the upstream channel, is the most common type of general scour based on HEC-18. This type of scour is temporal in nature; there can be an increase and decrease in streambed elevation during the passing of a flood. Contraction scour is minimal for the proposed South Milpitas Boulevard bridge due to the slight encroachment of the left abutment (looking downstream) not causing a change in water surface elevation or velocity. The estimated contraction scour based on the 100-year flood profile is 0.6 ft.

Local scour can be identified by the formation of horseshow vortices at the base of piers or abutments. When there is an increase in head water on the upstream side of the obstruction, followed by an acceleration of the flow around the nose of the pier or abutment, a horseshoe vortex can form. This type of vortex causes bed material from around the base of the obstruction to be removed. When the loose sediment is transported away from the base region faster than it is replaced, a scour hole develops.

The FHWA scour equations are based on laboratory data for an ideal condition and are to be considered conservative. The equations are based on non-cohesive soils, which is the worst-case condition as soils information was minimal when the analysis was completed, and indefinitely long sustained flow conditions to develop the potential scour holes.

Although the abutments do not project into the channel, abutment scour due to floodplain flow is expected to occur at Abutment 1 (left abutment looking downstream). Abutment 2 does not project into the channel or the floodplain. Abutment scour was calculated based on the 100-year flood profile. The estimated abutment scour at Abutment 1 is 0.7 ft. The total scour depth is the abutment scour plus contraction scour which equals 1.3 ft.

It is recommended that scour countermeasure be incorporated into the bridge design through extending the top of the Abutment 1 footing to a minimum depth of 1 foot below the calculated total scour depth of 1.3 ft, or by some other structural measure that accounts for scour. The velocities through the bridge section are below the suggested maximum permissible velocity of 6 feet per second for a natural grass

lined or gravel channel per USACE *Hydraulic Design of Flood Control Channels* (1994) so armoring is not required.

East Penitencia Creek is not expected to be subjected to long-term channel degradation or aggradation in the existing condition. Grade control structures are present both upstream and downstream of the proposed bridge location which limits degradation. There is a 5 ft concrete drop structure located approximately 180 ft downstream of the bridge location. The top elevation of the drop structure is 39 ft and the bottom elevation is 34 feet. It is protected from scour by rock riprap but some erosion is occurring. The top of East Penitencia Creek is a siphon located approximately 1,400 ft upstream of the bridge location. The approximate elevation of the siphon outlet is 46 feet.

Degradation could occur at the bridge location should the drop structure fail. The channel invert may change to form an equalized slope between the bottom of the drop structure and siphon outlet elevations. This may result in a channel invert elevation of approximately 36 feet at the bridge location assuming 4 feet of degradation. However, this is a very approximately estimate of change since it is impossible to predict how the channel will stabilize should the drop structure fail and not be repaired.

The Caltrans Scour Summary Table and Scour Data Table per Memo to Designers 16-1 are provided in Tables 4 and 5. The summary tables assume that the downstream control structure remains in place per CalTrans documentation to consider the as-built conditions.

Table 4 - Scour Summary Table - Caltrans

Long Term & Short Term Scour Depths for South Milpitas Boulevard Bridge of E Penitencia Creek			
Support No.	Degradation Scour Depth (ft)	Contraction Scour Depth (ft)	Short Term (Local) Scour Depth (ft)
Abutment 1	0	0.6	0.7
Abutment 2	0	0.6	NA

Table 5 - Scour Data Table - Caltrans

Support No.	Long Term (Degradation and Contraction) Scour Elevation (ft) (NGVD)*	Long Term (Degradation and Contraction) Scour Elevation (ft) (NAVD)*	Short Term (Local) Scour Depth (ft)
Abutment 1	36.8	39.5	0.7
Abutment 2	36.8	39.5	NA

** Scour elevation is channel invert minus long term scour depth of 0.6 ft.*

Future Conditions

The SCVWD requested an investigation of the potential for future flood control projects along East Penitencia Creek that may impact the proposed vehicular bridge design at South Milpitas Boulevard. A review of the 2018 ICM model "All Levees Hold" scenario shows that Upper Penitencia Creek overflows into East Penitencia Creek near the proposed South Milpitas Boulevard bridge crossing. Figure 8 shows the general 100-year "All Levees Hold" flow path per the ICM model results. The 100-year storm overtops Upper Penitencia Creek near Victory Way and continues northwest where it eventually overtops the railroad. Runoff then continues north towards East Penitencia Creek. One overflow path to East Penitencia is through the area upstream of the proposed Milpitas Boulevard bridge, as shown on Figure 9. A floodwall along the south (left) bank of East Penitencia Creek would block the overflow and cause inundation to potentially increase inundation at the properties and structures behind the future wall. A continued overflow path to East Penitencia Creek is recommended from Upper Penitencia Creek unless Upper Penitencia Creek is contained by a future flood control project.

If a future Upper Penitencia Creek project prevents overflow to East Penitencia Creek, the peak discharges on East Penitencia Creek would be limited to the first peak around hour 12 in Figure 7. These "No Overflow" peak discharges on East Penitencia Creek are lower than the "All Levees Hold" scenario peak discharges. An existing and proposed conditions steady flow plan using only the first peak, or inflows from the East Penitencia Creek watershed, was created in the hydraulic model. Peak discharges are generally limited to the upstream pipe capacities. Table 6 lists the "No Overflow" scenario peak discharges and their flow change locations. The flow changes generally correspond with storm drain inflows.

Table 6 – Flow Change Locations "No Overflow" Scenario

Location	River Station	100-year Q (cfs)
460 LF Downstream Lundy Drive	3127	284
Near Vineyard Avenue	2398	310
Downstream Montague Expy	1446	345
Upstream McCandless Drive	658	355

The existing conditions "No Overflow" geometry matches the existing conditions "All Levees Hold" geometry. The 100-year is not contained in the channel on the left bank in this scenario. The proposed conditions was copied from the "All Levees Fail" proposed scenario and modified to include a floodwall along the left bank of East Penitencia Creek to contain the 100-year "No Overflow" discharges and represent the future conditions model.

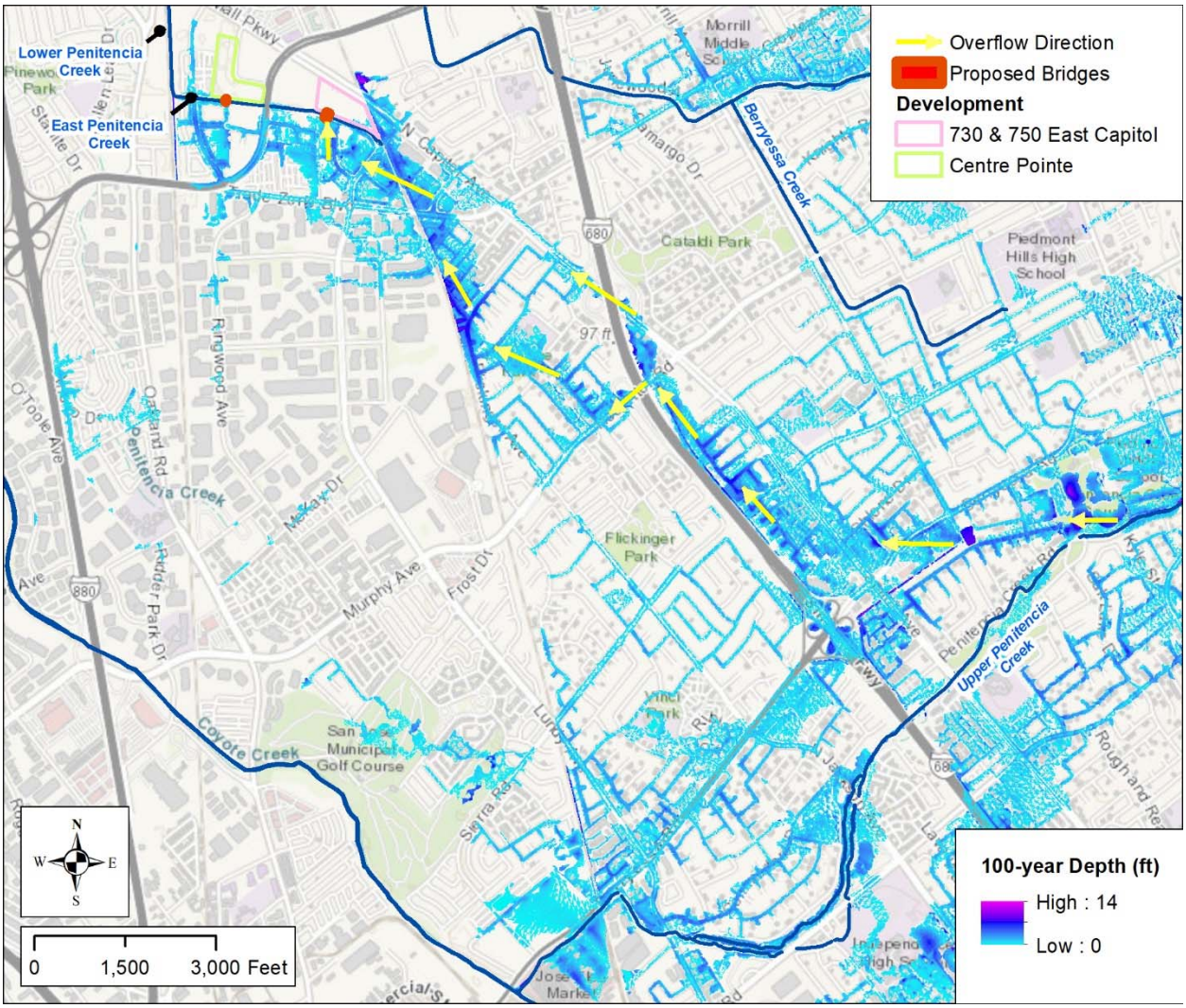

Figure 8 – 100-year All Levees Hold Inundation Depths and Overflow Path

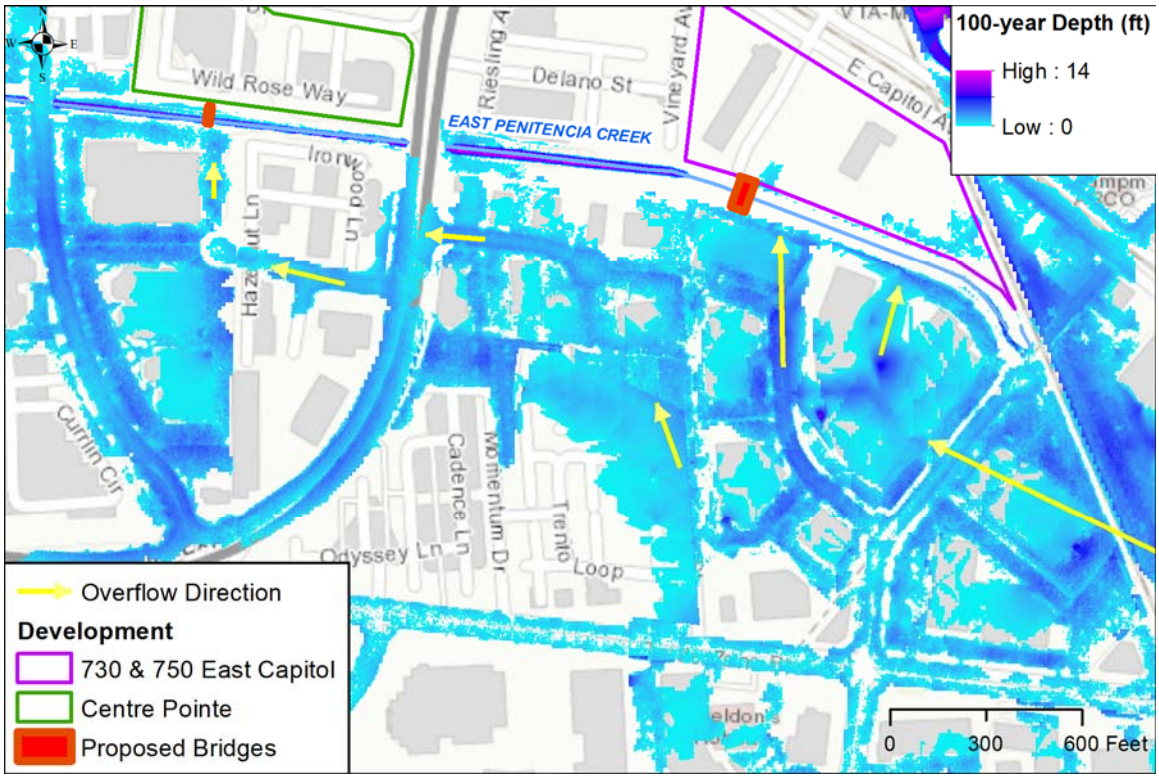

Figure 9 – 100-year All Levees Hold Inundation Depths and Overflow Path at East Penitencia Creek

Hydraulic Results

The results of the hydraulic analysis are summarized in Table 7. The "All Levees Hold" proposed conditions show 0.01 foot increase upstream of the proposed pedestrian bridge and 0.34 foot increase upstream of the proposed South Milpitas Boulevard bridge. The pedestrian bridge does not cause a significant increase in water surface elevation. The proposed South Milpitas Boulevard bridge spans the channel and the low chord is approximately 2.29 feet above the 100-year "All Levees Hold" proposed water surface elevation. The increase in water surface elevations is likely because the left overbank is used for conveyance as the 100-year storm is not contained in channel. The proposed abutments create obstructions in the overbank.

The future conditions "No Overflow" model shows no increase in water surfaces upstream of the pedestrian bridge and shows 0.38 foot increase in water surface elevation upstream of the proposed South Milpitas Boulevard. This increase is due to both the bridge abutments and the possible future floodwall along the left bank of East Penitencia Creek. This scenario would likely only occur if a future project were completed along Upper Penitencia Creek to prevent overflows to East Penitencia Creek. Table 8 includes the hydraulic summary table per the CalTrans Memo to Designers 16-1.

Table 7 - 100-year Water Surface Elevation Comparison

	"All Levees Hold"			Future Conditions "No Overflow"		
River Station	Existing WSE (ft, NAVD 88)	Proposed WSE (ft, NAVD 88)	Difference (ft)	Existing WSE (ft, NAVD 88)	Proposed WSE (ft, NAVD 88)	Difference (ft)
3127	48.72	48.82	0.10	47.05	47.05	0.00
2822	46.26	46.05	-0.21	45.47	45.84	0.37
2618	45.43	45.74	0.31	45.08	45.43	0.35
2596	45.39	45.73	0.34	45.02	45.40	0.38
2542	Proposed South Milpitas Boulevard					
2497	44.98	45.03	0.05	44.95	45.14	0.19
2471	45.00	45.01	0.01	44.95	45.09	0.14
2398	44.92	44.92	0.00	43.76	43.76	0.00
2375	44.79	44.79	0.00	43.76	43.76	0.00
2354	44.75	44.75	0.00	43.33	43.33	0.00
2316	40.15	40.15	0.00	38.28	38.26	-0.02
2283	40.45	40.45	0.00	37.67	37.67	0.00
2243	40.39	40.39	0.00	37.55	37.55	0.00
2075	40.14	40.14	0.00	37.02	37.02	0.00
1934	40.02	40.02	0.00	36.71	36.71	0.00
1685	39.83	39.83	0.00	36.38	36.38	0.00
1625	39.73	39.73	0.00	36.19	36.19	0.00
1530	Montague Expressway					
1446	37.85	37.85	0.00	35.02	35.02	0.00
1392	35.94	35.94	0.00	33.79	33.79	0.00
1070	35.85	35.85	0.00	33.62	33.62	0.00
941	35.42	35.42	0.00	33.31	33.31	0.00
903	35.47	35.47	0.00	33.35	33.35	0.00
880	35.46	35.47	0.01	33.35	33.35	0.00
858	Proposed Pedestrian Bridge					
836	35.42	35.42	0.00	33.31	33.31	0.00
811	35.35	35.35	0.00	33.26	33.26	0.00
658	35.15	35.15	0.00	33.11	33.11	0.00
438	34.79	34.79	0.00	32.92	32.92	0.00
382	34.77	34.77	0.00	32.91	32.91	0.00
316	McCandless Drive					
258	32.98	32.98	0.00	32.50	32.50	0.00
223	32.89	32.89	0.00	32.48	32.48	0.00
132	32.40	32.40	0.00	32.40	32.40	0.00

Table 8 - Hydrologic Summary Table - Caltrans

Hydrologic Summary for South Milpitas Boulevard Bridge of E Penitencia Creek			
	Drainage Area: 1.7 square miles		
Frequency	Design Flood (100-year)	Base Flood (100-year)	Flood of Record (N/A)
Discharge	625 cfs	625 cfs	NA
Water Surface Elevation at Bridge	45.73	45.73	NA

Conclusions

The proposed bridge structures do not cause an impact over 1 foot cumulatively through East Penitencia Creek. The proposed pedestrian bridge has a slight (0.01 foot) increase, and the proposed South Milpitas Boulevard Bridge has a 0.34 foot increase. The increase in water surface elevation up and downstream of the proposed South Milpitas Bridge is due to the abutments creating an obstruction in the conveyance areas and contraction and expansion in the overbanks. The proposed bridge deck is 2.29 feet above the 100-year water surface elevation and spans the main channel; therefore, the increase is not due to the height of the bridge deck but rather overbank obstruction and hydraulic losses due to expansion and contraction.

Contraction scour and abutment scour are expected to occur at the South Milpitas Bridge. Contraction scour is 0.6 ft and abutment 1 scour is 0.7 feet for a total scour depth of 1.3 feet for the 100 year flood. Scour at abutment 2 is not expected to occur. Countermeasures are recommended to incorporate the scour potential into the Abutment 1 design by extending the top of the Abutment 1 footing to a minimum depth of 1 foot below the calculated total scour depth of 1.3 feet. Additionally, the downstream drop structure is currently providing scour protection. Bridge designers may want to account for the additional scour that may occur if the drop structure were removed without repair, or seek assurance from Valley Water that the drop structure will be maintained.

The investigated future condition scenario includes assumes proposed bridge conditions with no overflow from Upper Penitencia Creek and a floodwall assumed to be constructed along the left bank of East Penitencia Creek to contain the local 100-year flowrates. Increases in water surface elevation compared to existing conditions are a result of both the proposed South Milpitas Boulevard bridge abutments and the potential future floodwall. This future proposed scenario results in a 100-year water surface elevation of 45.40 feet (NAVD 88). The proposed bridge deck elevation is 50.1 feet (NAVD 88) and provides approximately 4.7 feet of freeboard to the top of the bridge. The proposed bridge deck is at least 4 feet above the 100-year water surface elevation and meets FEMA levee accreditation freeboard requirements for this future scenario.

Attachments

1. Centre Pointe – Penitencia Creek Pedestrian Bridge Across East Penitencia Creek Between McCandless Drive and Montague Expressway Plans, RJA, November 8, 2019
2. S. Milpitas Boulevard Bridge over Penitencia East hannel, Conerstone Structural Engineering Group, April 1, 2020.

PACKAGE B - IMPROVEMENT PLANS FOR
CENTRE POINTE - PENITENCIA CREEK PEDESTRIAN BRIDGE
CITY OF MILPITAS PROJECT NO. 2005
ACROSS EAST PENITENCIA CREEK BETWEEN McCANDLESS DRIVE AND MONTAGUE EXPRESSWAY
MILPITAS, CALIFORNIA

BENCHMARK

SOUTHERLY DISK IN MONUMENT WELL AT THE INTERSECTION OF ABEL STREET AND CORNING AVENUE,
ELEVATION = 17.124' NGVD29 (19.864' NAVD88) +2.74 to NAVD 88
ALL ELEVATIONS SHOWN ON THESE PLANS ARE BASED ON NGVD29.

FEMA FLOOD ZONE:

"ZONE AO" – AVERAGE FLOOD DEPTHS OF 1 FOOT. MAP NO. 06085C0067H, DATE FEBRUARY 19, 2014.

STANDARDS:

TO BE SUPPLEMENTED BY CALTRANS STANDARD PLANS DATED MAY 2015 AND CALTRANS STANDARD SPECIFICATIONS DATED APRIL 20, 2018 AND CITY OF MILPITAS STANDARDS.

LEGEND

PROPOSED	DESCRIPTION	EXISTING
	PROJECT BOUNDARY	
	LOT LINE	
	CENTERLINE	
	CURB & GUTTER	
	CONCRETE SIDEWALK	
	EDGE OF PAVEMENT	
	EDGE OF TRAIL	
	GAS	GAS
	STORM DRAIN	
	MANHOLE	
	AREA DRAIN	
X	FENCE	X
1+00.00	ELECTROLIER / STATION	
	WALL	
348	CONTOUR	350
	OVERLAND RELEASE	
×350.7	SPOT ELEVATION	×349.2
0.5% OR	SLOPE & DIRECTION	
OR	DIRECTION OF SURFACE FLOW	
	ACCESSIBLE ROUTE	
	CONCRETE	
	DECOMPOSED GRANITE	
X	EXISTING TREE TO BE REMOVED (BY OTHERS)	

ABBREVIATIONS

AB	AGGREGATE BASE	(N)	NORTH
ADA	AMERICANS WITH DISABILITIES ACT	(NE)	NORTHEAST
APPROX	APPROXIMATELY	NO.	NUMBER
BC	BEGIN CURVE	N.T.S.	NOT TO SCALE
BVC	BEGIN VERTICAL CURVE	O.C.	ON CENTER
CL	CENTERLINE or CLASS	O.D.	OUTSIDE DIAMETER
CONC	CONCRETE	PCC	PORTLAND CEMENT CONCRETE
DG	DECOMPOSED GRANITE	PED	PEDESTRIAN
DIA	DIAMETER	PL or ℄	PROPERTY LINE
DWG	DRAWING	PSI	PER SQUARE INCH
(E)	EAST	PT	POINT
EC	END CURVE	PVC	POLYVINYL CHLORIDE PIPE
EG	EXISTING GROUND	PVI	POINT OF VERTICAL INTERSECTION
ELEV	ELEVATION	R	RIGHT or RADIUS
EP	EDGE OF PAVEMENT	R/W	RIGHT OF WAY
ET	EDGE OF TRAIL	RET	RETAINING
EVC	END OF VERTICAL CURVE	REL	RELATIVE
EX	EXISTING	S	SLOPE
FG	FINISH GRADE	(S)	SOUTH
FGH	FINISH GRADE HIGH	(SE)	SOUTHEAST
FGI	FLAT GRATE INLET	SSMH	SANITARY SEWER MANHOLE
FGL	FINISH GRADE LOW	(SW)	SOUTHWEST
FI	FIELD INLET	SCVWD	SANTA CLARA VALLEY WATER DISTRICT
FL	FLOW LINE	SD	STORM DRAIN
GB	GRADE BREAK	SDMH	STORM DRAIN MANHOLE
GND	GROUND	STD	STANDARD
GR	GRATE	SWK	SIDEWALK
H or HOR.	HORIZONTAL	SS	SANITARY SEWER
HP	HIGH POINT	STA	STATION
HR	HOUR	TW	TOP OF WALL
HSS	HOLLOW STRUCTURAL SECTION	TYP	TYPICAL
IMP	IMPROVEMENTS	VC	VERTICAL CURVE
INV	INVERT	V or VERT.	VERTICAL
L	LEFT	(W)	WEST
LF	LINEAR FEET		
LP	LOW POINT		
MAX	MAXIMUM		
MIN	MINIMUM		

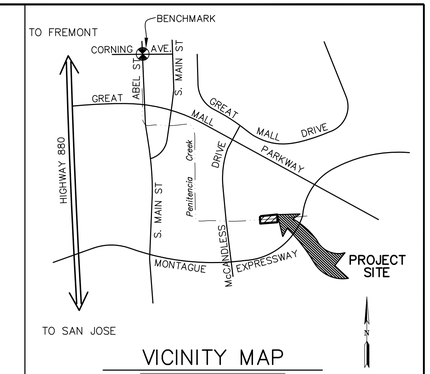

VICINITY MAP
NO SCALE

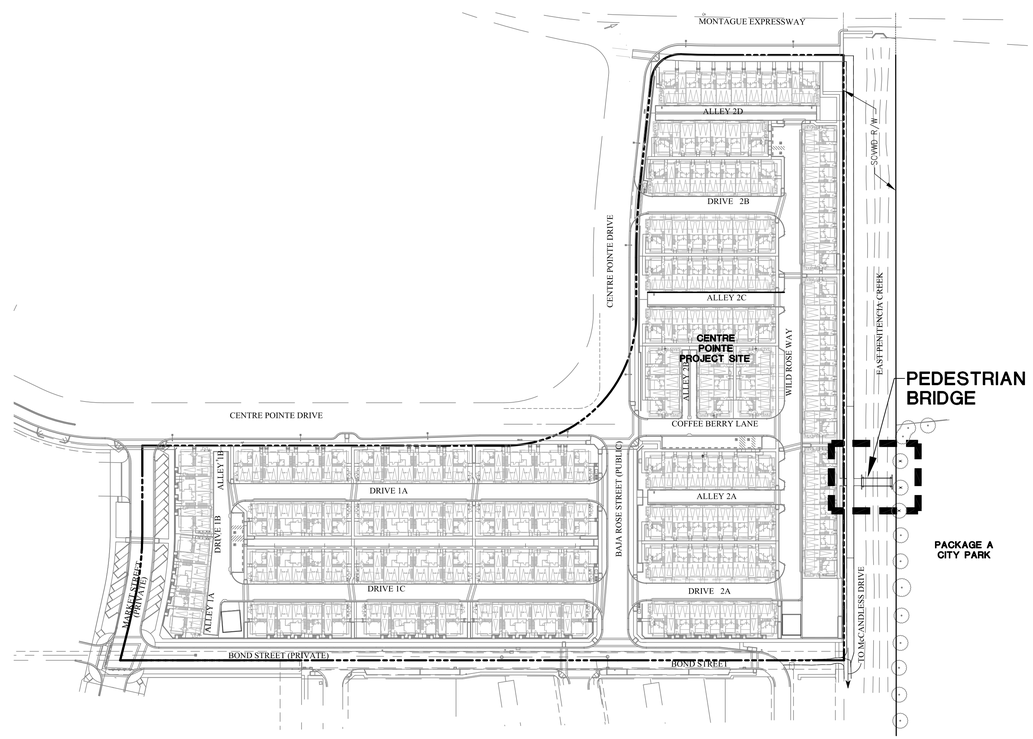

LOCATION MAP
SCALE: N.T.S.

CIVIL SHEET INDEX

PAGE NO.	SHEET NO.	SHEET TITLE
1	1	TITLE SHEET
2	2	NOTES
3	3	MULTI–USE TRAIL 2+43 TO 4+55
4	4	MULTI–USE TRAIL SECTIONS
5	5	RETAINING WALL AND SOUTH TRAIL
6	6	BRIDGE PLAN AND SOUTH TRAIL
7	7	WATER POLLUTION CONTROL AND EROSION CONTROL PLAN
8	8	BEST MANAGEMENT PRACTICES

STRUCTURAL SHEET INDEX

PAGE NO.	SHEET NO.	SHEET TITLE
9	S1	GENERAL PLAN
10	S2	ABUTMENT DETAILS NO. 1
11	S3	ABUTMENT DETAILS NO. 2
12	S4	RW–1 RETAINING WALL – PLAN & ELEVATION
13	S5	RW–2 RETAINING WALL – PLAN & ELEVATION
14	S6	RETAINING WALL DETAILS
15	S7	RAILING DETAILS
16	S8	STRUCTURAL AND GEOTECHNICAL SPECIAL INSPECTION AND TESTING

UNDERGROUND SERVICE ALERT 1(800) 227–2600 CALL BEFORE YOU DIG

CIVIL ENGINEER: I hereby declare that I am the engineer of work for this project, that I have exercised responsible charge over the design of the project as defined in section 6703 of the business and professions codes, and that the design is consistent with current standards. The design shown hereon is necessary and reasonable and does not restrict any historic drainage flows from adjacent properties nor increase drainage to adjacent properties. The design includes principles and techniques to reduce quantity and improve the quality of storm water runoff, as required by NPDES. I understand that the check of project drawings and specifications by the City of Milpitas is confined to a review only and does not relieve me, as engineer of work, of my responsibilities for project design.

SIGNATURE DATE P.E.
Firm: RUGGERI–JENSEN–AZAR
Address: 8055 CAMINO ARROYO, GILROY, CA 95020
Telephone: (408) 848–0300

ALL ELEVATIONS SHOWN ON THESE PLANS ARE BASED ON NGVD29

LOCATION OF UTILITIES

LOCATION OF UTILITIES SHOWN IS ONLY APPROXIMATE. DETERMINATION OF THE ACTUAL LOCATION IS THE RESPONSIBILITY OF THE CONTRACTOR.

BIGGS CARDOSA ASSOCIATES INC
STRUCTURAL ENGINEERS
865 The Alameda
San Jose, California 95126
408–296–5515
BCA

RJA
RUGGERI-JENSEN-AZAR
ENGINEERS ▪ PLANNERS ▪ SURVEYORS
8055 CAMINO ARROYO GILROY, CA 95020
PHONE: (408) 848–0300 FAX: (408) 848–0302

Designer Stamp: LICENSED PROFESSIONAL ENGINEER LUIS SANTIAGO–SOTELO C79665 EXP. CIVIL STATE OF CALIFORNIA

Record Drawings
Designer: _____ Date: _____
Public Works Inspector: _____ Date: _____
Utility/Facility Dept. Head: _____ Date: _____
Project Engineer: _____ Date: _____
Public Improvements Initially Accepted by the City Council on: _____ Res. No. _____

Drawn By: RJA Date: 1/29/19
Checked By: RJA Date: 1/29/19
Designed By: RJA Date: 1/29/19

Revisions

Num.	Description	Date

NOT FOR CONSTRUCTION
100% SUBMITTAL
NOVEMBER 8, 2019

CITY OF MILPITAS CALIFORNIA JANUARY 20, 1954

CITY OF MILPITAS
ENGINEERING DIVISION
CENTRE POINTE - PENITENCIA CREEK PEDESTRIAN BRIDGE
ACROSS EAST PENITENCIA CREEK BETWEEN McCANDLESS DRIVE AND MONTAGUE EXPRESSWAY
TITLE SHEET

RECOMMENDED FOR BIDDING BY: _____ DATE: _____
MICHAEL SILVEIRA, PE CIP MANAGER
APPROVED FOR BIDDING BY: _____ DATE: _____
Steven P. Erickson P.E. City Engineer

PROJECT NO. 2005
Rec. Dwg No.
SCALE: NONE
SHEET 1 OF 16

PLOT DATE: November 6, 2019
FILE PATH: W:\Jobs 12\22015\Drawings\Final\Offsite IP – Penitencia Pedestrian Bridge\Improvement Plans\1 TITLE SHEET.dwg

PROJECT INFORMATION

City of Milpitas: Engineering Department
455 E. Calaveras Blvd.
Milpitas, California 95035
(408) 586-3315
Fax (408) 586-3305
Contact: Maren Schram, P.E.
City Project Manager

Civil Engineer: Ruggeri-Jensen-Azar & Associates
8055 Camino Arroyo
Gilroy, California 95037
(408) 848-0300
Fax (408) 848-0302
Contact: Luis Santiago-Sotelo, P.E.

Structural Engineer: Biggs Cardosa Associates, Inc.
865 The Alameda
San Jose, California 95126
(408) 296-5515
Fax (408) 296-8114
Contact: Sarah Moyles, P.E.

Geotechnical Engineer: ENGEO Incorporated
6399 San Ignacio Ave., Suite 150
San Jose, CA 95119
(408) 574-4900
Fax (888) 279-2698
Contact: Theodore P. Bayham, P.E., G.E.

PG&E NOTES

EMERGENCY PHONE NUMBER: 1-800-743-5000

1. Grading/Excavation: PG&E requires a minimum of existing grade or 36 inches of cover over gas lines (whichever is less). Based on external stress calculations, the maximum allowable fill over the pipeline easement is 24" from existing grade. Any excavations, including grading work, above or around the gas transmission facilities must be performed while a PG&E inspector is present. This includes all laterals, subgrades, gas line depth verifications (potholes), etc. Please follow PG&E Work Procedure TD-4412P-05 "*Excavation Procedures for Damage Prevention*" when working in the vicinity of the gas transmission pipeline. Any plans to expose and support a PG&E gas transmission pipeline across an open excavation need to be approved by PG&E Engineering in writing PRIOR to performing the work.

2. Construction loading: Care must be taken to ensure the safety of the pipeline and the public. There are wheel loading restrictions over the pipeline which will limit the construction equipment used during road/site grading and building operations over the pipeline. Minimally invasive construction techniques must be utilized to minimize damage to the pipeline coating or the pipeline itself. For compaction, please use walk-behind compaction equipment if within 2-feet of the pipeline. At greater than 2-feet, use only equipment that meets the Wheel Loading limits shown below. These limits will be enforced within 10 feet of the pipeline:

Wheel Weight Limits PGE L-300A-300B	
COVER	LB. per Wheel
Less than 2 ft	hand dig
2 ft	4,000
3 ft	7,500
4 ft	9,500
5 ft	10,250
6 ft	10,250

3. Structures: No structures are to be built on the easements. This includes fences, water fountains, pools, ponds, decks, patios, building overhangs, signs, carports, septic or other tanks, leach fields, bioswale areas, storage sheds, loading ramps, or similar.

4. Substructures: All utility crossings must be as close to perpendicular as feasible (90° +/- 15°) to the 20 inch or 34 inch gas lines and must be separated by a minimum of 24 inches from the gas pipelines. Parallel utilities, electroliers, water lines, 'kicker blocks', storm drain inlets, drainage outlets, water meters, valves, back pressure devices or other utility substructures cannot be allowed in the PG&E easement/right of way or within 10 feet of the pipeline, whichever is greater.

5. Cathodic Protection: The active gas transmission pipelines in the project area are protected from corrosion with an "Impressed Current" Cathodic Protection System. Any proposed substructures/facilities, such as metal conduit, pipes, service lines, ground rods, anodes, wires, etc. that may affect the pipeline Cathodic Protection System will require review and approval by PG&E Corrosion Engineering.

6. Landscaping: Trees or deep rooted shrubs shall not be located within 10 feet of edge of the 20"/34" pipe (pipe zone). Trees less than 12 inches in diameter with non-intrusive root structures can be placed outside of the 10 foot pipe zone. This is in accordance with PG&E Utility Standard TD-4490S "Gas Pipeline Rights-of-Way Management" Section 2.

7. Pipeline Markers: PG&E requires pipeline markers be placed along the pipeline route in order to ensure public awareness of the presence of the pipeline, as well as allow visual confirmation of the pipeline location during aerial patrols. Any existing markers will be temporarily relocated to accommodate construction work, but disk or post markers must be reinstalled at the property lines and public road crossings at a minimum.

8. Boring/Trenchless Installations: PG&E must review and approve of 3rd party plans to bore across or parallel to (within 10 feet) a gas transmission pipeline. There are stringent criteria to pothole the gas transmission facility at regular intervals for all parallel bore installations. A PG&E Standby Inspector must be present during all pothole and boring/trenchless installations within 10 feet of the pipelines.

9. Fencing: Care must be taken to ensure the safety and accessibility of the pipelines. No parallel fencing will be allowed within the easements, and any perpendicular fencing will require 14 foot access gates, secured with PG&E corporation locks. Any temporary construction fencing must be coordinated with PG&E Operations personnel, and a PG&E corporation lock place on the gate to allow PG&E access to the Gas Transmission Pipeline Easement at all times.

GENERAL NOTES

1. All work and materials shall comply with standard specifications, construction details, and standard drawings of the City of Milpitas available in the City Engineer's office. It is the responsibility of the contractor to obtain permits necessary to perform the improvements in these plans from the appropriate agencies and to comply with the agencies' requirements. The contractor must comply with all applicable national, state and local laws.

2. Plans used for construction of public facilities purposes must be signed by the City Engineer or his representative. Any subsequent changes shall be approved by the City Engineer or his representative prior to their construction.

3. The official copy of these plans are on file in the office of the City Engineer in Milpitas.

4. This plan is subject to review and subsequent approval in the event the work has not commenced within six (6) months of the date of plan approval.

5. All utilities and improvements that become damaged during construction shall be completely restored to the satisfaction of the City at no additional cost to the City.

6. A $2,000 deposit shall be made to the City of Milpitas and a construction recycled water meter shall be obtained for incidental water used during construction at the Contractor's expense.

7. The Contractor shall notify the City 48 hours in advance of any work to be done in order that inspection may be provided.

8. Prior to any work, the contractor shall obtain a City Business license.

9. The Contractor is responsible for the preservation and or perpetuation of all existing monuments and stakes within the Contractor's area of work. The Contractor shall not disturb or remove any monuments or stakes without the permission of the City Engineer, and he shall bear the expense of resetting any monuments or stakes which may be disturbed or removed with or without permission. The Contractor shall provide a minimum of 15 working days-notice to the City prior to disturbance or removal of existing monuments or stakes. The Contractor shall utilize the services of a California Licensed Land Surveyor to reset all disturbed or removed monuments and stakes or provide witness monuments if agreed upon with City, and file the required documentation with the County Surveyor pursuant to the Business and Professions Code Section 8771.

10. Construction shall not begin until 7 AM and shall end by 7 PM, weekdays and weekends. Without prior approval from the City of Milpitas, construction is not permitted on holidays.

11. A National Pollution Discharge Elimination System Permit (NPDES construction permit) is required prior to commencement of construction activity related to this site and shall be obtained by the owner and/or owner's contractor as appropriate. Any discharge (during construction) of groundwater into the downstream storm system must be uncontaminated. The contractor shall make this determination prior to any discharge.

12. If archaeological resources or human remains are discovered during construction, refer to project specifications.

13. All grading shall comply with City of Milpitas Grading Ordinance, this plan, the Geotechnical Report prepared by ENGEO Incorporated for this project and for "Lower Penitencia Creek Pedestrian Bridge" dated April 24, 2018 including all subsequent addendums. All grading work shall be done under the observation of the Geotechnical Engineer. The Geotechnical Engineer shall be notified 48 hours before the start of any grading.

14. The Contractor is responsible for matching existing streets, surrounding landscape, and other improvements with a smooth transition in paving, curbs, gutters, sidewalks, and grading. Abrupt or apparent changes in grades or cross slopes shall be avoided.

GENERAL NOTES (CONTINUED)

15. The Contractor agrees that, in accordance with generally accepted construction practices, the Contractor will be required to assume sole and complete responsibility for job site conditions during the course of construction of this project, including safety of all persons and property. This requirement shall apply continuously and not be limited to normal working hours.

16. Excavation shall be adequately shored, braced and sheeted so that the earth will not slide or settle and so that all existing improvements of any kind will be fully protected from damage. Any damage resulting from a lack of adequate shoring, bracing, and sheeting, shall be the responsibility of the Contractor, and he shall effect necessary repairs or reconstruction at his own expense. Where the excavation for a conduit, trench, and/or structure is five feet or more in depth, the Contractor shall provide adequate sheeting, shoring and bracing or equivalent method, for the protection of life, or limb, which shall conform to the applicable construction safety orders of the Division of Industrial Safety of the State of California. The Contractor shall always comply with OSHA requirements.

17. The Contractor shall take effective action to prevent the formation of any airborne dust nuisance and shall be responsible for any damage resulting from his failure to do so.

18. Existing underground utilities and improvements are shown in their approximate locations based upon record information available at the time of the preparation of these plans. Locations may not have been verified in the field and no guarantee is made as to the accuracy or completeness of the information shown. The Contractor shall notify utility companies at least 2 working days in advance of Construction to field locate utilities. Call Underground Service Alert (USA) at 1-800-227-2600. It shall be the responsibility of the Contractor to determine the existence and location of utilities shown on these plans, indicated in the field by locating services, or evidenced by facilities visible at or adjacent to the job site. Any additional cost incurred as a result of the Contractor's failure to verify locations of existing utilities prior to beginning construction shall be borne by the Contractor and is deemed included and merged in the contract unit price. The contractor shall excavate inspection holes ("pot holes") and determine the location and depth of all underground structures and utilities that are in the vicinity of and/or may be affected by the proposed improvement work, at Contractor's expense, prior to any construction work which could damage or conflict with said structures and/or utilities.

19. The Contractor shall meet and follow all NPDES requirements in effect at the time of construction.

20. Signs shown in the plans shall be installed on wood posts per State Specifications Section 82.

LEVEE FILL SPECIFICATIONS

1. Fill material for trench backfill of levees and for levee embankment may be either imported backfill material or suitable material from trench excavation blended with imported earth fill material. The fill material is to be free of debris, organic or deleterious material and not contain rocks or lumps over 4 inches in greatest dimension; no more than 15% of the rocks or lumps should be larger than 2 ½ inches. The fill material shall contain at least 75% finer than the #4 U.S. Standard Sieve and 50% finer than the #200 Sieve. The liquid limit shall be less than 40 and the plasticity index shall be between 10 and 20. Levee fill material should be relatively impervious (permeability less than 10 to the minus 6 cm/sec).

2. Surfaces exposed by stripping or excavation shall be scarified to a minimum depth of 6 inches and compacted to a relative compaction of not less than 95% based on ASTM D1557 standard. The loose thickness of each layer of embankment material before compaction shall not exceed 8 inches, and each lift shall be compacted to at least 90% relative compaction based on ASTM D1557 standard. The field density and moisture content of compacted fill will be determined according to ASTM D1556, D2992 and D3017 standard procedures. Any backfilled area not meeting the minimum test requirements shall be removed and recompacted until tests meet the minimum requirements. Jetting or ponding is not permitted.

3. No thin, sliver fills will be accepted. Where compacted channel embankment is required or where replacement in over excavated areas must be accomplished, the new embankment must be placed in thin, maximum 8 inch thick horizontal layers with a minimum width of 6 feet. This specified width may be any combination of new fill plus cut into existing slope, except that a minimum cut of 2 feet into existing slope per layer of fill must be made. Slope shall be trimmed to conform to existing section after placement of fill has been completed.

AGGREGATE SPECIFICATIONS

1. The general extent of furnishing and installing aggregate base is shown on the drawings and includes, but is not limited to, the following: concrete walkways and decomposed granite trail.

2. Submit manufacturer's certification that products comply with requirements of the contract documents.

3. Manufacturer qualifications – Obtain required products from a single manufacturer. Provide accessory items only as produced or recommended by manufacturer of primary products.

4. Aggregate base course material shall be class 2, 3/4 inch maximum as per the state standard specifications.

5. Sub-grade preparation shall be performed on all areas to receive aggregate base as per State Standard Specifications. spreading and compacting aggregate base courses shall be as specified in the plans and the State Standard Specifications. Aggregate bases shall be compacted at min. 95% compaction.

   Where placement of up to 2 inch aggregate base is shown on plans, contractor shall not perform any preparation of subgrade to receive aggregate base.

DECOMPOSED GRANITE SPECIFICATIONS

1. Provide all necessary materials, labor, tools and equipment to perform the work included in the section for the:
   - Extent of decomposed granite paving work is shown on drawings.
   - Decomposed granite paving will have stabilizer binder additive as shown on the plans.
   - Metal header to be installed per drawings and details.

2. Submit manufacturer's "cut sheets" or product literature that products comply with requirements of the contract documents. Provide product sample with stabilizer and without for approval. Provide mock-up of 4-ft by 4-ft if requested by owner.

3. Decomposed granite shall not be installed during rainy conditions.

4. Provide owner's authorized representative with the following excess materials for use in future for repair, including:
   - 40-50 lb. bags of dg
   - 1-40 lb. bags of stabilizer additive

5. The decomposed granite material shall be produced from a virgin source of granite rock deposits and free of serpentine and deleterious or hazardous material. DG Suppliers include:
   - TMT Enterprises, San Jose, CA 408-432-9040
   - Lyngso Garden Materials, Inc. Redwood City 650-364-1730
   - South Bay Materials, San Jose, CA 408-977-1855, or approved equal.

6. The stabilized decomposed granite shall be pre-mixed and contain a stabilizer to be patented, non-toxic, organic binder that is a colorless and odorless concentrated powder than binds decomposed granite together to produce a firm surface. Suppliers include:
   - Stabilizer Solutions, INC. 1-800-336-2468, or approved equal.

7. Apply chemical weed control agent, "Ronstar g" or approved equal, in strict compliance with manufacturer's recommended dosages and application instruction. Apply "Ronstar g" prior to the installation of aggregate base.

8. Placement of Decomposed Granite Upon thorough moisture penetration, compact aggregate screenings to 95% relative compaction by compaction equipment such as; double drum roller (2-4 ton) or single drum roller (1000 lbs.) vibratory plate tamp. do not begin compaction for 6 hours after placement and up to 48 hours. take care in compacting decomposed granite when adjacent to planting and irrigation systems. Remove and replace decomposed granite paving that is damaged, defective or does not meet the requirements of this section.

CONCRETE PAVEMENT SPECIFICATIONS

1. Comply with City of Milpitas Standard Drawings No 427 Residential Sidewalk.

2. Provide all necessary materials, labor, tools and equipment to perform the work included in the section for the:
   - Installation of forming for walkways.
   - Placing reinforcement.
   - Placing and finishing concrete.
   - Curing of concrete.

3. Acquire cement and aggregate from same source for all work.

4. Construct concrete surface course only when atmospheric temperature is above 40 degrees F., when the underlying base is dry, and when weather is not rainy.

5. Concrete shall be Proportion normal-weight concrete mixes to provide the following properties:
   - Compressive Strength: Minimum 3000 psi at 28 days.
   - Slump Limit: Minimum 2 inches, maximum 4 inches.
   - Aggregate Size (maximum): 1 inch.
   - W/C Ratio: 0.50 maximum at point of placement.
   - Air Content: 5-1/2 percent plus or minus 1.5 percent.
   - Drying Shrinkage Limit: 0.04 percent. Drying shrinkage limit is percentage of change in length after 21 days of drying when tested per ASTM C157.

BIGGS CARDOSA ASSOCIATES INC
STRUCTURAL ENGINEERS
865 The Alameda
San Jose, California 95126
408-296-5515

RJA
RUGGERI-JENSEN-AZAR
ENGINEERS ▪ PLANNERS ▪ SURVEYORS
8055 CAMINO ARROYO GILROY, CA 95020
PHONE: (408) 848-0300 FAX: (408) 848-0302

Designer Stamp:
LICENSED PROFESSIONAL ENGINEER
LUIS SANTIAGO-SOTELO
C79665
EXP.
CIVIL
STATE OF CALIFORNIA

Record Drawings

Designer: _____ Date: _____
Public Works Inspector: _____ Date: _____
Utility/Facility Dept. Head: _____ Date: _____
Project Engineer: _____ Date: _____
Public Improvements Initially Accepted by the City Council on: _____ Res. No. _____

Drawn By: RJA Date: 1/29/19
Checked By: RJA Date: 1/29/19
Designed By: RJA Date: 1/29/19

Revisions

Num.	Description	Engr. Aprv.	Date

NOT FOR CONSTRUCTION
100% SUBMITTAL
NOVEMBER 8, 2019

CITY OF MILPITAS
ENGINEERING DIVISION

CENTRE POINTE - PENITENCIA CREEK PEDESTRIAN BRIDGE
ACROSS EAST PENITENCIA CREEK BETWEEN McCANDLESS DRIVE AND MONTAGUE EXPRESSWAY

NOTES

RECOMMENDED FOR BIDDING BY: _____ DATE: _____
MICHAEL SILVEIRA, PE CIP MANAGER

PROJECT NO. 2005
Rec. Dwg No.
SCALE: NONE
SHEET 2 OF 16

PLOT DATE: November 8, 2019
FILE PATH: W:\Jobs 12\122015\Drawings\Final\Offsite IP - Penitencia Pedestrian Bridge\Improvement Plans\2 NOTES.dwg

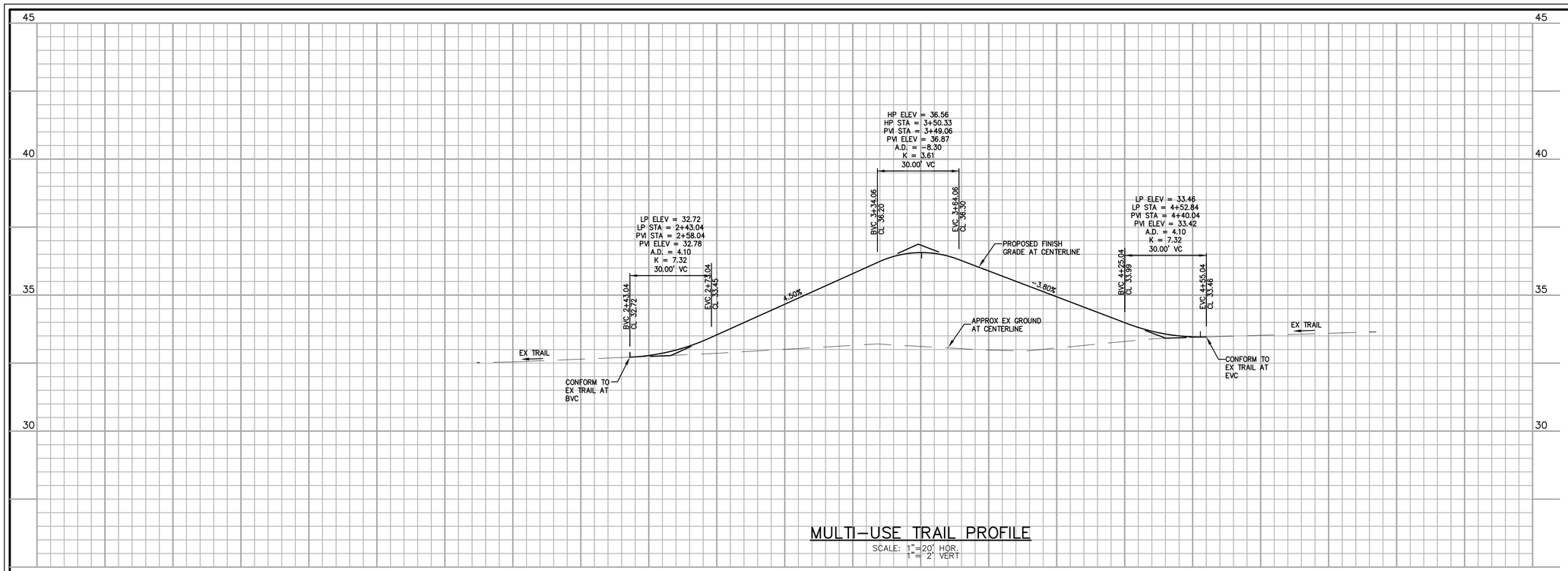

MULTI-USE TRAIL PROFILE

SCALE: 1"=20' HOR.
1"= 2' VERT

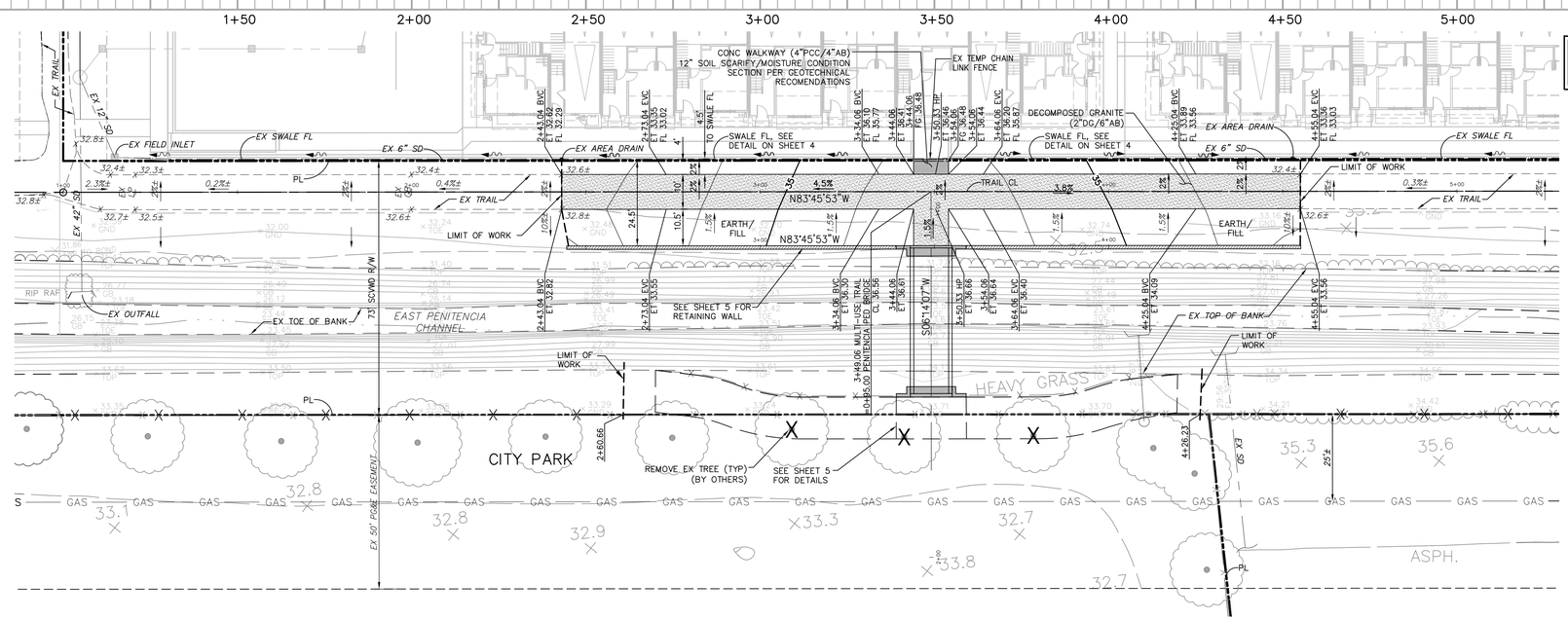

MULTI-USE TRAIL PLAN

SCALE: 1"=20'

ALL ELEVATIONS SHOWN ON THESE PLANS ARE BASED ON NGVD29

NOTES:

1. EXISTING FENCE REMOVAL AND TREE REMOVAL BY OTHERS WILL NEED TO BE COMPLETED PRIOR TO THE START OF CONSTRUCTION.
2. ALL TEMPORARY FENCING SHALL BE REMOVED AT THE END OF CONSTRUCTION.

LEGEND

- CONCRETE SIDEWALK/ABUTMENT
- DECOMPOSED GRANITE
- X EXISTING TREE TO BE REMOVED (BY OTHERS)

N

0 20 40 60

SCALE IN FEET: 1"= 20'

BIGGS CARDOSA ASSOCIATES INC
STRUCTURAL ENGINEERS
865 The Alameda
San Jose, California 95126
408-296-5515

RJA
RUGGERI-JENSEN-AZAR
ENGINEERS ▪ PLANNERS ▪ SURVEYORS
8055 CAMINO ARROYO GILROY, CA 95020
PHONE: (408) 848-0300 FAX: (408) 848-0302

Designer Stamp:

LICENSED PROFESSIONAL ENGINEER
LUIS SANTIAGO-SOTELO
C79665
EXP.
CIVIL
STATE OF CALIFORNIA

Record Drawings

Designer: _____ Date: _____
Public Works Inspector: _____ Date: _____
Utility/Facility Dept. Head: _____ Date: _____
Project Engineer: _____ Date: _____
Public Improvements Initially Accepted by the City Council on: _____ Res. No. _____

Drawn By: RJA Date: 1/29/19
Checked By: RJA Date: 1/29/19
Designed By: RJA Date: 1/29/19

Revisions

Num.	Description	Engr. Aprv.	Date

NOT FOR CONSTRUCTION
100% SUBMITTAL
NOVEMBER 8, 2019

CITY OF MILPITAS
CALIFORNIA
INCORPORATED JANUARY 26, 1954

CITY OF MILPITAS
ENGINEERING DIVISION

CENTRE POINTE - PENITENCIA CREEK PEDESTRIAN BRIDGE
ACROSS EAST PENITENCIA CREEK BETWEEN McCANDLESS DRIVE AND MONTAGUE EXPRESSWAY

MULTI-USE TRAIL 2+43 TO 4+55

RECOMMENDED FOR BIDDING BY: _____ DATE: _____
MICHAEL SILVEIRA, PE CIP MANAGER

PROJECT NO. 2005
Rec. Dwg No.
SCALE: 1"=2' V 1"=20' H
SHEET 3 OF 16

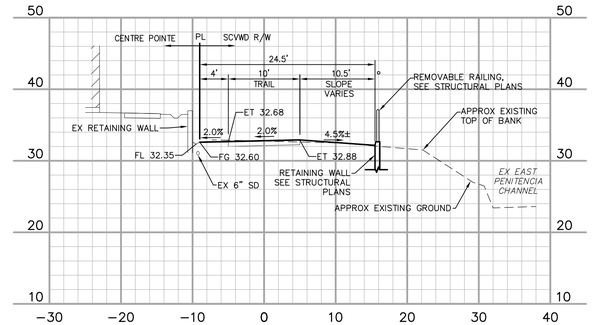

2+50.00

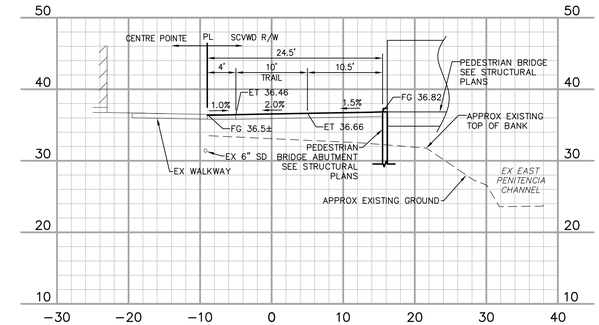

3+50.00

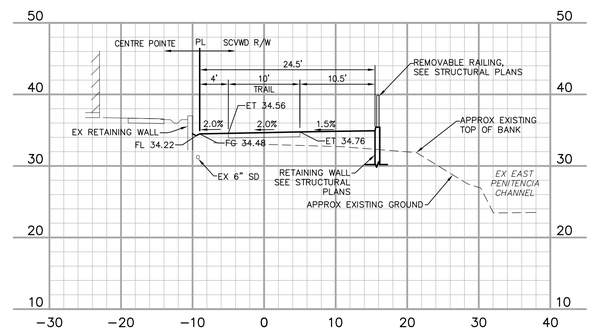

3+00.00

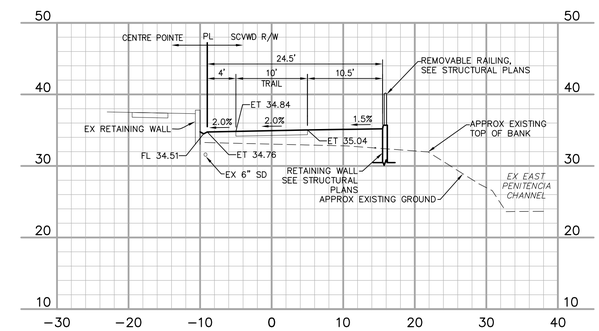

4+00.00

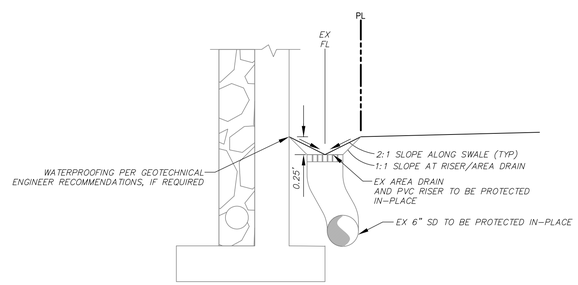

NOTE: ALL EXISTING RETAINING WALL, FENCE AND SWALE IMPROVEMENTS HAVE BEEN CONSTRUCTED BY DR HORTON CENTRE POINTE PROJECT. CONTRACTOR TO PROTECT EXISTING IMPROVEMENTS IN-PLACE AND RE-CONSTRUCT SWALE AS NEEDED

SWALE DETAIL
(SECTION AT STA. 2+43± TO 4+55±)
NO SCALE

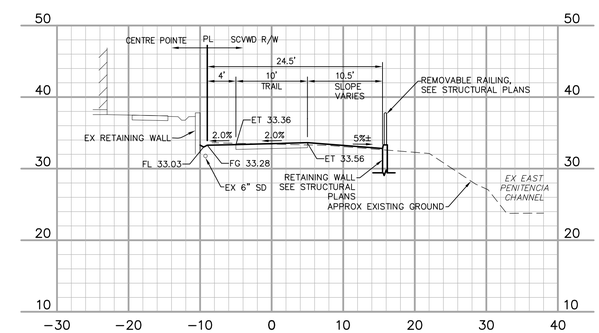

4+50.00

ALL ELEVATIONS SHOWN ON THESE PLANS ARE BASED ON NGVD29

0 20 40 60
SCALE IN FEET: 1"= 10'

BIGGS CARDOSA ASSOCIATES INC
STRUCTURAL ENGINEERS
865 The Alameda
San Jose, California 95126
408-296-5515

RJA
RUGGERI-JENSEN-AZAR
ENGINEERS ▪ PLANNERS ▪ SURVEYS
8055 CAMINO ARROYO GILROY, CA 95020
PHONE: (408) 848-0300 FAX: (408) 848-0302

BCR

Designer Stamp:
LICENSED PROFESSIONAL ENGINEER LUIS SANTIAGO SOTELO C79665 EXP. CIVIL STATE OF CALIFORNIA

Record Drawings

Designer: _____ Date: _____
Public Works Inspector: _____ Date: _____
Utility/Facility Dept. Head: _____ Date: _____
Project Engineer: _____ Date: _____
Public Improvements Initially Accepted by the City Council on: _____ Res. No. _____

Drawn By: RJA Date: 1/29/19
Checked By: RJA Date: 1/29/19
Designed By: RJA Date: 1/29/19

Revisions

Num.	Description	Engr. Aprv.	Date

NOT FOR CONSTRUCTION
100% SUBMITTAL
NOVEMBER 8, 2019

CITY OF MILPITAS
CALIFORNIA
JANUARY 20, 1954

CITY OF MILPITAS
ENGINEERING DIVISION

CENTRE POINTE - PENITENCIA CREEK PEDESTRIAN BRIDGE
ACROSS EAST PENITENCIA CREEK BETWEEN McCANDLESS DRIVE AND MONTAGUE EXPRESSWAY

MULTI-USE TRAIL SECTIONS

RECOMMENDED FOR BIDDING BY: _____ DATE: _____
MICHAEL SILVEIRA, PE CIP MANAGER

PROJECT NO. 2005
Rec. Dwg No.
SCALE: 1"=10'
SHEET 4 OF 16

PLOT DATE: November 6, 2019
FILE PATH: W:\Jobs 12\122015\Drawings\Final\Offsite IP - Penitencia Pedestrian Bridge\Improvement Plans\4 MULTI-USE TRAIL SECTIONS.dwg

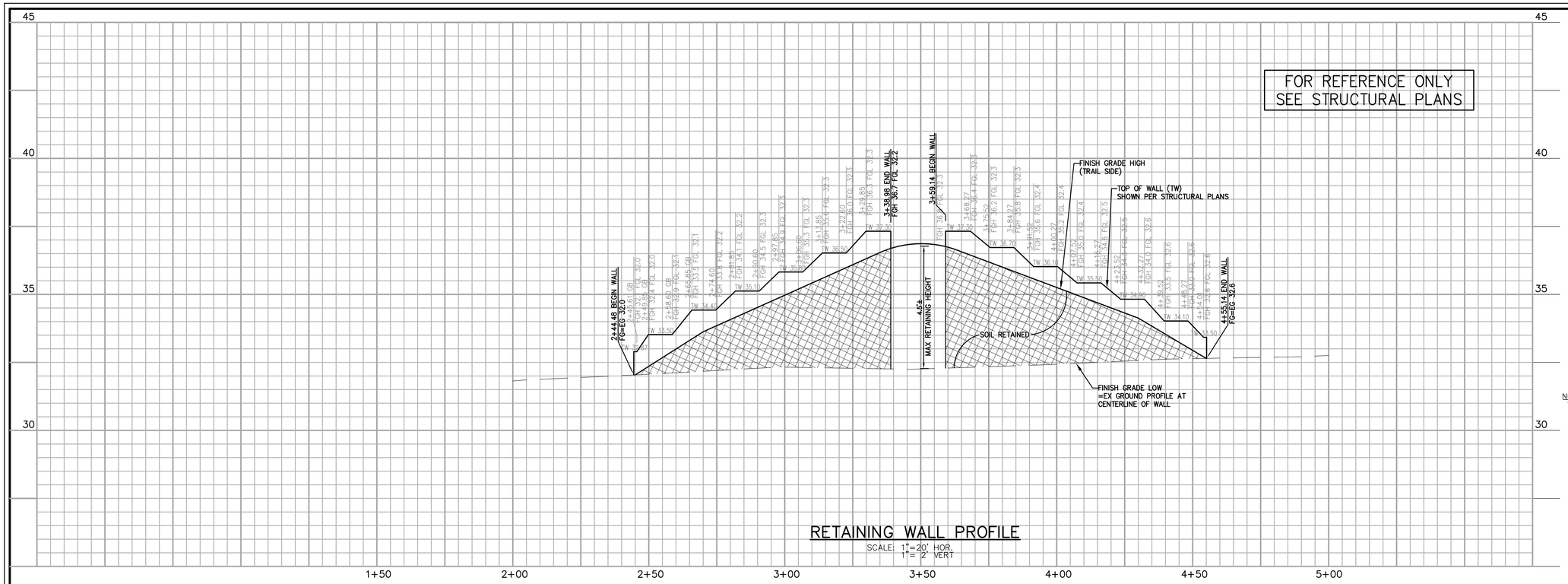

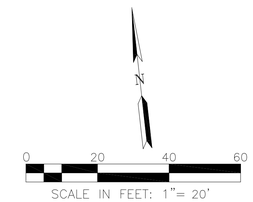

NOTES:
1. EXISTING FENCE REMOVAL AND TREE REMOVAL BY OTHERS WILL NEED TO BE COMPLETED PRIOR TO THE START OF CONSTRUCTION.

GENERAL SIGNING NOTES

1. ALL SIGNING SHALL CONFORM TO THE APPROPRIATE PROVISIONS OF PART 2 "SIGNS" AND PART 3 "MARKINGS" OF THE LATEST VERSION (2014) OF THE CALIFORNIA MANUAL ON UNIFORM TRAFFIC CONTROL DEVICES (CAMUTCD) AND THE CITY STANDARDS AND DETAILS OR PER CITY STANDARD.

SIGN KEY

R3-17AP	"AHEAD" SIGN
R9-3	NO PEDESTRIAN ACCESS SIGN
R20A(CA)	VEHICLE WEIGHT LIMIT SITE (5-TON)

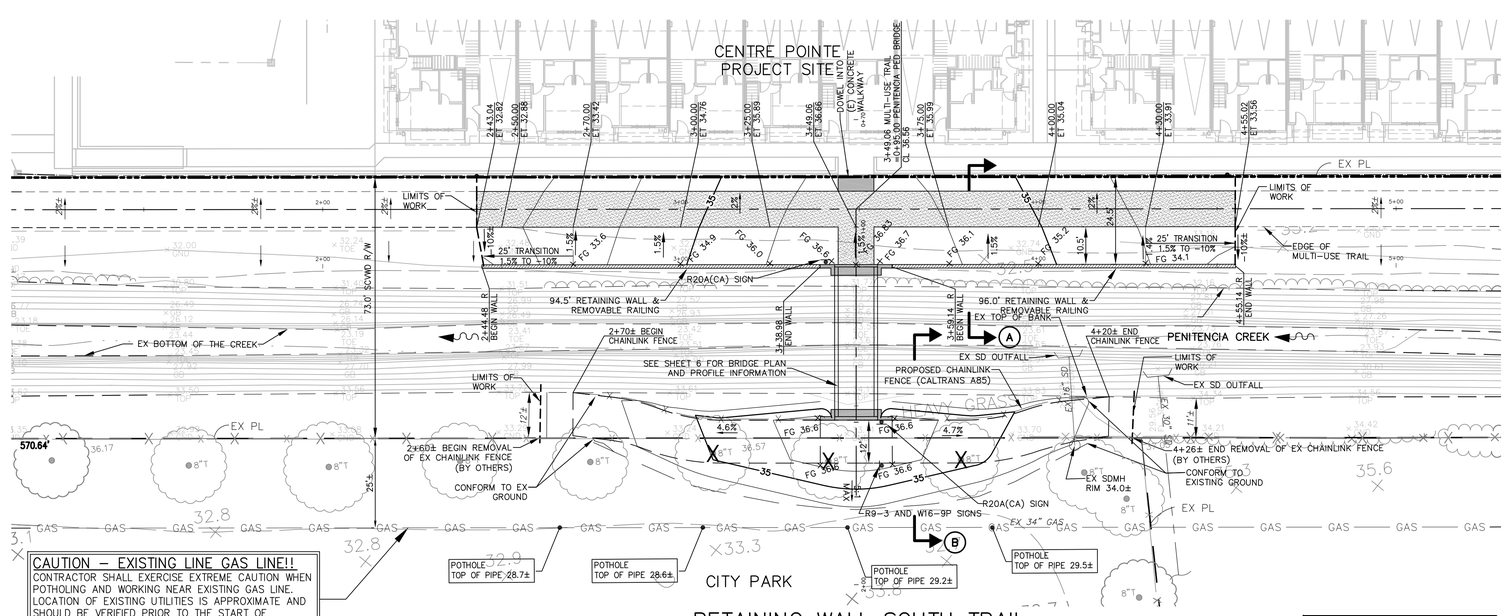

CAUTION – EXISTING LINE GAS LINE!!
CONTRACTOR SHALL EXERCISE EXTREME CAUTION WHEN POTHOLING AND WORKING NEAR EXISTING GAS LINE. LOCATION OF EXISTING UTILITIES IS APPROXIMATE AND SHOULD BE VERIFIED PRIOR TO THE START OF CONSTRUCTION. EMERGENCY PG&E PHONE NUMBER: 1-800-743-5000

ALL ELEVATIONS SHOWN ON THESE PLANS ARE BASED ON NGVD29

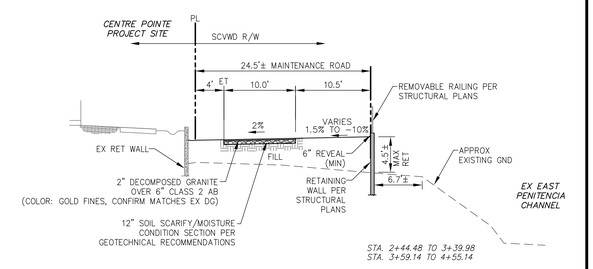

A TYPICAL TRAIL SECTION
NO SCALE

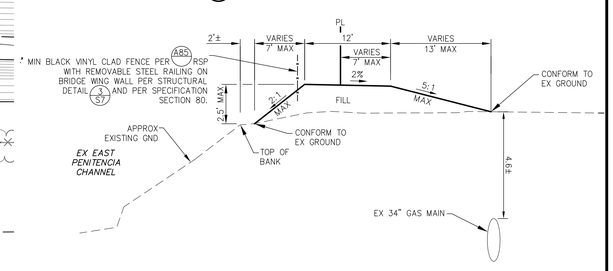

* MIN BLACK VINYL CLAD FENCE PER A85 RSP WITH REMOVABLE STEEL RAILING ON BRIDGE WING WALL PER STRUCTURAL DETAIL 3 S7 AND PER SPECIFICATION SECTION 80.

B TYPICAL FILL SECTION
NO SCALE

FENCING NOTES:
1. FENCING SHALL CONFORM TO SECTION 80 OF THE STANDARD SPECIFICATION. TYPE CL-6 BLACK VINYL COATED FUSION BONDED SHALL BE USED FOR FENCES, GATES, POSTS, BARS, TENSION BARS AND APPURTENANCES. FENCE POSTS SHALL BE SET INTO THE HOLE WITHOUT BACKFILL AND FILLED WITH CLASS 3 CONCRETE PAVEMENT IN ACCORDANCE WITH SECTION 72-5.04.

BIGGS CARDOSA ASSOCIATES INC
STRUCTURAL ENGINEERS
865 The Alameda
San Jose, California 95126
408-296-5515

RJA
RUGGERI-JENSEN-AZAR
ENGINEERS ▪ PLANNERS ▪ SURVEYORS
8055 CAMINO ARROYO GILROY, CA 95020
PHONE: (408) 848-0300 FAX: (408) 848-0302

BCR

Designer Stamp:
LICENSED PROFESSIONAL ENGINEER LUIS SANTIAGO-SOTELO C79665 EXP. CIVIL STATE OF CALIFORNIA

Record Drawings

Designer: _____ Date: _____
Public Works Inspector: _____ Date: _____
Utility/Facility Dept. Head: _____ Date: _____
Project Engineer: _____ Date: _____
Public Improvements Initially Accepted by the City Council on: _____ Res. No. _____

Drawn By: RJA Date: 1/29/19
Checked By: RJA Date: 1/29/19
Designed By: RJA Date: 1/29/19

Revisions

Num.	Description	Engr. Aprv.	Date

NOT FOR CONSTRUCTION
100% SUBMITTAL
NOVEMBER 8, 2019

CITY OF MILPITAS
CALIFORNIA
INCORPORATED JANUARY 26, 1954

CITY OF MILPITAS
ENGINEERING DIVISION

CENTRE POINTE - PENITENCIA CREEK PEDESTRIAN BRIDGE
ACROSS EAST PENITENCIA CREEK BETWEEN McCANDLESS DRIVE AND MONTAGUE EXPRESSWAY

RETAINING WALL AND SOUTH TRAIL

RECOMMENDED FOR BIDDING BY: _____ DATE: _____
MICHAEL SILVEIRA, PE CIP MANAGER

PROJECT NO. 2005
Rec. Dwg No.
SCALE: 1"=2' V 1"=20' H
SHEET 5 OF 16

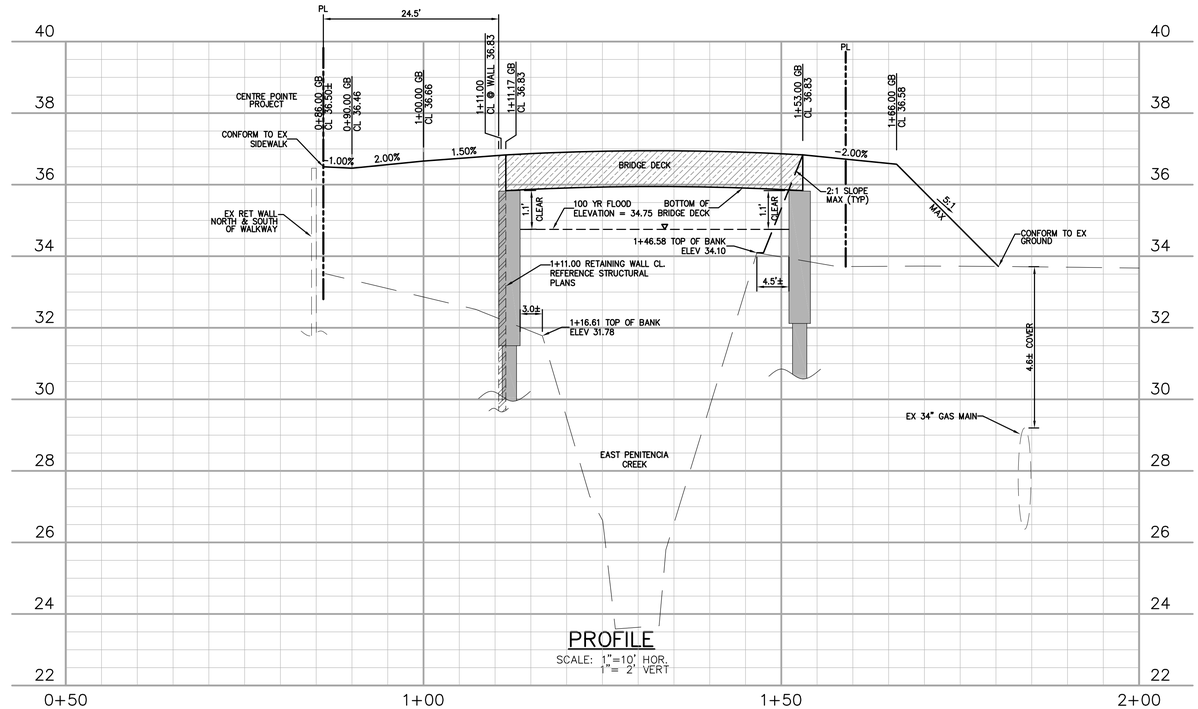

PROFILE

SCALE: 1"=10' HOR.
1"= 2' VERT

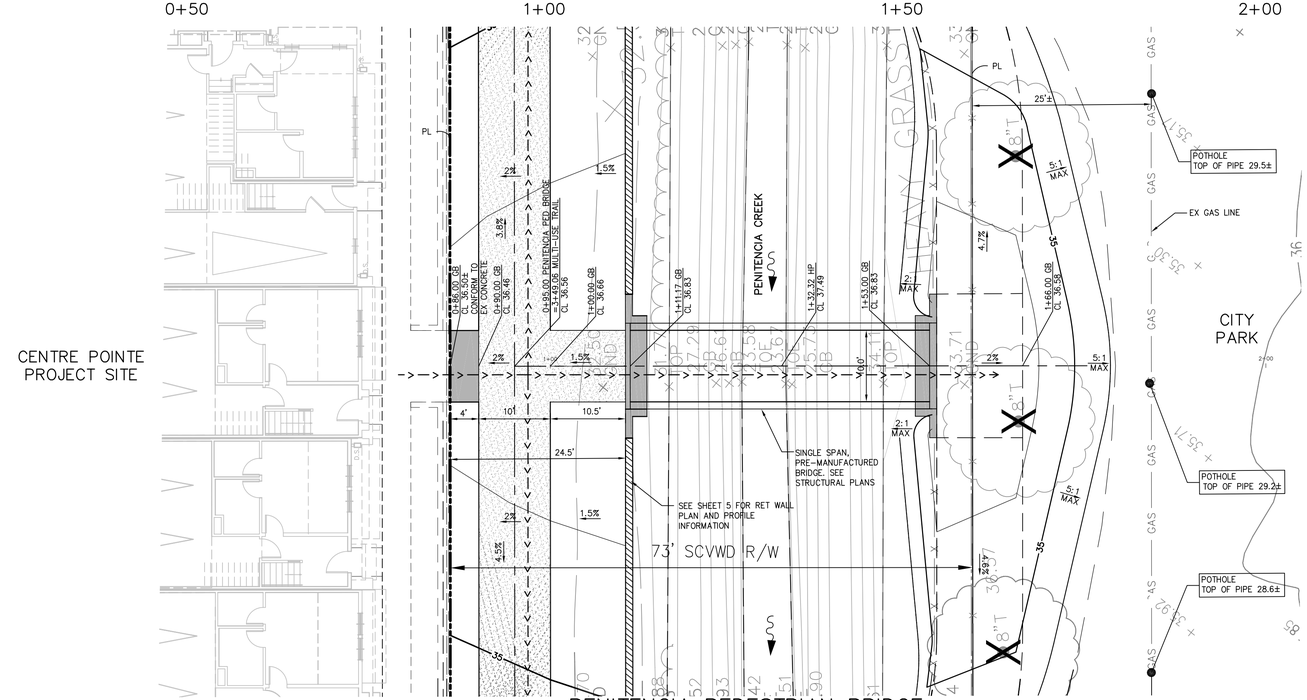

PENITENCIA PEDESTRIAN BRIDGE

SCALE: 1"=10'

LEGEND

- ACCESSIBLE ROUTE
- CONCRETE SIDEWALK/ABUTMENT
- DECOMPOSED GRANITE

NOTE

ACCESSIBLE ROUTE TO AND FROM PARK TO BE PROVIDED AS PART OF THE PARK PROJECT. THE FILL SLOPE (5:1 MAX) WITHIN PARK IS INTERIM CONDITION.

ALL ELEVATIONS SHOWN ON THESE PLANS ARE BASED ON NGVD29

0 10 20 30
SCALE IN FEET: 1"= 10'

BIGGS CARDOSA ASSOCIATES INC
STRUCTURAL ENGINEERS
865 The Alameda
San Jose, California 95126
408-296-5515

BCA

RJA
RUGGERI-JENSEN-AZAR
ENGINEERS ▪ PLANNERS ▪ SURVEYORS
8055 CAMINO ARROYO GILROY, CA 95020
PHONE: (408) 848-0300 FAX: (408) 848-0302

Designer Stamp:

LICENSED PROFESSIONAL ENGINEER
LUIS SANTIAGO-SOTELO
C79665
EXP.
CIVIL
STATE OF CALIFORNIA

Record Drawings

Designer: _____ Date: _____
Public Works Inspector: _____ Date: _____
Utility/Facility Dept. Head: _____ Date: _____
Project Engineer: _____ Date: _____
Public Improvements Initially Accepted by the City Council on: _____ Res. No. _____

Drawn By: RJA Date: 1/29/19
Checked By: RJA Date: 1/29/19
Designed By: RJA Date: 1/29/19

Revisions

Num.	Description	Engr. Appv.	Date

NOT FOR CONSTRUCTION
100% SUBMITTAL
NOVEMBER 8, 2019

CITY OF MILPITAS
CALIFORNIA
JANUARY 20, 1954

CITY OF MILPITAS
ENGINEERING DIVISION

CENTRE POINTE - PENITENCIA CREEK PEDESTRIAN BRIDGE
ACROSS EAST PENITENCIA CREEK BETWEEN McCANDLESS DRIVE AND MONTAGUE EXPRESSWAY

BRIDGE PLAN AND SOUTH TRAIL

RECOMMENDED FOR BIDDING BY: _____ DATE: _____
MICHAEL SILVEIRA, PE CIP MANAGER

PROJECT NO. 2005
Rec. Dwg No.
SCALE: 1"=2' V, 1"=10' H
SHEET 6 OF 16

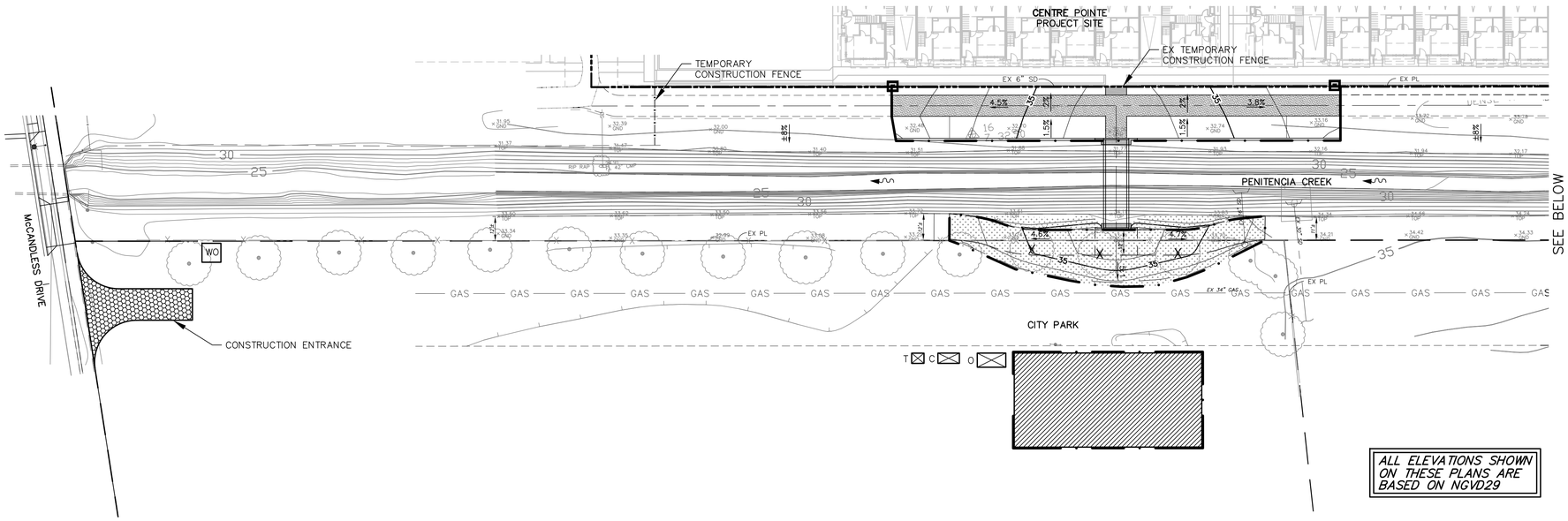

ALL ELEVATIONS SHOWN ON THESE PLANS ARE BASED ON NGVD29

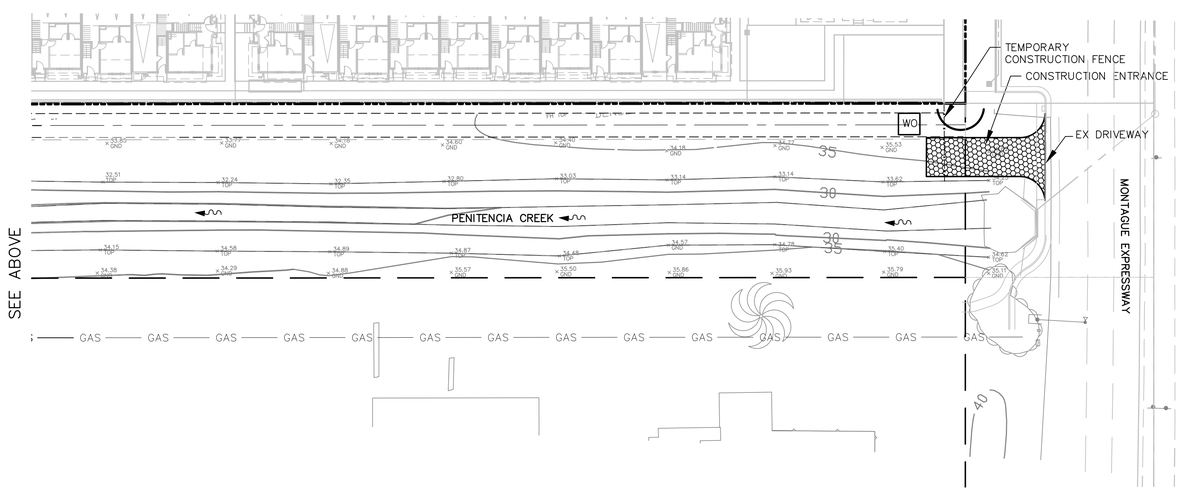

NOTES:

1. ALL TEMPORARY FENCING SHALL BE REMOVED AT THE END OF CONSTRUCTION.
2. CONTRACTOR SHALL REPAIR ANY DAMAGE TO DECOMPOSED GRANITE PATH AND/OR EXISTING IMPROVEMENTS CAUSED BY CONSTRUCTION ACTIVITIES. REPAIRS SHALL BE MADE TO CITY'S SATISFACTION.

NOTE: TEMPORARY STABILIZED CONSTRUCTION ENTRANCE TO BE REMOVED UPON COMPLETION OF IMPROVEMENTS AND AREA TO BE RESTORED TO ORIGINAL CONDITIONS.

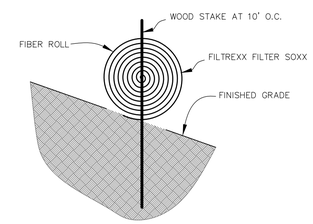

FIBER ROLL WITHIN WATER DISTRICT RIGHT OF WAY

NO SCALE

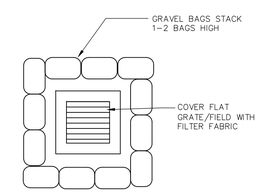

DRAIN INLET SEDIMENT BARRIER

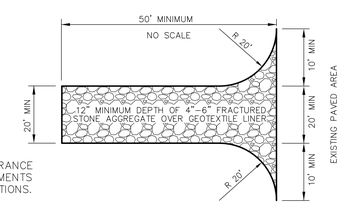

*SEE CASQA BMP FACT SHEETS TC-1 & TC-3 FOR MORE INFORMATION.

TEMPORARY STABILIZED CONSTRUCTION ENTRANCE

NO SCALE

WATER POLLUTION CONTROL NOTES

1. General: Refer to the project specifications for more information regarding good site management "housekeeping", BMPs, and additional monitoring and reporting requirements. It is the responsibility of the contractor to ensure this Erosion Control Plan are properly implemented.
2. Revisions: This Erosion Control Plan may not cover all the situations that may arise during construction due to unanticipated field conditions. The contractor shall modify this plan as necessary to identify proper erosion and sediment controls for the current phase of work.
3. Drain Inlet Protection: Prior to beginning construction, install drain inlet sediment barriers per the detail on this plan on all drain inlets in the vicinity of construction operations.
4. Preserve Existing Property/Vegetative: Keep vehicles and equipment off exposed soil and preserve existing vegetation as much as possible.
5. Stockpile/Staging Management: All stockpiles and staging areas shown on this plan are conceptual. Actual stockpile and staging area locations will be dependent on the construction phase and work zone. The contractor shall identify actual staging areas on this plan. Cover all stockpiles with a plastic cover when not in use and prior to storm events. Store chemicals in watertight containers with appropriate secondary containments to prevent any spillage or leakage. Install and maintain sand bag barriers and/or fiber rolls around the base of all stockpiles at all times.
6. Material Delivery: All haul and delivery trucks with loose material shall be covered or a minimum two feet of freeboard maintained.
7. Street Cleaning: All paved areas shall be kept free and clear of earth material and debris. Streets shall be cleaned with a sweep vacuum truck as needed.
8. Vehicle Maintenance, Cleaning & Fueling: Vehicle maintenance, cleaning, and fueling is not allowed at the construction site and shall take place at designated offsite locations.
9. Concrete Waste Management: Washout of concrete wastes shall take place at designated onsite locations and in accordance with CASQA Handbook BMP WM-8.
10. Port-a-Pottie: Port-a-Pottie locations should be designated as far away from public access and storm drain inlets as possible. Inspect sanitation facilities regularly for leaks and spills and clean or replace as necessary to prevent discharges of pollutants to the storm water drainage system or receiving water.
11. Construction Traffic: Traffic speeds shall be limited to 15 mph.
12. Disturbed Area Management: Apply soil binder on disturbed areas where no work will commence within 14 days. Install and establish final stabilization measures (vegetation, pavement, etc.) as soon as possible on disturbed areas where work is complete. Utility trenches in existing streets that are not completely repaired to the final condition shall be covered with temporary pavement, plates, or other equivalent method.
13. BMP Inspection and Maintenance: Construction site BMPs shall be inspected weekly and once a day during extended storm events to ensure proper implementation and functionality. BMPs shall be repaired or replaced immediately after a deficiency has been identified. Refer to sheet BEST MANAGEMENT PRACTICES on sheet 8 for more information.
14. Dust Control: Water all active construction areas, unpaved access roads, and staging areas at least twice a day or more often as needed to prevent dust from becoming airborne and leaving the site.

SCVWD HYDROSEED NOTES

EROSION CONTROL OPTIONS FOR WORK SITES WITH EXISTING NATIVE PLANTS

These erosion control options should be followed in most areas along natural creeks where native trees, shrubs and herbs reside on or near the work site A site visit or referral of a good series of photos to a landscape professional familiar with native plants or a revegetation specialist may be needed to determine the best approach.

If no irrigation is available, if the slope is very steep, or if it's late in the season

- Use a non-biological method, such as straw with tackifier, erosion control blankets (jute netting with straw or coir filling), etc. instead of seeding.

Benefits

- This plant mix makes few if any seeds, so it cannot become a weed, and it usually lives only one year.
- The adjacent native plants can seed in thereafter.

Use if there is absolutely no time to investigate site conditions.

- Use a Failsage mix with 50 lb/ac 'Regreen' sterile wheat (Triticum X Elymus 'Regreen'), with 95% minimum purity, and minimum germination of 85%.

EROSION CONTROL OPTIONS FOR WORK SITES WITHOUT EXISTING NATIVE PLANTS

These erosion control options should be followed in areas where there is no remaining native vegetation for miles around. An example of such a site is the back slope of a levee in an urbanized area.

For Slopes 3:1 or Flatter

California Native Grass. Use a mix of:

- Prostrate Hordeum Californicum (Prostrate California Barley) @ 16 lb/ac, minimum purity 90%, minimum germination 80%
- Elymus glaucus 'Berkeley' ('Berkeley' Blue Wildrye)@ 12 lb/ac, minimum purity 95%, minimum germination 85%
- Bromus carinatus 'S.F. Bay Area' ('S.F. Bay Area' California Brome) @ 10 lb/ac, minimum purity 95%, minimum germination 85%

Failsafe Mix:

- 50lb/ac 'Regreen' sterile wheat (Triticum X Elymus Regreen'), minimum purity 95%, minimum germination 85%
- Non-biological method as outlined above

For Slopes 2:1 or Steeper

- California Native Grasses PLUS Mix. Use the mix for Slopes 3:1 or Flatter PLUS Vulpia microstachys (Three Weeks Fescue) @ 5 lb/ac, purity 95%, minimum germination 70%
- Failsafe Mix. 50 lb/ac 'Regreen' sterile wheat (Triticum X Elymus 'Regreen'), minimum purity 95%, minimum germination 85%
- Non-biological method as outlined above.
- All erosion control items shall be maintained throughout construction of the project.

WINTERIZATION NOTES

When winter operations do take place, the following measures must be taken to prevent accelerated erosion. Additional measures may be required.

1. Between October 15th and April 15th, disturbed surfaces not involved in immediate operations must be protected by mulching and/or other effective means of soil protection.
2. All surfaces shall have drainage facilities sufficient to prevent erosion on or adjacent to creek. Erosion-proof surfacing may be required in areas of high erosion hazard.
3. Runoff from a site shall be filtered by fire rolls to prevent the escape of sediment from the site. These drainage controls must be maintained by the permittee and/or property owner as necessary to achieve their purpose throughout the life of the project.
4. Erosion control measures shall be in-place at the end of each working day.
5. The Director of Building Inspection shall stop operations during periods of inclement weather if he/she determines that erosion problems are not be adequately controlled.

LEGEND

- FIBER ROLL
- SLOPE EROSION PROTECTION (HYDROSEED PER SCVWD STANDARDS)
- DRAIN INLET SEDIMENT BARRIER
- POTENTIAL STAGING AREA
- STABILIZED CONSTRUCTION ENTRANCE
- O TEMPORARY OFFICE
- C CONSTRUCTION CONTAINER
- T TEMPORARY TOILET WITH SECONDARY CONTAINMENT
- WO CONCRETE WASHOUT

N

0 30 60 90

SCALE IN FEET: 1"= 30'

BIGGS CARDOSA ASSOCIATES INC
STRUCTURAL ENGINEERS
865 The Alameda
San Jose, California 95126
408-296-5515

RJA
RUGGERI-JENSEN-AZAR
ENGINEERS ▪ PLANNERS ▪ SURVEYORS
8055 CAMINO ARROYO GILROY, CA 95020
PHONE: (408) 848-0300 FAX: (408) 848-0302

BCA

Designer Stamp:

LICENSED PROFESSIONAL ENGINEER LUIS SANTIAGO-SOTELO C79665 EXP. CIVIL STATE OF CALIFORNIA

Record Drawings

Designer: Date:
Public Works Inspector: Date:
Utility/Facility Dept. Head: Date:
Project Engineer: Date:
Public Improvements Initially Accepted by the City Council on: Res. No.

Drawn By: RJA Date: 1/29/19
Checked By: RJA Date: 1/29/19
Designed By: RJA Date: 1/29/19

Revisions

Num.	Description	Engr. Aprv.	Date

NOT FOR CONSTRUCTION
100% SUBMITTAL
NOVEMBER 8, 2019

CITY OF MILPITAS
CALIFORNIA
JANUARY 26, 1954

CITY OF MILPITAS
ENGINEERING DIVISION

CENTRE POINTE - PENITENCIA CREEK PEDESTRIAN BRIDGE
ACROSS EAST PENITENCIA CREEK BETWEEN McCANDLESS DRIVE AND MONTAGUE EXPRESSWAY

WATER POLLUTION CONTROL AND EROSION CONTROL PLAN

RECOMMENDED FOR BIDDING BY: _____ DATE: _____
MICHAEL SILVEIRA, PE CIP MANAGER

PROJECT NO. 2005
Rec. Dwg No.
SCALE: 1"=30'
SHEET 7 OF 16

BLUEPRINT FOR A CLEAN BAY

Best Management Practices for the Construction Industry

Remember: The property owner and the contractor share ultimate responsibility for the activities that occur on a construction site. You may be held responsible for any environmental damage caused by the subcontractors or employees.

Preventing Pollution: It's Up to Us

In the Santa Clara Valley, storm drains transport water directly to local creeks and San Francisco Bay without treatment. Stormwater pollution is a serious problem for wildlife dependent on our creeks and bays and for the people who live near polluted streams or baylands. Common sources of this pollution include spilled oil, fuel, and fluids from vehicles and heavy equipment; construction debris; sediment created by erosion; landscaping runoff containing pesticides or weed killers; and materials such as used motor oil, antifreeze, and paint products that people pour or spill into a street or storm drain.

Santa Clara Valley Urban Runoff Pollution Prevention Program

Thirteen valley municipalities have joined together with Santa Clara County and the Santa Clara Valley Water District to educate local residents and businesses and fight stormwater pollution. This "blueprint" summarizes "Best Management Practices "(BMPs) for stormwater pollution prevention.

Spill Response Agencies:

1. Dial 911
2. Santa Clara County Environmental Health Services (408) 299-6930
3. Governor's Office of Emergency Services Warning Center (800) 852-7550 (24 hours).

Small Business Hazardous Waste Disposal Program

Santa Clara County businesses that generate less than 27 gallons or 220 pounds of hazardous waste per month are eligible to use Santa Clara County's Small Business Hazardous Waste Disposal Program. Call (408) 299-7300 for a quote, more information or guidance on disposal.

Local Pollution Control Agencies

Santa Clara County Office of Toxics and Solid Waste Management
(408) 441-1195

Santa Clara Valley Water District
(408) 265-2600

San Jose/Santa Clara Water Pollution Control Plant
(408) 945-5300
Serving Milpitas, Cupertino, Los Gatos, Milpitas, Monte Sereno, San Jose, Santa Clara and Saratoga

Fresh Concrete and Mortar Application

Who should use this information?

- Masons and Bricklayers
- Sidewalk Construction Crews
- Patio Construction Workers
- Construction Inspectors
- General Contractors
- Home Builders
- Developers
- Concrete Delivery/Pumping Workers

Storm Drain Pollution from Fresh Concrete And Mortar Applications

Fresh concrete and cement-related mortars that wash into lakes, streams, or estuaries are toxic to fish and the aquatic environment. Disposing of these materials to the storm drains or creeks can block storm drains, causes serious problems, and is prohibited by law.

Doing the Job Right
General Business Practices

- ❑ Wash out concrete mixers only in designated wash-out areas in your yard, away from storm drains and waterways, where the water will flow into a temporary waste pit in a dirt area. Let water percolate through soil and dispose of settled, hardened concrete as garbage. Whenever possible, recycle washout by pumping back into mixers for reuse.
- ❑ Wash out chutes onto dirt areas at site that do not flow to streets or drains.
- ❑ Always store both dry and wet materials under cover, protected from rainfall and runoff and away from storm drains or waterways. Protect dry materials from wind.
- ❑ Secure bags of cement after they are open. Be sure to keep wind-blown cement powder away from streets, gutters, storm drains, rainfall, and runoff.
- ❑ Do not use diesel fuel as a lubricant on concrete forms, tools, or trailers.

During Construction

- ❑ Don't mix up more fresh concrete or cement than you will use in a two-hour period.
- ❑ Set up and operate small mixers on tarps or heavy plastic drop cloths.
- ❑ When cleaning up after driveway or sidewalk construction, wash fines onto dirt areas, not down the driveway or into the street or storm drain.
- ❑ Protect applications of fresh concrete and mortar from rainfall and runoff until the material has dried.
- ❑ Wash down exposed aggregate concrete only when the wash water can (1) flow onto a dirt area; (2) drain onto a bermed surface from which it can be pumped and disposed of properly; or (3) be vacuumed from a catchment created by blocking a storm drain inlet. If necessary, divert runoff with temporary berms. Make sure runoff does not reach gutters or storm drains.
- ❑ When breaking up pavement, be sure to pick up all the pieces and dispose of properly. Recycle large chunks of broken concrete at a local recycling facility.
- ❑ Never bury waste material. Dispose of small amounts of excess dry concrete, grout, and mortar in the trash.
- ❑ Never dispose of washout into the street, storm drains, drainage ditches, or streams.

Heavy Equipment Operation

Who should use this information?

- Vehicle and Equipment Operators
- Site Supervisors
- General Contractors
- Home Builders
- Developers

Stormwater Pollution from Heavy Equipment on Construction Sites

Poorly maintained vehicles and heavy equipment that leak fuel, oil, antifreeze or other fluids on the construction site are common sources of storm drain pollution. Prevent spills and leaks by isolating equipment from runoff channels, and by watching for leaks and other maintenance problems. Remove construction equipment from the site as soon as possible.

Doing the Job Right
Site Planning and Preventive Vehicle Maintenance

- ❑ Designate one area of the construction site, well away from streams or storm drain inlets, for auto and equipment parking, refueling, and routine vehicle and equipment maintenance. Contain the area with berms, sand bags, or other barriers.
- ❑ Maintain all vehicles and heavy equipment. Inspect frequently for and repair leaks.
- ❑ Perform major maintenance, repair jobs, and vehicle and equipment washing off site where cleanup is easier.
- ❑ If you must drain and replace motor oil, radiator coolant, or other fluids on site, use drip pans or drop cloth hs to catch drips and spills. Collect all spent fluids, store in separate containers. Recycle them wherever possible, otherwise, dispose of them as hazardous wastes.
- ❑ Do not use diesel oil to lubricate equipment parts, or clean equipment. Use only water for any onsite cleaning.
- ❑ Cover exposed fifth wheel hitches and other oily or greasy equipment during rain events.
- ❑ Use as little water as possible for dust control. Ensure water used doesn't leave silt or discharge to storm drains.

Spill Cleanup

- ❑ Clean up spills immediately when they happen.
- ❑ Never hose down "dirty" pavement or impermeable surfaces where fluids have spilled. Use dry cleanup methods (absorbent materials, cat litter, and/or rags) whenever possible and properly dispose of absorbent materials.
- ❑ Sweep up spilled dry materials immediately. Never attempt to "wash them away" with water, or bury them.
- ❑ Clean up spills on dirt areas by digging up and properly disposing of contaminated soil.
- ❑ Report significant spills to the appropriate local spill response agencies immediately. In Milpitas, dial 9-1-1 if hazardous materials might enter the storm drain.

General Construction and Site Supervision

Who should use this information?

- General Contractors
- Site Supervisors
- Inspectors
- Home Builders
- Developers
- Homeowners

Storm Drain Pollution from Construction Activities

Construction sites are common sources of storm water pollution. Materials and wastes that blow or wash into a storm drain, gutter, or street have a direct impact on local creeks and the Bay.

As a contractor, or site supervisor, owner or operator of a site, you may be responsible for any environmental damage caused by your subcontractors or employees.

Doing the Job Right
General Principles

- ❑ Keep an orderly site and ensure good housekeeping practices are used.
- ❑ Maintain equipment properly.
- ❑ Cover materials when they are not in use.
- ❑ Keep materials away from streets, storm drains and drainage channels.
- ❑ Ensure dust control water doesn't leave site or discharge to storm drains.

Advance Planning To Prevent Pollution

- ❑ Schedule excavation and grading activities for dry weather periods. To reduce soil erosion, plant temporary vegetation or place other erosion controls before rain begins. Use the Erosion and Sediment Control Field Manual , available form the Regional Water Quality Control Board San Francisco Bay Region, as a reference.
- ❑ Control the amount of runoff crossing your site (especially during excavation!) by using berms or temporary or permanent drainage ditches to divert water flow around the site. Reduce stormwater runoff velocities by constructing temporary check dams or berms where appropriate.
- ❑ Train your employees and subcontractors. Make these brochures available to everyone who works on the construction site. Inform subcontractors about the stormwater requirements and their own responsibilities.

Good Housekeeping Practices

- ❑ Designate one area of the site for auto parking, vehicle refueling, and routine equipment maintenance. The designated area should be well away from streams or storm drain inlets, bermed if necessary. Make major repairs off site.
- ❑ Keep materials out of the rain – prevent runoff contamination at the source. Cover exposed piles of soil or construction materials with plastic sheeting or temporary roofs. Before it rains, sweep and remove materials from surfaces that drain to storm drains, creeks, or channels.
- ❑ Keep pollutants off exposed surfaces. Place trash cans and recycling receptacles around the site to minimize litter.
- ❑ Clean up leaks, drips and other spills immediately so they do not contaminate soil or groundwater or leave residue on paved surfaces.
- ❑ Never hose down "dirty" pavement or surfaces where materials have spilled.
- ❑ Use dry cleanup methods whenever possible. If you must use water, use just enough to keep the dust down.
- ❑ Cover and maintain dumpsters. Check frequently for leaks. Place dumpsters under roofs or cover with tarps or plastic sheeting secured around the outside of the dumpster. Never clean out a dumpster by hosing it down on the construction site.
- ❑ Place portable toilets away from storm drains. Make sure portable toilets are in good working order. Check frequently for leaks .

Materials/Waste Handling

- ❑ Practice Source Reduction -- minimize waste when you order materials. Order only the amount you need to finish the job.
- ❑ Use recyclable materials whenever possible. Arrange for pick-up of recyclable materials such as concrete, asphalt, scrap metal, solvents, degreasers, cleared vegetation, paper, rock, and vehicle maintenance materials such as used oil, antifreeze, batteries, and tires.
- ❑ Dispose of all wastes properly. Many construction materials and wastes, including solvents, water-based paints, vehicle fluids, broken asphalt and concrete, wood, and cleared vegetation can be recycled.
  Materials that cannot be recycled must be taken to an appropriate landfill or disposed of as hazardous waste.
  Never bury waste materials or leave them in the street or near a creek or stream bed.

Permits

- ❑ In addition to local grading and building permits, you will need to obtain coverage under the State's General Construction Activity Stormwater Permit if your construction site's disturbed area totals 1 acre or more. Information on the General Permit can be obtained from the Regional Water Quality Control Board.

Earth-Moving and Dewatering Activities

Who should use this information?

- Bulldozer, Back Hoe, and Grading Machine Operators
- Dump Truck Drivers
- Site Supervisors
- General Contractors
- Home Builders
- Developers

Storm Drain Pollution from Earth-Moving Activities

Soil excavation and grading operations loosen large amounts of soil that can flow or blow into storm drains when handled improperly. Sediments in runoff can clog storm drains, smother aquatic life, and destroy habitats in creeks and the Bay. Effective erosion control practices reduce the amount of runoff crossing a site and slow the flow with check dams or roughened ground surfaces.

Contaminated groundwater is a common problem in the Santa Clara Valley. Depending on soil types and site history, groundwater pumped from construction sites may be contaminated with toxics (such as oil or solvents) or laden with sediments. Any of these pollutants can harm wildlife in creeks or the Bay, or interfere with wastewater treatment plant operation. Discharging sediment-laden water from a dewatering site into any water of the state without treatment is prohibited.

Doing the Job Right
General Business Practices

- ❑ Schedule excavation and grading work during dry weather.
- ❑ Perform major equipment repairs away from the job site.
- ❑ When refueling or vehicle/equipment maintenance must be done on site, designate a location away from storm drains.
- ❑ Do not use diesel oil to lubricate equipment parts, or clean equipment.

Practices During Construction

- ❑ Remove existing vegetation only when absolutely necessary. Plant temporary vegetation for erosion control on slopes or where construction is not immediately planned.
- ❑ Protect downslope drainage courses, streams, and storm drains with wattles, or temporary drainage swales. Use check dams or ditches to divert runoff around excavations. Refer to the Regional Water Quality Control Board's Erosion and Sediment Control Field Manua l for proper erosion and sediment control measures, and California Stormwater Quality Association Stormwater Best Management Practice Handbook (construction, 2003)
- ❑ Cover stockpiles and excavated soil with secured tarps or plastic sheeting.

Dewatering Operations
Check for Toxic Pollutants

- ❑ Check for odors, discoloration, or an oily sheen on groundwater.
- ❑ Call your local wastewater treatment agency and ask whether the groundwater must be tested.
- ❑ If contamination is suspected, have the water tested by a certified laboratory.
- ❑ Depending on the test results, you may be allowed to discharge pumped groundwater to the storm drain (if no sediments present) or sanitary sewer. OR, you may be required to collect and haul pumped groundwater offsite for treatment and disposal at an appropriate treatment facility.

Check for Sediment Levels

- ❑ If the water is clear, the pumping time is less than 24 hours, and the flow rate is less than 20 gallons per minute, you may pump water to the street or storm drain.
- ❑ If the pumping time is more than 24 hours and the flow rate greater than 20 gpm, call your local wastewater treatment plant for guidance.
- ❑ If the water is not clear, solids must be filtered or settled out by pumping to a settling tank prior to discharge. Options for filtering include:
  - Pumping through a perforate pipe sunk part way into a small pit filled with gravel;
  - Pumping from a bucket placed below water level using a submersible pump;
  - Pumping through a filtering device such as a swimming pool filter or filter fabric wrapped around end of suction pipe.
- ❑ When discharging to a storm drain, protect the inlet using a barrier of burlap bags filled with drain rock, or cover inlet with filter fabric anchored under the grate, OR pump water through a grassy swale prior to discharge.

Detecting Contaminated Soil or Groundwater

Contaminated groundwater is a common problem in the Santa Clara Valley. It is essential that all contractors and subcontractors involved know what to look for in detecting contaminated soil or groundwater, and testing ponded groundwater before pumping. Watch for any of these conditions:

1. Unusual soil conditions, discoloration or odor.
2. Abandoned underground tanks.
3. Abandoned wells.
4. Buried barrels, debris or trash.

If any of these are found follow the procedures below.

Landscaping,Gardening, And Pool Maintenance

Who should use this information?

- Landscapers
- Gardeners
- Swimming Pool/Spa Service and Repair Workers
- General Contractors
- Home Builders
- Developers
- Homeowners

Storm Drain Pollution from Landscaping and Swimming Pool Maintenance

Many landscaping activities expose soils and increase the likelihood that earth and garden chemicals will run off into the storm drains during irrigation or when it rains. Swimming pool water containing chlorine and copper-based algaecides should never be discharged to storm drains. These chemicals are toxic to aquatic life.

Doing the Job Right
General Business Practices

- ❑ Protect stockpiles (e.g., asphalt, sand, or soil) and landscaping materials from wind and rain by storing them under tarps or secured plastic sheeting.
- ❑ Store pesticides, fertilizers, and other chemicals indoors or in a shed or storage cabinet.
- ❑ Schedule grading and excavation projects during dry weather.
- ❑ Use temporary check dams or ditches to divert runoff away from storm drains.
- ❑ Protect storm drains with sandbags or other sediment controls.
- ❑ Revegetation is an excellent form of erosion control for any site. Replant as soon as possible with temporary vegetation such as grass seed.

Landscaping/Garden Maintenance

- ❑ Consider using Integrated Pest Management Techniques. Use pesticides sparingly, according to instructions on the label. Rinse empty containers, and use rinsewater as product. Dispose of rinsed, empty containers in the trash.
- ❑ Dispose of unused pesticides as hazardous waste.
- ❑ Collect lawn and garden clippings, pruning waste, and tree trimmings. Chip if necessary, and compost if possible.
- ❑ Do not blow or rake leaves, etc. into the street; or place yard waste in gutters or on dirt shoulders. Sweep up any leaves, litter or residue in gutters or on street.

Pool/Fountain/Spa Maintenance
Draining pools or spas

- ❑ When it's time to drain a pool, spa, or fountain, please be sure to call your local wastewater treatment plant before you start for further guidance on flow rate restrictions, backflow prevention, and handling special cleaning waste (such as acid wash). Discharge flows should be kept to the low levels typically possible through a garden hose. Higher flow rates may be prohibited by local ordinance.
- ❑ Never discharge pool or spa water to a street or storm drain; discharge to a sanitary sewer cleanout.
- ❑ If possible, when emptying a pool or spa, let chlorine dissipate for a few days and then recycle/ reuse water by draining it gradually onto a landscaped area. OR
- ❑ San Jose/Santa Clara Water Pollution Control Plant (408) 945-5300. You may be able to discharge to the sanitary sewer by running the hose to a utility sink or sewer pipe clean-out.
- ❑ Do not use copper-based algaecides Control algae with chlorine or other alternatives, such as sodium bromide.

Filter Cleaning

- ❑ Never clean a filter in the street or near a storm drain. Rinse cartridge and diatomaceous earth filters onto a dirt area, and spade filter residue into soil. Dispose of spent diatomaceous earth in the garbage.
- ❑ If there is no suitable dirt call San Jose/Santa Clara Water Pollution Control Plant (408) 945-5300 for instructions on discharging filter backwash or rinse water to the sanitary sewer.

Roadwork and Paving

Who should use this information?

- Road Crews
- Driveway/Sidewalk/Parking Lot Construction Crews
- Seal Coat Contractors
- Operators of Grading Equipment, Paving Machines, Dump Trucks, Concrete Mixers
- Construction Inspectors
- General Contractors
- Developers
- Home Builders

Storm Drain Pollution from Roadwork

Road paving, surfacing, and pavement removal happen right in the street, where there are numerous opportunities for pollution. Sawcut slurry, or excavated material to illegally enter storm drains. Extra planning is required to store and dispose of materials properly and guard against pollution of storm drains, creeks, and the Bay.

Doing the Job Right
General Business Practices

- ❑ Develop and implement erosion/sediment control plans for roadway embankments.
- ❑ Schedule excavation and grading work during dry weather.
- ❑ Check for and repair leaking equipment.
- ❑ Perform major equipment repairs at designated areas in your maintenance yard, where cleanup is easier. Avoid performing equipment repairs at construction sites.
- ❑ When refueling or when vehicle/equipment maintenance must be done on site, designate a location away from storm drains and creeks.
- ❑ Do not use diesel oil to lubricate equipment parts or clean equipment.
- ❑ Recycle used oil, concrete, broken asphalt, etc. whenever possible, or dispose of properly.

During Construction

- ❑ Avoid paving and seal coating in wet weather, or when rain is forecast, to prevent fresh materials from contacting stormwater runoff.
- ❑ Cover and seal catch basins and manholes when applying seal coat, slurry seal, fog seal, or similar materials.
- ❑ Protect drainage ways by using earth dikes, sand bags, or other controls to divert or trap and filter runoff.
- ❑ Never wash excess material fr om exposed aggregate concrete or similar treatments into a street or storm drain. Collect and recycle, or dispose to dirt area.
- ❑ Cover stockpiles (asphalt, sand, etc.) and other construc on materials with plastic tarps. Protect from rainfall and prevent runoff with temporary roofs or plastic sheets and berms.
- ❑ Park paving machines over drip pans or absorbent material (cloth, rags, etc.) to catch drips when not in use.
- ❑ Clean up all spills and leaks using "dry" methods (with absorbent materials and/or rags) Dig up, remove, and properly dispose of contaminated soil.
- ❑ Collect and recycle or appropriately dispose of excess abrasive gravel or sand.
- ❑ Avoid over-application by water trucks for dust control.

Asphalt/Concrete Removal

- ❑ Avoid creating excess dust when breaking asphalt or concrete.
- ❑ After breaking up old pave ment, be sure to remove all chunks and pieces. Make sure broken pavement does not come in contact with rainfall or runoff.
- ❑ When making saw cuts, use as little water as possible. Shovel or vacuum saw-cut slurry and remove from the site. Cover or protect storm drain inlets during saw-cutting. Sweep up, and properly dispose of, all residues.
- ❑ Sweep, never hose down streets to clean up tracked dirt. Use a street sweeper or vacuum truck. Do not dump vacuumed liquor in storm drains.

Painting and Application of Solvents and Adhesives

Who should use this information?

- Painters
- Paperhangers
- Plasterers
- Graphic Artists
- Dry Wall Crews
- Floor Covering Installers
- General Contractors
- Home Builders
- Developers
- Homeowners

Storm Drain Pollution from Paints, Solvents, and Adhesives

All paints, solvents, and adhesives contain chemicals that are ha rmful to wildlife in local creeks, San Francisco Bay, and the Pacific Ocean. Toxic chemicals may come from liquid or solid products or from cleaning residues or rags. Paint material and wastes, adhesives and cleaning fluids should be recycled when possible, or disposed of properly to prevent these materials from flowing into storm drains and watercourses.

Doing the Job Right
Handling Paint Products

- ❑ Keep all liquid paint products and wastes away from the gutter, street, and storm drains. Liquid residues from paints, thinners, solvents, glues, and cleaning fluids are hazardous wastes and must be disposed of as hazardous.
- ❑ Wash water from painted buildings constructed before 1978 can contain high amounts of lead, even if paint chips are not present. Before you begin stripping paint or cleaning pre-1978 building exteriors with water under high pressure, test paint for lead by taking paint scrapings to a local laboratory. See Yellow Pages for a state-certified laboratory.
- ❑ If there is loose paint on the building, or if the paint tests positive for lead, block storm drains. Check with the wastewater treatment plant to determine whether you may discharge water to the sanitary sewer, or if you must send it offsite for disposal as hazardous waste.

Paint Removal

- ❑ Paint chips and dust from non-hazardous dry stripping and sand blasting may be swept up or collected in plastic drop cloths and disposed of as trash.
- ❑ Chemical paint stripping residue and chips and dust from marine paints or paints containing lead, mercury or tributyl tin must be disposed of as hazardous wastes. Lead based paint removal requires a state-certified contractor.
- ❑ When stripping or cleaning building exteriors with high-pressure water, block storm drains. Direct wash water onto a dirt area to find out if you can collect (mop or vacuum) building cleaning water and dispose to the sanitary sewer. Sampling of the water may be required to assist the wastewater treatment authority in making its decision.

Painting Cleanup

- ❑ Never clean brushes or rinse paint containers into a street, gutter, storm drain, French drain, or stream.
- ❑ For water-based paints, paint out brushes to the extent possible, and rinse into a drain that goes to the sanitary sewer. Never pour paint down a storm drain. Dispose of excess liquids and residue as hazardous waste.
- ❑ For oil-based paints, paint out brushes to the extent possible and clean with thinner or solvent in a proper container. Filter and reuse thinners and solvents. Dispose of excess liquids and residue as hazardous waste.
- ❑ When thoroughly dry, empty paint cans, used brushes, rags, and drop cloths may be disposed of as garbage in a sanitary landfill. Leave lids off paint cans so the refuse collector can see that they are empty. Empty, dry paint cans also may be recycled as metal.
- ❑ Dispose of empty aerosol paint cans as hazardous waste or at household hazardous waste collection events.

Recycle/Reuse Leftover Paints Whenever Possible

- ❑ Donate excess water-based (latex) paint for reuse.
- ❑ Reuse leftover oil-based paint. Dispose of non-recyclable thinners, sludge and unwanted paint, as hazardous waste.
- ❑ Unopened cans of paint may be able to be returned to the paint vendor. Check with the vendor regarding its "buy-back" policy.

Milpitas Municipal Code (MMC) 2014

XI-16-11 Accidental Discharge - Notification of Discharge

(a) All persons shall notify the City by telephone immediately by dialing 911 upon accidentally discharging any material other than an acceptable discharge into a storm drain or watercourse to enable countermeasures to be taken by the City to minimize damage to storm drains and the receiving waters. Prohibited discharges include but are not limited to:
(1) Sewage;
(2) Discharges of wash water resulting from the cleaning of exterior surfaces and pavement, or the equipment and other facilities of any commercial business, or any other public or private facility;
(3) Discharges of runoff from material storage areas, including containing chemicals, fuels, or other potentially polluting or hazardous materials;
(4) Discharges of pool or fountain water containing chlorine, biocides, or other chemicals; discharges of pool or fountain filter backwash water;
(5) Discharges of sediment, pet waste, vegetation clippings, or other landscape or construction-related wastes; and
(6) Discharges of food-related wastes (e.g., grease, fish processing, and restaurant kitchen mat and trash bin wash water, etc.).
The City, at its sole option, may direct the person or persons responsible for the discharge to perform cleanup activities when it is deemed by the City that the person or persons have the capability to perform such activities. All violations shall be corrected in a timely manner before the next rain event, but no longer than ten (10) business days after the violations are discovered.
(b) The person deemed by the City responsible for the discharge shall, within five (5) days of the date of occurrence, provide a detailed written statement to the City Manager or his or her designee describing the causes of the accidental discharge and the measures being taken to prevent future occurrences. Such notification will not relieve persons of liability for violations of this Chapter or for any fines imposed on the City on account thereof under Section 13350 of the California Water Code, or for violation of Section 5650 of the California Fish and Wildlife Code, or any other applicable provisions of State or federal law.
(c) Persons deemed by the City responsible for the discharge are responsible for all expenses resulting from the discharge, including, but not limited to, damages, fines, and costs of clean-up, whether performed by their own efforts, City efforts, or the efforts of a third party. Reimbursement of City efforts shall be determined by the number of personnel required and amount of time necessary for the coordination of City efforts and actual clean-up. All personnel costs shall be charged at their current fully burdened rate, including overtime, plus any and all other direct costs.

XI-16-14 Enforcement and Penalties

(a) Criminal Penalties. Violations of the provisions of this Chapter shall be subject to criminal penalties as provided in Section 1-1-4.09-1 of this Code.

(b) Judicial Civil Penalties. Any person who intentionally or negligently violates any provision of this Chapter or any provision of any permit or certificate issued pursuant to this Chapter shall be civilly liable to the city in a sum not to exceed twenty-five thousand dollars per day for each day in which such violation occurs.

(c) Administrative Citations. When the City Manager and/or his or her designee determines that one or more violations of this Chapter have occurred an administrative citation may be issued pursuant tc the procedures set forth in Sections V-500-8.00 through V-500-8.06. The schedule of fines for administrative citations issued for violations of this Chapter shall be set forth in the schedule of fines established by resolution of the City Council.

(d) Notice of Noncompliance. If the severity of the violation warrants immediate action, a Notice of Noncompliance or Stop Work Notice shall be issued, permits may be suspended or revoked, Stormwater Pollution Prevention Plans may be found in noncompliance, and corrective actions may be implemented in accordance with Section 11 of this Chapter. For all other cases, including those sites or projects where a stormwater pollution prevention plan is not required, the City Manager or his or her designee shall issue a Notice of Noncompliance that shall enumerate the violations found. The City Manager or his or her designee shall order compliance by a date or hour certain at his or her discretion. If the violations are not abated in the time period identified in the Notice of Noncompliance, the site shall be deemed to be in noncompliance with federal, State and local laws and the City Manager or his or her designee shall have the authority to issue a Stop Work Notice and/or deem the Stormwater Pollution Prevention Plan inadequate. If a Stop Work Notice is issued, corrective actions must be performed until the site has achieved compliance. Corrective actions may include revision and resubmission of any Plan, including, but not limited to, Stormwater Pollution Prevention Plan, Erosion Control Plan or Grading Plan. The City Manager or his or her designee may also require a discharger that has violated any discharge limits contained in this Chapter to install a temporary system for the capture, testing, and release of stormwater.

(e) Suspension of Utility Service. The City may, without prior notice, suspend water service, sanitary sewer service, and/or storm drain discharge access to a person discharging to the storm drain system when such suspension is necessary to stop an actual or threatened discharge which presents, or may present, imminent and substantial danger to the environment or to the health or welfare of persons; or presents, or may present, imminent and substantial danger to the storm drain system.

(f) For construction projects where a total of three or more Stop Work Notices and Notices of Noncompliance for urban runoff violations have been issued, the City Manager or his or her designee may require the contractor to hire a Qualified SWPPP Developer (QSD) or Qualified SWPPP Practitioner (QSP) within three business days. The QSD/QSP shall establish effective BMPs, provide guidance for improvement for the duration of the project, and certify compliance. A Stop Work Notice shall be issued for failure to comply.

(g) Remedies Cumulative. The remedies provided in this section are cumulative and not exclusive, and shall be in addition to any other penalty provided for in this Chapter and shall be in addition to all other remedies available to the City under State and federal law.

BIGGS CARDOSA ASSOCIATES INC
STRUCTURAL ENGINEERS
865 The Alameda
San Jose, California 95126
408-296-5515

BCA

RJA
RUGGERI-JENSEN-AZAR
ENGINEERS ▪ PLANNERS ▪ SURVEYORS
8055 CAMINO ARROYO GILROY, CA 95020
PHONE: (408) 848-0300 FAX: (408) 848-0302

Designer Stamp:

LICENSED PROFESSIONAL ENGINEER
LUIS SANTIAGO-OTERO
C79665
EXP. ____
CIVIL
STATE OF CALIFORNIA

Record Drawings

Designer: _____ Date: _____
Public Works Inspector: _____ Date: _____
Utility/Facility Dept. Head: _____ Date: _____
Project Engineer: _____ Date: _____
Public Improvements Initially Accepted by the City Council on: _____ Res. No. _____

Drawn By: RJA Date: 1/29/19
Checked By: RJA Date: 1/29/19
Designed By: RJA Date: 1/29/19

Revisions

Num.	Description	Engr. Aprv.	Date

NOT FOR CONSTRUCTION
100% SUBMITTAL
NOVEMBER 8, 2019

CITY OF MILPITAS
CALIFORNIA
JANUARY 26, 1954

CITY OF MILPITAS
ENGINEERING DIVISION

CENTRE POINTE - PENITENCIA CREEK PEDESTRIAN BRIDGE
ACROSS EAST PENITENCIA CREEK BETWEEN McCANDLESS DRIVE AND MONTAGUE EXPRESSWAY

BEST MANAGEMENT PRACTICES

RECOMMENDED FOR BIDDING BY: _____ DATE: _____
MICHAEL SILVEIRA, PE CIP MANAGER

PROJECT NO. 2005
Rec. Dwg No.
SCALE: NONE
SHEET 8 OF 16

PLOT DATE: November 6, 2019
FILE PATH: W:\Jobs 12\12205\Drawings\Final\Offsite IP - Penitencia Pedestrian Bridge\Improvement Plans\8 BEST MANAGEMENT PRACTICES.dwg

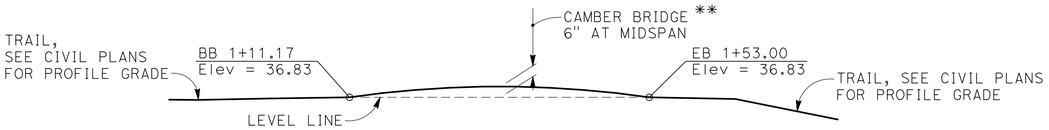

PROFILE GRADE

NO SCALE

** CAMBER SHOWN IS NET AND DOES NOT INCLUDE ADDITIONAL CAMBER REQUIRED TO COMPENSATE FOR DEAD LOAD DEFLECTION

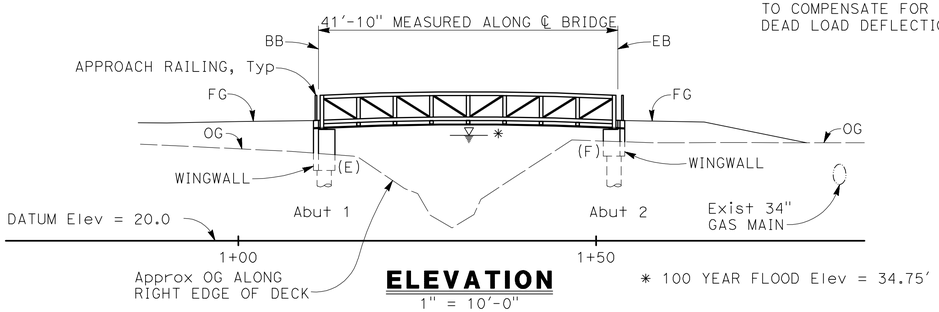

ELEVATION

1" = 10'-0"

* 100 YEAR FLOOD Elev = 34.75'

CIDH PILE DATA TABLE

Location	Pile Type	Design Loading (Service)	Nominal Resistance		Design Tip Elev	Specified Tip Elev
			Compression	Tension		
Abutment 1	30" dia CIDH	45 Kips	85 Kips	0	16.00 (1);11.00 (3)	11.00
Abutment 2	30" dia CIDH	40 Kips	72 Kips	0	18.00 (1);10.00 (3)	10.00
Retaining Wall	24" dia CIDH	18 Kips	35 Kips	0	4.25 (3)	4.25

NOTES:
1. Design tip elevation is controlled by the following demands: (1) Compression; (2) Tension; (3) Lateral Loads
2. The Specified Tip must not be raised.

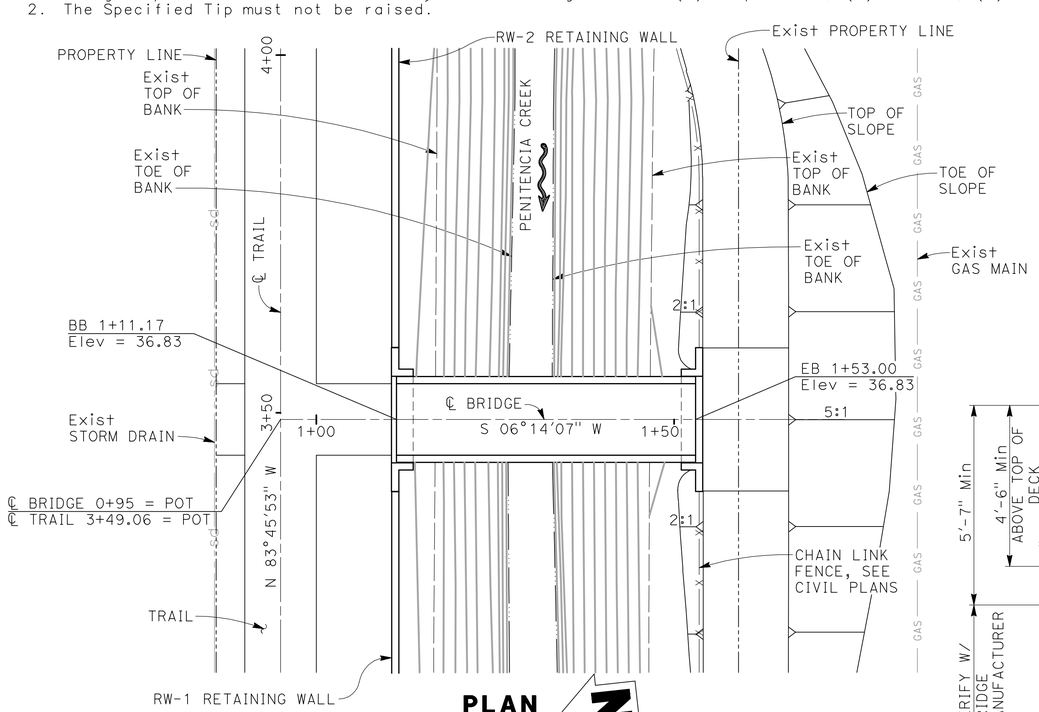

PLAN

1" = 10'-0"

NOTES:
1. See Civil Plans for proposed finished grade contours, retaining wall layout and profile, chain link fence layout, etc.
2. Bridge railings and wall railings shall not allow a sphere 6" or larger to pass through.
3. (E) Indicates bridge superstructure's expansion end.
4. (F) Indicates bridge superstructure's fixed end.
5. Special Inspection is required.
6. Contractor shall coordinate all embedded item locations and bearing plate sizes with Bridge Manufacturer prior to placing abutment diaphragm concrete. Any discrepancies with dimensional requirements shown shall be brought to the attention of the Engineer immediately.
7. Contractor shall field verify bridge length with in-place location of anchor bolts prior to bridge fabrication.
8. See Approach Railing Detail on sheet S-7 for safety rails, steel toe plates and steel rubrails at bridge end posts.
9. Bridge is to be painted.
10. Vertical Datum NAVD88.

HYDROLOGIC SUMMARY

Hydrologic information provided by Schaaf & Wheeler, March 2018

Drainage Area: 1.70 square miles

	DESIGN FLOOD
Frequency (years)	100
Discharge (cubic feet per second)	1174*
Water surface (elevation at bridge)	34.75'
Velocity (feet per second)	5

* Peak Discharge is affected by upstream spills.

Flood plain data are based upon information available when the plans were prepared and are shown to meet federal requirements. The accuracy of said information is not warranted by the City and interested or affected parties should make their own investigation.

INDEX TO PEDESTRIAN BRIDGE PLANS

SHEET No.	TITLE
S1	GENERAL PLAN
S2	ABUTMENT DETAILS No. 1
S3	ABUTMENT DETAILS No. 2
S4	RW-1 RETAINING WALL - PLAN & ELEVATION
S5	RW-2 RETAINING WALL - PLAN & ELEVATION
S6	RETAINING WALL DETAILS
S7	RAILING DETAILS
S8	STRUCTURAL AND GEOTECHNICAL SPECIAL INSPECTION AND TESTING

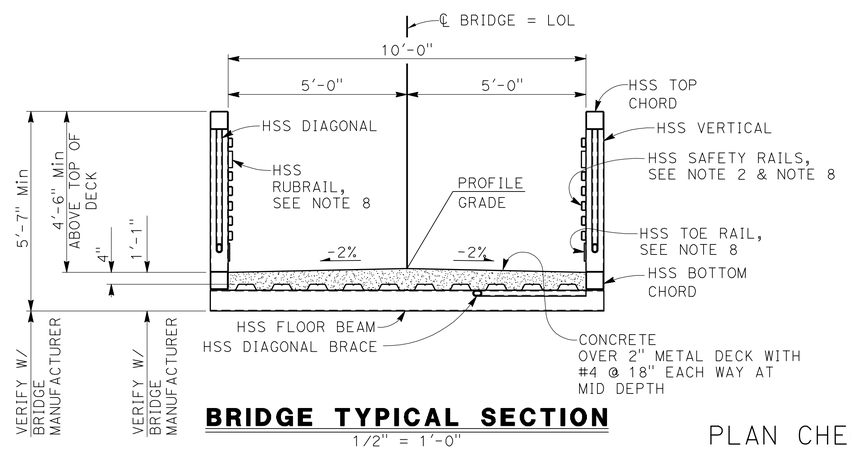

BRIDGE TYPICAL SECTION

1/2" = 1'-0"

GENERAL NOTES - LOAD FACTOR DESIGN

DESIGN:	AASHTO Guide Specifications for Design of Pedestrian Bridges (2009 with 2015 Interim Revisions)
BRIDGE DEAD LOAD:	Total Dead Load for bridge superstructure shall not exceed 40,000 lbs
BRIDGE LIVE LOADING:	One 10,000 lb vehicle load (H5 Truck) or 90 psf pedestrian load
BRIDGE LIVE LOAD DEFLECTION LIMIT:	L/360
BRIDGE SEISMIC LOADING DESIGN:	Caltrans Seismic Design Criteria (SDC) v1.7, April 2013
RETAINING WALL LIVE LOADING:	100 PSF LATERAL LOAD

CALTRANS STANDARD PLANS DATED MAY 2015

A3A	ABBREVIATIONS (SHEET 1 OF 3)
A3B	ABBREVIATIONS (SHEET 2 OF 3)
A3C	ABBREVIATIONS (SHEET 3 OF 3)
A62B	LIMITS OF PAYMENT FOR EXCAVATION AND BACKFILL SURCHARGE AND WALL
A62C	LIMITS OF PAYMENT FOR EXCAVATION AND BACKFILL-BRIDGE
B0-1	BRIDGE DETAILS
B0-3	BRIDGE DETAILS
B2-3	16" AND 24" CAST-IN-DRILLED HOLE CONCRETE PILE
RSP B9-6	STRUCTURE APPROACH DRAINAGE DETAILS
B11-51	TUBULAR HANDRAILING

LOADING: Caltrans SDC (v 1.7, June 2013), Figure B.8, (Mw = 6.9, Soil Profile Type D, PGA = 0.69g) with the following modifications:
1. No change of Sa for structural periods < 0.5 sec
2. 20% increase of Sa for structural periods > 1 sec
3. Linear interpolation for structural periods between 0.5 and 1 sec

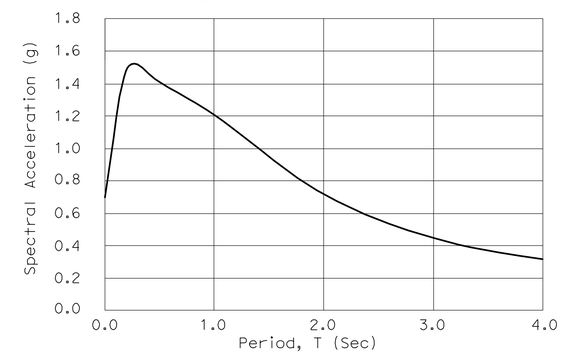

ARS DESIGN CURVE

NO SCALE

REINFORCED CONCRETE:	fy = 60,000 psi (ASTM A706) f'c = 4,000 psi n = 8
PREFABRICATED BRIDGE & PEDESTRIAN RAILING:	fy = 46,000 psi (ASTM A500 GRADE B), OR fy = 50,000 psi (ASTM A500 GRADE C)

LENGEND

1 / S3 — Indicates detail no. / Indicates sheet no. shown on

B0-3 / 3-5 — Indicates Caltrans Standard Plan sheet No. / Indicates detail No.

PLAN CHECK SET/NOT FOR CONSTRUCTION (11/5/19)

BIGGS CARDOSA ASSOCIATES INC
STRUCTURAL ENGINEERS
865 The Alameda
San Jose, California 95126
408-296-5515

Designer Stamp: REGISTERED PROFESSIONAL ENGINEER MARYASH M HARRIS No. 2639 Exp. 12/31/20 STRUCTURAL STATE OF CALIFORNIA

Record Drawings

Designer: MMH Date:
Public Works Inspector: Date:
Utility/Facility Dept. Head: Date:
Project Engineer: JDV Date:
Public Improvements Initially Accepted by the City Council on: Res. No.

Drawn By: RLQ Date: 04/16/18
Checked By: JAA Date: 03/04/19
Designed By: SAR Date: 04/16/18

Revisions

Num.	Description	Engr. Aprv.	Date
△			

CITY OF MILPITAS
ENGINEERING DIVISION

CENTRE POINTE - PENITENCIA CREEK PEDESTRIAN BRIDGE
ACROSS EAST PENITENCIA CREEK BETWEEN McCANDLESS DRIVE AND MONTAGUE EXPRESSWAY

GENERAL PLAN

RECOMMENDED FOR BIDDING BY: _____ DATE: _____

PROJECT NO. 2005
Rec. Dwg No. 2-
SCALE: AS SHOWN
S1
SHEET 9 OF 16

(2017213S1) 2017213

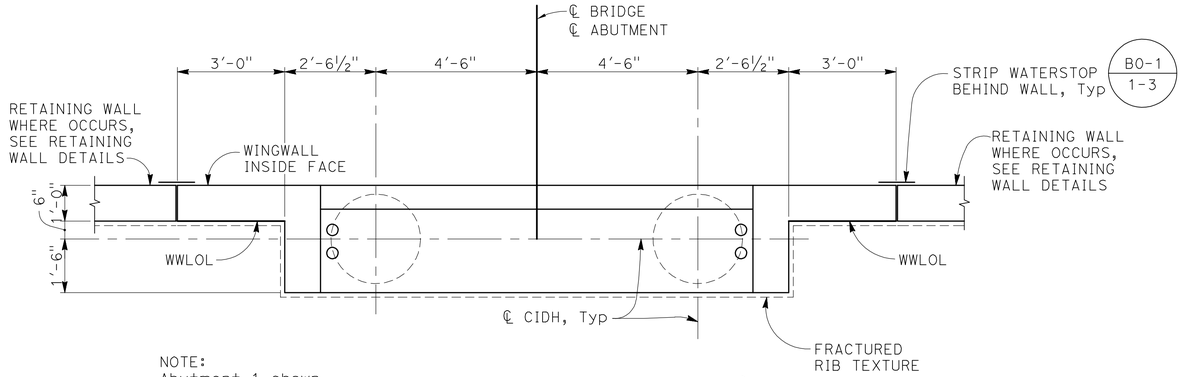

NOTE:
Abutment 1 shown,
Abutment 2 similar

ABUTMENT PLAN
1/2" = 1'-0"

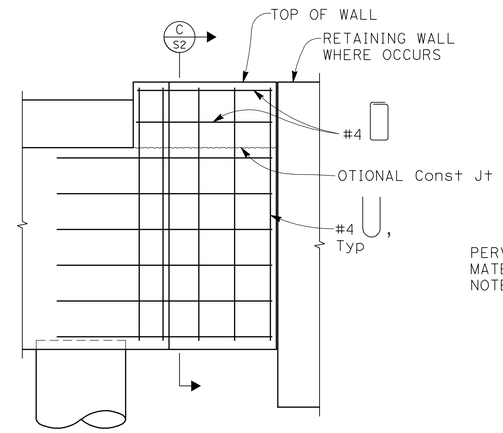

TYPICAL WINGWALL ELEVATION
1/2" = 1'-0"

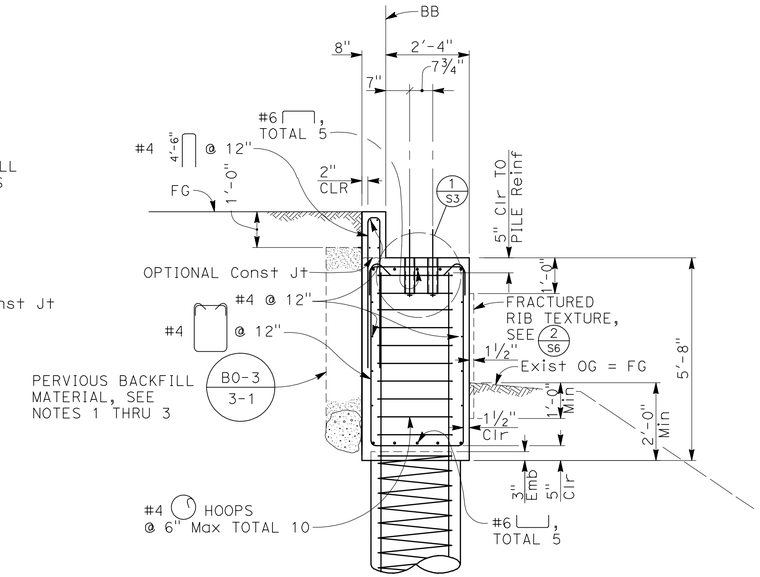

ABUTMENT 1

SECTION A S2
1/2" = 1'-0"

NOTES:

1. Geocomposite drain may be used as an alternative to pervious backfill material. See 4 S6 for details.
2. Backfill material must comply with 2015 Caltrans Standard Specifications Section 19-3.02C.
3. Do not place backfill until concrete has attained a minimum compressive strength of 2,500 psi per 2015 Caltrans Standard Specifications Section 19-3.03E.

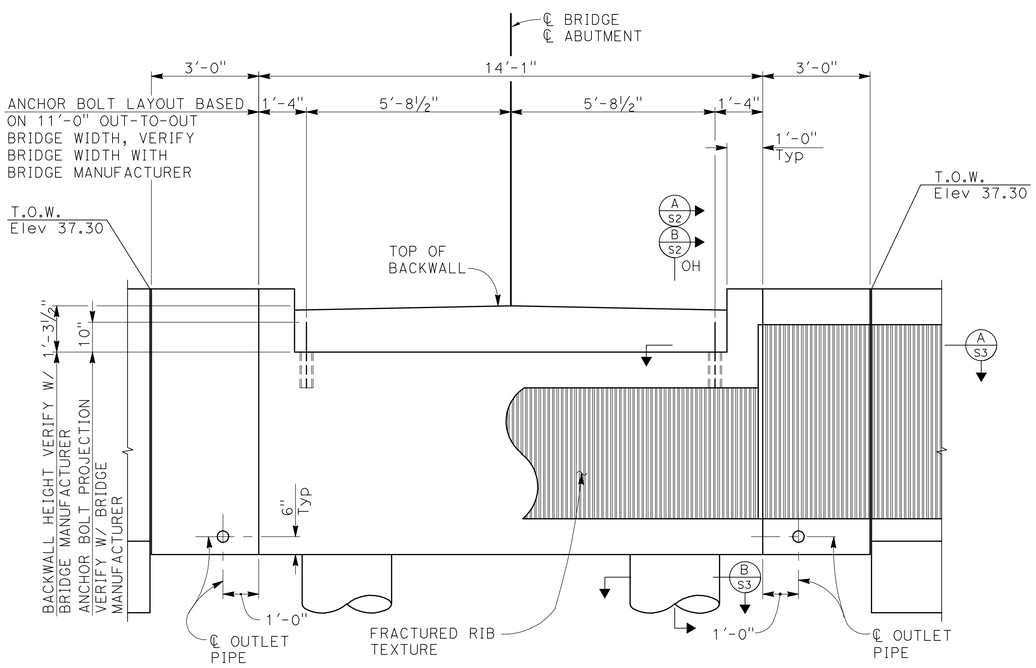

NOTE:
Abutment 1 shown,
Abutment 2 similar

ABUTMENT ELEVATION
1/2" = 1'-0"

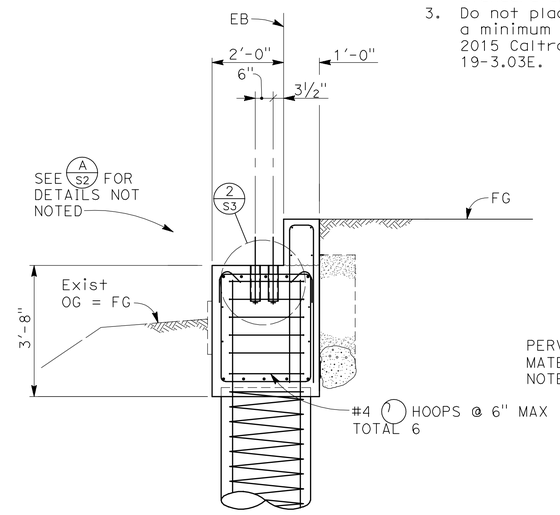

ABUTMENT 2

SECTION B S2
1/2" = 1'-0"

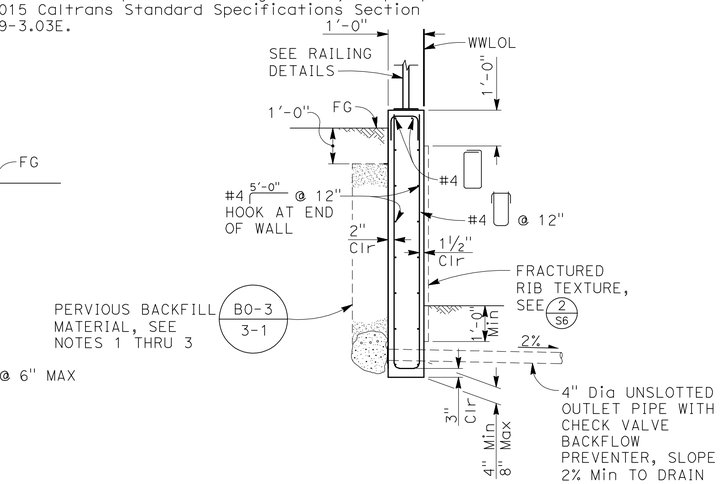

SECTION C S2
1/2" = 1'-0"

PLAN CHECK SET/NOT FOR CONSTRUCTION (11/5/19)

BIGGS CARDOSA ASSOCIATES INC
STRUCTURAL ENGINEERS
865 The Alameda
San Jose, California 95126
408-296-5515

Designer Stamp: REGISTERED PROFESSIONAL ENGINEER MAHVASH M HAGHAD No. 2639 Exp. 12/31/20 STRUCTURAL STATE OF CALIFORNIA

Record Drawings

Designer: MMH Date:
Public Works Inspector: Date:
Utility/Facility Dept. Head: Date:
Project Engineer: JDV Date:
Public Improvements Initially Accepted by the City Council on: Res. No.

Drawn By: RLQ Date: 04/16/18
Checked By: JAA Date: 03/04/19
Designed By: SAR Date: 04/16/18

Revisions

Num.	Description	Engr. Aprv.	Date
△			

CITY OF MILPITAS
ENGINEERING DIVISION

CENTRE POINTE - PENITENCIA CREEK PEDESTRIAN BRIDGE
ACROSS EAST PENITENCIA CREEK BETWEEN McCANDLESS DRIVE AND MONTAGUE EXPRESSWAY

ABUTMENT DETAILS No. 1

RECOMMENDED FOR BIDDING BY: _____ DATE: _____

PROJECT NO. 2005
Rec. Dwg No. 2-
SCALE: AS SHOWN
S2
SHEET 10 OF 16

(2017213S2) 2017213

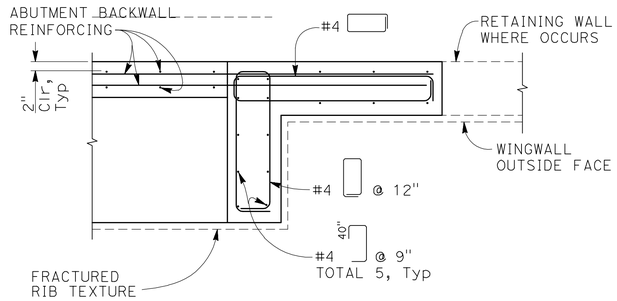

REINFORCING AT ABUTMENT SHEAR KEY

SECTION A/S3
3/4" = 1'-0"

NOTE:
Abutment 1 shown,
Abutment 2 similar

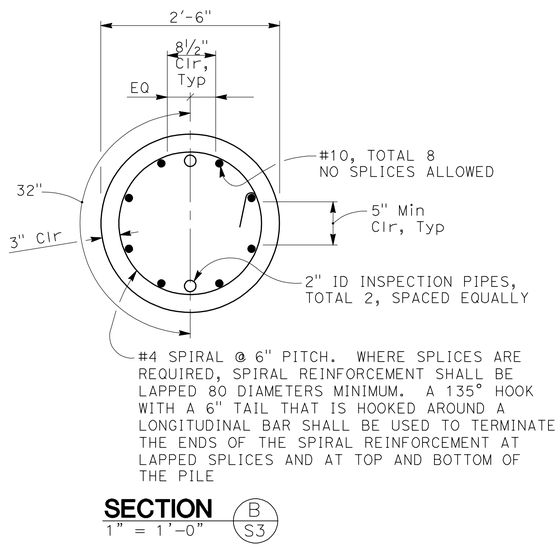

SECTION B/S3
1" = 1'-0"

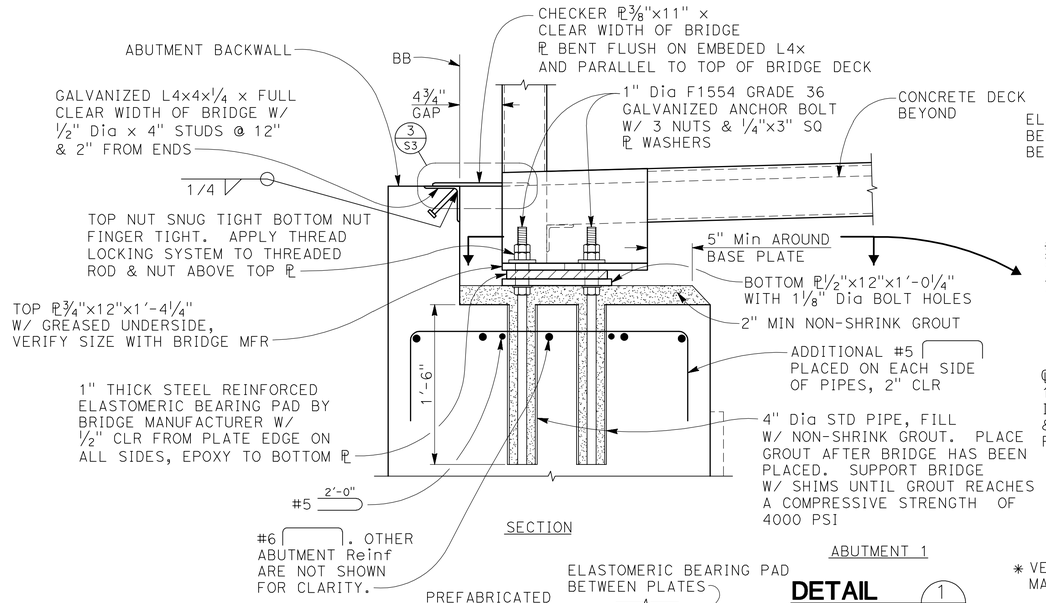

SECTION

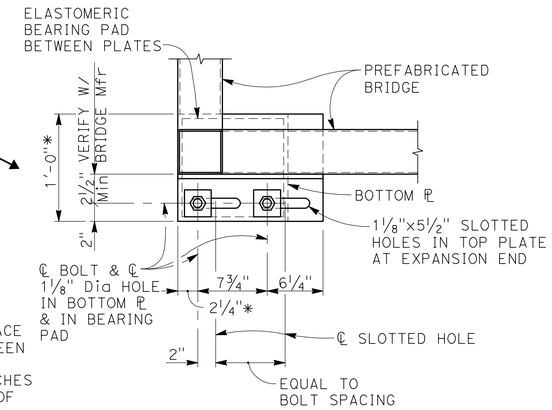

PLAN

ABUTMENT 1

DETAIL 1/S3
1 1/2" = 1'-0"

* VERIFY DIMENSIONS WITH BRIDGE MANUFACTURER

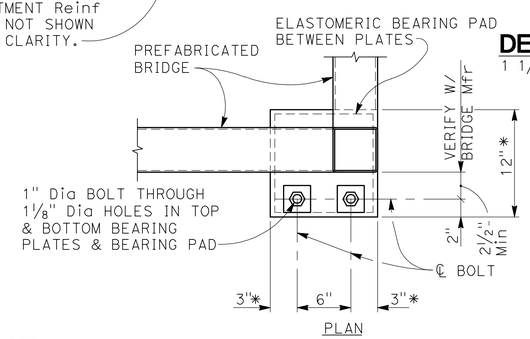

PLAN

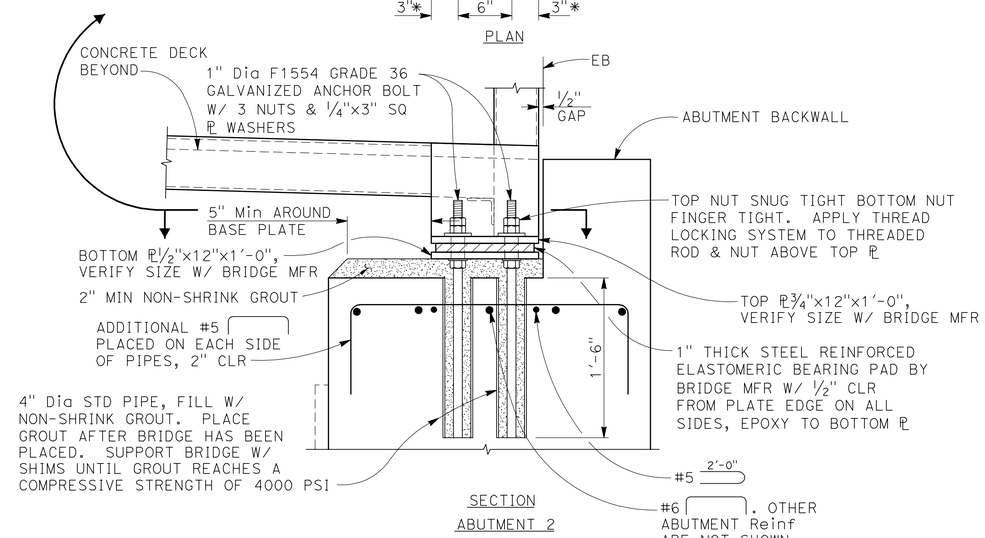

SECTION

ABUTMENT 2

* VERIFY DIMENSIONS WITH BRIDGE MANUFACTURER

DETAIL 2/S3
1 1/2" = 1'-0"

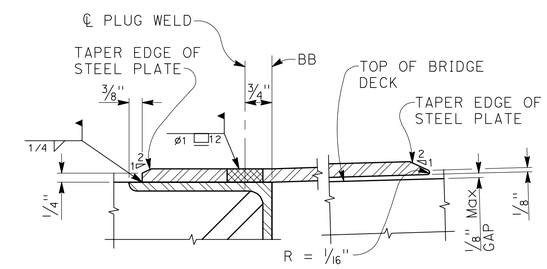

DETAIL 3/S3
NO SCALE

PLAN CHECK SET/NOT FOR CONSTRUCTION (11/5/19)

BIGGS CARDOSA ASSOCIATES INC
STRUCTURAL ENGINEERS
865 The Alameda
San Jose, California 95126
408-296-5515

Designer Stamp: REGISTERED PROFESSIONAL ENGINEER MARWASH M HARRIS No. 2639 Exp. 12/31/20 STRUCTURAL STATE OF CALIFORNIA

Record Drawings
Designer: MMH Date:
Public Works Inspector: Date:
Utility/Facility Dept. Head: Date:
Project Engineer: JDV Date:
Public Improvements Initially Accepted by the City Council on: Res. No.

Drawn By: RLQ Date: 04/16/18
Checked By: JAA Date: 03/04/19
Designed By: SAR Date: 04/16/18

Revisions

Num.	Description	Engr. Aprv.	Date

CITY OF MILPITAS
ENGINEERING DIVISION
CENTRE POINTE - PENITENCIA CREEK PEDESTRIAN BRIDGE
ACROSS EAST PENITENCIA CREEK BETWEEN McCANDLESS DRIVE AND MONTAGUE EXPRESSWAY
ABUTMENT DETAILS No. 2
RECOMMENDED FOR BIDDING BY: DATE:

PROJECT NO. 2005
Rec. Dwg No. 2-
SCALE: AS SHOWN
S3
SHEET 11 OF 16

(2017213S3) 2017213

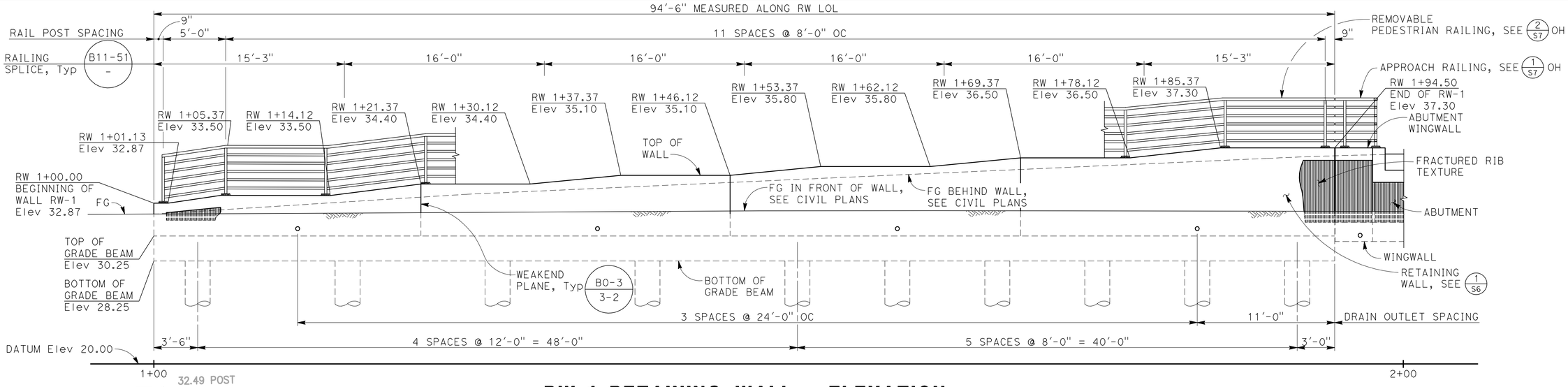

RW-1 RETAINING WALL - ELEVATION

1/4" = 1'-0"

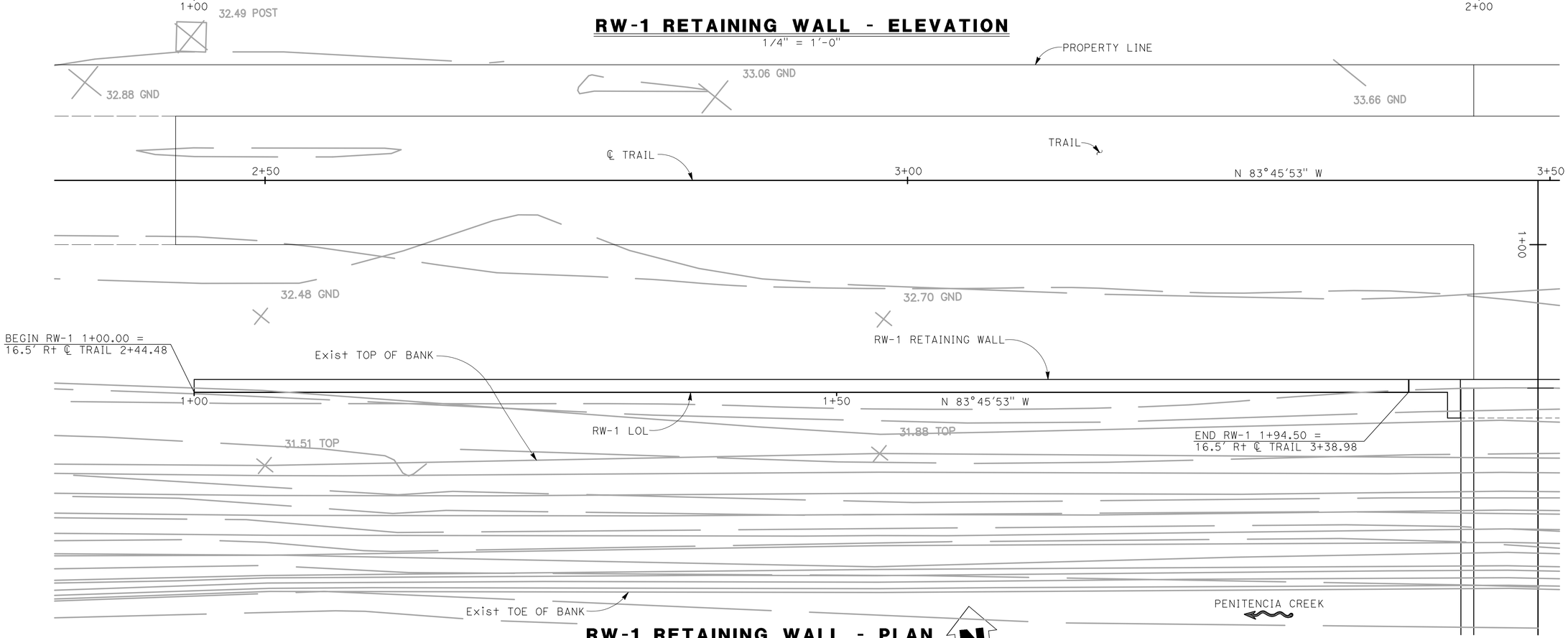

RW-1 RETAINING WALL - PLAN

1/4" = 1'-0"

N

PLAN CHECK SET/NOT FOR CONSTRUCTION (11/5/19)

BIGGS CARDOSA ASSOCIATES INC
STRUCTURAL ENGINEERS

865 The Alameda
San Jose, California 95126
408-296-5515

BCA

Designer Stamp:

REGISTERED PROFESSIONAL ENGINEER
MARYASH M HAKMIS
No. 2639
Exp. 12/31/20
STRUCTURAL
STATE OF CALIFORNIA

Record Drawings

Designer: MMH Date:
Public Works Inspector: Date:
Utility/Facility Dept. Head: Date:
Project Engineer: JDV Date:
Public Improvements Initially Accepted by the City Council on: Res. No.

Drawn By: RLQ Date: 04/16/18
Checked By: JAA Date: 03/04/19
Designed By: SAR Date: 04/16/18

Revisions

Num.	Description	Engr. Aprv.	Date
△			

CITY OF MILPITAS
ENGINEERING DIVISION

CENTRE POINTE - PENITENCIA CREEK PEDESTRIAN BRIDGE
ACROSS EAST PENITENCIA CREEK BETWEEN McCANDLESS DRIVE AND MONTAGUE EXPRESSWAY

RW-1 RETAINING WALL - PLAN & ELEVATION

RECOMMENDED FOR BIDDING BY: _____ DATE: _____

PROJECT NO. 2005
Rec. Dwg No. 2-
SCALE: AS SHOWN
S4
SHEET 12 OF 16

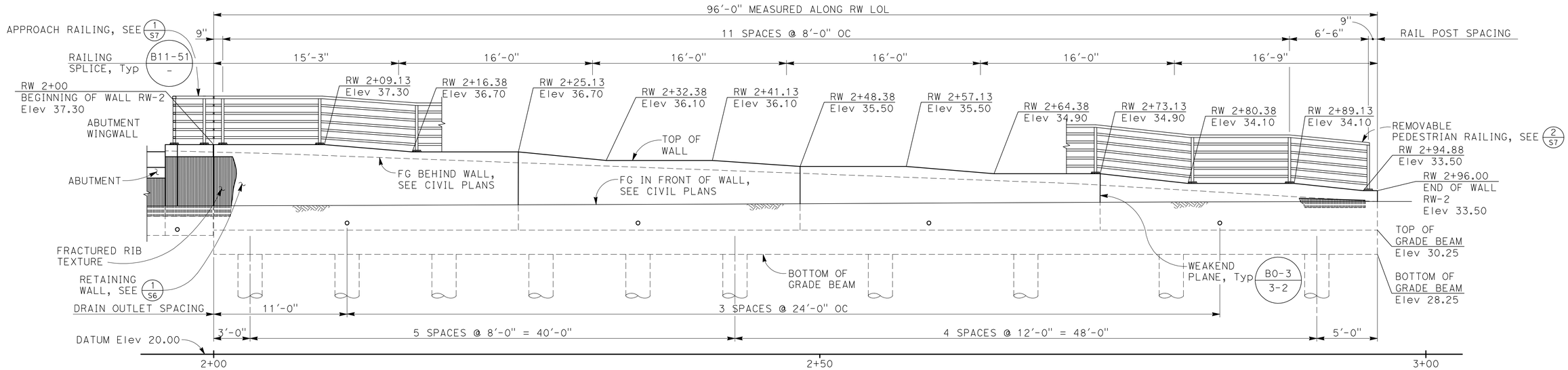

RW-2 RETAINING WALL - ELEVATION

1/4" = 1'-0"

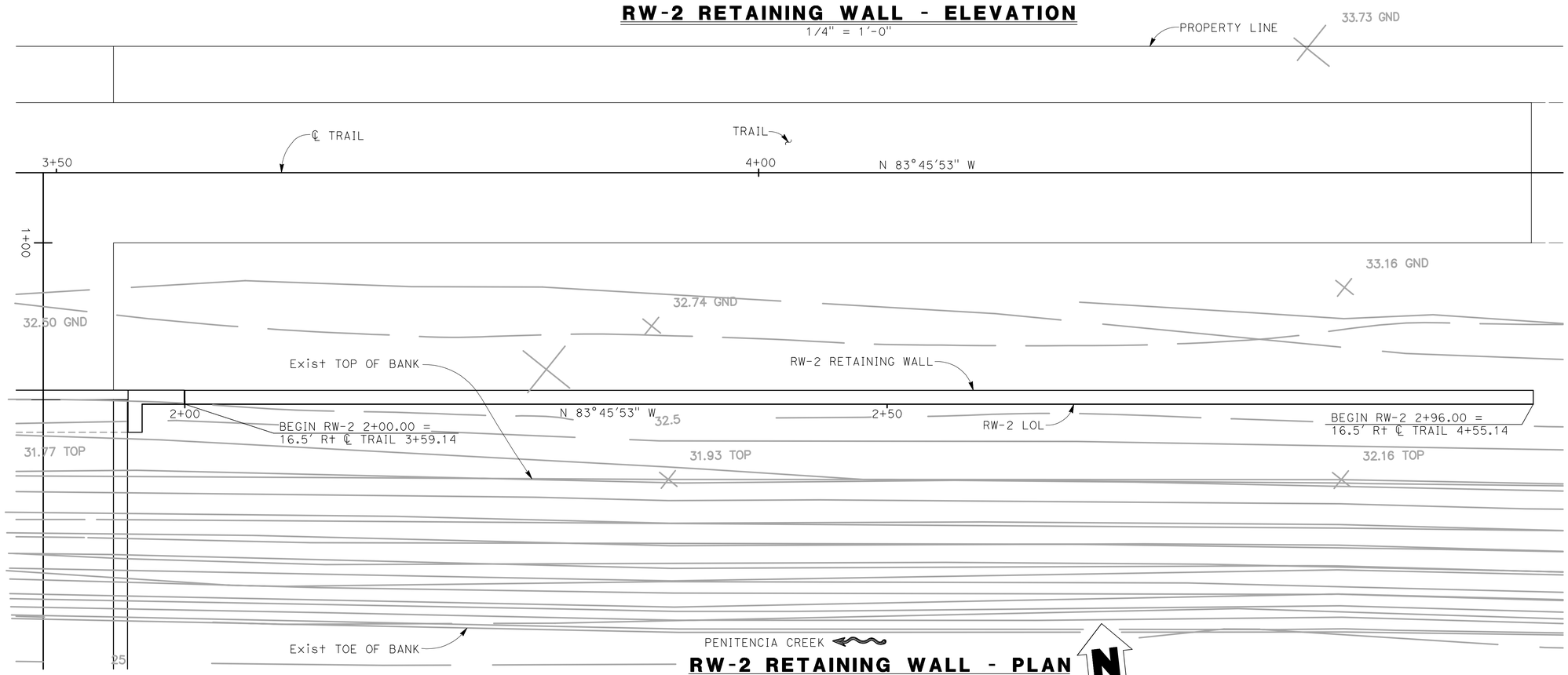

RW-2 RETAINING WALL - PLAN

1/4" = 1'-0"

PLAN CHECK SET/NOT FOR CONSTRUCTION (11/5/19)

BIGGS CARDOSA ASSOCIATES INC
STRUCTURAL ENGINEERS

865 The Alameda
San Jose, California 95126
408-296-5515

Designer Stamp:

REGISTERED PROFESSIONAL ENGINEER
MAHVASH M HARRIS
No. 2639
Exp. 12/31/20
STATE OF CALIFORNIA STRUCTURAL

Record Drawings

Designer: MMH Date:
Public Works Inspector: Date:
Utility/Facility Dept. Head: Date:
Project Engineer: JDV Date:
Public Improvements Initially Accepted by the City Council on: Res. No.

Drawn By: RLQ Date: 04/16/18
Checked By: JAA Date: 03/04/19
Designed By: SAR Date: 04/16/18

Revisions

Num.	Description	Engr. Aprv.	Date

CITY OF MILPITAS
CALIFORNIA
JANUARY 25, 1954

CITY OF MILPITAS
ENGINEERING DIVISION

CENTRE POINTE - PENITENCIA CREEK PEDESTRIAN BRIDGE
ACROSS EAST PENITENCIA CREEK BETWEEN McCANDLESS DRIVE AND MONTAGUE EXPRESSWAY

RW-2 RETAINING WALL - PLAN & ELEVATION

RECOMMENDED FOR BIDDING BY: _____ DATE: _____

PROJECT NO. 2005
Rec. Dwg No. 2-
SCALE: AS SHOWN
S5
SHEET 13 OF 16

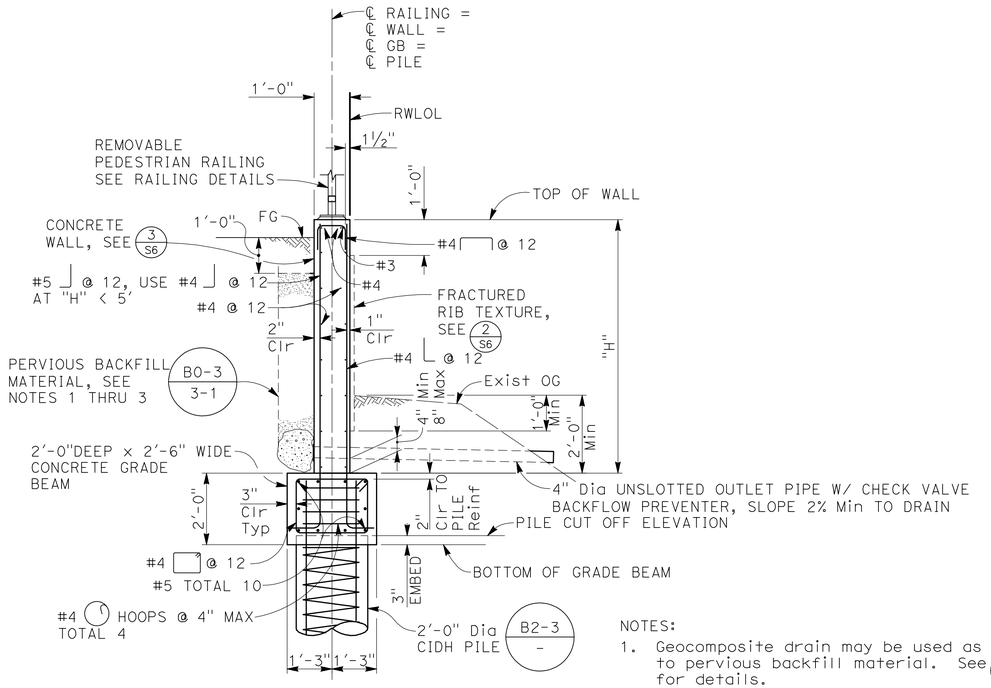

RETAINING WALL DETAIL (1/S6)

1/2" = 1'-0"

NOTES:

1. Geocomposite drain may be used as an alternative to pervious backfill material. See 4/S6 for details.
2. Backfill material must comply with 2015 Caltrans Standard Specifications Section 19-3.02C.
3. Do not place backfill until concrete has attained a minimum compressive strength of 2,500 psi per 2015 Caltrans Standard Specifications Section 19-3.03E.

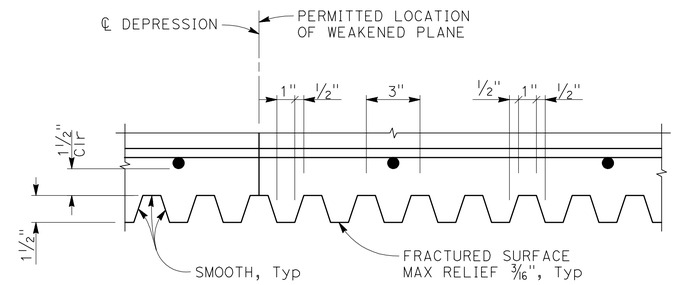

PLAN

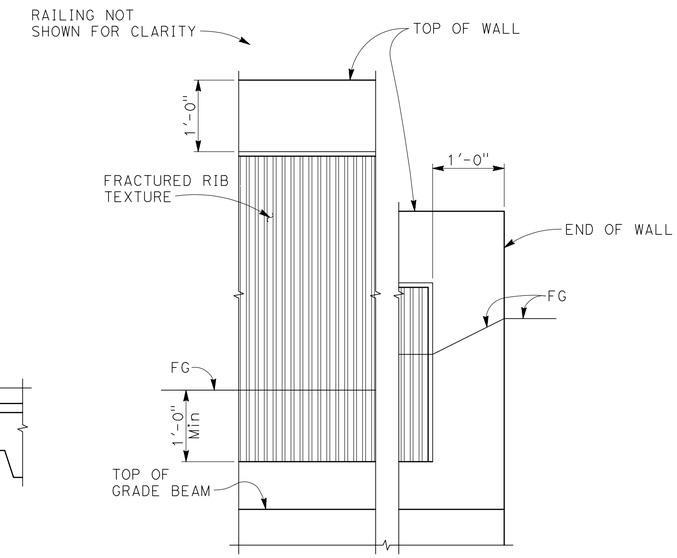

ELEVATION

FRACTURED RIB TEXTURE (2/S6)

1" = 1'-0"

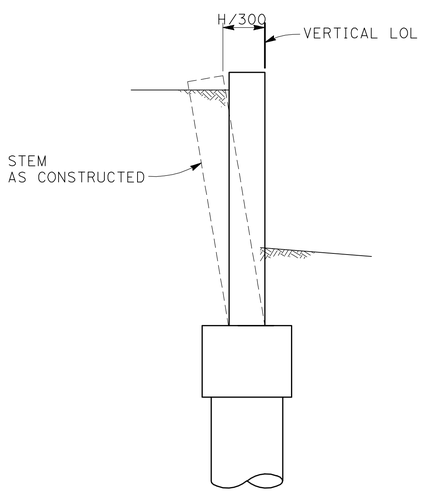

APPROXIMATE WALL OFFSET (3/S6)

NO SCALE

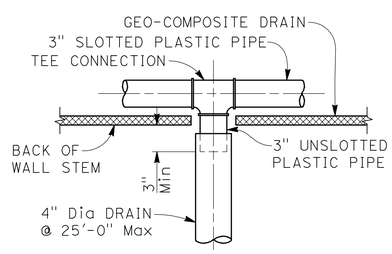

TEE CONNECTION

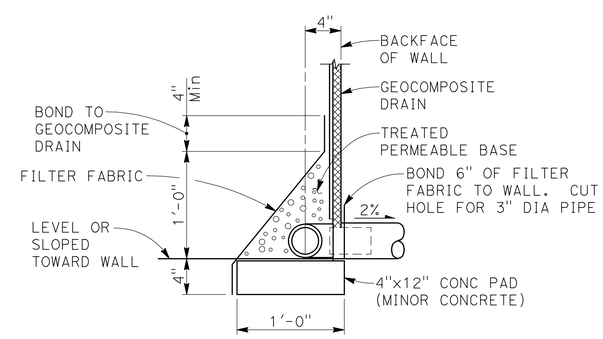

WITHOUT FOOTING

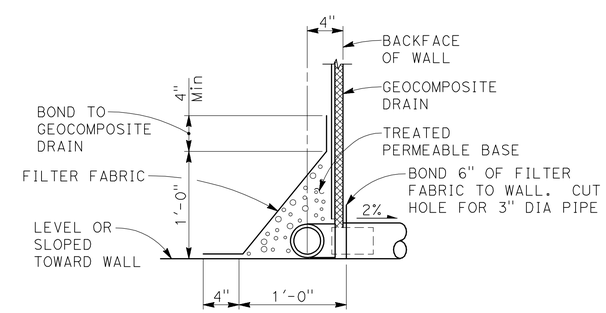

WITH FOOTING

ALTERNATIVE DRAINAGE DETAILS (4/S6)

1 1/2" = 1'-0"

PLAN CHECK SET/NOT FOR CONSTRUCTION (11/5/19)

BIGGS CARDOSA ASSOCIATES INC
STRUCTURAL ENGINEERS

865 The Alameda
San Jose, California 95126
408-296-5515

Designer Stamp: REGISTERED PROFESSIONAL ENGINEER MAHVASH M HAKMAS No. 2639 Exp. 12/31/20 STRUCTURAL STATE OF CALIFORNIA

Record Drawings

Designer: MMH Date:
Public Works Inspector: Date:
Utility/Facility Dept. Head: Date:
Project Engineer: JDV Date:
Public Improvements Initially Accepted by the City Council on: Res. No.

Drawn By: RLQ Date: 04/16/18
Checked By: JAA Date: 03/04/19
Designed By: SAR Date: 04/16/18

Revisions

Num.	Description	Engr. Aprv.	Date
△			

CITY OF MILPITAS
ENGINEERING DIVISION

CENTRE POINTE - PENITENCIA CREEK PEDESTRIAN BRIDGE
ACROSS EAST PENITENCIA CREEK BETWEEN McCANDLESS DRIVE AND MONTAGUE EXPRESSWAY

RETAINING WALL DETAILS

RECOMMENDED FOR BIDDING BY: DATE:

PROJECT NO. 2005
Rec. Dwg No. 2-
SCALE: AS SHOWN
S6
SHEET 14 OF 16

(2017213S6) 2017213

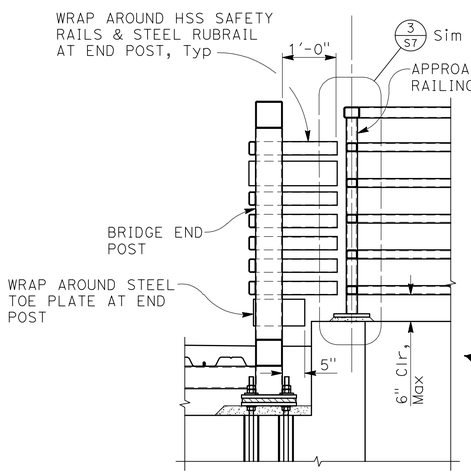

ELEVATION

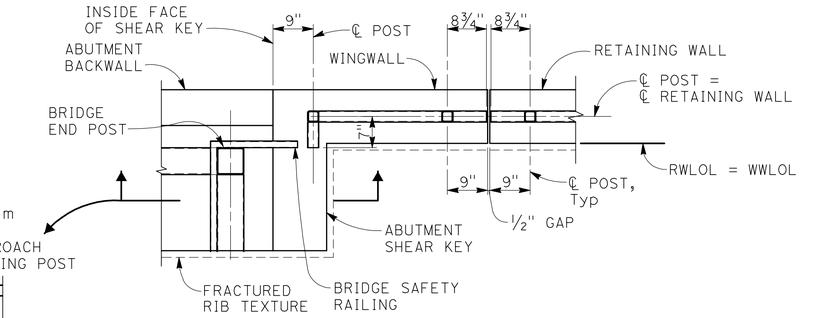

PLAN AT ABUTMENT 1

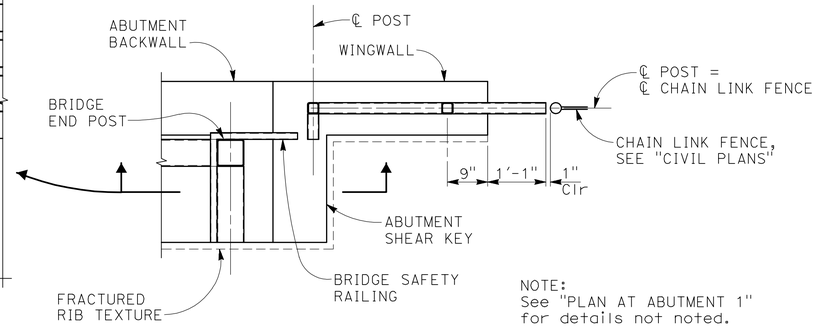

NOTE:
See "PLAN AT ABUTMENT 1" for details not noted.

PLAN AT ABUTMENT 2

APPROACH RAILING DETAIL (1/S7)

3/4" = 1'-0"

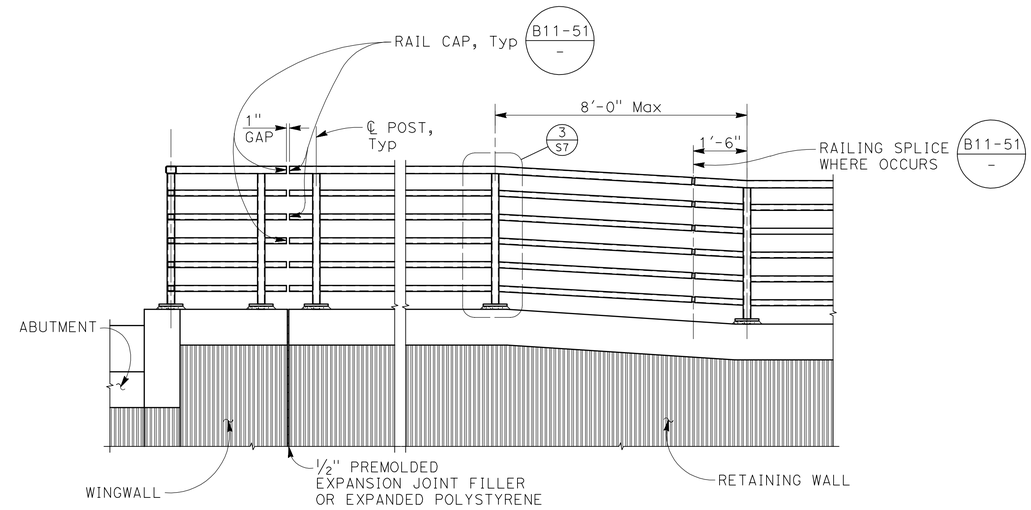

PEDESTRIAN RAILING (2/S7)

1/2" = 1'-0"

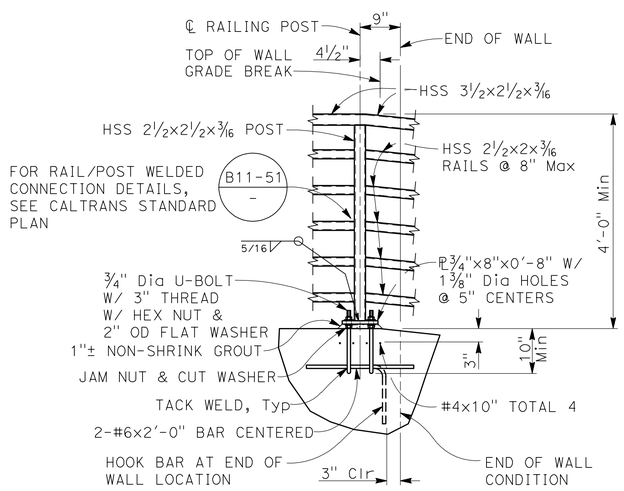

DETAIL (3/S7)

3/4" = 1'-0"

NOTES:
1. Use and attach lift strap at each rail post when lifting removable pedestrain railing for installation and remval.
2. Lift straps must be rated for 1500 Lbs minimum capacity and must not mar or scratch the railing.

PLAN CHECK SET/NOT FOR CONSTRUCTION (11/5/19)

BIGGS CARDOSA ASSOCIATES INC
STRUCTURAL ENGINEERS
865 The Alameda
San Jose, California 95126
408-296-5515

Designer Stamp: REGISTERED PROFESSIONAL ENGINEER MARYASH M HAKMAS No. 2639 Exp. 12/31/20 STRUCTURAL STATE OF CALIFORNIA

Record Drawings
Designer: MMH Date:
Public Works Inspector: Date:
Utility/Facility Dept. Head: Date:
Project Engineer: JDV Date:
Public Improvements Initially Accepted by the City Council on: Res. No.

Drawn By: RLQ Date: 04/16/18
Checked By: JAA Date: 03/04/19
Designed By: SAR Date: 04/16/18

Revisions

Num.	Description	Engr. Aprv.	Date
△			

CITY OF MILPITAS
ENGINEERING DIVISION
CENTRE POINTE - PENITENCIA CREEK PEDESTRIAN BRIDGE
ACROSS EAST PENITENCIA CREEK BETWEEN McCANDLESS DRIVE AND MONTAGUE EXPRESSWAY
RAILING DETAILS

RECOMMENDED FOR BIDDING BY: DATE:

PROJECT NO. 2005
Rec. Dwg No. 2-
SCALE: AS SHOWN
S7
SHEET 15 OF 16

STRUCTURAL AND GEOTECHNICAL SPECIAL INSPECTION AND TESTING

CONSTRUCTION QUALITY CONTROL / SPECIAL INSPECTION

CONSTRUCTION QUALITY CONTROL OF THE STRUCTURES WILL BE IMPLEMENTED THROUGH SPECIAL INSPECTIONS. CONSTRUCTION QUALITY CONTROL IS TO BE PERFORMED BY THE STRUCTURAL ENGINEER OF RECORD (BIGGS CARDOSA ASSOCIATES, INC.) TO MAINTAIN AND CERTIFY THAT THE STRUCTURAL WORK HAS BEEN CONSTRUCTED AS INDICATED, SPECIFIED AND INTENDED PER THE PROJECT PLAN AND SPECIFICATIONS. SPECIAL INSPECTIONS ENTAIL AND REQUIRED DURING CONSTRUCTION ON THE FOLLOWING TYPE OF WORK:

STRUCTURAL AND GEOTECHNICAL SPECIAL INSPECTION AND TESTING

GENERAL

THESE PROVISIONS SHALL GOVERN THE QUALITY, WORKMANSHIP, AND REQUIREMENTS FOR WORK COVERED. MATERIALS OF CONSTRUCTION AND TESTS SHALL CONFORM TO THE APPLICABLE STANDARDS LISTED. THE CONTRACTOR SHALL PROVIDE A MINIMUM 48 HOUR NOTICE TO THE SPECIAL INSPECTION AGENCY FOR WORK THAT REQUIRES SPECIAL INSPECTION. THE CONTRACTOR SHALL PROVIDE THE SPECIAL INSPECTOR WITH THE USE OF A LIFT OR OTHER EQUIPMENT AS REQUIRED TO ALLOW ACCESS TO THE WORK THAT REQUIRES INSPECTION. THE CONTRACTOR SHALL PROVIDE THE SPECIAL INSPECTOR ACCESS TO THE APPROVED PLANS AND SPECIFICATIONS AND RETAIN SPECIAL INSPECTION RECORDS AT THE JOB-SITE.

PRECONSTRUCTION MEETING

A PRECONSTRUCTION MEETING THAT INCLUDES PROJECT SUPERINTENDENT, INSPECTOR & ENGINEER IS REQUIRED. MEETING MINUTES MUST BE REVIEWED & APPROVED BY THE ENGINEER OF RECORD PRIOR TO BEGINNING WORK.

DEFINITIONS

CONTINUOUS SPECIAL INSPECTION: THE FULL-TIME OBSERVATION OF WORK REQUIRING SPECIAL INSPECTION BY AN APPROVED SPECIAL INSPECTOR WHO IS PRESENT IN THE AREA WHERE THE WORK IS BEING PERFORMED.

PERIODIC SPECIAL INSPECTION: THE PART-TIME OR INTERMITTENT OBSERVATION OF WORK REQUIRING SPECIAL INSPECTION BY AN APPROVED SPECIAL INSPECTOR WHO IS PRESENT IN THE AREA WHERE THE WORK HAS BEEN OR IS BEING PERFORMED AND AT THE COMPLETION OF THE WORK.

REFERENCE STANDARDS (EDITIONS)

- CALTRANS 2015 STANDARD SPECIFICATIONS
- CALTRANS 2015 STANDARD PLANS
- AASHTO LRFD BRIDGE DESIGN SPECIFICATIONS, 6TH EDITION AND CALIFORNIA AMENDMENTS PREFACE DATED JAN 2014, SUPPLEMENTED BY AASHTO LFRD GUIDE SPECIFICATIONS FOR THE DESIGN OF PEDESTRIAN BRIDGE DATED 2009 WITH 2015 INTERIM REVISIONS.
- AISC 341 – SEISMIC PROVISIONS FOR STRUCTURAL STEEL BUILDINGS; AMERICAN INSTITUTE OF STEEL CONSTRUCTION
- AISC 360 – SPECIFICATION FOR STRUCTURAL STEEL BUILDINGS; AMERICAN INSTITUTE OF STEEL CONSTRUCTION INC
- RCSC – SPECIFICATION FOR STRUCTURAL JOINTS USING ASTM A325 OR A490 BOLTS; RESEARCH COUNCIL ON STRUCTURAL CONNECTIONS
- AWS – AMERICAN WELDING SOCIETY
- ASTM – ASTM INTERNATIONAL

REPORT REQUIREMENTS

SPECIAL INSPECTORS SHALL KEEP RECORDS OF INSPECTIONS, AND SHALL FURNISH INSPECTION REPORTS TO CITY OF MILPITAS ENGINEERING DIVISION OFFICIAL AND TO THE REGISTERED DESIGN PROFESSIONAL IN RESPONSIBLE CHARGE. REPORTS SHALL INDICATE THAT THE WORK INSPECTED WAS OR WAS NOT COMPLETED IN CONFORMANCE TO THE APPROVED CONSTRUCTION DOCUMENTS. DISCREPANCIES SHALL BE BROUGHT TO THE IMMEDIATE ATTENTION OF THE CONTRACTOR FOR CORRECTION. IF THEY ARE NOT CORRECTED, THE DISCREPANCIES SHALL BE BROUGHT TO THE ATTENTION OF CITY OF MILPITAS ENGINEERING DIVISION OFFICIAL AND TO THE REGISTERED DESIGN PROFESSIONAL IN RESPONSIBLE CHARGE PRIOR TO THE COMPLETION OF THAT PHASE OF THE WORK. A FINAL REPORT DOCUMENTING THE REQUIRED SPECIAL INSPECTIONS AND CORRECTION OF ANY DISCREPANCIES NOTED IN THE INSPECTIONS SHALL BE SUBMITTED AT A POINT IN TIME AGREED UPON PRIOR TO THE START OF THE WORK.

SCHEDULE OF STRUCTURAL INSPECTION AND TESTING

STEEL

•STRUCTURAL STEEL:	
– CONFIRM IDENTIFICATION MARKINGS CONFORM TO ASTM STANDARDS SPECIFIED IN THE APPROVED CONSTRUCTION DOCUMENTS	AISC 360 N5.2
– REVIEW MANUFACTURER'S CERTIFICATE OF COMPLIANCE INCLUDING CERTIFIED TEST REPORTS	
– PERIODICALLY INSPECT STEEL CONNECTION DETAILS FOR COMPLIANCE WITH THE DETAILS SHOWN ON THE APPROVED CONSTRUCTION DOCUMENTS	AISC 360 & AISC 341
• WELDING (SHOP AND FIELD):	
– VERIFY WELDERS QUALIFICATIONS, PROCEDURE QUALIFICATION RECORDS (PQR) AND WELDING PROCEDURE SPECIFICATIONS (WPS) PRIOR TO THE START OF WORK	AISC 341 J6, AWS D1.3, AWS D1.4
– CONFIRM IDENTIFICATION MARKINGS OF WELD FILLER MATERIALS CONFORM TO AWS DESIGNATION LISTED IN THE WPS	AISC 360 N5.2
– REVIEW MANUFACTURER'S CERTIFICATE OF COMPLIANCE OF WELD FILLER MATERIALS	
– CONTINUOUSLY INSPECT COMPLETE AND PARTIAL JOINT PENETRATION GROOVE WELDS	AWS D1.1 6.9, AISC 341 J6
– CONTINUOUSLY INSPECT MULTIPASS FILLET WELDS	AWS D1.1 6.9, AISC 341 J6
– CONTINUOUSLY INSPECT PLUG AND SLOT WELDS	AWS D1.1 6.9, AISC 341 J6
– CONTINUOUSLY INSPECT MULTILE PASS FILLET WELDS	AWS D1.1 6.9, AISC 341 J6
– PERIODICALLY INSPECT SINGLE PASS FILLET WELDS	AWS D1.1 6.9, AISC 341 J6
– PERFORM CHEMICAL TESTING OF REINFORCING STEEL OTHER THAN ASTM A706 TO VERIFY WELDABILITY	AWS D1.4
– CONTINUOUSLY INSPECT WELDING OF REINFORCING STEEL	
– PERIODICALLY INSPECT INSTALLATION OF WELDED STUDS	AWS D1.1

CONCRETE

• CONCRETE	
– VERIFY USE OF ENGINEER OF RECORD REVIEWED MIX DESIGN AND MATERIAL CERTIFICATE	
– CONTINUOUSLY INSPECT CONCRETE PLACEMENT	
– PERIODICALLY INSPECT CURING MATERIAL FOR CONFORMANCE WITH APPROVED CONTRACT DOCUMENTS AND PLACEMENT	
– PERIODICALLY INSPECT FORMWORK FOR SHAPE, LOCATION AND DIMENSIONS	
– VERIFY CONCRETE STRENGTH PRIOR TO REMOVAL OF FORMS	
– FABRICATE 6" DIAMETER x 12" CYLINDER TEST SPECIMENS	ASTM C31
– PERFORM SLUMP TESTING AT THE TIME CONCRETE IS SAMPLED	ASTM C143
– PERFORM AIR CONTENT TESTING AT THE TIME CONCRETE IS SAMPLED	ASTM C173
– RECORD TEMPERATURE OF CONCRETE AT THE TIME CONCRETE IS SAMPLED	ASTM C1064
– PERFORM CONCRETE COMPRESSION TESTING	ASTM C39
• REINFORCING	
– REVIEW CERTIFIED MILL TEST REPORTS FOR REINFORCING STEEL	
– PERIODICALLY INSPECT REINFORCING STEEL AND PLACEMENT	

POST-INSTALLED ANCHORS

• GROUTED ANCHORS IN CONCRETE	
– CONTINUOUSLY INSPECT ANCHOR TYPE, DIAMETER, LENGTH AND CLEANLINESS	
– CONTINUOUSLY INSPECT HOLE LOCATION, DIAMETER, DEPTH AND CLEANLINESS	
– CONTINUOUSLY INSPECT ANCHOR EMBEDMENT, SPACING AND EDGE DISTANCE	
– CONTINUOUSLY INSPECT ANCHOR AND GROUT INSTALLATION	

NONSHRINK/EXPANSIVE GROUT

– CONFIRM MATERIALS COMPLY TO SPECIFICATIONS	
– CONTINUOUSLY INSPECT INSTALLATION	
– FABRICATE TESTING SAMPLES	ASTM C109
– PERFORM COMPRESSION TESTING	ASTM C109

MECHANICAL SPLICE COUPLERS

- PERIODICALLY INSPECT GRADE AND SIZE OF REINFORCEMENT, BAR INSERTION LENGTH AND PLACEMENT OF SPLICES
- PERIODICALLY INSPECT GRADE, SIZE AND THREAD QUALITY OF RODS, ROD INSERTION LENGTH AND PLACEMENT OF SPLICES
- PERIODICALLY INSPECT COUPLER IDENTIFICATION AND POSITION OF COUPLER

CAST-IN-PLACE DEEP FOUNDATION ELEMENTS (INSPECTIONS REQUIRED IN ADDITION TO THOSE REQUIRED FOR CONCRETE)

- CONTINUOUSLY INSPECT DRILLING OPERATIONS AND MAINTAIN COMPLETE AND ACCURATE RECORDS FOR EACH ELEMENT
- CONTINUOUSLY INSPECT PLACEMENT LOCATIONS AND PLUMBNESS, CONFIRM ELEMENT DIAMETERS AND LENGTHS. RECORD CONCRETE VOLUMES.
- PERFORM ADDITIONAL INSPECTIONS AS REQUIRED BY GEOTECHNICAL ENGINEER AND PER APPROVED GEOTECHNICAL REPORT.
- INSPECT AND TEST INSTALLATION OF INSPECTION PIPES AS REQUIRED
- PERFORM GAMMA-GAMMA LOGGING PER CALIFORNIA TEST 233 AS REQUIRED

SOILS

– PERIODICALLY VERIFY DEPTH OF SOIL FOUNDATION EXCAVATIONS	
– PERIODICALLY PERFORM CLASSIFICATION AND TESTING OF COMPACTED FILL MATERIALS	ASTM D-1557
– CONTINUOUSLY VERIFY USE OF PROPER MATERIALS, DENSITIES AND LIFT THICKNESSES DURING PLACEMENT AND COMPACTION OF COMPACTED FILL	
– PERIODICALLY INSPECT CLEARED AREAS AND SUBGRADES PREPARED TO RECEIVE FILL PRIOR TO PLACEMENT OF COMPACTED FILL	
– PERIODICALLY INSPECT DRAINAGE SYSTEM	
– PERFORM ADDITIONAL INSPECTIONS AS REQUIRED BY GEOTECHNICAL ENGINEER AND PER APPROVED GEOTECHNICAL REPORT	

PREFABRICATED BRIDGE

- PERIODICALLY INSPECT BRIDGE ERECTION AND INSTALLATION

PLAN CHECK SET/NOT FOR CONSTRUCTION (11/5/19)

BIGGS CARDOSA ASSOCIATES INC
STRUCTURAL ENGINEERS

865 The Alameda
San Jose, California 95126
408-296-5515

BCA

Designer Stamp:

REGISTERED PROFESSIONAL ENGINEER
MAHYASH M HAKMAS
No. 2639
Exp. 12/31/20
STRUCTURAL
STATE OF CALIFORNIA

Record Drawings

Designer: MMH **Date:**
Public Works Inspector: **Date:**
Utility/Facility Dept. Head: **Date:**
Project Engineer: JDV **Date:**
Public Improvements Initially Accepted by the City Council on: **Res. No.**

Drawn By: RLQ Date: 04/16/18
Checked By: JAA Date: 03/04/19
Designed By: SAR Date: 04/16/18

Revisions

Num.	Description	Engr. Aprv.	Date
△			

CITY OF MILPITAS
CALIFORNIA
JANUARY 26, 1954

CITY OF MILPITAS
ENGINEERING DIVISION

CENTRE POINTE - PENITENCIA CREEK PEDESTRIAN BRIDGE
ACROSS EAST PENITENCIA CREEK BETWEEN McCANDLESS DRIVE AND MONTAGUE EXPRESSWAY

STRUCTURAL & GEOTECHNICAL SPECIAL INSPECTION AND TESTING

RECOMMENDED FOR BIDDING BY: _____ DATE: _____

PROJECT NO. 2005
Rec. Dwg No. 2-
SCALE: AS SHOWN
S8
SHEET 16 OF 16

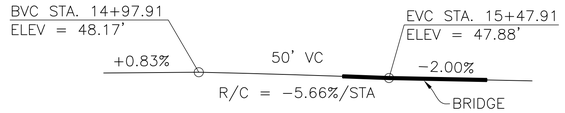

PROFILE GRADE

NO SCALE

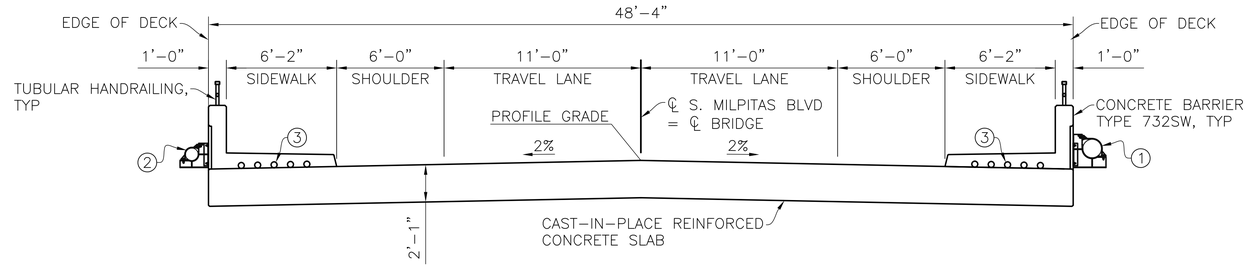

TYPICAL SECTION

1/4"=1'−0"

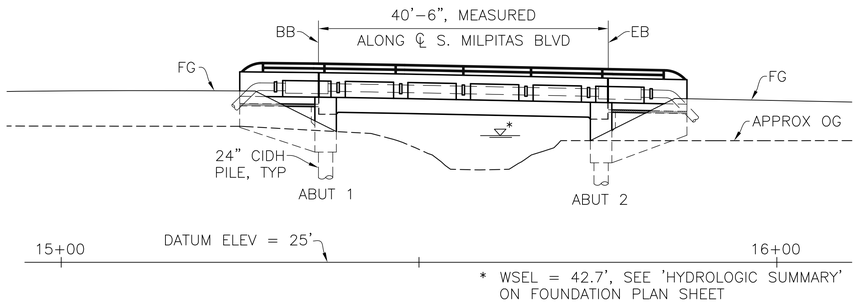

ELEVATION

1"=10'−0"

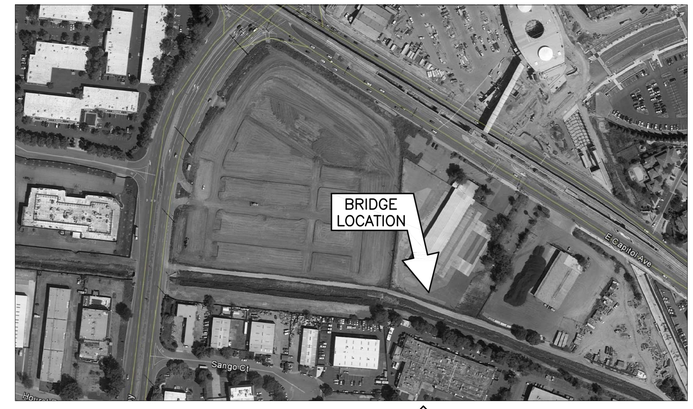

SITE PLAN

NO SCALE

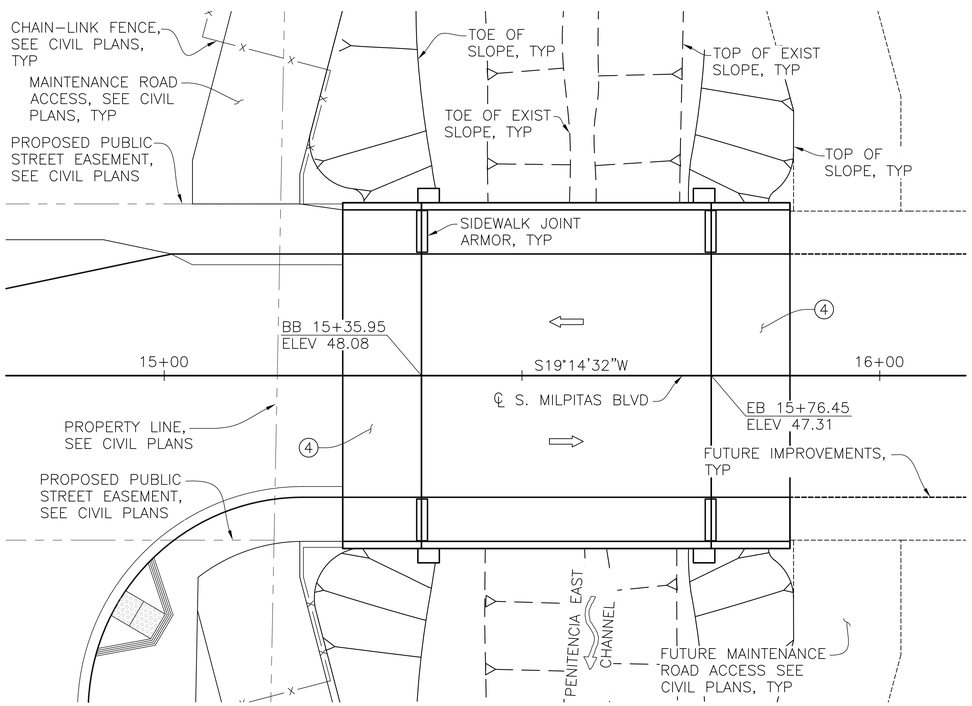

PLAN

1"=10'−0"

INDEX TO BRIDGE PLANS

SHEET NO.	TITLE
S1	GENERAL PLAN
S2	DECK CONTOURS
S3	FOUNDATION PLAN
S4	ABUTMENT LAYOUT
S5	ABUTMENT DETAILS
S6	TYPICAL SECTION
S7	STRUCTURE APPROACH SLAB
S8	UTILITY DETAILS

LEGEND:

1. 12" DIA. WATER, SEE CIVIL PLANS
2. 8" DIA. RECYCLED WATER, SEE CIVIL PLANS
3. 5−4" DIA. FUTURE UTILITY OPENING
4. STRUCTURE APPROACH SLAB

⇦ INDICATES DIRECTION OF TRAFFIC

ALL FUTURE UTILITY OPENINGS SHALL CONSIST OF SCH 40 PVC AND SHALL HAVE EXPANSION JOINTS AT BOTH ABUTMENT JOINTS, SEE "UTILITY DUCT EXPANSION JOINT" ON B11−58 / −

ALL FUTURE UTILITY OPENINGS TO BE FURNISHED AND INSTALLED BY BRIDGE CONTRACTOR, UNLESS NOTED OTHERWISE.

B0−1 / 1−2 — INDICATES CALTRANS STANDARD PLAN SHEET NO. / INDICATES DETAIL NO.

A / S3 — INDICATES SECTION NO. / INDICATES SHEET NO. SHOWN ON

1 / S5 — INDICATES DETAIL NO. / INDICATES SHEET NO. SHOWN ON

—x— INDICATES CHAIN−LINK FENCE, SEE CIVIL PLANS

CALTRANS 2018 STANDARD PLANS

	A3A	ABBREVIATIONS (SHEET 1 OF 3)
	A3B	ABBREVIATIONS (SHEET 2 OF 3)
	A3C	ABBREVIATIONS (SHEET 3 OF 3)
	A10A	LEGEND − LINES AND SYMBOLS (SHEET 1 OF 5)
	A10B	LEGEND − LINES AND SYMBOLS (SHEET 2 OF 5)
	A10C	LEGEND − LINES AND SYMBOLS (SHEET 3 OF 5)
	A10D	LEGEND − LINES AND SYMBOLS (SHEET 4 OF 5)
	A10E	LEGEND − LINES AND SYMBOLS (SHEET 5 OF 5)
	A62C	LIMITS OF PAYMENT FOR EXCAVATION AND BACKFILL − BRIDGE
RSP	B0−1	BRIDGE DETAILS
	B0−13	BRIDGE DETAILS
	B6−21	JOINT SEALS (MAXIMUM MOVEMENT RATING = 2")
RSP	B11−51	TUBULAR HANDRAILING
	B11−58	CONCRETE BARRIER TYPE 732SW (SHEET 1 OF 2)
	B11−59	CONCRETE BARRIER TYPE 732SW (SHEET 2 OF 2)

NOTES:

1. THE WORK EMBRACED HEREIN SHALL BE DONE IN ACCORDANCE WITH THE STATE OF CALIFORNIA 2018 STANDARD SPECIFICATIONS, REVISED STANDARD SPECIFICATIONS, STANDARD PLANS, AND REVISED STANDARD PLANS AND IN ACCORDANCE WITH THE PROJECT SPECIAL PROVISIONS.
2. THE CONTRACTOR SHALL VERIFY ALL EXISTING FIELD CONDITIONS, LAYOUT, DIMENSIONS AND COORDINATION WITH CIVIL PLANS PRIOR TO START OF CONSTRUCTION OR ORDERING OR FABRICATING ANY MATERIAL. ANY DISCREPANCIES SHALL BE IMMEDIATELY BROUGHT TO THE ATTENTION OF THE ENGINEER.
3. SEE CIVIL PLANS FOR ELEVATION CONTROL, FINISHED GRADE LIMITS, ADDITIONAL DETAILS, LAYOUT INFORMATION, AND NOTES.
4. A FOUNDATION EXPLORATION REPORT BY ENGEO DATED MARCH 26, 2020 HAS BEEN PREPARED FOR THIS PROJECT. CONTRACTOR SHALL CONFORM TO ALL REQUIREMENTS THEREIN.
5. THE CONTRACTOR WILL BE RESPONSIBLE FOR CONFORMING TO THE APPLICABLE CONSTRUCTION SAFETY ORDERS OF THE DIVISION OF INDUSTRIAL SAFETY OF THE STATE OF CALIFORNIA AND OSHA REQUIREMENTS.
6. FOR 'GENERAL NOTES', SEE DECK CONTOURS SHEET.

REGISTERED PROFESSIONAL ENGINEER — JOHNATHAN P. JENSEN — No. C82745 — CIVIL — STATE OF CALIFORNIA

DESIGNED BY:	DRAWN BY:	CHECKED BY:	DATE:
JPJ	JPJ	NRZ	04/01/2020

REV.	DATE	DESCRIPTION	BY

CORNERSTONE structural engineering group
986 W Alluvial Ave – Suite 201
Fresno, California 93711
tel 559.320.3200
fax 559.320.3201

GENERAL PLAN

S. MILPITAS BOULEVARD BRIDGE OVER PENITENCIA EAST CHANNEL

MILPITAS CALIFORNIA

SHEET NUMBER S1 OF 8 SHEETS

DRAWING NO. 2015024BS1

W:\2015\2015024 450 Montague Bridges\Vehicular Bridges\2015024BS1.dwg – 3/31/2020 6:13 PM

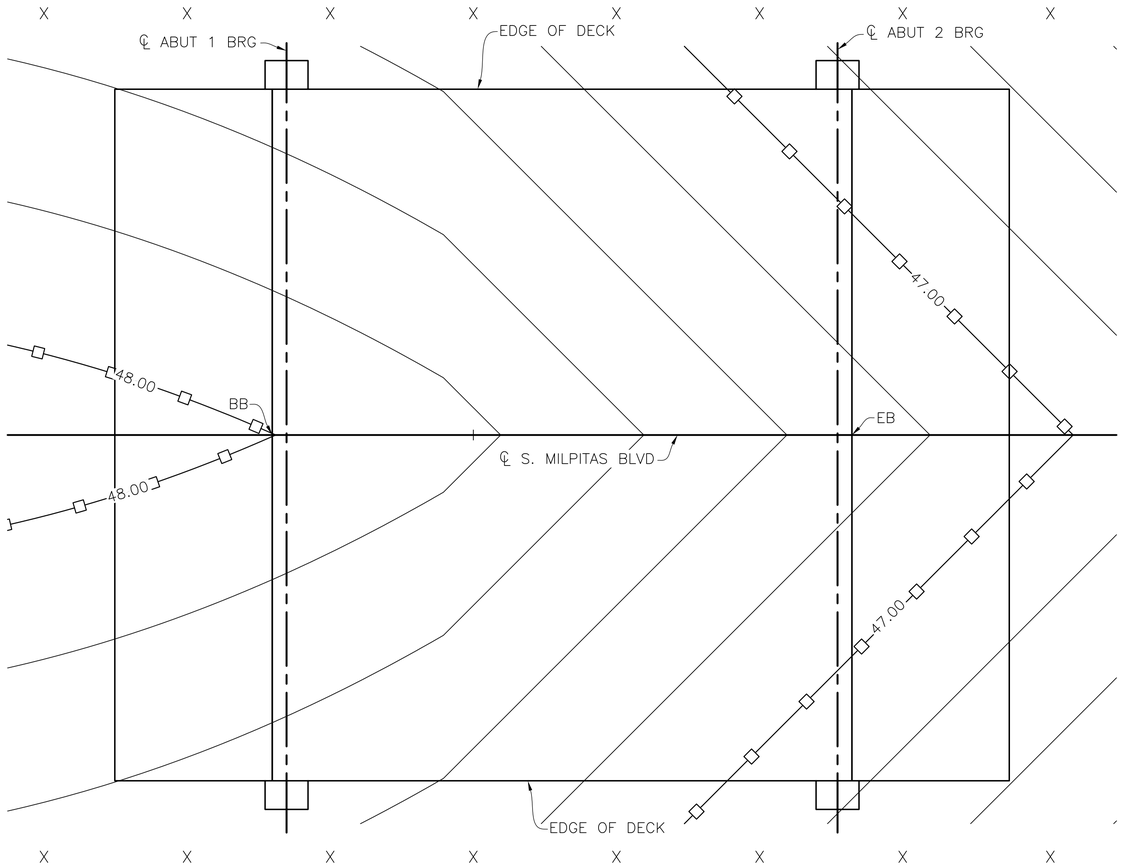

DECK GRADES

1"=5'-0"

NOTES:

1. CONTOURS INDICATE TOP OF CAST-IN-PLACE CONCRETE SLAB ELEVATION.
2. ☐ INDICATES ONE FOOT CONTOURS.
3. X INDICATES 10 FT INTERVALS MEASURED ALONG ℄ S. MILPITAS BOULEVARD
4. CONTOUR INTERVAL = 0.20 FT.
5. CONTOURS DO NOT INCLUDE CAMBER OR FALSEWORK DEFLECTION AND SETTLEMENT.
6. THIS SHEET SHALL NOT BE USED TO SCALE BRIDGE GRADES. A LARGE SCALE (1/4"=1'-0") DECK CONTOURS SHEET SHALL BE REQUESTED FROM THE ENGINEER FOR THIS PURPOSE.

GENERAL NOTES
LOAD AND RESISTANCE FACTOR DESIGN

DESIGN: AASHTO LRFD BRIDGE DESIGN SPECIFICATIONS, 8TH EDITION WITH CALIFORNIA AMENDMENTS

SEISMIC DESIGN: CALTRANS SEISMIC DESIGN CRITERIA (SDC) VERSION 2.0

DEAD LOAD: INCLUDES 35 PSF FOR FUTURE WEARING SURFACE.

LIVE LOADING: HL93 W/ "LOW-BOY" AND PERMIT DESIGN VEHICLE

SEISMIC LOADING: V_{S30} = 300 M/S
PEAK GROUND ACCELERATION = 0.82G
5% DAMPING

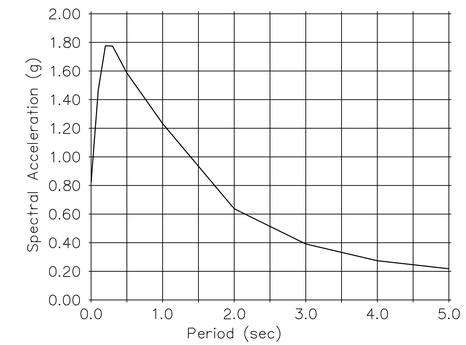

ACCELERATION RESPONSE SPECTRUM

REINFORCED CONCRETE: fy = 60 ksi
f'c = SEE 'CONCRETE STRENGTH & TYPE LIMITS' THIS SHEET
n = 8.0

SOIL CRITERIA FOR DESIGN: PER ENGEO'S FOUNDATION EXPLORATION VEHICULAR BRIDGE REPORT DATED MARCH 26, 2020:

SOIL UNIT WEIGHT = 120 PCF

ACTIVE DRAINED EQUIVALENT FLUID PRESSURE = 36 PCF*

AT-REST DRAINED EQUIVALENT FLUID PRESSURE = 70 PCF*

SEISMIC ACTIVE INCREMENT PRESSURE = 34 PCF

NOTE:
* FOR BACKFILL MATERIAL CONFORMING TO CALTRANS 2018 STANDARD SPECIFICATIONS SECTION 19-3.02C "STRUCTURE BACKFILL"

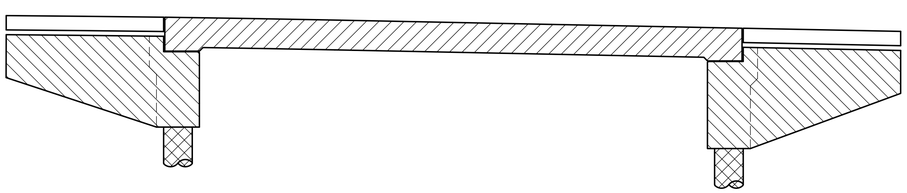

INDICATES CIDH PILING (f'c = 3,600 PSI AT 28 DAYS)

INDICATES STRUCTURAL CONCRETE, BRIDGE (f'c = 3,600 PSI AT 28 DAYS)

INDICATES STRUCTURAL CONCRETE, BRIDGE (POLYMER FIBER) (f'c = 4,000 PSI AT 28 DAYS)

INDICATES STRUCTURAL CONCRETE, APPROACH SLAB (f'c = 4,000 PSI AT 28 DAYS)

CONCRETE STRENGTH & TYPE LIMITS

NO SCALE

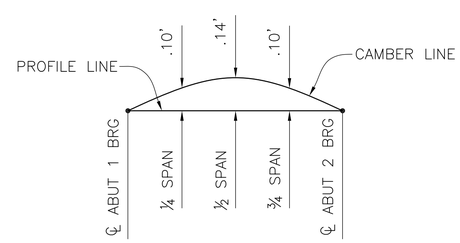

(DOES NOT INCLUDE ALLOWANCE FOR FALSEWORK SETTLEMENT OR DEFLECTION)

CAMBER DIAGRAM

NO SCALE

REGISTERED PROFESSIONAL ENGINEER JOHNATHAN F. JENSEN No. C82745 CIVIL STATE OF CALIFORNIA

DESIGNED BY: JPJ
DRAWN BY: JPJ
CHECKED BY: NRZ
DATE: 04/01/2020

REV.	DATE	DESCRIPTION	BY

CORNERSTONE structural engineering group
986 W Alluvial Ave - Suite 201
Fresno, California 93711
559.320.3200
fax 559.320.3201

DECK CONTOURS

S. MILPITAS BOULEVARD BRIDGE OVER PENITENCIA EAST CHANNEL

MILPITAS CALIFORNIA

SHEET NUMBER S2 OF 8 SHEETS

DRAWING NO. 2015024BS2

W:\2015\2015024 450 Montague Bridges\Vehicular Bridge\2015024BS2.dwg - 3/31/2020 6:14 PM

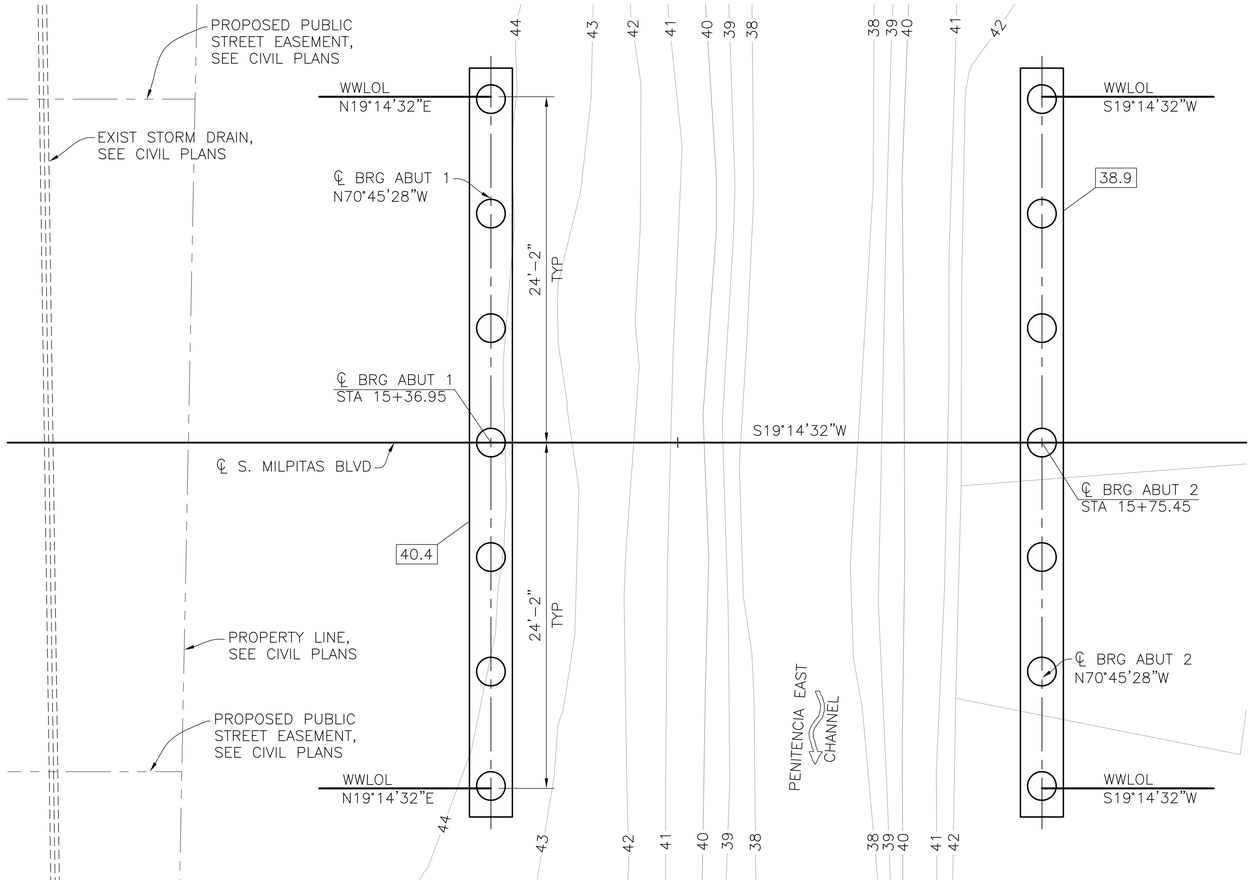

FOUNDATION PLAN

1"=5'-0"

NOTES:

◯ INDICATES 24" DIA CIDH PILES

40.4 INDICATES BOTTOM OF ABUTMENT ELEVATION

1. A REPRESENTATIVE OF THE GEOTECHNICAL ENGINEER OF RECORD SHALL BE ON SITE AT ALL TIMES DURING THE PILE INSTALLATION OPERATION. UPON COMPLETION, THE GEOTECHNICAL ENGINEER OF RECORD SHALL PROVIDE THE OWNER AND STRUCTURAL ENGINEER OF RECORD WITH A LETTER STATING THAT THE PILE INSTALLATION HAS MET THE PROJECT REQUIREMENTS.
2. –42— INDICATES CONTOUR ELEVATION.
3. CONTOUR INTERVAL = 1'
4. CONTRACTOR SHALL VERIFY ALL EXISTING CONTROLLING FIELD DIMENSIONS BEFORE ORDERING OR FABRICATING ANY MATERIAL.
5. CONTOURS SHOWN INDICATE EXISTING CONDITIONS. FOR FINISHED GRADE LIMITS, SEE CIVIL PLANS.
6. SEE CIVIL PLANS FOR ELEVATION CONTROL.

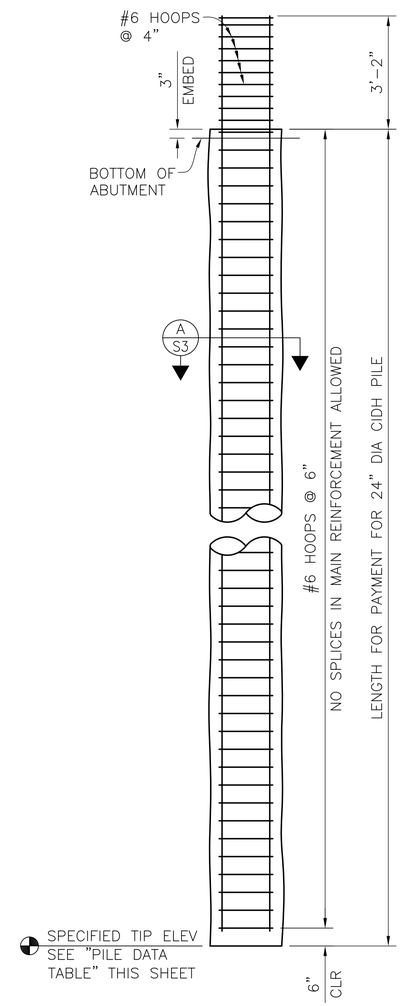

CIDH PILE ELEVATION

1/2"=1'-0"

PILE DATA TABLE

SUPPORT LOCATION	PILE TYPE	NOMINAL RESISTANCE (KIPS)		DESIGN TIP ELEVATIONS (FT)	SPECIFIED TIP ELEVATION (FT)
		COMPRESSION	TENSION		
ABUT. 1	24" CIDH	300	–	(1) –14.0; (4) 10.4	–14.0
ABUT. 2	24" CIDH	300	–	(1) –15.0; (4) 8.9	–15.0

NOTES:

1. DESIGN TIP ELEVATION IS CONTROLLED BY THE FOLLOWING DEMANDS: (1) COMPRESSION (2) TENSION (3) SETTLEMENT (4) LATERAL
2. THE SPECIFIED TIP ELEVATION SHALL NOT BE RAISED ABOVE THE DESIGN TIP ELEVATIONS FOR TENSION, LATERAL, OR TOLERABLE SETTLEMENT
3. REQUIRED CAPACITY IS BASED ON LRFD METHOD FOR THE ABUTMENTS

HYDROLOGIC SUMMARY

FREQUENCY (YEARS)	100
DISCHARGE (CUBIC FEET PER SECOND)	340
WATER SURFACE (ELEVATION AT BRIDGE IN FEET)	42.7

FLOOD PLAIN DATA ARE BASED UPON CALCULATIONS PREPARED BY SCHAAF AND WHEELER DATED JULY 9, 2015 PROVIDED BY CARLSON, BARBEE & GIBSON AND ARE SHOWN TO MEET FEDERAL REQUIREMENTS. THE ACCURACY OF SAID INFORMATION IS NOT WARRANTED BY CORNERSTONE STRUCTURAL ENGINEERING GROUP AND INTERESTED OR AFFECTED PARTIES SHOULD MAKE THEIR OWN INVESTIGATION.

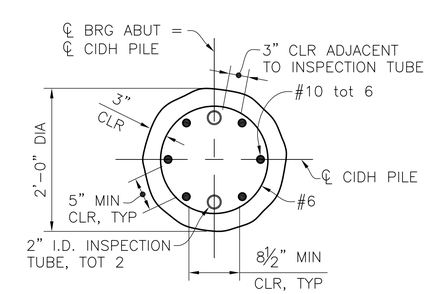

SECTION A S3

1"=1'-0"

NOTES:

1. INSPECTION TUBES ONLY REQUIRED IF CONCRETE IS PLACED UNDER SLURRY.
2. ALL HOOP REINFORCING SHALL UTILIZE "ULTIMATE LEVEL" SPLICES.

REGISTERED PROFESSIONAL ENGINEER JONATHAN P. JENSEN No. C82745 CIVIL STATE OF CALIFORNIA

DESIGNED BY: JPJ	DRAWN BY: JPJ	CHECKED BY: NRZ	DATE: 04/01/2020

REV.	DATE	DESCRIPTION	BY

CORNERSTONE structural engineering group
986 W Alluvial Ave – Suite 201
Fresno, California 93711
559.320.3200
fax 559.320.3201

FOUNDATION PLAN

S. MILPITAS BOULEVARD BRIDGE OVER PENITENCIA EAST CHANNEL

MILPITAS CALIFORNIA

SHEET NUMBER S3 OF 8 SHEETS

DRAWING NO. 2015024BS3

W:\2015\2015024 450 Montague Bridges\Vehicular Bridges\2015024BS3.dwg – 3/31/2020 6:14 PM

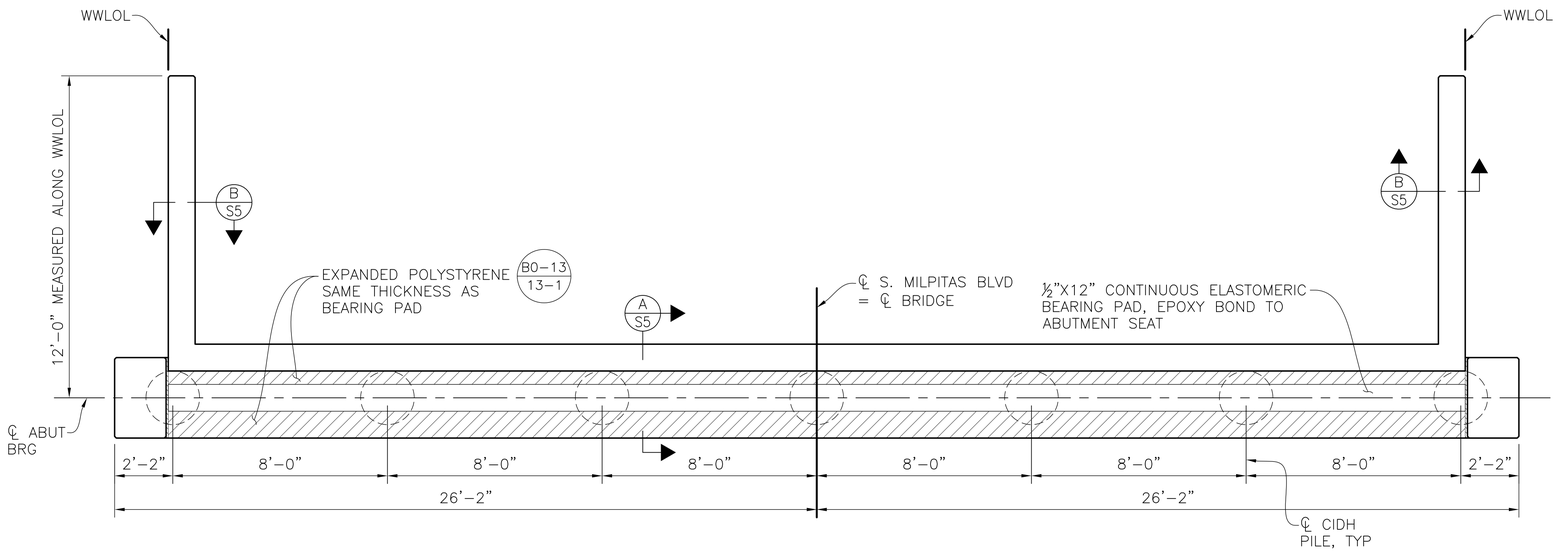

ABUTMENT PLAN

3/8"=1'-0"

NOTE:
ABUT 1 SHOWN,
ABUT 2 SIMILAR

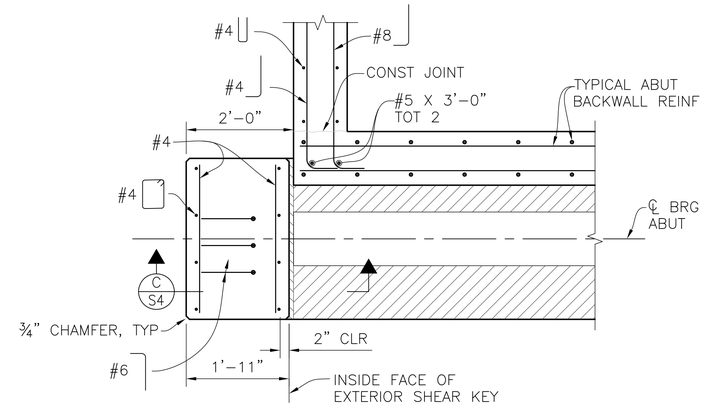

SECTION A/S4

3/4"=1'-0"

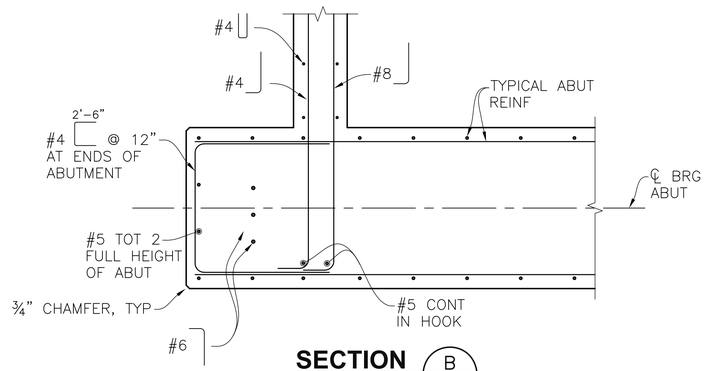

SECTION B/S4

3/4"=1'-0"

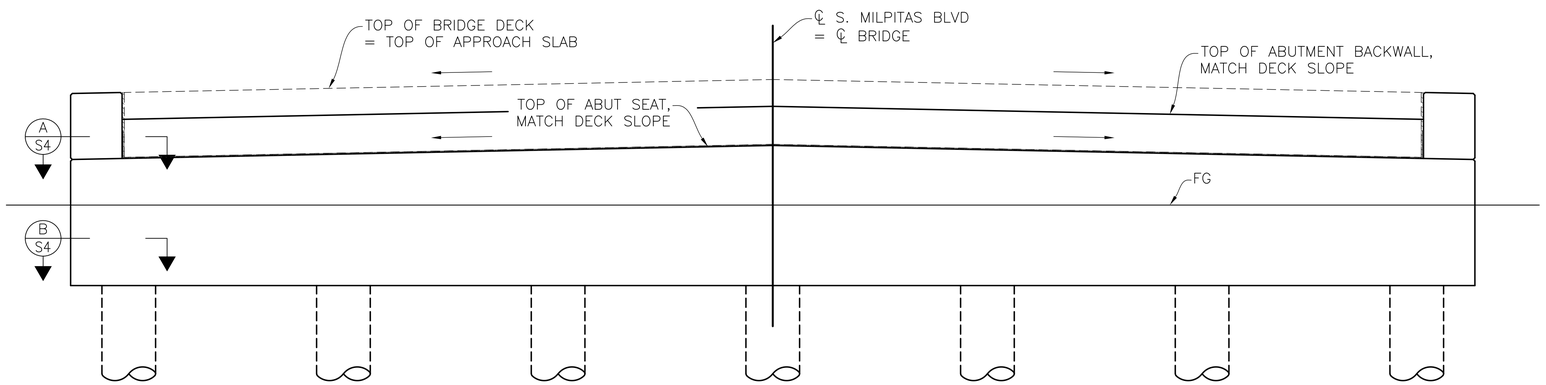

ABUTMENT ELEVATION

3/8"=1'-0"

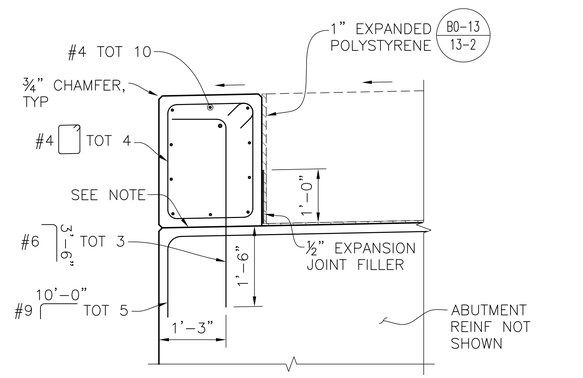

SECTION C/S4

3/4"=1'-0"

NOTE:
MANDATORY SMOOTH UNBONDED CONSTRUCTION JOINT. SMOOTH TROWEL FINISH WITH TWO LAYERS 15 LBS BUILDING PAPER.

REGISTERED PROFESSIONAL ENGINEER
JOHNATHAN P. JENSEN
No. C82745
CIVIL
STATE OF CALIFORNIA

DESIGNED BY: JPJ	DRAWN BY: JPJ	CHECKED BY: NRZ	DATE: 04/01/2020

REV.	DATE	DESCRIPTION	BY

CORNERSTONE structural engineering group
986 W Alluvial Ave – Suite 201
Fresno, California 93711
559.320.3200
fax 559.320.3201

ABUTMENT LAYOUT

S. MILPITAS BOULEVARD BRIDGE
OVER PENITENCIA EAST CHANNEL

MILPITAS CALIFORNIA

SHEET NUMBER
S4
OF 8 SHEETS
DRAWING NO.
2015024BS4

W:\2015\2015024 450 Montague Bridges\Vehicular Bridge\2015024BS4.dwg – 3/31/2020 6:14 PM

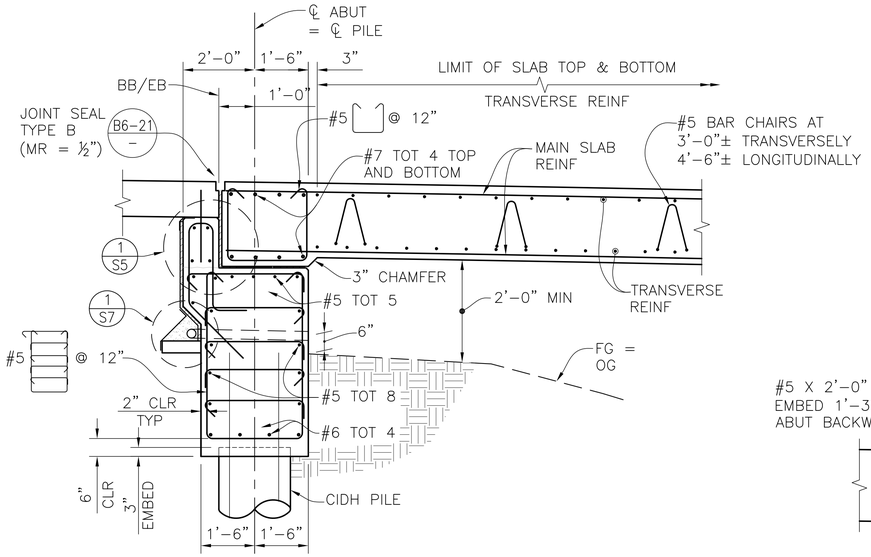

SECTION A/S5
1/2"=1'-0"

NOTE:
ABUT 1 SHOWN,
ABUT 2 SIMILAR

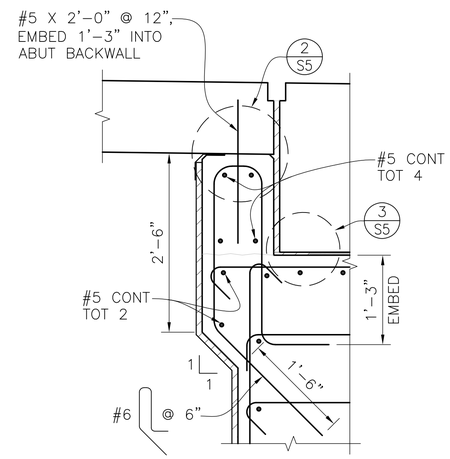

DETAIL 1/S5
1" = 1'-0"

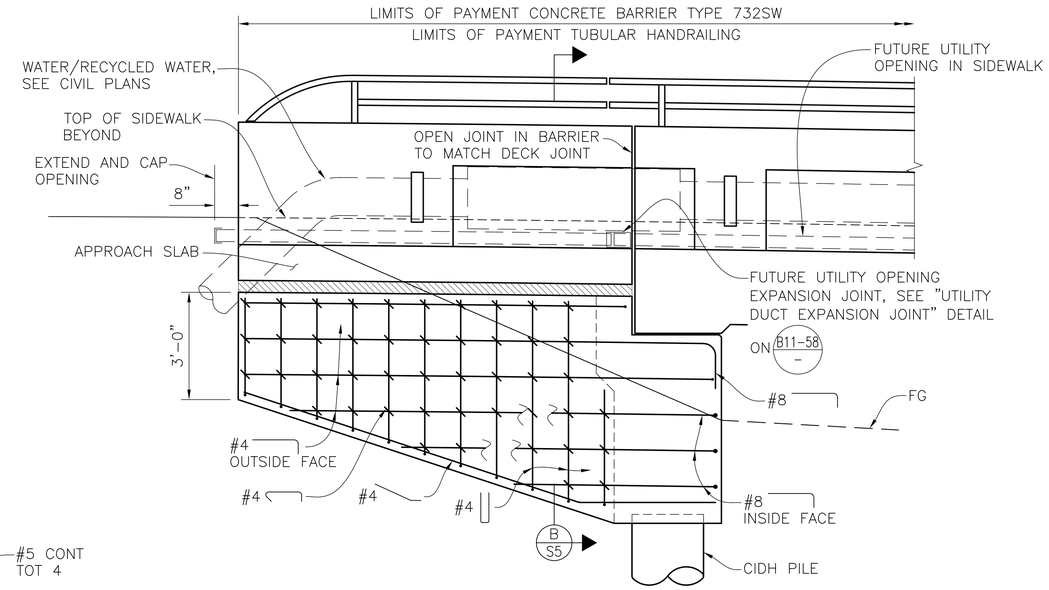

WINGWALL ELEVATION
1/2" = 1'-0"

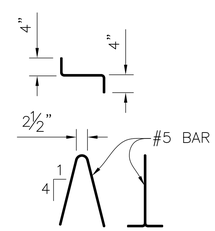

BAR CHAIR DETAIL
NO SCALE

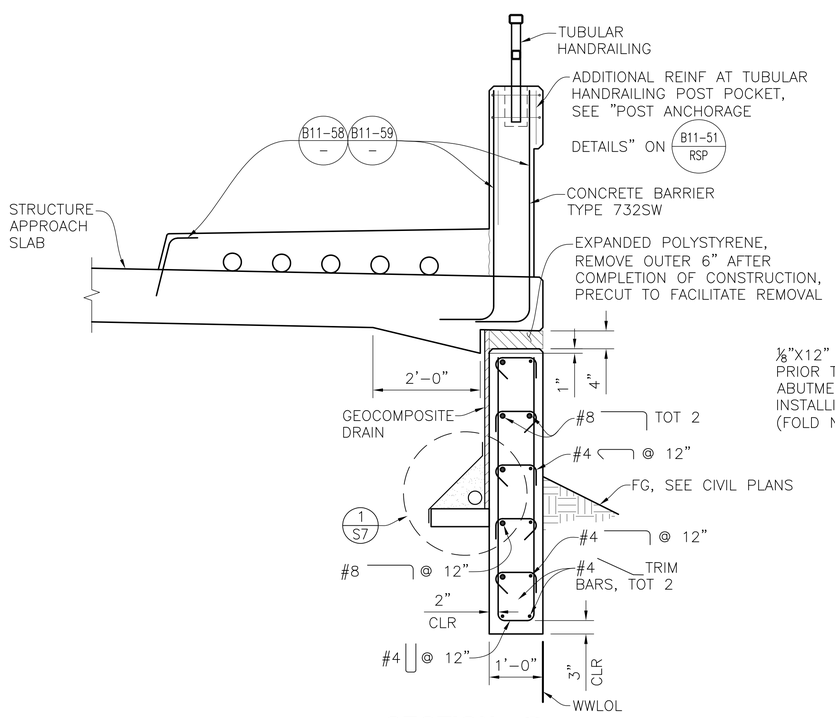

SECTION B/S5
3/4"=1'-0"

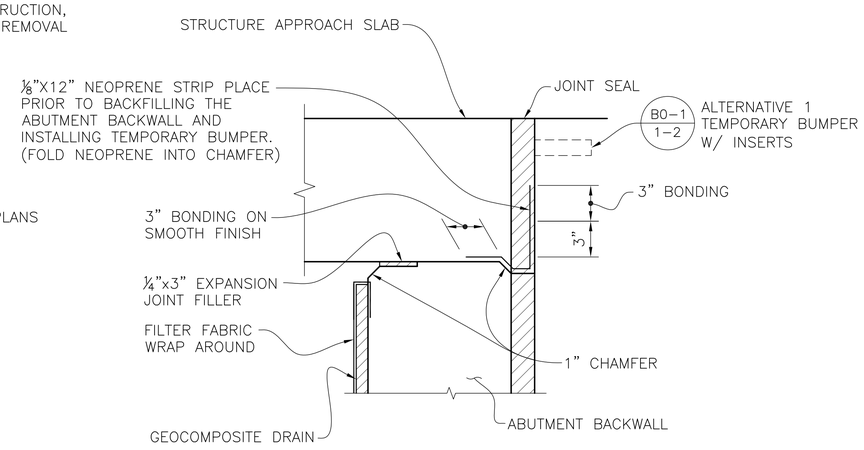

DETAIL 2/S5
NO SCALE

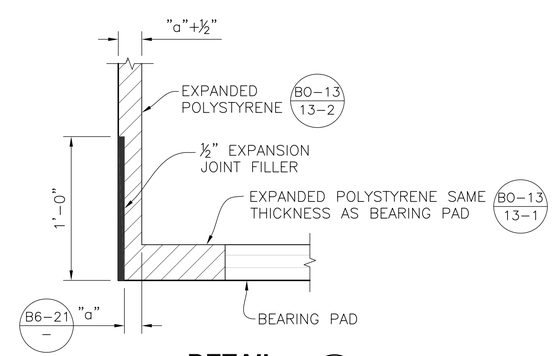

DETAIL 3/S5
NO SCALE

REGISTERED PROFESSIONAL ENGINEER
JOHNATHAN P. JENSEN
No. C82745
CIVIL
STATE OF CALIFORNIA

DESIGNED BY: JPJ	DRAWN BY: JPJ	CHECKED BY: NRZ	DATE: 04/01/2020

REV.	DATE	DESCRIPTION	BY

CORNERSTONE structural engineering group
986 W Alluvial Ave., Suite 201
Fresno, California 93711
559.320.3200
fax 559.320.3201

ABUTMENT DETAILS

S. MILPITAS BOULEVARD BRIDGE
OVER PENITENCIA EAST CHANNEL

MILPITAS CALIFORNIA

SHEET NUMBER
S5
OF 8 SHEETS
DRAWING NO.
2015024BS5

W:\2015\2015024 450 Montague Bridges\Vehicular Bridge\2015024BS5.dwg - 3/31/2020 6:15 PM

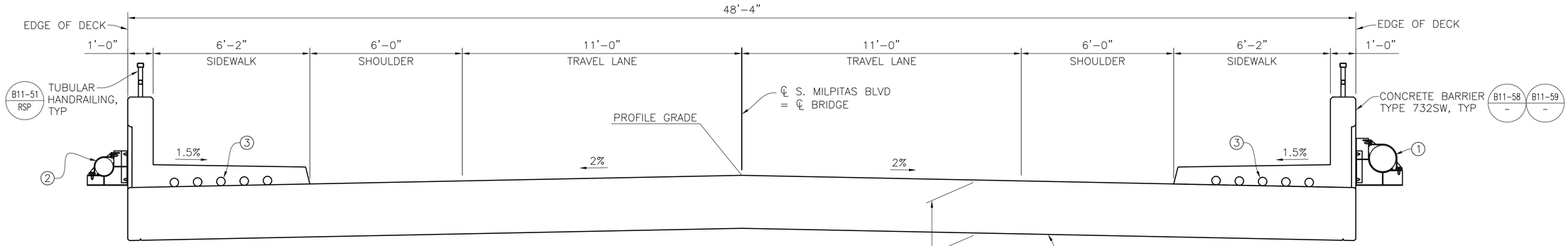

TYPICAL SECTION

1/2"=1'-0"

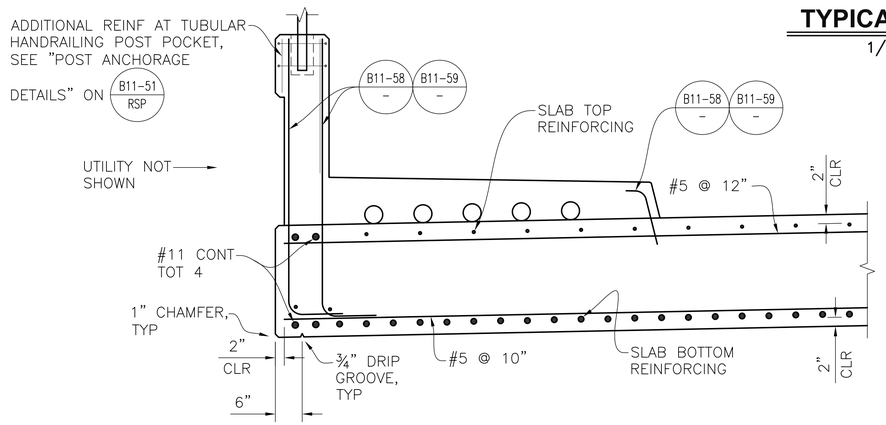

PARTIAL TYPICAL SECTION

3/4"=1'-0"

LEGEND:

1. 12" DIA. WATER, SEE CIVIL PLANS
2. 8" DIA. RECYCLED WATER, SEE CIVIL PLANS
3. 5-4" DIA. FUTURE UTILITY OPENING

ALL FUTURE UTILITY OPENINGS SHALL CONSIST OF SCH 40 PVC AND SHALL HAVE EXPANSION JOINTS AT BOTH ABUTMENT JOINTS, SEE "UTILITY DUCT EXPANSION JOINT" ON B11-58 -

ALL FUTURE UTILITY OPENINGS TO BE FURNISHED AND INSTALLED BY BRIDGE CONTRACTOR, UNLESS NOTED OTHERWISE.

BAR SPLICE LENGTH

BAR SIZE	#4	#5	#6	#7	#8	#9	#10	#11
TOP & BOTTOM LONGITUDINAL SLAB REINFORCEMENT (IN)	24	30	36	39	45	69	78	87

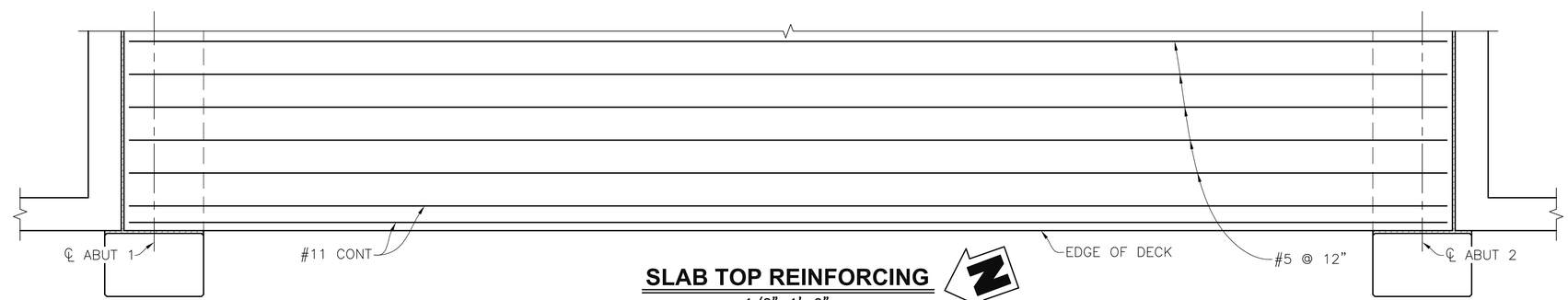

SLAB TOP REINFORCING

1/2"=1'-0"

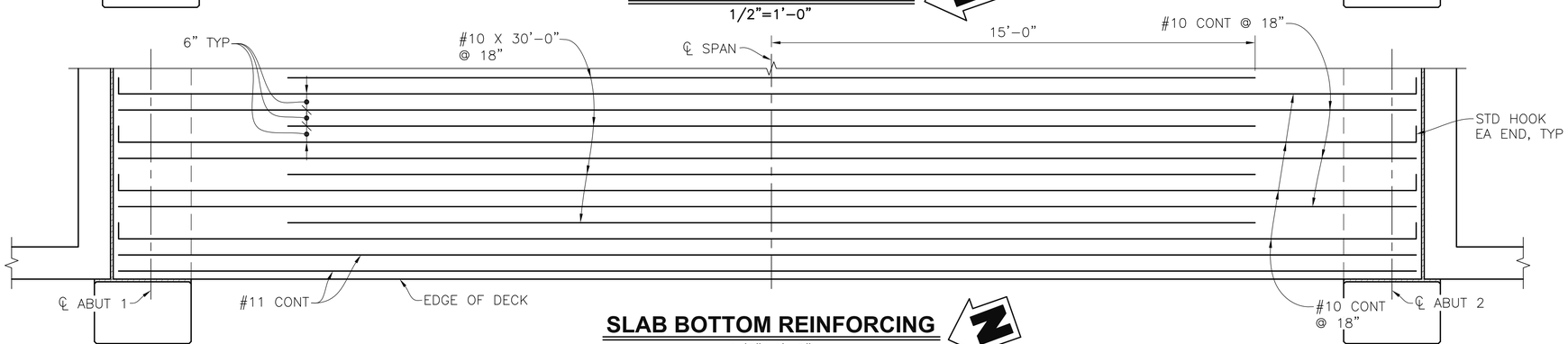

SLAB BOTTOM REINFORCING

1/2"=1'-0"

REGISTERED PROFESSIONAL ENGINEER JOHNATHAN P. JENSEN No. C82745 CIVIL STATE OF CALIFORNIA

DESIGNED BY: JPJ	DRAWN BY: JPJ	CHECKED BY: NRZ	DATE: 04/01/2020

REV.	DATE	DESCRIPTION	BY

CORNERSTONE structural engineering group
986 W Alluvial Ave - Suite 201
Fresno, California 93711
559.320.3200
fax 559.320.3201

TYPICAL SECTION

S. MILPITAS BOULEVARD BRIDGE OVER PENITENCIA EAST CHANNEL

MILPITAS CALIFORNIA

SHEET NUMBER S6 OF 8 SHEETS

DRAWING NO. 2015024BS6

W:\2015\2015024 450 Montague Bridges\Vehicular Bridges\2015024BS6.dwg - 3/31/2020 6:15 PM

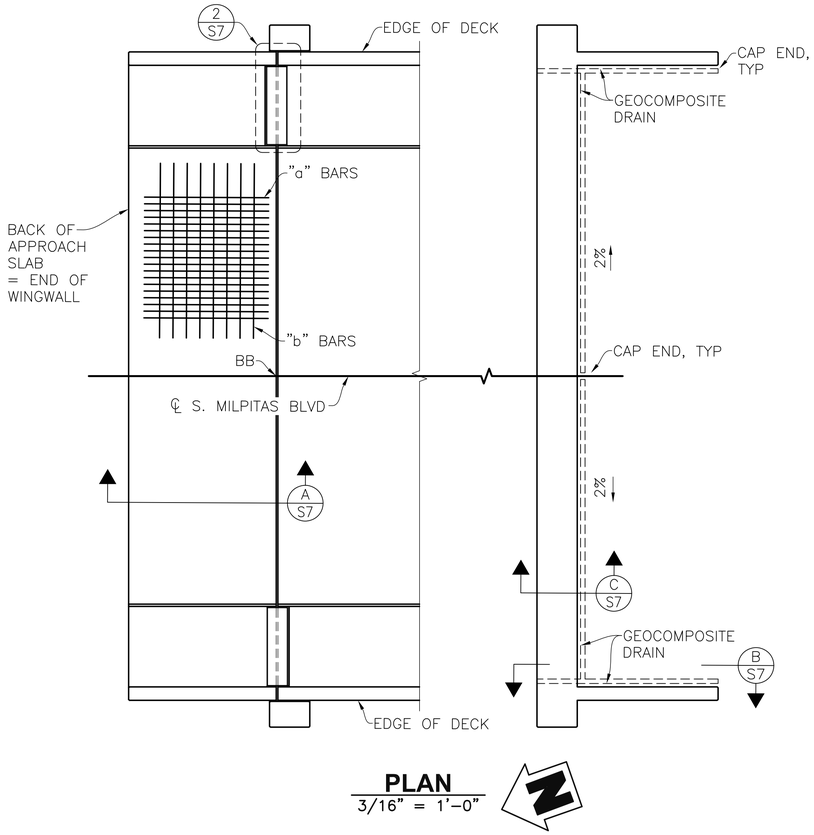

PLAN
3/16" = 1'-0"

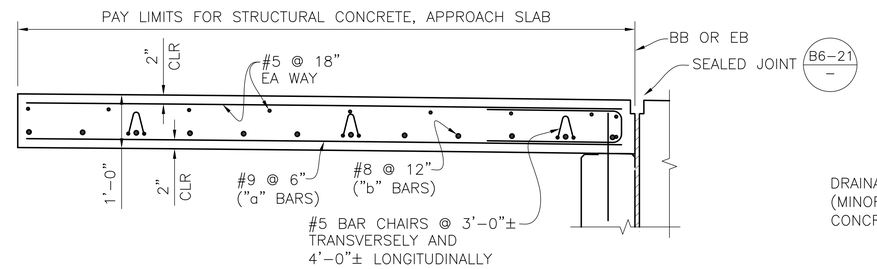

SECTION A/S7
3/4" = 1'-0"

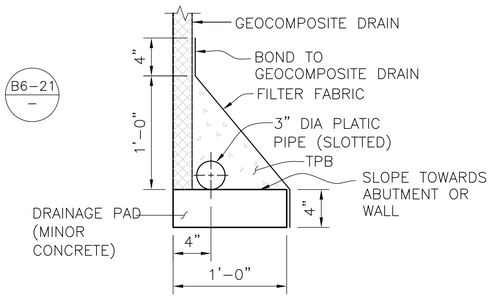

DETAIL 1/S7
NO SCALE

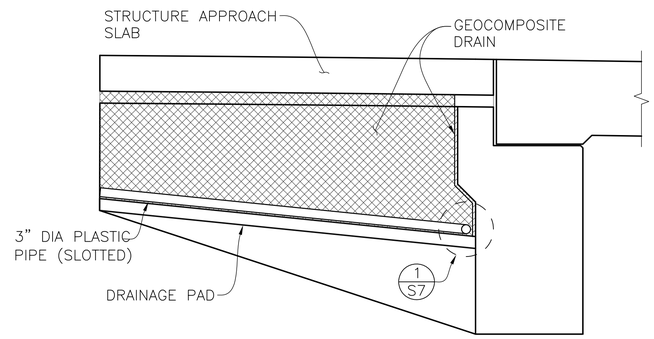

SECTION B/S7
NO SCALE

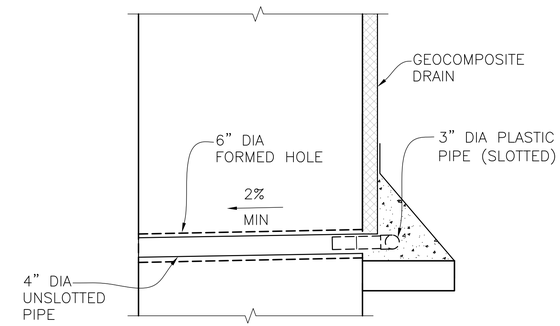

SECTION C/S7
NO SCALE

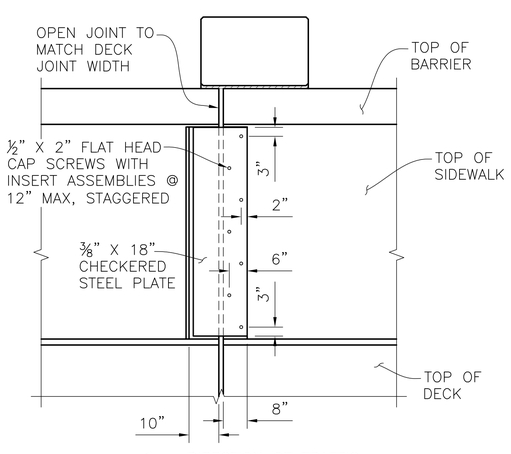

DETAIL 2/S7
1/2" = 1'-0"

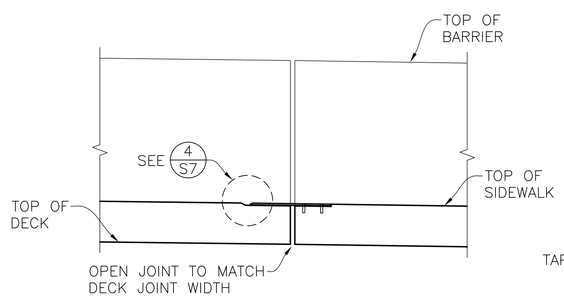

ELEVATION
NO SCALE

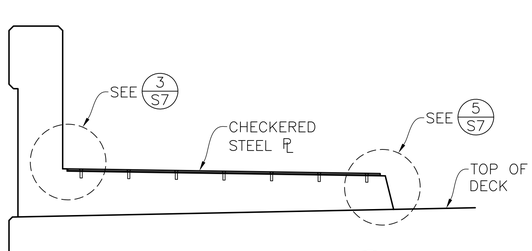

SECTION D/S7
NO SCALE

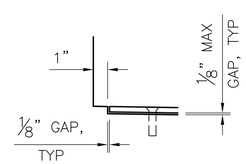

DETAIL 3/S7
NO SCALE

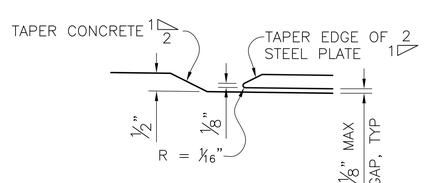

DETAIL 4/S7
NO SCALE

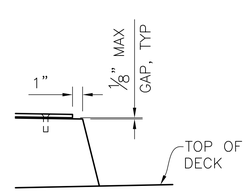

DETAIL 5/S7
NO SCALE

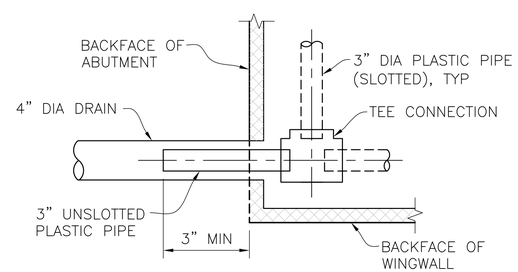

"T" DETAIL

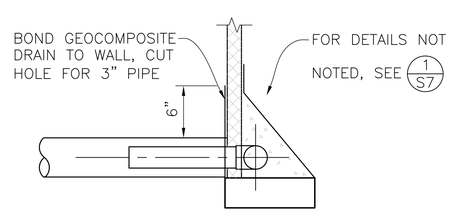

AT "T" DETAIL

DRAINAGE DETAILS
NO SCALE

REGISTERED PROFESSIONAL ENGINEER JONATHAN F. JENSEN No. C82745 CIVIL STATE OF CALIFORNIA

DESIGNED BY: JPJ	DRAWN BY: JPJ	CHECKED BY: NRZ	DATE: 04/01/2020

REV.	DATE	DESCRIPTION	BY

CORNERSTONE structural engineering group
986 W Alluvial Ave – Suite 201
Fresno, California 93711
559.320.3200
fax 559.320.3201

STRUCTURE APPROACH SLAB
S. MILPITAS BOULEVARD BRIDGE OVER PENITENCIA EAST CHANNEL
MILPITAS CALIFORNIA

SHEET NUMBER S7
OF 8 SHEETS
DRAWING NO. 2015024BS7

W:\2015\2015024 450 Montague Bridges\Vehicular Bridges\2015024BS7.dwg – 3/31/2020 6:15 PM

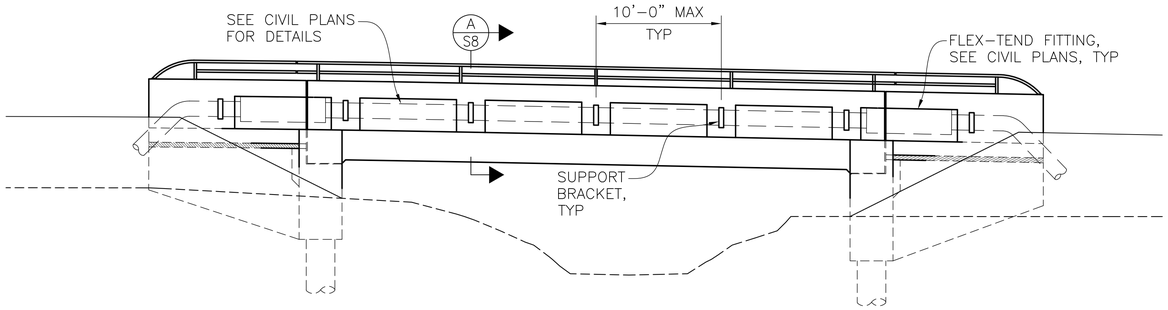

UTILITY ELEVATION

1" = 5'-0"

NOTE:
1. WEST EDGE OF DECK SHOWN, EAST EDGE OF DECK SIMILAR.

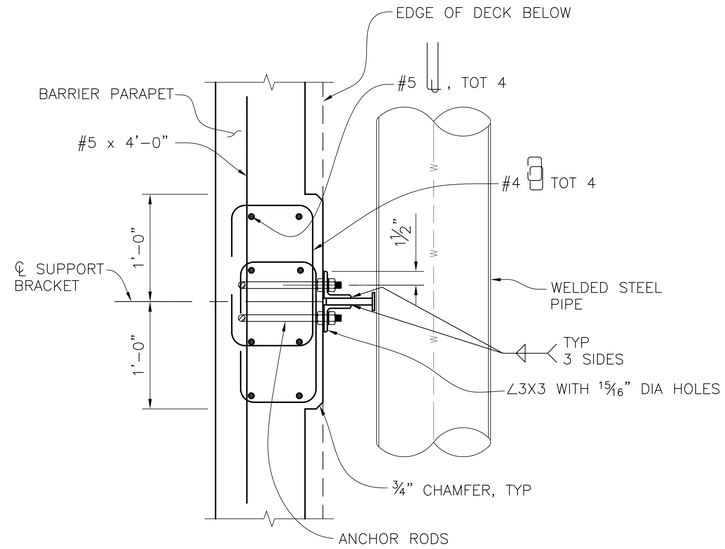

SECTION B S8

1-1/2"=1'-0"

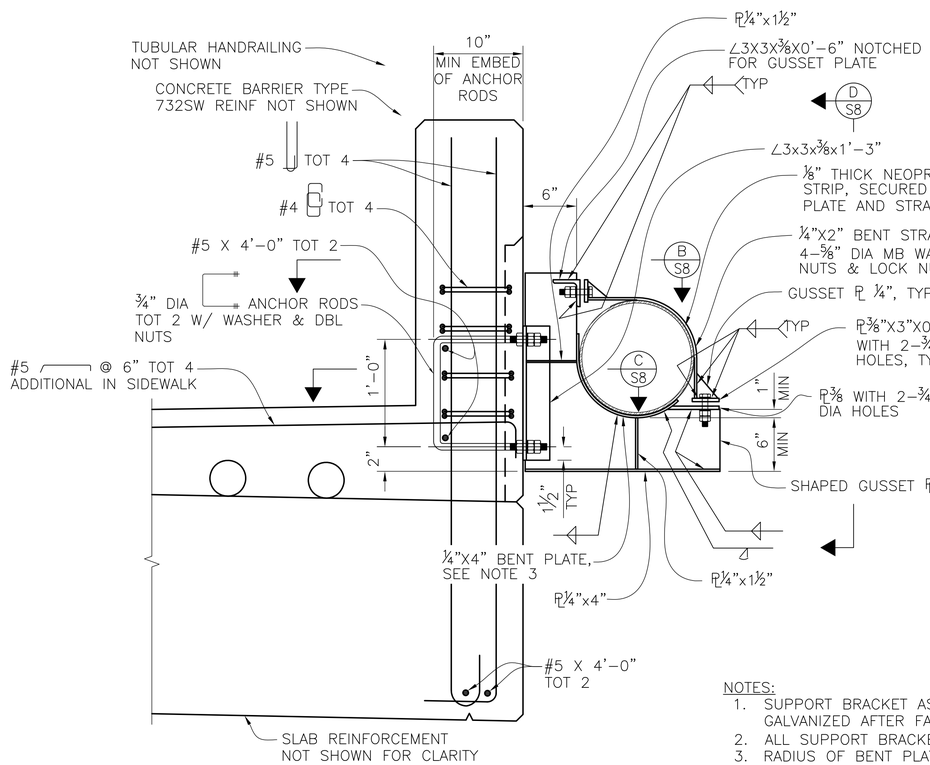

SECTION A S8

1-1/2"=1'-0"

NOTES:
1. SUPPORT BRACKET ASSEMBLY TO BE GALVANIZED AFTER FABRICATION
2. ALL SUPPORT BRACKET WELDS ARE ¼" TYP
3. RADIUS OF BENT PLATE TO MATCH OD OF UTILITY PIPE PLUS THICKNESS OF NEOPRENE

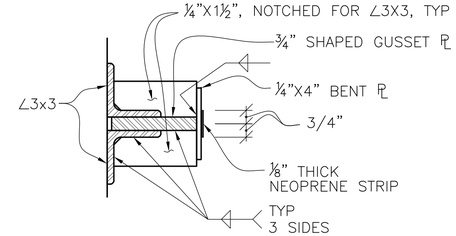

SECTION C S8

3"=1'-0"

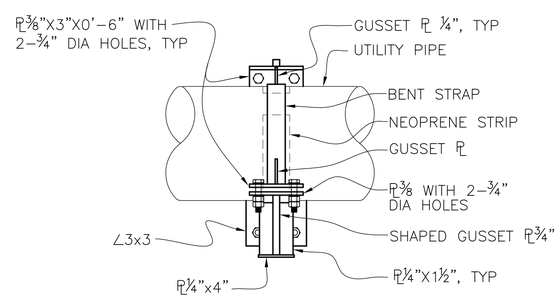

SECTION D S8

1-1/2"=1'-0"

REGISTERED PROFESSIONAL ENGINEER JONATHAN P. JENSEN No. C82745 CIVIL STATE OF CALIFORNIA

DESIGNED BY: JPJ	DRAWN BY: JPJ	CHECKED BY: NRZ	DATE: 04/01/2020

REV.	DATE	DESCRIPTION	BY

CORNERSTONE structural engineering group
986 W Alluvial Ave - Suite 201
Fresno, California 93711
559.320.3200
fax 559.320.3201

UTILITY DETAILS

S. MILPITAS BOULEVARD BRIDGE OVER PENITENCIA EAST CHANNEL

MILPITAS CALIFORNIA

SHEET NUMBER S8 OF 8 SHEETS

DRAWING NO. 2015024BS8

W:\2015\2015024 450 Montague Bridges\Vehicular Bridges\2015024BS8.dwg - 3/31/2020 6:15 PM

APPENDIX E
Noise and Vibration Assessment by Illingworth & Rodkin, Inc., dated 2021

SOUTH MILPITAS BOULEVARD BRIDGE NOISE AND VIBRATION ASSESSMENT

Milpitas, California

November 5, 2021

Prepared for:

Matthew Moore
Associate Project Manager
David J. Powers & Associates, Inc.
1736 Franklin Street, Suite 300
Oakland, CA 94612

Prepared by:

Michael S. Thill

ILLINGWORTH & RODKIN, INC.
Acoustics • Air Quality
429 East Cotati Avenue
Cotati, CO 94931
(707) 794-0400

I&R Job No.: 21-084

INTRODUCTION

The South Milpitas Boulevard Bridge project proposes to construct a bridge across Penitencia East Channel. The proposed bridge would serve vehicles, pedestrians, and cyclists and would connect South Milpitas Boulevard on the north side of the channel with Tarob Court and Sango Court on the south side of the channel. The proposed project would require demolition of the existing vacant office building located at 1831-1841 Tarob Court (APN 086-36-030) which is owned by the City of Milpitas.

This report evaluates the project's potential to result in significant environmental noise or vibration impacts with respect to applicable California Environmental Quality Act (CEQA) guidelines. The report is divided into two sections: 1) the Setting Section provides a brief description of the fundamentals of environmental noise and groundborne vibration, summarizes applicable regulatory criteria, and discusses the results of the ambient noise monitoring survey completed to document existing noise conditions; and 2) the Impacts and Mitigation Measures Section describes the significance criteria used to evaluate project impacts, provides a discussion of each project impact, and presents measures, where necessary, to mitigate the impacts to a less-than-significant level.

SETTING

Fundamentals of Environmental Noise

Noise may be defined as unwanted sound. Noise is usually objectionable because it is disturbing or annoying. The objectionable nature of sound could be caused by its *pitch* or its *loudness*. *Pitch* is the height or depth of a tone or sound, depending on the relative rapidity (*frequency*) of the vibrations by which it is produced. Higher pitched signals sound louder to humans than sounds with a lower pitch. *Loudness* is intensity of sound waves combined with the reception characteristics of the ear. Intensity may be compared with the height of an ocean wave in that it is a measure of the amplitude of the sound wave.

In addition to the concepts of pitch and loudness, there are several noise measurement scales which are used to describe noise in a particular location. A *decibel (dB)* is a unit of measurement which indicates the relative amplitude of a sound. The zero on the decibel scale is based on the lowest sound level that the healthy, unimpaired human ear can detect. Sound levels in decibels are calculated on a logarithmic basis. An increase of 10 decibels represents a ten-fold increase in acoustic energy, while 20 decibels is 100 times more intense, 30 decibels is 1,000 times more intense, etc. There is a relationship between the subjective noisiness or loudness of a sound and its intensity. Each 10 decibel increase in sound level is perceived as approximately a doubling of loudness over a fairly wide range of intensities. Technical terms are defined in Table 1.

There are several methods of characterizing sound. The most common in California is the *A-weighted sound level (dBA).* This scale gives greater weight to the frequencies of sound to which the human ear is most sensitive. Representative outdoor and indoor noise levels in units of dBA are shown in Table 2. Because sound levels can vary markedly over a short period of time, a method for describing either the average character of the sound or the statistical behavior of the

variations must be utilized. Most commonly, environmental sounds are described in terms of an average level that has the same acoustical energy as the summation of all the time-varying events. This *energy-equivalent sound/noise descriptor* is called L_{eq}. The most common averaging period is hourly, but L_{eq} can describe any series of noise events of arbitrary duration.

The scientific instrument used to measure noise is the sound level meter. Sound level meters can accurately measure environmental noise levels to within about plus or minus 1 dBA. Various computer models are used to predict environmental noise levels from sources, such as roadways and airports. The accuracy of the predicted models depends upon the distance the receptor is from the noise source. Close to the noise source, the models are accurate to within about plus or minus 1 to 2 dBA.

Since the sensitivity to noise increases during the evening and at night -- because excessive noise interferes with the ability to sleep -- 24-hour descriptors have been developed that incorporate artificial noise penalties added to quiet-time noise events. The *Community Noise Equivalent Level* (*CNEL*) is a measure of the cumulative noise exposure in a community, with a 5 dB penalty added to evening (7:00 pm - 10:00 pm) and a 10 dB addition to nocturnal (10:00 pm - 7:00 am) noise levels. The *Day/Night Average Sound Level* (*DNL* or L_{dn}) is essentially the same as CNEL, with the exception that the evening time period is dropped and all occurrences during this three-hour period are grouped into the daytime period.

Effects of Noise

Sleep and Speech Interference

The thresholds for speech interference indoors are about 45 dBA if the noise is steady and above 55 dBA if the noise is fluctuating. Outdoors the thresholds are about 15 dBA higher. Steady noises of sufficient intensity (above 35 dBA) and fluctuating noise levels above about 45 dBA have been shown to affect sleep. Interior residential standards for multi-family dwellings are set by the State of California at 45 dBA L_{dn}. Typically, the highest steady traffic noise level during the daytime is about equal to the L_{dn} and nighttime levels are 10 dB lower. The standard is designed for sleep and speech protection and most jurisdictions apply the same criterion for all residential uses. Typical structural attenuation is 12 to 17 dB with open windows. With standard construction and closed windows in good condition, the noise attenuation factor is around 20 dB for an older structure and 25 dB for a newer dwelling. Sleep and speech interference is therefore of concern when exterior noise levels are about 57 to 62 dBA L_{dn} with open windows and 65 to 70 dBA L_{dn} if the windows are closed. Levels of 55 to 60 dBA are common along collector streets and secondary arterials, while 65 to 70 dBA is a typical value for a primary/major arterial. Levels of 75 to 80 dBA are normal noise levels at the first row of development outside a freeway right-of-way. In order to achieve an acceptable interior noise environment, bedrooms facing secondary roadways need to be able to have their windows closed, those facing major roadways and freeways typically need special glass windows.

Annoyance

Attitude surveys are used for measuring the annoyance felt in a community for noises intruding into homes or affecting outdoor activity areas. In these surveys, it was determined that the causes for annoyance include interference with speech, radio and television, house vibrations, and interference with sleep and rest. The L_{dn} as a measure of noise has been found to provide a valid correlation of noise level and the percentage of people annoyed. People have been asked to judge the annoyance caused by aircraft noise and ground transportation noise. There continues to be disagreement about the relative annoyance of these different sources. When measuring the percentage of the population highly annoyed, the threshold for ground vehicle noise is about 50 dBA L_{dn}. At a L_{dn} of about 60 dBA, approximately 12 percent of the population is highly annoyed. When the L_{dn} increases to 70 dBA, the percentage of the population highly annoyed increases to about 25-30 percent of the population. There is, therefore, an increase of about 2 percent per dBA between a L_{dn} of 60-70 dBA. Between a L_{dn} of 70-80 dBA, each decibel increase increases by about 3 percent the percentage of the population highly annoyed. People appear to respond more adversely to aircraft noise. When the L_{dn} is 60 dBA, approximately 30-35 percent of the population is believed to be highly annoyed. Each decibel increase to 70 dBA adds about 3 percentage points to the number of people highly annoyed. Above 70 dBA, each decibel increase results in about a 4 percent increase in the percentage of the population highly annoyed.

TABLE 1 Definition of Acoustical Terms Used in this Report

Term	Definition
Decibel, dB	A unit describing, the amplitude of sound, equal to 20 times the logarithm to the base 10 of the ratio of the pressure of the sound measured to the reference pressure. The reference pressure for air is 20 micro Pascals.
Sound Pressure Level	Sound pressure is the sound force per unit area, usually expressed in micro Pascals (or 20 micro Newtons per square meter), where 1 Pascal is the pressure resulting from a force of 1 Newton exerted over an area of 1 square meter. The sound pressure level is expressed in decibels as 20 times the logarithm to the base 10 of the ratio between the pressures exerted by the sound to a reference sound pressure (e. g., 20 micro Pascals). Sound pressure level is the quantity that is directly measured by a sound level meter.
Frequency, Hz	The number of complete pressure fluctuations per second above and below atmospheric pressure. Normal human hearing is between 20 Hz and 20,000 Hz. Infrasonic sound are below 20 Hz and Ultrasonic sounds are above 20,000 Hz.
A-Weighted Sound Level, dBA	The sound pressure level in decibels as measured on a sound level meter using the A-weighting filter network. The A-weighting filter de-emphasizes the very low and very high frequency components of the sound in a manner similar to the frequency response of the human ear and correlates well with subjective reactions to noise.
Equivalent Noise Level, L_{eq}	The average A-weighted noise level during the measurement period.
L_{max}, L_{min}	The maximum and minimum A-weighted noise level during the measurement period.
L_{01}, L_{10}, L_{50}, L_{90}	The A-weighted noise levels that are exceeded 1%, 10%, 50%, and 90% of the time during the measurement period.
Day/Night Noise Level, DNL or L_{dn}	The average A-weighted noise level during a 24-hour day, obtained after addition of 10 decibels to levels measured in the night between 10:00 pm and 7:00 am.
Community Noise Equivalent Level, CNEL	The average A-weighted noise level during a 24-hour day, obtained after addition of 5 decibels in the evening from 7:00 pm to 10:00 pm and after addition of 10 decibels to sound levels measured in the night between 10:00 pm and 7:00 am.
Ambient Noise Level	The composite of noise from all sources near and far. The normal or existing level of environmental noise at a given location.
Intrusive	That noise which intrudes over and above the existing ambient noise at a given location. The relative intrusiveness of a sound depends upon its amplitude, duration, frequency, and time of occurrence and tonal or informational content as well as the prevailing ambient noise level.

Source: Handbook of Acoustical Measurements and Noise Control, Harris, 1998.

TABLE 2 Typical Noise Levels in the Environment

Common Outdoor Activities	Noise Level (dBA)	Common Indoor Activities
	110 dBA	Rock band
Jet fly-over at 1,000 feet		
	100 dBA	
Gas lawn mower at 3 feet		
	90 dBA	
Diesel truck at 50 feet at 50 mph		Food blender at 3 feet
	80 dBA	Garbage disposal at 3 feet
Noisy urban area, daytime		
Gas lawn mower, 100 feet	70 dBA	Vacuum cleaner at 10 feet
Commercial area		Normal speech at 3 feet
Heavy traffic at 300 feet	60 dBA	
		Large business office
Quiet urban daytime	50 dBA	Dishwasher in next room
Quiet urban nighttime	40 dBA	Theater, large conference room
Quiet suburban nighttime		
	30 dBA	Library
Quiet rural nighttime		Bedroom at night, concert hall (background)
	20 dBA	
		Broadcast/recording studio
	10 dBA	
	0 dBA	

Source: Technical Noise Supplement (TeNS), California Department of Transportation, September 2013.

Fundamentals of Groundborne Vibration

Ground vibration consists of rapidly fluctuating motions or waves with an average motion of zero. Several different methods are typically used to quantify vibration amplitude. One method is the Peak Particle Velocity (PPV). The PPV is defined as the maximum instantaneous positive or negative peak of the vibration wave. In this report, a PPV descriptor with units of mm/sec or in/sec is used to evaluate construction generated vibration for building damage and human complaints. Table 3 displays the reactions of people and the effects on buildings that continuous or frequent intermittent vibration levels produce. The guidelines in Table 3 represent syntheses of vibration criteria for human response and potential damage to buildings resulting from construction vibration.

Construction activities can cause vibration that varies in intensity depending on several factors. The use of pile driving and vibratory compaction equipment typically generates the highest construction related groundborne vibration levels. Because of the impulsive nature of such activities, the use of the PPV descriptor has been routinely used to measure and assess groundborne vibration and almost exclusively to assess the potential of vibration to cause damage and the degree of annoyance for humans.

The two primary concerns with construction-induced vibration, the potential to damage a structure and the potential to interfere with the enjoyment of life, are evaluated against different vibration limits. Human perception to vibration varies with the individual and is a function of physical setting and the type of vibration. Persons exposed to elevated ambient vibration levels, such as people in an urban environment, may tolerate a higher vibration level.

Structural damage can be classified as cosmetic only, such as paint flaking or minimal extension of cracks in building surfaces; minor, including limited surface cracking; or major, that may threaten the structural integrity of the building. Safe vibration limits that can be applied to assess the potential for damaging a structure vary by researcher. The damage criteria presented in Table 3 include several categories for ancient, fragile, and historic structures, the types of structures most at risk to damage. Most buildings are included within the categories ranging from “Historic and some old buildings” to “Modern industrial/commercial buildings”. Construction-induced vibration that can be detrimental to the building is very rare and has only been observed in instances where the structure is at a high state of disrepair and the construction activity occurs immediately adjacent to the structure.

The annoyance levels shown in Table 3 should be interpreted with care since vibration may be found to be annoying at lower levels than those shown, depending on the level of activity or the sensitivity of the individual. To sensitive individuals, vibrations approaching the threshold of perception can be annoying. Low-level vibrations frequently cause irritating secondary vibration, such as a slight rattling of windows, doors, or stacked dishes. The rattling sound can give rise to exaggerated vibration complaints, even though there is very little risk of actual structural damage.

TABLE 3 Reaction of People and Damage to Buildings from Continuous or Frequent Intermittent Vibration Levels

Velocity Level, PPV (in/sec)	Human Reaction	Effect on Buildings
0.01	Barely perceptible	No effect
0.04	Distinctly perceptible	Vibration unlikely to cause damage of any type to any structure
0.08	Distinctly perceptible to strongly perceptible	Recommended upper level of the vibration to which ruins and ancient monuments should be subjected
0.1	Strongly perceptible	Threshold at which there is a risk of damage to fragile buildings with no risk of damage to most buildings
0.25	Strongly perceptible to severe	Threshold at which there is a risk of damage to historic and some old buildings.
0.3	Strongly perceptible to severe	Threshold at which there is a risk of damage to older residential structures
0.5	Severe - Vibrations considered unpleasant	Threshold at which there is a risk of damage to new residential and modern commercial/industrial structures

Source: Transportation and Construction Vibration Guidance Manual, California Department of Transportation, April 2020.

Regulatory Background

The State of California and the City of Milpitas have established regulatory criteria that are applicable in this assessment. The California Environmental Quality Act (CEQA) Guidelines, Appendix G, are used to assess the potential significance of impacts pursuant to local General Plan policies, Municipal Code standards, or the applicable standards of other agencies. A summary of the applicable regulatory criteria is provided below.

State CEQA Guidelines. The CEQA contains guidelines to evaluate the significance of effects of environmental noise attributable to a proposed project. Under CEQA, noise impacts would be considered significant if the project would result in:

(a) Generation of a substantial temporary or permanent increase in ambient noise levels in the vicinity of the project in excess of standards established in the local general plan or noise ordinance, or applicable standards of other agencies;

(b) Generation of excessive groundborne vibration or groundborne noise levels;

(c) For a project located within the vicinity of a private airstrip or an airport land use plan or where such a plan has not been adopted within two miles of a public airport

or public use airport, if the project would expose people residing or working in the project area to excessive noise levels.

City of Milpitas General Plan 2040. The primary goal of the Noise Element is to preserve a nuisance-free noise environment for existing and future land uses by minimizing exposure to harmful and excessive noise levels. The following policies and action items are applicable to the proposed project:

N 1-1 Consider the noise compatibility of existing and future development when making land use planning decisions. Require development and infrastructure projects to be consistent with the land use compatibility standards contained in Tables N-1 and N-2 to ensure acceptable noise exposure levels for existing and future development.

N 1-2 Require new development to mitigate excessive noise to the standards indicated in Tables N-1 and N-2 through best practices, including building location and orientation, building design features, placement of noise-generating equipment away from sensitive receptors, shielding of noise-generating equipment, placement of noise-tolerant features between noise sources and sensitive receptors, and use of noise-minimizing materials.

N 1-3 Use sound walls for sound attenuation only when other measures are not practical, or when recommended by an acoustical expert as part of a mitigation measure. Sound walls shall be designed to be aesthetically pleasing, and should incorporate features such as vegetation, variations in color and texture, artwork, and other features deemed appropriate by the City.

N 1-5 Require acoustical studies for new discretionary developments and transportation improvements that have the potential to affect existing noise-sensitive uses such as schools, hospitals, libraries, care facilities, and residential areas; and for projects that would introduce new noise-sensitive uses into an area where existing noise levels may exceed the thresholds identified in this element.

N 1-6 For projects that are required to prepare an acoustical study to analyze noise impacts, the following criteria shall be used to determine the significance of those impacts:

TRANSPORTATION NOISE SOURCES

- Where existing traffic noise levels are 60 dB Ldn or less at the outdoor activity areas of noise-sensitive uses, a +5 dB Ldn increase in roadway noise levels will be considered significant;

- Where existing traffic noise levels are greater than 60 dB Ldn and up to 65 dB Ldn at the outdoor activity areas of noise-sensitive uses, a +3 dB Ldn increase in roadway noise levels will be considered significant; and

- Where existing traffic noise levels are greater than 65 dB Ldn at the outdoor activity areas of noise-sensitive uses, a + 1.5 dB Ldn increase in roadway noise levels will be considered significant.

N 1-8 Require construction activities to comply with standard best practices to reduce noise exposure to adjacent sensitive receptors (see Action N 1d).

N 1-9 Implement a range of traffic control measures, including but not limited to, light timing, asphalt alternatives (such as rubberized asphalt), and speed reduction measures to reduce roadway noise.

Action N-1a Require that new development projects are reviewed for compliance with the noise requirements established in this element, including the standards established in Tables N1 and N-2, prior to project approval.

Action N-1b Require acoustical studies for new development projects which have the potential to generate noise impacts which exceed the standards identified in this element. The studies shall include representative noise measurements, estimates of existing and projected noise levels, and mitigation measures necessary to ensure compliance with the noise standards included in this element. Studies shall be conducted by a qualified acoustical professional.

Action N-1c Require developers to prepare a construction management/noise mitigation plan that defines best management practices to reduce construction noise, and includes proposed truck routes (that comply with Section 12 V-100-12.05 - Truck Routes of the Milpitas Municipal Code) as part of the entitlement process.

Action N-1d During the environmental review process, determine if proposed construction will constitute a significant impact on nearby sensitive receptors and, if necessary, require mitigation measures in addition to the standard best practice controls. Suggested best practices for control of construction noise include:

- Noise-generating construction activities, including truck traffic coming to and from the construction site for any purpose, shall be limited to between the hours of 7:00 am and 7:00 pm. No construction shall occur on National holidays.

- All equipment driven by internal combustion engines shall be equipped with mufflers, which are in good condition and appropriate for the equipment.

- The construction contractor shall utilize “quiet” models of air compressors and other stationary noise sources where technology exists.

- At all times during project grading and construction, stationary noise-generating equipment shall be located as far as practicable from sensitive receptors and placed so that emitted noise is directed away from residences.

- Unnecessary idling of internal combustion engines shall be prohibited for a duration of longer than five minutes.

- Construction staging areas shall be established at locations that will create the greatest distance between the construction-related noise sources and noise-sensitive receptors nearest the project site during all project construction activities, to the extent feasible.

- Neighbors located adjacent to the construction site shall be notified of the construction schedule in writing.

- The construction contractor shall designate a "noise disturbance coordinator" who will be responsible for responding to any local complaints about construction noise. The disturbance coordinator shall be responsible for determining the cause of the noise complaint (e.g., starting too early, poor muffler, etc.) and instituting reasonable measures as warranted to correct the problem. A telephone number for the disturbance coordinator shall be conspicuously posted at the construction site.

Action N-1f Petition State and Regional agencies to install "quiet pavement" materials during roadway improvement and resurfacing activities. Utilize quiet pavement materials on City-owned streets to the greatest extent feasible.

City of Milpitas Municipal Code. Chapter 213 of the City's Zoning Ordinance contains a Noise Abatement Section that limits noise levels at adjacent properties. Code Section V-213-3 limits construction operations to between the hours of 7:00 am and 7:00 pm on weekdays and weekends. No construction is permitted on holidays.

Existing Noise Environment

Figure 1 shows the project boundary and existing land uses superimposed on an aerial image of the project site. The proposed bridge would extend South Milpitas Boulevard across Penitencia East Channel, at which point, South Milpitas Boulevard would connect with Tarob Court and Sango Court.

A noise monitoring survey was conducted between Tuesday, October 12, 2021 and Thursday, October 14, 2021. The noise monitoring survey included two long-term noise measurements (LT-1 and LT-2) and two short-term noise measurement (ST-1 and ST-2). Noise measurement locations are shown in Figure 1 and the daily trends in noise levels for the long-term measurements are shown in Figures 2 and 3. The noise environment in the project vicinity results primarily from vehicular traffic along Sango Court, Tarob Court, South Milpitas Boulevard, East Capitol Avenue and Montague Expressway and from commercial activities at properties accessed via Sango Court and Tarob Court.

Long-term noise measurement LT-1 was made in front of 1972 Tarob Court, near existing multi-family housing. Hourly average noise levels at this location typically ranged from 42 to 60 dBA L_{eq} throughout the day and at night. Daytime maximum instantaneous noise levels typically ranged from 65 to 80 dBA L_{max}. The calculated day-night average noise level ranged from 61 to 65 dBA L_{dn}. High maximum instantaneous noise levels were noted during the 5:00 am, 4:00 pm, and 8:00 pm hours, which increased the hourly average noise levels during those same hours by 5 to 10

dBA above typical conditions. When removing just the 5:00 am hour from the data set, the calculated L_{dn} decreased by 4 dBA and ranged from 57 to 61 dBA L_{dn}.

Long-term noise measurement LT-2 was made at the north end of Expedition Lane to quantify ambient noise levels at nearby residential and park land uses. Hourly average noise levels at this location typically ranged from 43 to 58 dBA L_{eq}, and maximum instantaneous noise levels typically ranged from 60 to 75 dBA L_{max}. The day-night average noise level was 56 dBA L_{dn} over the course of the measurement period.

Two short-term noise measurements were made to supplement the long-term data. Table 4 summarizes the results of the short-term noise measurements

TABLE 4 Summary of Short-Term Noise Measurements (dBA)

Noise Measurement Location	Date, Time	Measured Noise Level, dBA					
		L_{max}	$L_{(1)}$	$L_{(10)}$	$L_{(50)}$	$L_{(90)}$	L_{eq}
ST-1: South end of S. Milpitas Boulevard near Ascend Apartments	10/12/2021, 12:40-12:50	63	60	55	50	48	52
ST-2: In front of 308 Sango Court	10/12/2021, 12:40-12:50	75	69	59	54	51	58

Source: Illingworth & Rodkin, Inc., 2021.

FIGURE 1 Aerial Photograph, Surrounding Land Uses, and Noise Measurement Locations

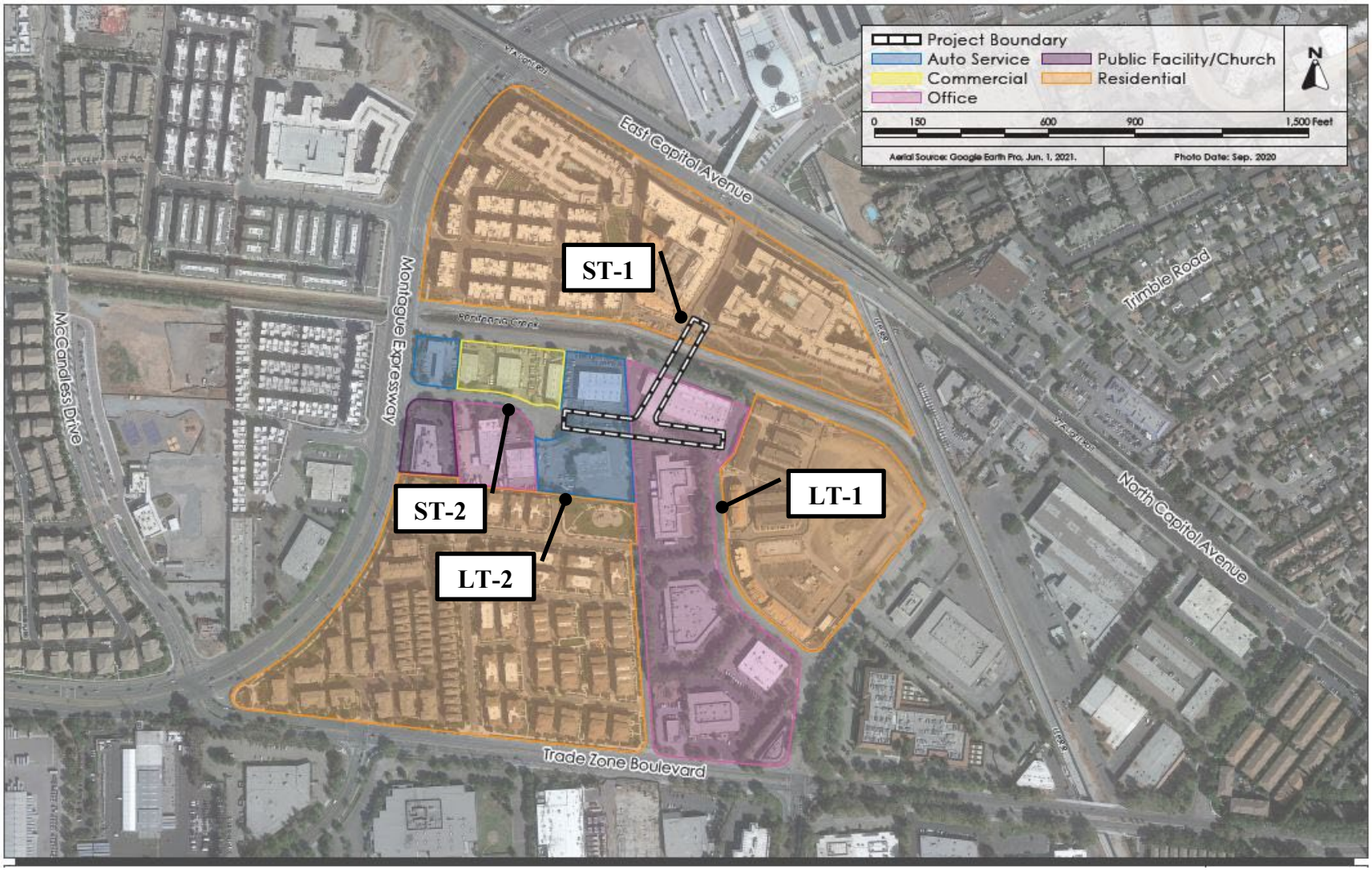

FIGURE 2 Daily Trend in Noise Levels at LT-1

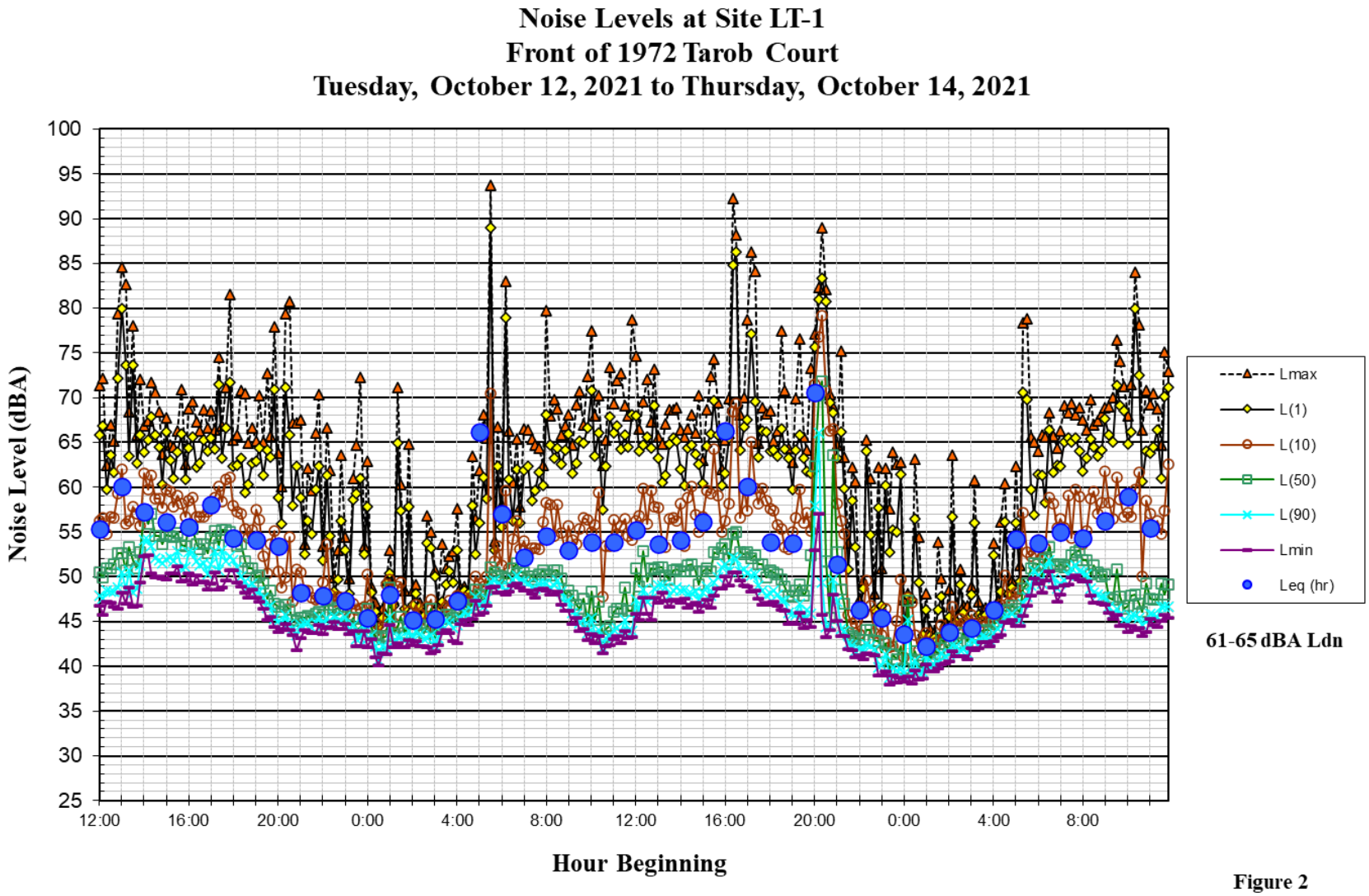

FIGURE 3 Daily Trend in Noise Levels at LT-2

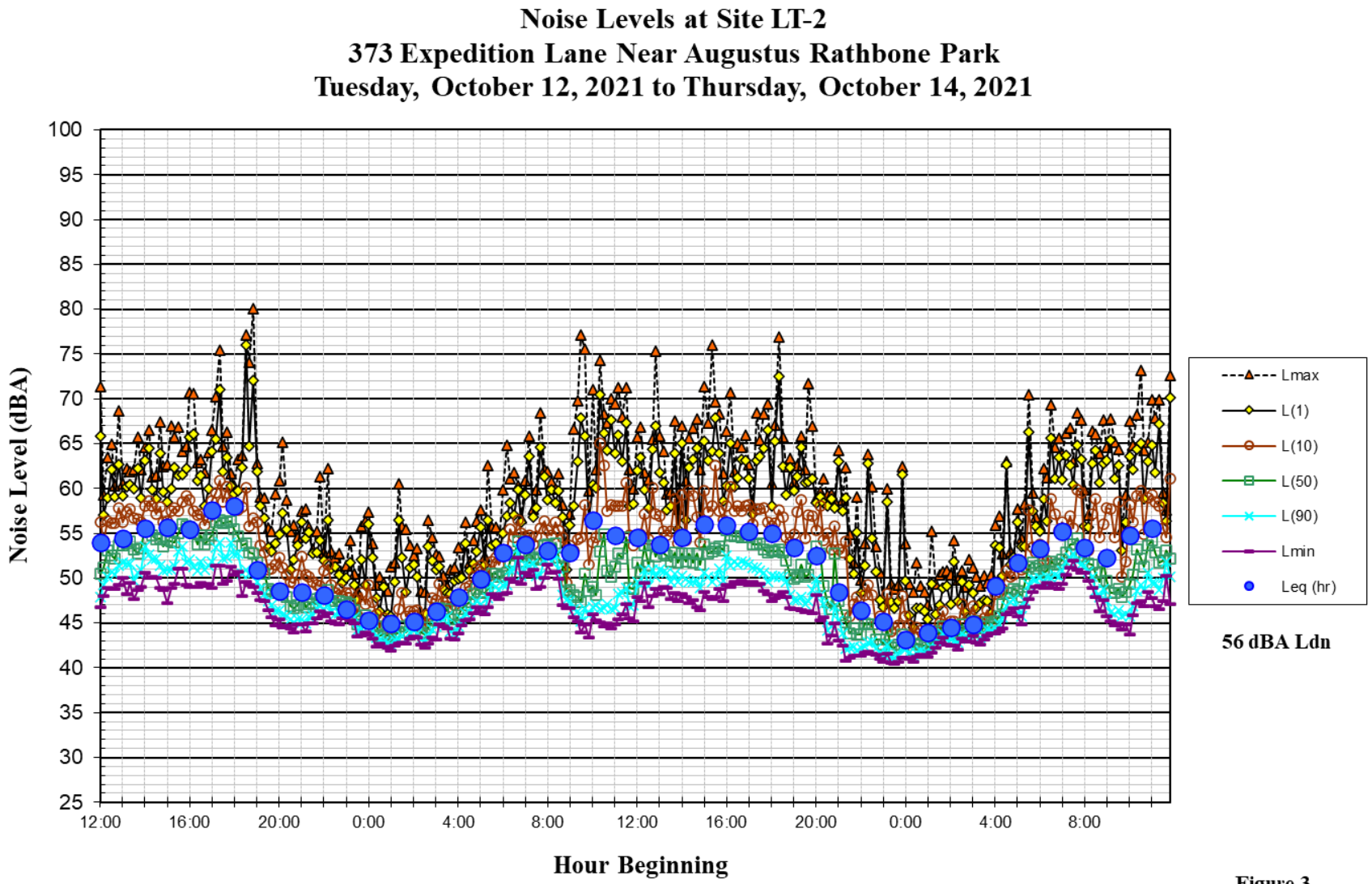

Figure 3

NOISE IMPACTS AND MITIGATION MEASURES

This section describes the significance criteria used to evaluate project impacts under CEQA, provides a discussion of each project impact, and presents mitigation measures, where necessary, to provide a compatible project in relation to adjacent noise sources and land uses.

Significance Criteria

The following criteria were used to evaluate the significance of environmental noise resulting from the project:

- A significant noise impact would be identified if the project would generate a substantial temporary or permanent noise level increase over ambient noise levels at existing noise-sensitive receptors surrounding the project site and that would exceed applicable noise standards presented in the General Plan or Municipal Code at existing noise-sensitive receptors surrounding the project site.
    - A significant temporary noise impact would be identified if construction would occur outside of the hours specified in the Municipal Code.
    - A significant permanent noise level increase would occur if project-generated traffic would result in a noise level increase of more than 5 dBA L_{dn} where existing traffic noise levels are 60 dBA L_{dn} or less.
    - A significant permanent noise level increase would occur if project-generated traffic would result in a noise level increase of more than 3 dBA L_{dn} where existing traffic noise levels are greater than 60 dBA L_{dn} and up to 65 dBA L_{dn}.
    - A significant permanent noise level increase would occur if project-generated traffic would result in a noise level increase of more than 1.5 dBA L_{dn} where existing traffic noise levels are greater than 65 dBA L_{dn}.
    - A significant noise impact would be identified if the project would expose persons to or generate noise levels that would exceed applicable noise standards presented in the General Plan or Municipal Code.
- A significant impact would be identified if the construction of the project would generate excessive vibration levels surrounding receptors. Groundborne vibration levels exceeding 0.3 in/sec PPV would have the potential to result in cosmetic damage to normal buildings.
- A significant noise impact would be identified if the project would expose people residing or working in the project area to excessive aircraft noise levels.

Impact 1a: **Temporary Construction Noise.** Existing noise-sensitive land uses would be exposed to a temporary increase in construction noise levels, but construction would be conducted during allowable hours and standard best practices would be implemented during all phases of project construction to reduce the impact to a **less-than-significant level**.

Demolition and construction activities proposed by the project are anticipated to last approximately 18 months. Construction of the bridge would take place in a single dry season from June 15 to October 15, 2023, as required by Valley Water. Demolition of the existing building and construction of the proposed roadway connection would occur between Spring 2023 and Fall 2024. Construction work would occur between 7:00 a.m. and 7:00 p.m., Monday through Sunday, excluding holidays consistent with the City's Municipal Code Section V-213-3(b).

No pile driving is required for the project. Equipment may include, but is not limited to graders, scrapers, dozers, backhoes, excavators, lo-drills, haul trucks, concrete pump trucks, concrete mixing trucks, telehandlers, cranes, manlifts, and pickup trucks.

Noise impacts resulting from construction depend upon the noise generated by various pieces of construction equipment, the timing and duration of noise-generating activities, and the distance between construction noise sources and noise-sensitive areas. Construction noise impacts primarily result when construction activities occur during noise-sensitive times of the day (e.g., early morning, evening, or nighttime hours), the construction occurs in areas immediately adjoining noise-sensitive land uses, or when construction lasts over extended periods of time.

Construction activities generate considerable amounts of noise, especially during earth-moving activities when heavy equipment is used. The highest maximum noise levels generated by project construction would typically range from about 80 to 90 dBA L_{max} at a distance of 50 feet from the noise source. Table 5 shows the hourly average noise level ranges, by construction phase for various types of construction projects. A list of typical maximum instantaneous noise levels measured at 50 feet are provided in Table 6. Typical hourly average construction-generated noise levels for public works projects are about 79 to 88 dBA L_{eq}, as measured at a distance of 50 feet from the center of the site during busy construction periods (e.g., earth moving equipment, impact tools, etc.). Construction-generated noise levels drop off at a rate of about 6 dBA per doubling of the distance between the source and receptor. Shielding by buildings or terrain can provide an additional 5 to 10 dBA noise reduction at distant receptors.

TABLE 5 Typical Ranges of Construction Noise Levels at 50 Feet, L_{eq} (dBA)

	Domestic Housing		Office Building, Hotel, Hospital, School, Public Works		Industrial Parking Garage, Religious Amusement & Recreations, Store, Service Station		Public Works Roads & Highways, Sewers, and Trenches	
	I	II	I	II	I	II	I	II
Ground Clearing	83	83	84	84	84	83	84	84
Excavation	88	75	89	79	89	71	88	78
Foundations	81	81	78	78	77	77	88	88
Erection	81	65	87	75	84	72	79	78
Finishing	88	72	89	75	89	74	84	84

I - All pertinent equipment present at site.
II - Minimum required equipment present at site.

Source: U.S.E.P.A., Legal Compilation on Noise, Vol. 1, p. 2-104, 1973.

TABLE 6 Construction Equipment 50-foot Noise Emission Limits

Equipment Category	L_{max} Level (dBA)1,2	Impact/Continuous
Arc Welder	73	Continuous
Auger Drill Rig	85	Continuous
Backhoe	80	Continuous
Bar Bender	80	Continuous
Boring Jack Power Unit	80	Continuous
Chain Saw	85	Continuous
Compressor[3]	70	Continuous
Compressor (other)	80	Continuous
Concrete Mixer	85	Continuous
Concrete Pump	82	Continuous
Concrete Saw	90	Continuous
Concrete Vibrator	80	Continuous
Crane	85	Continuous
Dozer	85	Continuous
Excavator	85	Continuous
Front End Loader	80	Continuous
Generator	82	Continuous
Generator (25 KVA or less)	70	Continuous
Gradall	85	Continuous
Grader	85	Continuous
Grinder Saw	85	Continuous
Horizontal Boring Hydro Jack	80	Continuous
Hydra Break Ram	90	Impact
Impact Pile Driver	105	Impact
Insitu Soil Sampling Rig	84	Continuous
Jackhammer	85	Impact

Equipment Category	L_{max} Level (dBA)1,2	Impact/Continuous
Mounted Impact Hammer (hoe ram)	90	Impact
Paver	85	Continuous
Pneumatic Tools	85	Continuous
Pumps	77	Continuous
Rock Drill	85	Continuous
Scraper	85	Continuous
Slurry Trenching Machine	82	Continuous
Soil Mix Drill Rig	80	Continuous
Street Sweeper	80	Continuous
Tractor	84	Continuous
Truck (dump, delivery)	84	Continuous
Vacuum Excavator Truck (vac-truck)	85	Continuous
Vibratory Compactor	80	Continuous
Vibratory Pile Driver	95	Continuous
All other equipment with engines larger than 5 HP	85	Continuous

Notes:

1 Measured at 50 feet from the construction equipment, with a "slow" (1 sec.) time constant.

2 Noise limits apply to total noise emitted from equipment and associated components operating at full power while engaged in its intended operation.

3 Portable Air Compressor rated at 75 cfm or greater and that operates at greater than 50 psi.

The Federal Highway Administration's (FHWA's) Roadway Construction Noise Model (RCNM) was used to calculate the hourly average noise levels anticipated for the worst-case scenario for each construction phase, based on the equipment list provided by the applicant at the time of this study. RCNM includes representative sound levels for the most common types of construction equipment and the approximate usage factors of such equipment that were developed based on an extensive database of information gathered during the construction of the Central Artery/Tunnel Project in Boston, Massachusetts (CA/T Project or "Big Dig"). The usage factors represent the percentage of time that the equipment would be operating at full power. To estimate the worst-case scenario for each phase of the proposed project, it was assumed that all equipment provided for each phase would operate simultaneously. RCNM calculated construction noise levels ranging from 84 to 86 dBA L_{eq} at a distance of 50 feet from the source, which corresponded well with the EPA's typical range of construction noise levels for domestic housing.

Table 7 summarizes all equipment and quantities expected to be used for each construction phase, the duration of each phase, and the estimated worst-case scenario noise levels expected at the property lines of the nearest surrounding noise-sensitive land use. Construction equipment would likely be spread throughout the sites, but for purposes of modeling the worst-case scenario, all equipment was assumed to be operating in relatively the same area, with the geometrical center of construction equipment being the center of the construction site. Therefore, the propagation distances were estimated from the center of the active construction site to the property lines of the surrounding receptors. No shielding effects were assumed for the estimated noise levels shown in Table 7.

TABLE 7 Estimated Construction Noise Levels at Nearby Land Uses

Phase	Construction Equipment (Quantity)	Calculated Hourly Average L_{eq}, dBA			
		Source (50 feet)	West Commercial (180 ft)	North Residential (200 ft)	East and South Residential/ Commercial (300 ft)
Demolition	Concrete/Industrial Saw (1) Excavator (1) Rubber Tired Dozer (1) Tractor/Loader/Backhoe (1)	86	75	74	70
Site Preparation	Grader (1) Rubber Tired Dozer (1) Tractor/Loader/Backhoe (1)	85	74	73	69
Grading/ Excavation	Excavator (1) Grader (1) Rubber Tired Dozer (1) Tractors/Loaders/Backhoes (2)	86	75	74	70
Paving	Cement and Mortar Mixer (1) Paver (1) Paving Equipment (1) Roller (1) Tractor/Loader/Backhoe (1)	84	73	72	68
Bridge Construction	Drill Rig (1) Tractors/Loaders/Backhoes (2) Crane (1) Forklift (1) Cement and Mortar Mixers (3) Aerial Lift (1) Concrete Boom Pump (1)	85	74	73	69

The nearest commercial receptors to the west (approximately 180 feet from the acoustic center of the project site) would be exposed to average construction noise levels ranging from 73 to 75 dBA L_{eq}, and the nearest commercial receptors to the south (approximately 300 feet from the acoustic center of the project site) would be exposed to average construction noise levels ranging from 68 to 70 dBA L_{eq}. The nearest residential land uses would be approximately 200 feet north or 300 feet east and would be exposed to average construction noise levels ranging from 68 to 74 dBA L_{eq}.

General Plan Action N-1d suggests the following best practices for control of construction noise:

- Noise-generating construction activities, including truck traffic coming to and from the construction site for any purpose, shall be limited to between the hours of 7:00 am and 7:00 pm. No construction shall occur on National holidays.

- All equipment driven by internal combustion engines shall be equipped with mufflers, which are in good condition and appropriate for the equipment.

- The construction contractor shall utilize "quiet" models of air compressors and other stationary noise sources where technology exists.

- At all times during project grading and construction, stationary noise-generating equipment shall be located as far as practicable from sensitive receptors and placed so that emitted noise is directed away from residences.

- Unnecessary idling of internal combustion engines shall be prohibited for a duration of longer than five minutes.

- Construction staging areas shall be established at locations that will create the greatest distance between the construction-related noise sources and noise-sensitive receptors nearest the project site during all project construction activities, to the extent feasible.

- Neighbors located adjacent to the construction site shall be notified of the construction schedule in writing.

- The construction contractor shall designate a "noise disturbance coordinator" who will be responsible for responding to any local complaints about construction noise. The disturbance coordinator shall be responsible for determining the cause of the noise complaint (e.g., starting too early, poor muffler, etc.) and instituting reasonable measures as warranted to correct the problem. A telephone number for the disturbance coordinator shall be conspicuously posted at the construction site.

The above standard construction best management practices can be incorporated into the project specifications to reduce noise levels emanating from the site and to minimize disruption and annoyance at existing noise-sensitive receptors in the project vicinity. Reasonable regulation of the hours of construction, as well as regulation of the arrival and operation of heavy equipment and the delivery of construction material, are necessary to protect the health and safety of persons, promote the general welfare of the community, and maintain the quality of life. Implementation of the above standard construction controls would reduce construction noise levels emanating from the site, minimizing disruption and annoyance. The implementation of these standard controls would reduce the impact to a less-than-significant level.

Impact 1b: **Permanent Noise Level Increase.** The proposed project is not expected to cause a substantial permanent traffic noise level increase at the existing residential land uses in the project vicinity. **This is a less-than-significant impact.**

According to the City of Milpitas General Plan a significant impact would occur if the project generated a noise level increase of more than 5 dBA where existing traffic noise levels are 60 dBA L_{dn} or less, an increase of 3 dBA or more where existing traffic noise levels are greater than 60 dBA L_{dn} and up to 65 dBA L_{dn}, or a noise level increase of more than 1.5 dBA L_{dn} where existing traffic noise levels are greater than 65 dBA L_{dn}. Based on to the long-term noise measurement data, the existing traffic noise levels ranted from 56 dBA L_{dn} to 65 dBA L_{dn}; therefore, a significant impact would occur if traffic due to the proposed project would permanently increase noise levels by up to 3 dBA L_{dn}.

The project's traffic study included AM and PM peak hour traffic volumes for the existing, near term (with and without the project), and 2040 (with and without the project) traffic scenarios. The noise increase attributable to the project was calculated by comparing the near term with project traffic volumes to the near term without project volumes, and the 2040 with project traffic volumes to the 2040 without project volumes. Based on these comparisons, a traffic noise increase of up to 1 dBA L_{dn} would be expected as a result of the project along S. Milpitas Boulevard, south of E. Capital Avenue. Along every other roadway segment included in the traffic study, a noise level increase of less than 1 dBA L_{dn} or less was calculated. This does not represent a significant permanent noise level increase as traffic noise levels would not increase by 3 dBA L_{dn} or more.

In addition, 2040 traffic noise levels with the project were modeled along area roadways to quantify the future noise level anticipated at existing and planned multi-family residential land uses in the project vicinity. The results of the modeling indicated that traffic noise levels would be 60 dBA L_{dn} or less at a distance of 33 feet from the centerline of the roadway. This distance represents the minimum setback of existing and planned multi-family residential land uses in the project vicinity. The predicted future traffic noise levels would fall below the 65 dBA L_{dn} normally acceptable noise and land use compatibility threshold established by the City of Milpitas for new multi-family housing projects, therefore, the proposed project would have a less-than-significant impact on sensitive receptors in the area.

Mitigation Measure 1b: None required.

Impact 2: Generation of Excessive Groundborne Vibration due to Construction. Construction-related vibration levels are not anticipated to exceed 0.3 in/sec PPV at the nearest structures. **This is a less-than-significant impact.**

The City of Milpitas does not specify a construction vibration limit. For structural damage, the California Department of Transportation recommends a vibration limit of 0.5 in/sec PPV for buildings structurally sound and designed to modern engineering standards, 0.3 in/sec PPV for buildings that are found to be structurally sound but where structural damage is a major concern, and a conservative limit of 0.25 in/sec PPV for historic and some old buildings (see Table 3). The 0.5 in/sec PPV threshold would apply to recently constructed buildings to the north (Anton Ascend and Anton Aspire Apartments) and east (Tarob Court Apartments), while the 0.3 in/sec PPV threshold would apply to the remaining buildings to the south and west (existing commercial and industrial buildings).

Table 8 presents typical vibration levels from construction equipment at 25, 50, 75, 100 and 125 feet, which represent distances to existing buildings in the project vicinity. Vibration levels would vary depending on soil conditions, construction methods, and equipment used. Vibration levels are highest close to the source, and then attenuate with increasing distance at the rate $(D_{ref}/D)^{1.1}$, where D is the distance from the source in feet and D_{ref} is the reference distance of 25 feet.

TABLE 8 Vibration Source Levels for Construction Equipment

Equipment		PPV at 25 ft. (in/sec)	PPV at 50 ft. (in/sec)	PPV at 75 ft. (in/sec)	PPV at 100 ft. (in/sec)	PPV at 125 ft. (in/sec)
Clam shovel drop		0.202	0.094	0.060	0.044	0.034
Hydromill (slurry wall)	In soil	0.008	0.004	0.002	0.002	0.001
	In rock	0.017	0.008	0.005	0.004	0.003
Vibratory Roller		0.210	0.098	0.063	0.046	0.036
Hoe Ram		0.089	0.042	0.027	0.019	0.015
Large bulldozer		0.089	0.042	0.027	0.019	0.015
Caisson drilling		0.089	0.042	0.027	0.019	0.015
Loaded trucks		0.076	0.035	0.023	0.017	0.013
Jackhammer		0.035	0.016	0.010	0.008	0.006
Small bulldozer		0.003	0.001	0.001	0.001	0.001

Source: Transit Noise and Vibration Impact Assessment Manual, Federal Transit Administration, Office of Planning and Environment, U.S. Department of Transportation, September 2018, as modified by Illingworth & Rodkin, Inc., October 2021.

Project construction activities, such as drilling, the use of jackhammers, rock drills and other high-power or vibratory tools, and rolling stock equipment (tracked vehicles, compactors, etc.) may generate substantial vibration in the immediate vicinity of construction activities. However, as indicated in Table 8, none of these construction activities would be anticipated to exceed 0.5 in/sec PPV or 0.3 in/sec PPV at the nearest structures as all work would occur at distances of 25 feet or greater. The nearest residential land uses to the north would include the Anton Ascend and Anton Aspire Apartments, and the nearest residential land uses to the east would include the Tarob Court Apartments. These apartments would be as close as 25 to 50 feet from project work areas and exposed to worst-case vibration levels of 0.210 in/sec PPV, which is below the 0.5 in/sec PPV threshold for structurally sound buildings designed to modern engineering standards. Commercial/industrial buildings to the south and west (i.e., 328, 349, 355, and 1700 Sango Court, and 1905 Tarob Court) would also be as close as 25 to 50 feet from project work areas and exposed to worst-case vibration levels of 0.210 in/sec PPV, which is below the 0.3 in/sec PPV threshold for buildings that are found to be structurally sound but where structural damage is a major concern. Vibration levels would attenuate with distance as shown in Table 8, so as work proceeds away from adjacent buildings, the resulting vibration levels would be less. Vibration levels due to demolition and construction activities associated with the project may be perceptible to occupants but would not be anticipated to cause cosmetic or structural damage to the nearest buildings and would not be considered excessive. This is a less-than-significant impact.

Mitigation Measure 2: None required.

Impact 3: Excessive Aircraft Noise. The project site is located approximately 4 miles from the nearest airport, and the proposed project would not expose people working at the site to excessive aircraft noise. **This is a less-than-significant impact.**

Norman Y. Mineta San José International Airport is a public-use airport located approximately 3 miles southwest of the project site. The City of San Jose's Airport Master plan provides the 2037 Norman Y. Mineta San José International Airport noise contour map included in this report as

Figure 4 [1] Figure 4 shows that the project site lies well outside the 2037 60 dBA CNEL noise contour of the airport.. This means future exterior noise levels due to aircraft would not exceed 60 dBA CNEL/L_{dn}. Therefore, the proposed project would not expose people working at the site to excessive aircraft noise. This is a less-than-significant impact.

Mitigation Measure 3: None required.

1 David J. Powers & Associates, Inc., Integrated Final Environmental Impact Report, Amendment to Norman Y. Mineta San Jose International Airport Master Plan, April 2020.

FIGURE 4 2037 CNEL Noise Contours for SJC Relative to Project Site

Figure 5
Scenario 2: With Project 2037 Noise Contour Map

SAN JOSE INTERNATIONAL AIRPORT | Environmental Impact Report FINAL | October 2019

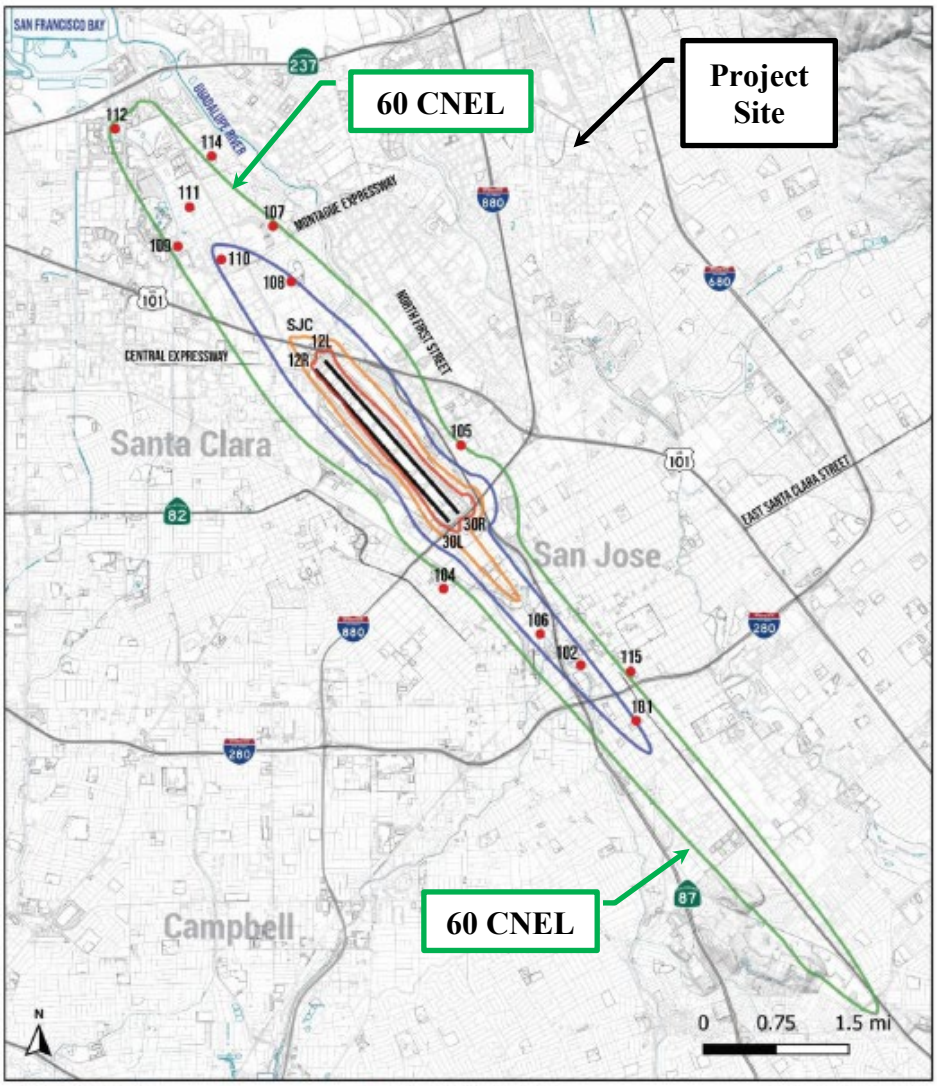

NORMAN Y. MINETA SAN JOSE INTERNATIONAL AIRPORT

- Noise Monitoring Station
- 101 Site ID
- Runway
- 75 dBA and Greater CNEL Contour
- 70 dBA and Greater CNEL Contour
- 65 dBA and Greater CNEL Contour
- 60 dBA and Greater CNEL Contour

Figure 5 Scenario 2: With Project 2037 Noise Contour Map

Source: BridgeNet International 2019

APPENDIX F
Transportation Analysis by Hexagon Transportation Consultant Inc, dated 2021

Hexagon Transportation Consultants, Inc.

Memorandum

Date:	October 1, 2021
To:	City of Milpitas
From:	Brett Walinski, TE Eric Tse, PE, PTOE
Subject:	Transportation Analysis for the Penitencia Creek Bridge Project

Introduction

Hexagon Transportation Consultants, Inc. has completed this transportation analysis for the proposed extension of Milpitas Boulevard over Penitencia Creek. The project would construct a new 2-lane vehicular bridge, with sidewalks and bike space over Penitencia Creek at the end of Milpitas Boulevard, west of Capitol Avenue. The bridge would be part of the Transit Area Specific Plan (TASP) to provide vehicular, bicycle, and pedestrian connectivity between various developments and the Milpitas Transit Center. The proposed bridge would terminate at a proposed roadway connecting Tarob Court and Sango Court, also part of the project. The project location and study intersections are shown on Figure 1, and the proposed bridge cross-section is shown on Figure 2.

This study includes analysis required by the California Environmental Quality Act (CEQA), including vehicle-miles traveled, and impacts to bikes, pedestrians, and transit as well as off-site intersection analysis and circulation analysis, which was requested by City staff to document potential project benefits.

Existing Transportation Setting

The project vicinity is bounded by the major roadways of Montague Expressway, Capitol Avenue, and Trade Zone Boulevard. Within the project area, primary public streets include Sango Court, Tarob Court, Milpitas Boulevard, and Lundy Place. These roadways are described below.

> *Montague Expressway* is an east-west roadway that starts at the intersection of Scott Boulevard and San Tomas Expressway in the west and ends at the intersection of S. Park Victoria Drive/Morrill Avenue and Landess Avenue in the east. This facility is primarily a six to eight lane expressway and connects the following freeways: U.S. Highway 101 (US 101), Interstate 880 (I-880), and Interstate 680 (I-680). During the AM peak period from 6:00 a.m. to 9:00 a.m., one westbound through lane is restricted for high-occupancy vehicle (HOV) use. During the PM peak period from 3:00 p.m. to 7:00 p.m., one eastbound lane is restricted for HOV use. The HOV lanes are discontinued at the US 101 and I-880 interchanges and terminate just west of Great Mall Parkway-Capitol Avenue intersection.

Capitol Avenue is a north-south, six-lane divided arterial roadway in the project vicinity extending from Montague Expressway in the north, where it becomes Great Mall Parkway, to San Jose in the south. It provides direct access to the project area and the Milpitas Transit Center via its intersection with Milpitas Boulevard. Santa Clara Valley Transportation Authority (VTA) light-rail transit (LRT) service is provided along the median of Great Mall Parkway along an elevated platform.

Trade Zone Boulevard is an east-west, four-lane roadway, extending from Montague Expressway in the west to Capitol Avenue in the east. It provides access to the project vicinity via Lundy Place and several local residential streets within the TASP.

Milpitas Boulevard is a two-lane, north-south roadway south of Capitol Avenue, and a four lane east-west, roadway serving the Milpitas BART station north of Capitol Avenue. South of Capitol Avenue, it currently terminates at Penitencia Creek. The proposed bridge project would extend this roadway over Penitencia Creek eventually linking to planned extensions to Sango Court and Tarob Court.

Tarob Court is a two-lane roadway extending west from Lundy Place. It provides access to the office/industrial buildings located to the west of Lundy Place and terminates in a cul-de-sac approximately 800 feet west of Lundy Place. Tarob Court provides direct access to the project site via a single driveway.

Lundy Place is a north-south, two-lane roadway extending from the Union Pacific Railroad tracks in the north to Trade Zone Boulevard in the south, where it becomes Lundy Avenue. Lundy Place terminates in a cul-de-sac approximately 650 feet north of Tarob Court.

Sango Court is a two-lane roadway extending east from Montague Expressway. It provides access to existing office/industrial buildings and terminates in a cul-de-sac approximately 500 feet east of Montague Expressway.

Existing bicycle access to the project vicinity is provided primarily via a network of nearby Class II bike lanes and Class III bike routes which are shared with vehicular traffic. Buffered Class II bike lanes are provided along Trade Zone Boulevard. Conventional Class II bike lanes are present on Lundy Avenue south of Trade Zone Boulevard, McCandless Drive, and Capitol Avenue. Existing Class III bike routes are present on Montague Expressway. A full description of existing bike lanes in the project area is provided in the City of Milpitas *Trail, Pedestrian, and Bicycle Master Plan.*

The signalized intersections serving the project vicinity generally provide crosswalks and the majority of streets in the project vicinity generally provide sidewalks, except at the following locations:

- Trade Zone Boulevard has intermittetend sidewalks
- West side of Lundy Avenue, just north of Trade Zone Bouelvard
- Both sides of Sango Court
- West side of Tarob Court

Figure 1
Site Location and Study Intersections

HEXAGON

NORTH
Not to Scale

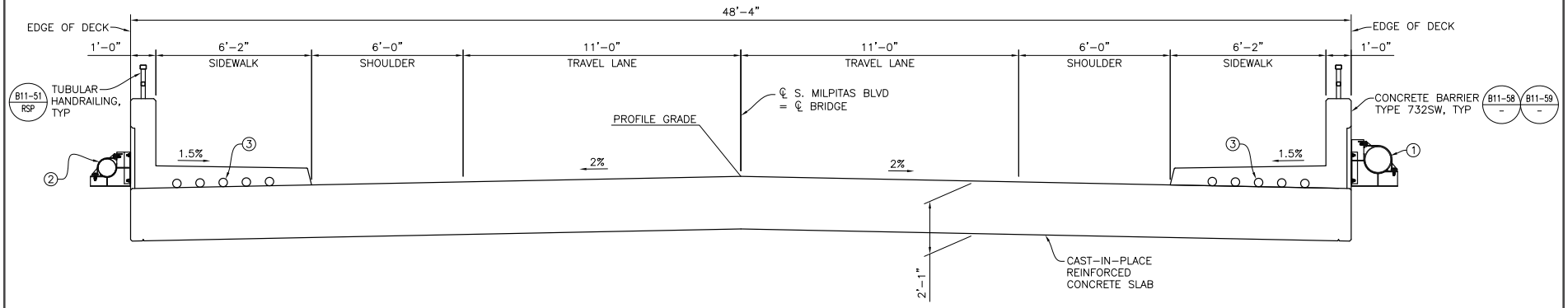

LEGEND:

1. 12" DIA. WATER, SEE CIVIL PLANS
2. 8" DIA. RECYCLED WATER, SEE CIVIL PLANS
3. 5–4" DIA. FUTURE UTILITY OPENING

ALL FUTURE UTILITY OPENINGS SHALL CONSIST OF SCH 40 PVC AND SHALL HAVE EXPANSION JOINTS AT BOTH ABUTMENT JOINTS,

SEE "UTILITY DUCT EXPANSION JOINT" ON B11–58 / –

ALL FUTURE UTILITY OPENINGS TO BE FURNISHED AND INSTALLED BY BRIDGE CONTRACTOR, UNLESS NOTED OTHERWISE.

Source: Cornerstone Structural Engineering Group, Inc., April 1, 2020.

Figure 2
Proposed Bridge Cross-Section

HEXAGON

NORTH
Not to Scale

Existing transit service in the project area includes VTA buses, Light Rail (LRT), and BART. These are primarily located at the Milpitas Transit center, which includes the Milpitas BART station, a park-and-ride lot, the Montague LRT station, and several bus routes at a bus transfer facility. This is located approximately 600 feet north of the proposed bridge. VTA light-rail runs in the median of Great Mall Parkway/Capitol Avenue, and BART provides regional access to San Jose, Fremont, Oakland, and San Francisco, with future service planned to Downtown San Jose and Santa Clara. Service schedules for transit service have been evolving due to the effects of COVID, but current route maps and service frequencies can be found at VTA.org and BART.gov.

VMT Analysis

Senate Bill (SB) 743 has changed the primary metric for identifying transportation impacts under CEQA from vehicle level of service (LOS) to daily vehicle-miles travelled (VMT). The City of Milpitas, as the lead agency for this CEQA document, has adopted guidelines to identify VMT impacts. These guidelines were largely based on the State of California Governor's Office of Planning and Research (OPR) guidelines published in its *Technical Advisory on Evaluating Transportation Impacts in CEQA*. The City and OPR guidelines allow for screening of projects that would not generate substantial VMT demand. City guidelines state that several types of roadway projects are exempt from quantitative VMT analysis, including projects that result in the:

> *Addition of roadway capacity on local or collector streets provided the project also substantially improves conditions for pedestrians, cyclists, and, if applicable, transit.*

The proposed project would primarily link land uses within the TASP area to the surrounding roadway network, resulting in the overall shortening of trips through the area. The bridge would be a two-lane facility with one lane in each direction and would serve as the extension Milpitas Boulevard. According to the TASP, the bridge segment, and the link between Tarob Court and Sango Court, would be considered local streets.

The proposed bridge would include 11-foot travel lanes, 6-foot shoulder areas for bikes, and 6-foot sidewalks for pedestrians on both sides of the street, improving access between the surrounding land uses and the Milpitas BART station (located less than 1,000 feet to the north). The connecting roadway (Tarob Court to Sango Court) would be constructed within a 52-foot right of way that includes 11-foot-wide travel lanes for both vehicles and bicycles in each direction, an 8-foot wide vehicle parking aisle on one side of the street, 7-foot-wide planting strip and 5-foot wide sidewalks on both sides of the street. Given the nature of the surrounding area and proximity to BART, as well as the project's bike/pedestrian friendly design, it meets the City's criteria to support the finding that the project's impacts would be *less than significant.*

To determine quantitatively whether the project would shorten vehicular trips, the Milpitas Travel Demand Forecast (TDF) Model was utilized to determine roadway VMT with and without the project, under existing plus approved and year 2040 conditions. The Milpitas TDF model is a refinement of the Valley Transportation Authority (VTA) countywide TDF model, which was developed during the City's General Plan update. It is an approved tool for estimating VMT within the City of Milpitas. Existing plus approved conditions represent existing traffic and land uses, plus approved development in the project vicinity. It is hereafter referred to as near-term conditions. The results are presented in Table 1, which show the change in daily VMT and VHT (vehicle-hours-traveled) within the Milpitas TASP area.

Table 1
VMT within the Project Vicinity

Scenario	Daily Vehicle Miles Traveled			Daily Vehicle Hours Traveled		
	No Bridge	w/ Bridge	Difference	No Bridge	w/ Bridge	Difference
Near- Term	83,658	83,373	-285	2,087	2,078	-9.8
2040	83,042	82,697	-345	2,272	2,261	-11.0

The near-term and year 2040 forecasts support the premise that the bridge would serve primarily local traffic and reduce VMT. The data show that the proposed bridge would reduce the daily VMT in the area by 285 in the near term and by 345 by year 2040. Similarly, daily vehicle-hours of travel would also decrease, by 9.8 hours and 11.0 hours in the near-term and year 2040, respectively. Note that the 2040 VMT is slightly less in year 2040 compared to the near-term, even though there is more development assumed in the TSAP area in year 2040. The reduction in VMT is caused by: (1) higher development densities in the TSAP area which increases non-motorized travel and transit use; (2) increased congestion of the roadway system making transit more attractive; and (3) Phase II BART extension to San Jose and Santa Clara, which includes four new BART stations and BART trains running on more frequent headways.

Impacts to Bikes, Pedestrians and Transit

Nearly all of the streets within the study area include sidewalks, curb ramps, and crosswalks at major intersections. In addition, there are existing bike lanes in the area on Capitol Avenue, Lundy Avenue, Trade Zone Boulevard, and Milpitas Boulevard. According to the Valley Transportation Authority (VTA) Transportation Impact Analysis (TIA) Technical Guidelines, a project would create an impact on pedestrian and bike circulation if: (1) it would reduce, sever or eliminate existing or planned bike/pedestrian access and circulation in the area; (2) it would preclude, modify, or otherwise affect proposed bicycle and pedestrian projects and/or policies identified in an adopted plan; or (3) it would cause a change to existing bike paths such as alignment, width of the trail ROW, or length of the trail.

The City of Milpitas *Trail, Pedestrian, and Bicycle Master Plan* was reviewed to insure project conformance. The plan does not show any planned improvements within the TASP area bounded by Capitol Avenue, Trade Zone Boulevard, and Montague Expressway. This is likely because bike and pedestrian improvements are already specified in the TASP, which includes various policies:

- *Policy 3.15: Review individual development applications to ensure that adequate street right-of-way, bicycle facilities, pedestrian facilities and landscaping are provided and are consistent with the Transit Area Plan circulation policies and street design standards.*
- *Policy 3.27: Every resident of the Transit Area shall be able to safely walk and bike to the BART and VTA light rail stations. As projects are constructed, make sure that all the routes described below are continuous and designed to be attractive and safe for pedestrians.*
- *Policy 3.28: Provide continuous bicycle circulation through the project site and to adjacent areas by closing existing gaps in bicycle lanes and bicycle routes.*

- *Policy 3.29: A Class III bicycle route shall be created on the internal roadways (from the Milpitas Boulevard Extension/Capitol Avenue intersection to Tarob Court) to provide a continuous bicycle connection between Milpitas Boulevard and the existing bicycle lanes on Lundy Street.*
- *Policy 3.30: Maintain pedestrian and biking facilities.*

Figure 3-5 in the TASP shows a proposed bike/pedestrian trail running along Penitencia Creek and Milpitas Boulevard (south of Capitol Avenue). The proposed Penitencia Creek bridge is shown in the TASP as a Class III Bike route and is classified on Figure 5-1 as "Typical Residential Street." While the TASP does not provide specific details for bridge design, Figure 5-9 in the TASP shows recommended design guidelines for "New Local Streets," which includes 11-foot travel lanes and 5-foot wide sidewalks on both sides of the street.

The proposed bridge would include 6-foot shoulder areas for bikes and 6-foot sidewalks for pedestrians on both sides of the street, which exceeds the standards outlined in the TASP. The connecting segment between Tarob Court and Sango Court would meet the TASP guidelines. Overall, the proposed project would improve access for bikes and pedestrians between the surrounding land uses and the Milpitas BART station, Montague Light Rail station, and BART bus transfer facility. Without the proposed bridge, walking distances for land uses south of Penitencia Creek to the Milpitas Transit Center area would be increased considerably. The project design would not modify any existing pedestrian or bikeway facilities, nor would it preclude other planned improvements in the area. It is also consistent with the design guidelines identified in the TASP. Thus, the project would result in a *less than significant* impact to bikes and pedestrians.

There are several transit services available in the project vicinity. These are primarily located at the Milpitas Transit center, which includes the Milpitas BART station, a park-and-ride lot, the Montague Light Rail station, and several bus routes at a bus transfer facility. According to the VTA TIA Technical Guidelines, a project would create an impact on transit if: (1) it would cause a permanent or temporary reduction of transit availability or interference with existing transit users (relocation/closure of a transit stop or vacation of a roadway utilized by transit) or (2) result in significant delays in transit service.

The project, by itself, would not preclude, modify or otherwise affect existing or proposed transit projects or policies identified by the VTA. As a roadway improvement linking various surrounding uses, the bridge project would not increase transit delay, but could reduce bus delays on surrounding streets by shortening the length of roadway trips in the project vicinity (see VMT discussion). Overall, the bridge project would increase transit accessibility by providing a more convenient bike and pedestrian link to the surrounding transit uses. Thus, the proposed bridge project would result in a *less than significant* impact to transit service.

Level of Service Analysis

A level of service analysis was conducted in the project vicinity to determine the effects of the proposed project on intersection delays. This analysis was requested by City staff and is provided for informational purposes, as in accordance with state guidelines, the metric used determine environmental impacts is VMT. The analysis evaluated level of service at the following major intersections nearby, with and without the proposed vehicular bridge over Penitencia Creek:

1. East Capitol Avenue and Milpitas Boulevard
2. Trade Zone Boulevard and Lundy Avenue
3. Montague Expressway and Trade Zone Boulevard
4. Montague Expressway and Great Mall Parkway

5. Montague Expressway and Sango Court

These locations were evaluated under near-term (existing plus approved) and year 2040 conditions during the AM (7-9) and PM (4-6) peak periods. The baseline roadway network in the project area also reflects a future two lane roadway connection between Sango Court and Expedition Lane (see Figure 3). Traffic volumes were estimated from the aforementioned Milpitas TDF model, which reflects traffic generation volumes pre-Covid (see Figures 4 through 8). The land uses within the model within the project vicinity were updated based on current development plans supplied by City of Milpitas staff. The results of the analysis are shown in Table 2.

The results show that, generally, the project would increase the amount of traffic and delays at the intersection of Capitol Avenue and Milpitas Boulevard, as residents west of the proposed bridge access Capitol Avenue. In addition, the proposed bridge would generally decrease or maintain the delays along Montague Expressway, with the largest delay decreases occurring at the intersection of Montague Expressway and Trade Zone Boulevard.

TASP Site Circulation

At the request of City staff, a site circulation analysis was conducted to evaluate the connectivity within the TASP in the vicinity of the proposed bridge. As previously described, the baseline roadway network reflects a future two lane roadway connection between Sango Court and Expedition Lane (see also Figure 1). Another planned connection would link Tarob Court to Journey Street via the extension of Expedition Lane. This link could provide vehicular connectivity, or could be designated as bike and pedestrian only, depending on the design and layout of future project-specific development plans. A vehicular link would be ideal, as it would provide many residences west of Journey Street with convenient access to the existing traffic signal at Lundy Avenue/Trade Zone Boulevard. The alternative would be to make left turns from Momentum Drive and Journey Street to Trade Zone Boulevard, which can be difficult during peak hours due to roadway congestion on Trade Zone Boulevard. Both of these roadway links would be undertaken as the surrounding properties are redeveloped and would include pedestrian and bike elements consistent with TASP design guidelines.

The proposed vehicular bridge link would have several potential benefits. First, it would provide access for the properties south of Penitencia Creek to Milpitas Boulevard, Capitol Avenue, and the Milpitas Transit Center, via the signalized intersection at Capitol Avenue/Milpitas Boulevard. Second, it would allow properties north of Penitencia Creek direct access to the signalized intersection at Lundy Avenue and Trade Zone Avenue as a means to reach the industrial areas south of Trade Zone Boulevard. Without the proposed project, more traffic would be routed through the intersections of Montague Expressway/Capitol Avenue and Trade Zone Boulevard/Montague Expressway, which are congested facilities during peak commute periods (see also Level of Service Analysis section above). There would be considerable vehicular demand for the proposed bridge. Traffic volumes on the bridge were forecasted to be 700 daily trips (52 AM peak hour trips and 79 PM peak hour trips) under near term conditions and 800 daily vehicle trips (98 AM peak hour trips and 121 PM peak hour trips) by year 2040. The bridge would also reduce the daily vehicle-hours of travel within the neighborhood by 11 hours by year 2040.

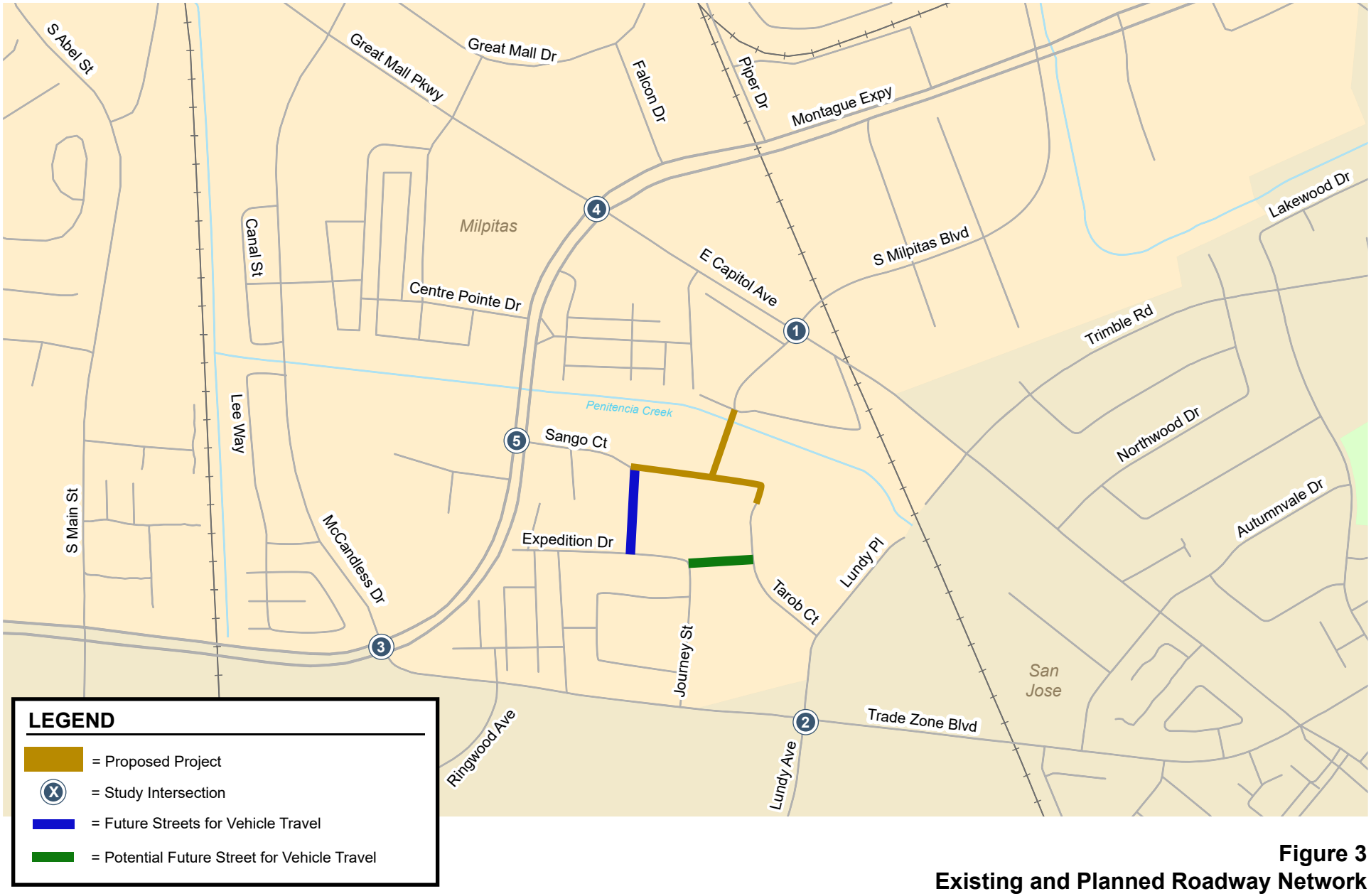

Figure 3
Existing and Planned Roadway Network

HEXAGON

NORTH
Not to Scale

Figure 4
Existing Traffic Volumes

HEXAGON

Figure 5
Near Term No Project Traffic Volumes

HEXAGON

Figure 6
Near Term Plus Project Traffic Volumes

HEXAGON

Figure 7
Year 2040 No Project Traffic Volumes

HEXAGON

Figure 8
Year 2040 Plus Project Traffic Volumes

HEXAGON

Table 2
Intersection Level of Service Summary

								Near Term					Year 2040				
						Existing		No Project		With Project			No Project		With Project		
No.	Signalized Intersection	Traffic Control	Count Date	Peak Hour	LOS Std.	Avg. Delay[1]	LOS	Avg. Delay[1]	LOS	Avg. Delay[1]	LOS	Change in Avg. Delay	Avg. Delay[1]	LOS	Avg. Delay[1]	LOS	Change in Avg. Delay
1	Capitol Avenue and Milpitas Boulevard	Signal	06/23/21	AM	D	19.7	B	26.5	C	26.8	C	0.3	114.3	F	114.3	F	0.0
			06/23/21	PM		15.5	B	18.7	B	20.6	C	1.9	135.7	F	139.1	F	3.4
2	Lundy Avenue and Trade Zone Boulevard	Signal	05/02/19	AM	D	30.3	C	31.9	C	31.9	C	0.0	87.1	F	87.9	F	0.8
			05/02/19	PM		41.8	D	49.7	D	49.8	D	0.1	77.8	E	77.7	E	-0.1
3	Montague Expressway and Trade Zone Boulevard	Signal	09/17/19	AM	E	97.5	F	135.3	F	134.3	F	-1.0	230.9	F	225.9	F	-5.0
			11/08/18	PM		65.9	E	83.4	F	79.9	E	-3.5	90.5	F	89.4	F	-1.1
4	Montague Expressway and Capitol Avenue	Signal	05/23/21	AM	E	42.4	D	45.1	D	45.1	D	0.0	56.8	E	56.7	E	-0.1
			11/08/18	PM		69.6	E	72.7	E	73.8	E	1.1	187.3	F	187.3	F	0.0
5	Montague Expressway and Sango Court	SSSC[2]	06/29/21	AM	N/A	0.2/9.9	A/A	0.9/10.7	A/B	0.9/10.7	A/B	0.0/0.0	0.8/14.8	A/B	0.9/14.9	A/B	0.1/0.1
			06/29/21	PM		0.2/14.5	A/B	0.5/17.3	A/C	0.5/17.1	A/B	0.0/-0.2	0.9/36.5	A/E	0.8/34.9	A/D	-0.1/1.6

[1] Signalized intersection level of service is based on the Highway Capacity Manual (HCM) methodology, using average control delay for the entire intersection. For unsignalized intersection at Montague/Sango, average intersection delay/approach with highest delay based on HCM methodology are shown.

[2] SSSC = Side street stop control

Similarly, the proposed bridge project would have a beneficial impact on pedestrian and bike circulation. In addition to providing connectivity for inter-neighborhood trips and recreation, walking distances for land uses south of Penitencia Creek to the Milpitas BART station area, without the proposed bridge, would be increased by as much as 2,000 feet, which at typical walking speeds, equates to over 8 minutes of additional travel time. Reducing pedestrian and bike travel times increases the convenience of transit trips, encouraging transit ridership, and reducing the possibility that residents would drive to the BART park-and-ride.

Project Alternative

An alternative to the proposed project is to construct the bridge portion for bikes and pedestrians only (i.e. no vehicular traffic). This configuration would retain all of the bike and pedestrian benefits, including improving access to the Milpitas BART station area and providing connectivity for inter-neighborhood trips and recreation. There would be no change in VMT or LOS from existing or baseline conditions, and the project would still qualify for a CEQA exclusion as it would "substantially improve conditions" for pedestrians and cyclists. Thus, this configuration would also result in a *less than significant* impact.

Conclusions

The impacts of the proposed project were evaluated in accordance with City of Milpitas and State of California OPR CEQA guidelines. The project's site circulation and level of service effects were also evaluated. This report reached the following conclusions:

- The proposed vehicular bridge project would result in a *less than significant impact* to VMT and would reduce both VMT and VHT in the project vicinity.
- The proposed bridge would result in *less than significant* impacts to bikes, pedestrians, and transit, and would be generally benefit bike and pedestrian circulation.
- The proposed vehicular bridge would generally reduce vehicular delays on Montague Expressway, and increase delays at the intersection of Capitol Avenue and Milpitas Boulevard.
- The proposed vehicular bridge would provide improved transportation connectivity between all the uses in the area and would comply with the design guidelines specified in the City's TASP.
- A project alternative, which includes constructing the bridge portion for bike and pedestrian use only, would also result in a *less than significant* CEQA impact.

Appendix

ALL TRAFFIC DATA SERVICES
(303) 216-2439
www.alltrafficdata.net

Location: 1 N CAPITOL AVE & S MILPITAS BLVD AM
Date: Wednesday, June 23, 2021
Peak Hour: 08:00 AM - 09:00 AM
Peak 15-Minutes: 08:45 AM - 09:00 AM

Peak Hour - Motorized Vehicles

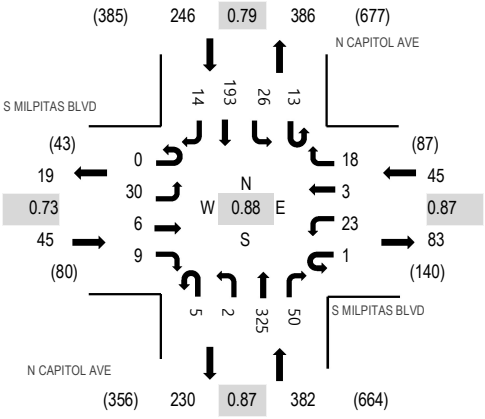

Peak Hour - Bicycles

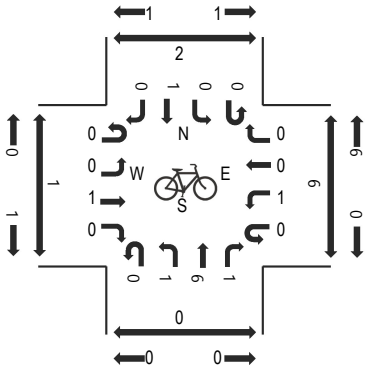

Peak Hour - Pedestrians

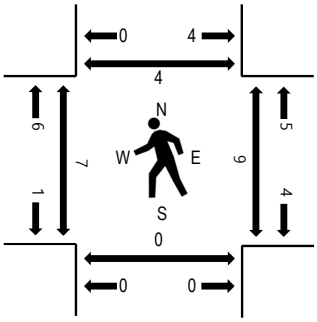

Note: Total study counts contained in parentheses.

Traffic Counts - Motorized Vehicles

Interval Start Time	S MILPITAS BLVD Eastbound				S MILPITAS BLVD Westbound				N CAPITOL AVE Northbound				N CAPITOL AVE Southbound				Total	Rolling Hour	Pedestrian Crossings			
	U-Turn	Left	Thru	Right	U-Turn	Left	Thru	Right	U-Turn	Left	Thru	Right	U-Turn	Left	Thru	Right			West	East	South	North
7:00 AM	0	7	0	1	0	3	0	9	0	5	35	13	1	3	29	5	111	498	1	1	0	0
7:15 AM	0	4	0	1	0	3	1	5	1	0	57	6	1	5	26	4	114	542	0	5	1	1
7:30 AM	0	9	3	4	0	1	0	8	3	0	52	10	0	5	26	4	125	585	1	1	0	0
7:45 AM	0	4	1	1	0	4	0	8	1	3	86	10	5	1	22	2	148	661	1	3	0	0
8:00 AM	0	5	1	4	0	5	1	6	2	0	66	13	3	4	40	5	155	718	3	5	0	1
8:15 AM	0	11	3	1	1	3	0	4	2	1	72	14	5	9	29	2	157		4	2	0	2
8:30 AM	0	5	2	0	0	8	1	4	0	0	96	14	2	4	63	2	201		0	1	0	1
8:45 AM	0	9	0	4	0	7	1	4	1	1	91	9	3	9	61	5	205		0	1	0	0

Peak Rolling Hour Flow Rates

Vehicle Type	Eastbound				Westbound				Northbound				Southbound				Total
	U-Turn	Left	Thru	Right	U-Turn	Left	Thru	Right	U-Turn	Left	Thru	Right	U-Turn	Left	Thru	Right	
Articulated Trucks	0	0	0	0	0	0	0	1	0	0	2	0	0	0	1	0	4
Lights	0	28	6	9	1	22	3	15	5	2	319	48	13	24	189	12	696
Mediums	0	2	0	0	0	1	0	2	0	0	4	2	0	2	3	2	18
Total	0	30	6	9	1	23	3	18	5	2	325	50	13	26	193	14	718

ALL TRAFFIC DATA SERVICES
(303) 216-2439
www.alltrafficdata.net

Location: 1 N CAPITOL AVE & S MILPITAS BLVD PM
Date: Wednesday, June 23, 2021
Peak Hour: 05:00 PM - 06:00 PM
Peak 15-Minutes: 05:30 PM - 05:45 PM

Peak Hour - Motorized Vehicles

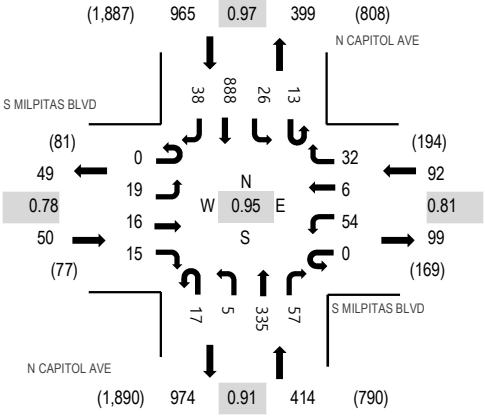

Peak Hour - Bicycles

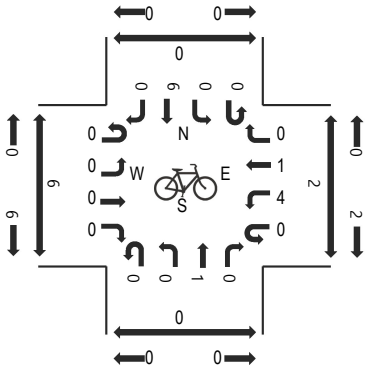

Peak Hour - Pedestrians

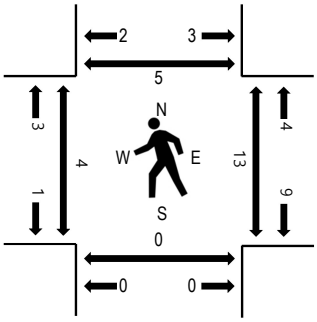

Note: Total study counts contained in parentheses.

Traffic Counts - Motorized Vehicles

Interval Start Time	S MILPITAS BLVD Eastbound				S MILPITAS BLVD Westbound				N CAPITOL AVE Northbound				N CAPITOL AVE Southbound				Total	Rolling Hour	Pedestrian Crossings			
	U-Turn	Left	Thru	Right	U-Turn	Left	Thru	Right	U-Turn	Left	Thru	Right	U-Turn	Left	Thru	Right			West	East	South	North
4:00 PM	0	2	0	4	0	8	0	12	6	0	92	9	7	10	238	3	391	1,427	1	1	0	1
4:15 PM	0	4	2	2	0	14	0	8	4	1	80	13	14	7	196	9	354	1,422	0	3	0	0
4:30 PM	0	2	3	2	0	16	0	16	2	1	71	9	4	5	189	4	324	1,428	2	2	0	2
4:45 PM	0	3	1	2	0	14	1	13	1	3	77	7	4	4	218	10	358	1,503	1	1	0	2
5:00 PM	0	5	3	4	0	12	0	7	4	3	80	19	5	7	228	9	386	1,521	0	3	0	0
5:15 PM	0	3	3	2	0	16	2	7	1	1	83	11	2	8	213	8	360		0	2	0	2
5:30 PM	0	6	5	5	0	15	0	8	6	1	92	15	3	8	227	8	399		1	4	0	3
5:45 PM	0	5	5	4	0	11	4	10	6	0	80	12	3	3	220	13	376		3	4	0	0

Peak Rolling Hour Flow Rates

Vehicle Type	Eastbound				Westbound				Northbound				Southbound				Total
	U-Turn	Left	Thru	Right	U-Turn	Left	Thru	Right	U-Turn	Left	Thru	Right	U-Turn	Left	Thru	Right	
Articulated Trucks	0	0	0	0	0	0	0	0	0	0	2	0	0	0	1	0	3
Lights	0	19	16	15	0	54	6	32	17	5	332	57	13	26	882	38	1,512
Mediums	0	0	0	0	0	0	0	0	0	0	1	0	0	0	5	0	6
Total	0	19	16	15	0	54	6	32	17	5	335	57	13	26	888	38	1,521

Lundy Ave
Trade Zone Blvd

Date: 05-02-2019
Count Period: 7:00 AM to 9:00 AM
Peak Hour: 8:00 AM to 9:00 AM

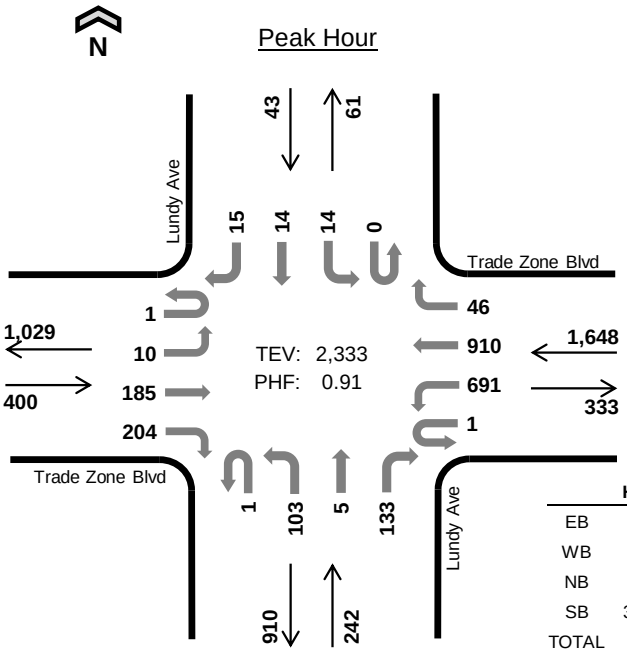

	HV %:	PHF
EB	4.0%	0.85
WB	1.5%	0.95
NB	5.0%	0.81
SB	34.9%	0.63
TOTAL	2.9%	0.91

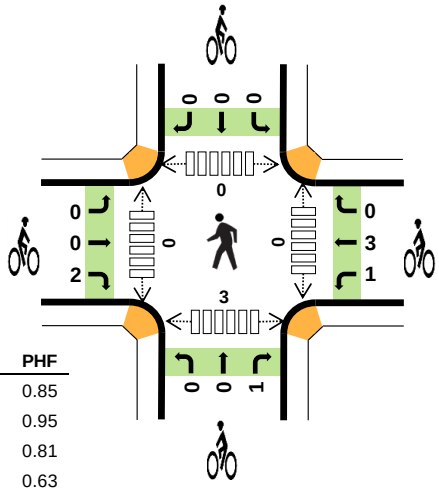

Two-Hour Count Summaries

Interval Start		Trade Zone Blvd Eastbound UT	LT	TH	RT	Trade Zone Blvd Westbound UT	LT	TH	RT	Lundy Ave Northbound UT	LT	TH	RT	Lundy Ave Southbound UT	LT	TH	RT	15-min Total	Rolling One Hour
7:00 AM		1	2	43	27	0	46	207	9	0	27	3	29	0	1	1	3	399	0
7:15 AM		0	7	36	40	0	76	216	13	0	15	1	25	0	0	0	3	432	0
7:30 AM		0	5	46	39	0	102	207	7	0	36	0	34	0	0	0	3	479	0
7:45 AM		0	1	43	54	0	135	214	14	0	22	2	33	0	4	0	2	524	1,834
8:00 AM		**0**	**3**	**40**	**44**	**0**	**140**	**225**	**13**	**0**	**27**	**2**	**42**	**0**	**2**	**2**	**3**	**543**	1,978
8:15 AM		**0**	**2**	**41**	**45**	**1**	**176**	**249**	**9**	**1**	**21**	**0**	**25**	**0**	**3**	**3**	**3**	**579**	2,125
8:30 AM		**0**	**2**	**48**	**57**	**0**	**184**	**217**	**6**	**0**	**21**	**2**	**26**	**0**	**3**	**2**	**5**	**573**	2,219
8:45 AM		**1**	**3**	**56**	**58**	**0**	**191**	**219**	**18**	**0**	**34**	**1**	**40**	**0**	**6**	**7**	**4**	**638**	**2,333**
Count Total		2	25	353	364	1	1,050	1,754	89	1	203	11	254	0	19	15	26	4,167	0
Peak Hour	**All**	**1**	**10**	**185**	**204**	**1**	**691**	**910**	**46**	**1**	**103**	**5**	**133**	**0**	**14**	**14**	**15**	**2,333**	**0**
	HV	**0**	**2**	**2**	**12**	**0**	**4**	**10**	**11**	**0**	**8**	**1**	**3**	**0**	**7**	**1**	**7**	**68**	**0**
	HV%	**0%**	**20%**	**1%**	**6%**	**0%**	**1%**	**1%**	**24%**	**0%**	**8%**	**20%**	**2%**	**-**	**50%**	**7%**	**47%**	**3%**	**0**

Note: Two-hour count summary volumes include heavy vehicles but exclude bicycles in overall count.

Interval Start	Heavy Vehicle Totals EB	WB	NB	SB	Total	Bicycles EB	WB	NB	SB	Total	Pedestrians (Crossing Leg) East	West	North	South	Total
7:00 AM	4	2	3	1	*10*	0	0	0	0	*0*	0	0	0	0	*0*
7:15 AM	3	2	3	1	*9*	0	0	0	0	*0*	1	0	0	2	*3*
7:30 AM	4	5	5	1	*15*	1	0	0	0	*1*	0	1	1	0	*2*
7:45 AM	4	8	3	2	*17*	0	0	0	0	*0*	0	0	0	0	*0*
8:00 AM	**4**	**7**	**1**	**2**	***14***	**0**	**1**	**0**	**0**	***1***	**0**	**0**	**0**	**0**	*0*
8:15 AM	**3**	**4**	**3**	**3**	***13***	**0**	**2**	**0**	**0**	***2***	**0**	**0**	**0**	**1**	*1*
8:30 AM	**5**	**6**	**3**	**5**	***19***	**0**	**0**	**0**	**0**	***0***	**0**	**0**	**0**	**2**	*2*
8:45 AM	**4**	**8**	**5**	**5**	***22***	**2**	**1**	**1**	**0**	***4***	**0**	**0**	**0**	**0**	***0***
Count Total	31	42	26	20	*119*	3	4	1	0	*8*	1	1	1	5	*8*
Peak Hour	**16**	**25**	**12**	**15**	***68***	**2**	**4**	**1**	**0**	***7***	**0**	**0**	**0**	**3**	***3***

Two-Hour Count Summaries - Heavy Vehicles

Interval Start	Trade Zone Blvd				Trade Zone Blvd				Lundy Ave				Lundy Ave				15-min Total	Rolling One Hour
	Eastbound				Westbound				Northbound				Southbound					
	UT	LT	TH	RT	UT	LT	TH	RT	UT	LT	TH	RT	UT	LT	TH	RT		
7:00 AM	0	1	2	1	0	0	2	0	0	1	0	2	0	0	0	1	10	0
7:15 AM	0	2	0	1	0	0	1	1	0	1	0	2	0	0	0	1	9	0
7:30 AM	0	0	1	3	0	1	3	1	0	5	0	0	0	0	0	1	15	0
7:45 AM	0	0	3	1	0	1	3	4	0	1	0	2	0	2	0	0	17	51
8:00 AM	**0**	**0**	**1**	**3**	**0**	**2**	**1**	**4**	**0**	**1**	**0**	**0**	**0**	**2**	**0**	**0**	**14**	55
8:15 AM	**0**	**1**	**1**	**1**	**0**	**0**	**3**	**1**	**0**	**2**	**0**	**1**	**0**	**1**	**1**	**1**	**13**	59
8:30 AM	**0**	**1**	**0**	**4**	**0**	**1**	**3**	**2**	**0**	**1**	**1**	**1**	**0**	**2**	**0**	**3**	**19**	63
8:45 AM	**0**	**0**	**0**	**4**	**0**	**1**	**3**	**4**	**0**	**4**	**0**	**1**	**0**	**2**	**0**	**3**	**22**	**68**
Count Total	0	5	8	18	0	6	19	17	0	16	1	9	0	9	1	10	119	0
Peak Hour	**0**	**2**	**2**	**12**	**0**	**4**	**10**	**11**	**0**	**8**	**1**	**3**	**0**	**7**	**1**	**7**	**68**	**0**

Two-Hour Count Summaries - Bikes

Interval Start	Trade Zone Blvd			Trade Zone Blvd			Lundy Ave			Lundy Ave			15-min Total	Rolling One Hour
	Eastbound			Westbound			Northbound			Southbound				
	LT	TH	RT	LT	TH	RT	LT	TH	RT	LT	TH	RT		
7:00 AM	0	0	0	0	0	0	0	0	0	0	0	0	0	0
7:15 AM	0	0	0	0	0	0	0	0	0	0	0	0	0	0
7:30 AM	0	0	1	0	0	0	0	0	0	0	0	0	1	0
7:45 AM	0	0	0	0	0	0	0	0	0	0	0	0	0	1
8:00 AM	**0**	**0**	**0**	**0**	**1**	**0**	**0**	**0**	**0**	**0**	**0**	**0**	**1**	2
8:15 AM	**0**	**0**	**0**	**0**	**2**	**0**	**0**	**0**	**0**	**0**	**0**	**0**	**2**	4
8:30 AM	**0**	**0**	**0**	**0**	**0**	**0**	**0**	**0**	**0**	**0**	**0**	**0**	**0**	3
8:45 AM	**0**	**0**	**2**	**1**	**0**	**0**	**0**	**0**	**1**	**0**	**0**	**0**	**4**	**7**
Count Total	0	0	3	1	3	0	0	0	1	0	0	0	8	0
Peak Hour	**0**	**0**	**2**	**1**	**3**	**0**	**0**	**0**	**1**	**0**	**0**	**0**	**7**	**0**

Note: U-Turn volumes for bikes are included in Left-Turn, if any.

Lundy Ave
Trade Zone Blvd

Date: 05-02-2019
Count Period: 4:00 PM to 6:00 PM
Peak Hour: 5:00 PM to 6:00 PM

N

Peak Hour

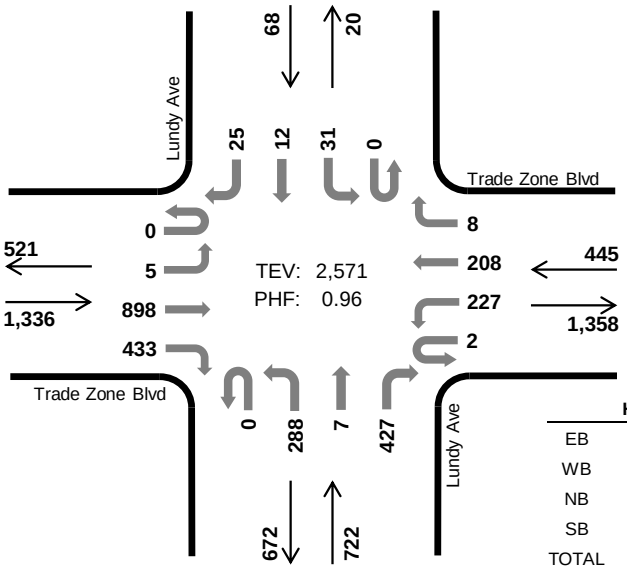

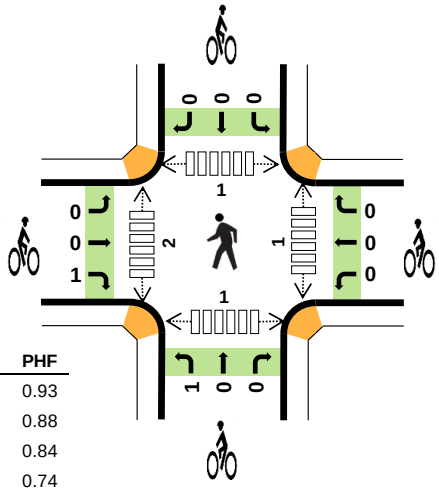

	HV %:	PHF
EB	1.2%	0.93
WB	0.9%	0.88
NB	1.2%	0.84
SB	2.9%	0.74
TOTAL	1.2%	0.96

Two-Hour Count Summaries

Interval Start	Trade Zone Blvd Eastbound				Trade Zone Blvd Westbound				Lundy Ave Northbound				Lundy Ave Southbound				15-min Total	Rolling One Hour
	UT	LT	TH	RT	UT	LT	TH	RT	UT	LT	TH	RT	UT	LT	TH	RT		
4:00 PM	0	4	176	93	0	47	36	3	0	51	1	89	0	6	5	8	519	0
4:15 PM	0	4	214	100	0	49	42	2	0	63	3	91	0	4	4	8	584	0
4:30 PM	1	2	248	102	0	60	47	2	0	65	0	102	0	7	1	2	639	0
4:45 PM	1	4	230	106	0	41	58	1	1	64	0	102	0	6	1	4	619	2,361
5:00 PM	**0**	**1**	**186**	**105**	**0**	**54**	**47**	**3**	**0**	**97**	**2**	**117**	**0**	**15**	**3**	**4**	**634**	2,476
5:15 PM	**0**	**2**	**241**	**116**	**1**	**45**	**46**	**1**	**0**	**51**	**0**	**95**	**0**	**10**	**5**	**8**	**621**	2,513
5:30 PM	**0**	**0**	**226**	**118**	**0**	**63**	**62**	**1**	**0**	**80**	**2**	**104**	**0**	**4**	**2**	**7**	**669**	2,543
5:45 PM	**0**	**2**	**245**	**94**	**1**	**65**	**53**	**3**	**0**	**60**	**3**	**111**	**0**	**2**	**2**	**6**	**647**	**2,571**
Count Total	2	19	1,766	834	2	424	391	16	1	531	11	811	0	54	23	47	4,932	0
Peak Hour All	**0**	**5**	**898**	**433**	**2**	**227**	**208**	**8**	**0**	**288**	**7**	**427**	**0**	**31**	**12**	**25**	**2,571**	**0**
Peak Hour HV	**0**	**1**	**4**	**11**	**0**	**2**	**2**	**0**	**0**	**8**	**0**	**1**	**0**	**0**	**0**	**2**	**31**	**0**
Peak Hour HV%	**-**	**20%**	**0%**	**3%**	**0%**	**1%**	**1%**	**0%**	**-**	**3%**	**0%**	**0%**	**-**	**0%**	**0%**	**8%**	**1%**	**0**

Note: Two-hour count summary volumes include heavy vehicles but exclude bicycles in overall count.

Interval Start	Heavy Vehicle Totals					Bicycles					Pedestrians (Crossing Leg)				
	EB	WB	NB	SB	Total	EB	WB	NB	SB	Total	East	West	North	South	Total
4:00 PM	4	1	7	1	*13*	0	0	0	0	*0*	0	0	0	0	*0*
4:15 PM	5	2	3	2	*12*	0	0	0	0	*0*	0	0	0	0	*0*
4:30 PM	7	4	2	0	*13*	0	0	0	0	*0*	0	0	0	0	*0*
4:45 PM	2	3	4	1	*10*	0	0	0	0	*0*	0	0	0	0	*0*
5:00 PM	**6**	**2**	**2**	**0**	***10***	**0**	**0**	**0**	**0**	***0***	**0**	**0**	**0**	**0**	*0*
5:15 PM	**5**	**2**	**3**	**0**	***10***	**1**	**0**	**0**	**0**	***1***	**1**	**1**	**0**	**0**	*2*
5:30 PM	**0**	**0**	**1**	**1**	***2***	**0**	**0**	**1**	**0**	***1***	**0**	**1**	**0**	**1**	*2*
5:45 PM	**5**	**0**	**3**	**1**	***9***	**0**	**0**	**0**	**0**	***0***	**0**	**0**	**1**	**0**	***1***
Count Total	34	14	25	6	*79*	1	0	1	0	*2*	1	2	1	1	*5*
Peak Hour	**16**	**4**	**9**	**2**	***31***	**1**	**0**	**1**	**0**	***2***	**1**	**2**	**1**	**1**	***5***

Two-Hour Count Summaries - Heavy Vehicles

Interval Start	Trade Zone Blvd				Trade Zone Blvd				Lundy Ave				Lundy Ave				15-min Total	Rolling One Hour
	Eastbound				Westbound				Northbound				Southbound					
	UT	LT	TH	RT	UT	LT	TH	RT	UT	LT	TH	RT	UT	LT	TH	RT		
4:00 PM	0	0	0	4	0	0	0	1	0	6	0	1	0	0	0	1	13	0
4:15 PM	0	0	2	3	0	0	2	0	0	2	0	1	0	0	0	2	12	0
4:30 PM	0	1	2	4	0	3	0	1	0	1	0	1	0	0	0	0	13	0
4:45 PM	0	0	0	2	0	0	3	0	0	4	0	0	0	0	0	1	10	48
5:00 PM	**0**	**0**	**2**	**4**	**0**	**1**	**1**	**0**	**0**	**2**	**0**	**0**	**0**	**0**	**0**	**0**	**10**	45
5:15 PM	**0**	**0**	**1**	**4**	**0**	**1**	**1**	**0**	**0**	**2**	**0**	**1**	**0**	**0**	**0**	**0**	**10**	43
5:30 PM	**0**	**0**	**0**	**0**	**0**	**0**	**0**	**0**	**0**	**1**	**0**	**0**	**0**	**0**	**0**	**1**	**2**	32
5:45 PM	**0**	**1**	**1**	**3**	**0**	**0**	**0**	**0**	**0**	**3**	**0**	**0**	**0**	**0**	**0**	**1**	**9**	**31**
Count Total	0	2	8	24	0	5	7	2	0	21	0	4	0	0	0	6	79	0
Peak Hour	**0**	**1**	**4**	**11**	**0**	**2**	**2**	**0**	**0**	**8**	**0**	**1**	**0**	**0**	**0**	**2**	**31**	**0**

Two-Hour Count Summaries - Bikes

Interval Start	Trade Zone Blvd			Trade Zone Blvd			Lundy Ave			Lundy Ave			15-min Total	Rolling One Hour
	Eastbound			Westbound			Northbound			Southbound				
	LT	TH	RT	LT	TH	RT	LT	TH	RT	LT	TH	RT		
4:00 PM	0	0	0	0	0	0	0	0	0	0	0	0	0	0
4:15 PM	0	0	0	0	0	0	0	0	0	0	0	0	0	0
4:30 PM	0	0	0	0	0	0	0	0	0	0	0	0	0	0
4:45 PM	0	0	0	0	0	0	0	0	0	0	0	0	0	0
5:00 PM	**0**	**0**	**0**	**0**	**0**	**0**	**0**	**0**	**0**	**0**	**0**	**0**	**0**	0
5:15 PM	**0**	**0**	**1**	**0**	**0**	**0**	**0**	**0**	**0**	**0**	**0**	**0**	**1**	1
5:30 PM	**0**	**0**	**0**	**0**	**0**	**0**	**1**	**0**	**0**	**0**	**0**	**0**	**1**	2
5:45 PM	**0**	**0**	**0**	**0**	**0**	**0**	**0**	**0**	**0**	**0**	**0**	**0**	**0**	**2**
Count Total	0	0	1	0	0	0	1	0	0	0	0	0	2	0
Peak Hour	**0**	**0**	**1**	**0**	**0**	**0**	**1**	**0**	**0**	**0**	**0**	**0**	**2**	**0**

Note: U-Turn volumes for bikes are included in Left-Turn, if any.

All Traffic Data Services Inc.

(303) 216-2439
www.alltrafficdata.net

Location: 1 TRADE ZONE BLVD & MONTAGUE EXPY AM
Date: Tuesday, September 17, 2019
Peak Hour: 07:30 AM - 08:30 AM
Peak 15-Minutes: 08:15 AM - 08:30 AM

Peak Hour - Motorized Vehicles

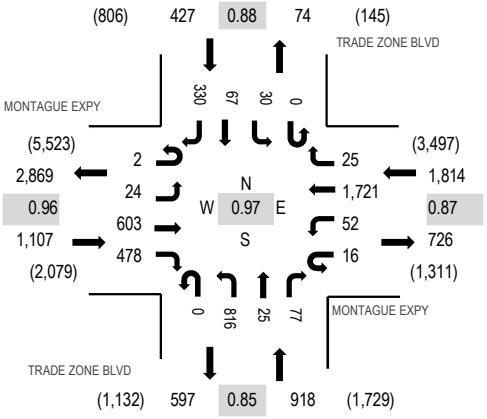

Peak Hour - Bicycles

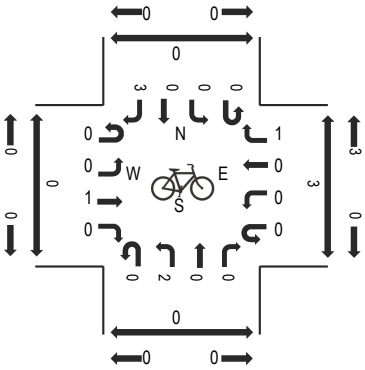

Peak Hour - Pedestrians

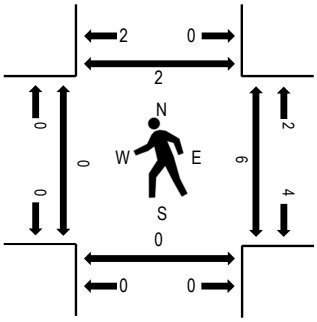

Note: Total study counts contained in parentheses.

Traffic Counts - Motorized Vehicles

Interval Start Time	MONTAGUE EXPY Eastbound				MONTAGUE EXPY Westbound				TRADE ZONE BLVD Northbound				TRADE ZONE BLVD Southbound				Total	Rolling Hour	Pedestrian Crossings			
	U-Turn	Left	Thru	Right	U-Turn	Left	Thru	Right	U-Turn	Left	Thru	Right	U-Turn	Left	Thru	Right			West	East	South	North
7:00 AM	0	5	94	87	7	18	548	8	0	163	4	9	0	4	7	31	985	4,077	0	1	0	2
7:15 AM	1	4	149	90	1	9	465	7	0	219	6	14	0	2	5	42	1,014	4,179	0	0	0	0
7:30 AM	0	3	150	89	4	12	501	9	0	182	4	12	0	7	14	54	1,041	4,266	0	0	0	2
7:45 AM	0	8	152	105	2	7	406	10	0	229	7	25	0	8	23	55	1,037	4,198	0	0	0	0
8:00 AM	1	5	158	141	6	14	468	0	0	159	8	19	0	6	20	82	1,087	4,034	0	5	0	0
8:15 AM	1	8	143	143	4	19	346	6	0	246	6	21	0	9	10	139	1,101		0	1	0	0
8:30 AM	0	11	145	146	2	5	309	1	0	183	16	11	0	4	21	119	973		0	11	0	0
8:45 AM	0	2	120	118	4	10	289	0	0	161	7	18	0	1	19	124	873		0	7	0	0

Peak Rolling Hour Flow Rates

Vehicle Type	Eastbound				Westbound				Northbound				Southbound				Total
	U-Turn	Left	Thru	Right	U-Turn	Left	Thru	Right	U-Turn	Left	Thru	Right	U-Turn	Left	Thru	Right	
Articulated Trucks	0	0	12	1	0	2	16	0	0	10	0	0	0	0	0	0	41
Lights	2	24	559	460	16	50	1,677	25	0	789	23	73	0	29	64	327	4,118
Mediums	0	0	32	17	0	0	28	0	0	17	2	4	0	1	3	3	107
Total	2	24	603	478	16	52	1,721	25	0	816	25	77	0	30	67	330	4,266

11/8/18

Level Of Service Computation Report
2000 HCM Operations Method (Base Volume Alternative)

Intersection #5802 MONTAGUE EXPWY/TRADE ZONE BLVD

Cycle (sec):	189	Critical Vol./Cap.(X):	1.005
Loss Time (sec):	12	Average Delay (sec/veh):	60.7
Optimal Cycle:	300	Level Of Service:	E

Approach:	North Bound			South Bound			East Bound			West Bound		
Movement:	L	T	R	L	T	R	L	T	R	L	T	R
Control:	Split Phase			Split Phase			Protected			Protected		
Rights:		Ovl			Ovl			Ovl			Ovl	
Min. Green:	30	30	30	14	14	14	15	101	101	23	109	109
Y+R:	5.3	5.3	5.3	5.4	5.4	5.4	4.9	5.8	5.8	4.6	5.8	5.8
Lanes:	2 1	0 0	1	1 1	0 0	1	1 0	3 0	1	1 0	3 0	1
Volume Module: >> Count Date: 8 Nov 2018 << 5:00 - 6:00 PM												
Base Vol:	528	71	165	31	124	78	82	1715	1216	202	828	71
Growth Adj:	1.00	1.00	1.00	1.00	1.00	1.00	1.00	1.00	1.00	1.00	1.00	1.00
Initial Bse:	528	71	165	31	124	78	82	1715	1216	202	828	71
User Adj:	1.00	1.00	1.00	1.00	1.00	1.00	1.00	1.00	1.00	1.00	1.00	1.00
PHF Adj:	1.00	1.00	1.00	1.00	1.00	1.00	1.00	1.00	1.00	1.00	1.00	1.00
PHF Volume:	528	71	165	31	124	78	82	1715	1216	202	828	71
Reduct Vol:	0	0	0	0	0	0	0	0	0	0	0	0
Reduced Vol:	528	71	165	31	124	78	82	1715	1216	202	828	71
PCE Adj:	1.00	1.00	1.00	1.00	1.00	1.00	1.00	1.00	1.00	1.00	1.00	1.00
MLF Adj:	1.00	1.00	1.00	1.00	1.00	1.00	1.00	1.00	1.00	1.00	1.00	1.00
FinalVolume:	528	71	165	31	124	78	82	1715	1216	202	828	71
Saturation Flow Module:												
Sat/Lane:	1900	1900	1900	1900	1900	1900	1900	1900	1900	1900	1900	1900
Adjustment:	0.67	0.95	0.92	1.38	0.50	0.92	0.92	1.00	0.92	0.92	1.00	0.92
Lanes:	2.74	0.26	1.00	1.00	1.00	1.00	1.00	3.00	1.00	1.00	3.00	1.00
Final Sat.:	3483	468	1750	2625	950	1750	1750	5700	1750	1750	5700	1750
Capacity Analysis Module:												
Vol/Sat:	0.15	0.15	0.09	0.01	0.13	0.04	0.05	0.30	0.69	0.12	0.15	0.04
Crit Moves:	****				****				****	****		
Green Time:	30.0	30.0	53.0	24.3	24.3	39.1	14.8	101	131.0	23.0	108	132.2
Volume/Cap:	0.96	0.96	0.34	0.09	1.02	0.22	0.60	0.56	1.00	0.95	0.25	0.06
Uniform Del:	78.8	78.8	54.0	72.6	82.4	62.2	84.2	29.3	29.0	82.4	20.4	8.9
IncremntDel:	25.2	25.2	0.4	0.0	77.2	0.3	7.0	0.2	26.4	47.1	0.0	0.0
InitQueuDel:	0.0	0.0	0.0	0.0	0.0	0.0	0.0	0.0	0.0	0.0	0.0	0.0
Delay Adj:	1.00	1.00	1.00	1.00	1.00	1.00	1.00	1.29	1.63	1.00	1.34	1.65
Delay/Veh:	104.0	104	54.4	72.7	160	62.5	91.2	37.9	73.7	129.5	27.4	14.7
User DelAdj:	1.00	1.00	1.00	1.00	1.00	1.00	1.00	1.00	1.00	1.00	1.00	1.00
AdjDel/Veh:	104.0	104	54.4	72.7	160	62.5	91.2	37.9	73.7	129.5	27.4	14.7
LOS by Move:	F	F	D-	E	F	E	F	D+	E	F	C	B
HCM2kAvgQ:	16	20	8	2	11	4	5	25	78	14	10	2

Note: Queue reported is the number of cars per lane.

Traffix 8.0.0715 (c) 2008 Dowling Assoc. Licensed to Hexagon Trans., San Jose

All Traffic Data Services Inc.

(303) 216-2439
www.alltrafficdata.net

Location: 17 CAPITOL AVE & MONTAGUE EXPY AM
Date: Thursday, May 23, 2019
Peak Hour: 07:45 AM - 08:45 AM
Peak 15-Minutes: 08:15 AM - 08:30 AM

Peak Hour - Motorized Vehicles

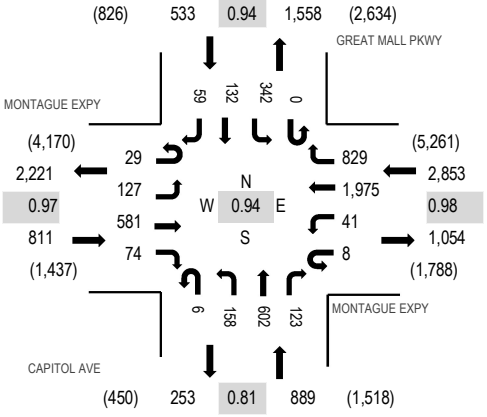

Peak Hour - Bicycles

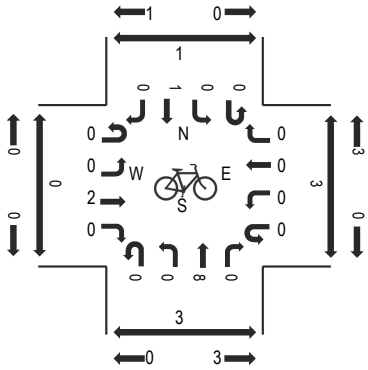

Peak Hour - Pedestrians

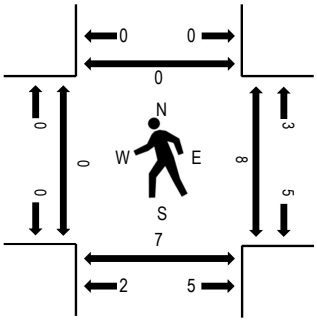

Note: Total study counts contained in parentheses.

Traffic Counts - Motorized Vehicles

Interval Start Time	MONTAGUE EXPY Eastbound				MONTAGUE EXPY Westbound				CAPITOL AVE Northbound				GREAT MALL PKWY Southbound				Total	Rolling Hour	Pedestrian Crossings			
	U-Turn	Left	Thru	Right	U-Turn	Left	Thru	Right	U-Turn	Left	Thru	Right	U-Turn	Left	Thru	Right			West	East	South	North
7:00 AM	12	12	95	13	0	10	379	115	0	22	59	14	0	23	11	7	772	4,041	0	0	1	1
7:15 AM	5	8	130	11	0	8	471	146	1	43	90	15	0	25	16	8	977	4,488	1	2	0	1
7:30 AM	16	15	112	6	2	13	433	164	1	40	129	28	0	46	26	10	1,041	4,860	1	1	0	1
7:45 AM	4	37	151	15	2	8	520	193	0	37	143	27	0	70	28	16	1,251	5,086	0	3	3	0
8:00 AM	10	28	137	18	0	15	456	200	1	41	131	39	0	96	34	13	1,219	5,001	0	2	2	0
8:15 AM	6	35	148	14	5	9	505	210	4	41	201	28	0	89	40	14	1,349		0	2	2	0
8:30 AM	9	27	145	27	1	9	494	226	1	39	127	29	0	87	30	16	1,267		0	1	0	0
8:45 AM	10	24	142	15	0	24	453	190	1	27	124	35	0	67	41	13	1,166		1	4	2	0

Peak Rolling Hour Flow Rates

Vehicle Type	Eastbound				Westbound				Northbound				Southbound				Total
	U-Turn	Left	Thru	Right	U-Turn	Left	Thru	Right	U-Turn	Left	Thru	Right	U-Turn	Left	Thru	Right	
Articulated Trucks	0	1	9	1	0	0	22	5	0	0	0	0	0	4	0	0	42
Lights	28	122	547	70	8	39	1,912	802	6	157	596	122	0	326	129	57	4,921
Mediums	1	4	25	3	0	2	41	22	0	1	6	1	0	12	3	2	123
Total	29	127	581	74	8	41	1,975	829	6	158	602	123	0	342	132	59	5,086

11/8/18

Level Of Service Computation Report
2000 HCM Operations Method (Base Volume Alternative)

Intersection #5803 MONTAGUE EXPWY/CAPITOL AVE

Cycle (sec):	190	Critical Vol./Cap.(X):	0.595
Loss Time (sec):	12	Average Delay (sec/veh):	50.6
Optimal Cycle:	178	Level Of Service:	D

Approach:	North Bound			South Bound			East Bound			West Bound		
Movement:	L	T	R	L	T	R	L	T	R	L	T	R
Control:	Protected			Protected			Protected			Protected		
Rights:	Include			Include			Ovl			Ovl		
Min. Green:	11	35	35	34	57	57	24	77	77	20	73	73
Y+R:	6.7	5.7	5.7	6.5	5.7	5.7	5.7	5.8	5.8	5.6	5.8	5.8
Lanes:	2 0	3 0	1	2 0	2 1	0	2 0	3 0	1	2 0	4 0	1
Volume Module: >> Count Date: 8 Nov 2018 << 5:00 - 6:00 PM												
Base Vol:	75	244	166	606	1281	65	177	1475	311	312	933	384
Growth Adj:	1.00	1.00	1.00	1.00	1.00	1.00	1.00	1.00	1.00	1.00	1.00	1.00
Initial Bse:	75	244	166	606	1281	65	177	1475	311	312	933	384
User Adj:	1.00	1.00	1.00	1.00	1.00	1.00	1.00	0.66	1.00	1.00	1.00	1.00
PHF Adj:	1.00	1.00	1.00	1.00	1.00	1.00	1.00	1.00	1.00	1.00	1.00	1.00
PHF Volume:	75	244	166	606	1281	65	177	974	311	312	933	384
Reduct Vol:	0	0	0	0	0	0	0	0	0	0	0	0
Reduced Vol:	75	244	166	606	1281	65	177	974	311	312	933	384
PCE Adj:	1.00	1.00	1.00	1.00	1.00	1.00	1.00	1.00	1.00	1.00	1.00	1.00
MLF Adj:	1.00	1.00	1.00	1.00	1.00	1.00	1.00	1.00	1.00	1.00	1.00	1.00
FinalVolume:	75	244	166	606	1281	65	177	974	311	312	933	384
Saturation Flow Module:												
Sat/Lane:	1900	1900	1900	1900	1900	1900	1900	1900	1900	1900	1900	1900
Adjustment:	0.83	1.00	0.92	0.83	0.98	0.95	0.83	1.00	0.92	0.83	1.00	0.92
Lanes:	2.00	3.00	1.00	2.00	2.85	0.15	2.00	3.00	1.00	2.00	4.00	1.00
Final Sat.:	3150	5700	1750	3150	5329	270	3150	5700	1750	3150	7600	1750
Capacity Analysis Module:												
Vol/Sat:	0.02	0.04	0.09	0.19	0.24	0.24	0.06	0.17	0.18	0.10	0.12	0.22
Crit Moves:			****	****				****		****		
Green Time:	12.7	35.0	35.0	43.6	65.9	65.9	24.6	77.0	89.7	22.4	74.8	118.4
Volume/Cap:	0.36	0.23	0.51	0.84	0.69	0.69	0.43	0.42	0.38	0.84	0.31	0.35
Uniform Del:	84.7	66.1	69.8	69.9	53.4	53.4	76.3	40.5	32.2	82.0	39.8	17.3
IncremntDel:	1.0	0.1	1.4	8.6	1.1	1.1	0.7	0.1	0.3	15.4	0.1	0.2
InitQueuDel:	0.0	0.0	0.0	0.0	0.0	0.0	0.0	0.0	0.0	0.0	0.0	0.0
Delay Adj:	1.00	1.00	1.00	1.00	1.00	1.00	1.00	0.89	0.81	1.00	0.90	0.52
Delay/Veh:	85.8	66.2	71.3	78.5	54.5	54.5	77.0	36.1	26.3	97.4	35.9	9.1
User DelAdj:	1.00	1.00	1.00	1.00	1.00	1.00	1.00	1.00	1.00	1.00	1.00	1.00
AdjDel/Veh:	85.8	66.2	71.3	78.5	54.5	54.5	77.0	36.1	26.3	97.4	35.9	9.1
LOS by Move:	F	E	E	E-	D-	D-	E-	D+	C	F	D+	A
HCM2kAvgQ:	3	4	10	22	23	23	5	11	9	11	7	6

Note: Queue reported is the number of cars per lane.

Traffix 8.0.0715 (c) 2008 Dowling Assoc. Licensed to Hexagon Trans., San Jose

ALL TRAFFIC DATA SERVICES
(303) 216-2439
www.alltrafficdata.net

Location: 1 MONTAGUE EXPY & SANGO CT AM
Date: Tuesday, June 29, 2021
Peak Hour: 08:00 AM - 09:00 AM
Peak 15-Minutes: 08:45 AM - 09:00 AM

Peak Hour - Motorized Vehicles

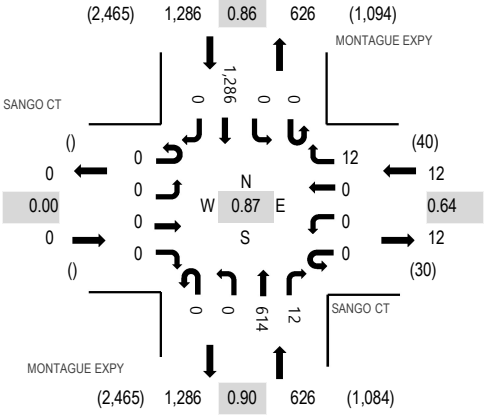

Peak Hour - Bicycles

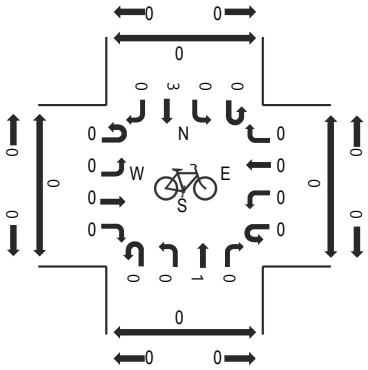

Peak Hour - Pedestrians

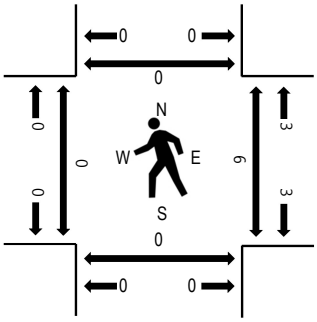

Note: Total study counts contained in parentheses.

Traffic Counts - Motorized Vehicles

Interval Start Time	SANGO CT Eastbound				SANGO CT Westbound				MONTAGUE EXPY Northbound				MONTAGUE EXPY Southbound				Total	Rolling Hour	Pedestrian Crossings			
	U-Turn	Left	Thru	Right	U-Turn	Left	Thru	Right	U-Turn	Left	Thru	Right	U-Turn	Left	Thru	Right			West	East	South	North
7:00 AM	0	0	0	0	0	0	0	7	0	0	94	3	0	0	246	0	350	1,665	0	0	0	0
7:15 AM	0	0	0	0	0	0	0	11	0	0	100	4	0	0	251	0	366	1,784	0	0	0	0
7:30 AM	0	0	0	0	0	0	0	6	0	0	121	3	0	0	319	0	449	1,866	0	1	0	0
7:45 AM	0	0	0	0	0	0	0	4	0	0	125	8	0	0	363	0	500	1,873	0	1	0	0
8:00 AM	0	0	0	0	0	0	0	4	0	0	142	6	0	0	317	0	469	1,924	0	1	0	0
8:15 AM	0	0	0	0	0	0	0	0	0	0	159	2	0	0	287	0	448		0	2	0	0
8:30 AM	0	0	0	0	0	0	0	6	0	0	142	1	0	0	307	0	456		0	3	0	0
8:45 AM	0	0	0	0	0	0	0	2	0	0	171	3	0	0	375	0	551		0	0	0	0

Peak Rolling Hour Flow Rates

Vehicle Type	Eastbound				Westbound				Northbound				Southbound				Total
	U-Turn	Left	Thru	Right	U-Turn	Left	Thru	Right	U-Turn	Left	Thru	Right	U-Turn	Left	Thru	Right	
Articulated Trucks	0	0	0	0	0	0	0	0	0	0	13	0	0	0	24	0	37
Lights	0	0	0	0	0	0	0	10	0	0	562	11	0	0	1,231	0	1,814
Mediums	0	0	0	0	0	0	0	2	0	0	39	1	0	0	31	0	73
Total	0	0	0	0	0	0	0	12	0	0	614	12	0	0	1,286	0	1,924

ALL TRAFFIC DATA SERVICES
(303) 216-2439
www.alltrafficdata.net

Location: 1 MONTAGUE EXPY & SANGO CT PM
Date: Tuesday, June 29, 2021
Peak Hour: 05:00 PM - 06:00 PM
Peak 15-Minutes: 05:45 PM - 06:00 PM

Peak Hour - Motorized Vehicles

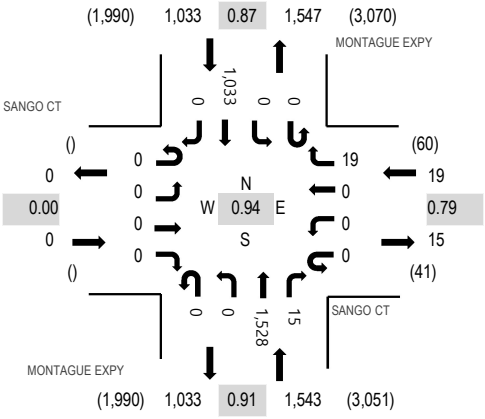

Peak Hour - Bicycles

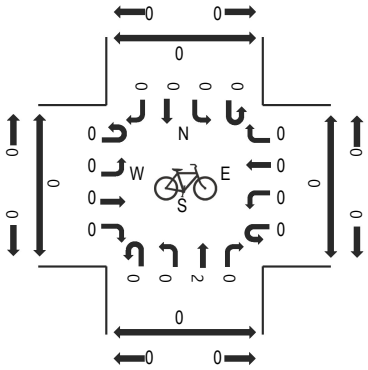

Peak Hour - Pedestrians

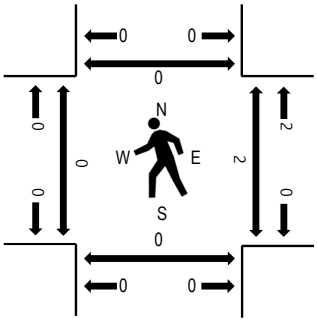

Note: Total study counts contained in parentheses.

Traffic Counts - Motorized Vehicles

Interval Start Time	SANGO CT Eastbound				SANGO CT Westbound				MONTAGUE EXPY Northbound				MONTAGUE EXPY Southbound				Total	Rolling Hour	Pedestrian Crossings			
	U-Turn	Left	Thru	Right	U-Turn	Left	Thru	Right	U-Turn	Left	Thru	Right	U-Turn	Left	Thru	Right			West	East	South	North
4:00 PM	0	0	0	0	0	0	0	9	0	0	345	6	0	0	237	0	597	2,506	0	0	0	0
4:15 PM	0	0	0	0	0	0	0	13	0	0	382	6	0	0	228	0	629	2,517	0	0	0	0
4:30 PM	0	0	0	0	0	0	0	9	0	0	348	9	0	0	259	0	625	2,506	0	0	0	0
4:45 PM	0	0	0	0	0	0	0	10	0	0	407	5	0	0	233	0	655	2,563	0	0	0	0
5:00 PM	0	0	0	0	0	0	0	2	0	0	355	2	0	0	249	0	608	2,595	0	0	0	0
5:15 PM	0	0	0	0	0	0	0	5	0	0	381	2	0	0	230	0	618		0	1	0	0
5:30 PM	0	0	0	0	0	0	0	5	0	0	376	5	0	0	296	0	682		0	0	0	0
5:45 PM	0	0	0	0	0	0	0	7	0	0	416	6	0	0	258	0	687		0	1	0	0

Peak Rolling Hour Flow Rates

Vehicle Type	Eastbound				Westbound				Northbound				Southbound				Total
	U-Turn	Left	Thru	Right	U-Turn	Left	Thru	Right	U-Turn	Left	Thru	Right	U-Turn	Left	Thru	Right	
Articulated Trucks	0	0	0	0	0	0	0	0	0	0	8	0	0	0	12	0	20
Lights	0	0	0	0	0	0	0	18	0	0	1,492	14	0	0	1,000	0	2,524
Mediums	0	0	0	0	0	0	0	1	0	0	28	1	0	0	21	0	51
Total	0	0	0	0	0	0	0	19	0	0	1,528	15	0	0	1,033	0	2,595

Milpitas Boulevard Extension Bridge

Level Of Service Computation Report
2000 HCM Operations (Future Volume Alternative)
Existing AM

Intersection #1: CAPITOL AVE/MILPITAS BLVD

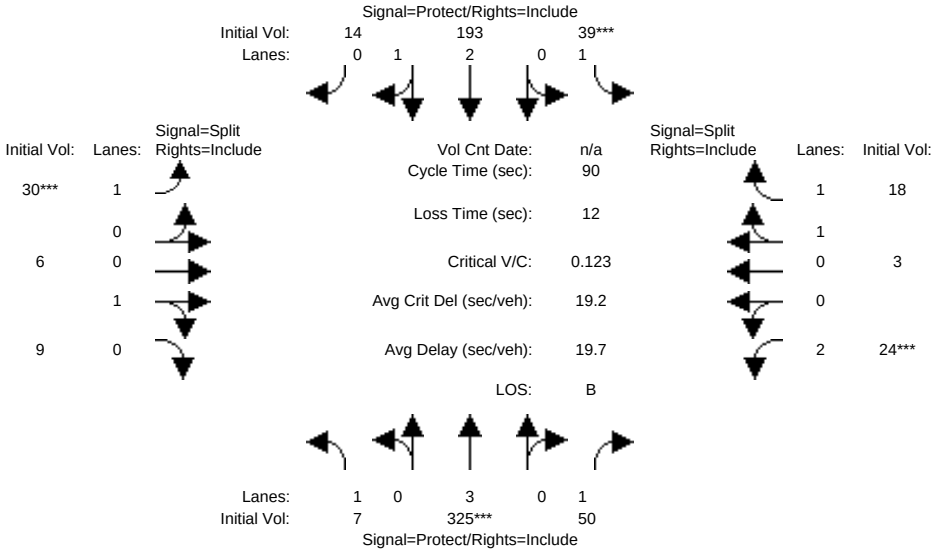

Approach:	North Bound			South Bound			East Bound			West Bound		
Movement:	L -	T -	R	L -	T -	R	L -	T -	R	L -	T -	R
Min. Green:	7	10	10	7	10	10	10	10	10	10	10	10
Y+R:	4.0	4.0	4.0	4.0	4.0	4.0	4.0	4.0	4.0	4.0	4.0	4.0
Volume Module:												
Base Vol:	7	325	50	39	193	14	30	6	9	24	3	18
Growth Adj:	1.00	1.00	1.00	1.00	1.00	1.00	1.00	1.00	1.00	1.00	1.00	1.00
Initial Bse:	7	325	50	39	193	14	30	6	9	24	3	18
Added Vol:	0	0	0	0	0	0	0	0	0	0	0	0
PasserByVol:	0	0	0	0	0	0	0	0	0	0	0	0
Initial Fut:	7	325	50	39	193	14	30	6	9	24	3	18
User Adj:	1.00	1.00	1.00	1.00	1.00	1.00	1.00	1.00	1.00	1.00	1.00	1.00
PHF Adj:	1.00	1.00	1.00	1.00	1.00	1.00	1.00	1.00	1.00	1.00	1.00	1.00
PHF Volume:	7	325	50	39	193	14	30	6	9	24	3	18
Reduct Vol:	0	0	0	0	0	0	0	0	0	0	0	0
Reduced Vol:	7	325	50	39	193	14	30	6	9	24	3	18
PCE Adj:	1.00	1.00	1.00	1.00	1.00	1.00	1.00	1.00	1.00	1.00	1.00	1.00
MLF Adj:	1.00	1.00	1.00	1.00	1.00	1.00	1.00	1.00	1.00	1.00	1.00	1.00
FinalVolume:	7	325	50	39	193	14	30	6	9	24	3	18
Saturation Flow Module:												
Sat/Lane:	1900	1900	1900	1900	1900	1900	1900	1900	1900	1900	1900	1900
Adjustment:	0.87	1.00	0.74	0.87	0.99	0.91	0.87	0.91	0.84	0.79	0.87	0.79
Lanes:	1.00	3.00	1.00	1.00	2.78	0.22	1.00	0.38	0.62	2.00	0.26	1.74
Final Sat.:	1663	5700	1412	1663	5230	379	1663	658	987	2993	435	2607
Capacity Analysis Module:												
Vol/Sat:	0.00	0.06	0.04	0.02	0.04	0.04	0.02	0.01	0.01	0.01	0.01	0.01
Crit Moves:		****		****			****			****		
Green/Cycle:	0.25	0.44	0.44	0.18	0.36	0.36	0.14	0.14	0.14	0.11	0.11	0.11
Volume/Cap:	0.02	0.13	0.08	0.13	0.10	0.10	0.13	0.07	0.07	0.07	0.06	0.06
Delay/Veh:	25.2	15.1	14.8	31.2	19.0	19.0	34.3	33.8	33.8	35.9	35.9	35.9
User DelAdj:	1.00	1.00	1.00	1.00	1.00	1.00	1.00	1.00	1.00	1.00	1.00	1.00
AdjDel/Veh:	25.2	15.1	14.8	31.2	19.0	19.0	34.3	33.8	33.8	35.9	35.9	35.9
LOS by Move:	C	B	B	C	B	B	C	C	C	D	D	D
HCM2kAvgQ:	0	2	1	1	1	1	1	0	0	0	0	0

Note: Queue reported is the number of cars per lane.

Milpitas Boulevard Extension Bridge

Level Of Service Computation Report
2000 HCM Operations (Future Volume Alternative)
Background AM

Intersection #1: CAPITOL AVE/MILPITAS BLVD

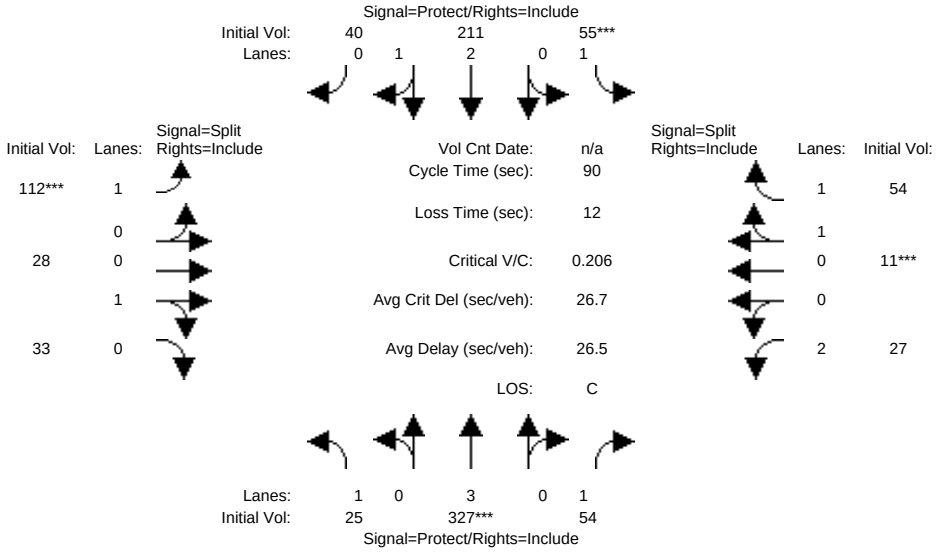

Approach:	North Bound			South Bound			East Bound			West Bound		
Movement:	L -	T -	R	L -	T -	R	L -	T -	R	L -	T -	R
Min. Green:	7	10	10	7	10	10	10	10	10	10	10	10
Y+R:	4.0	4.0	4.0	4.0	4.0	4.0	4.0	4.0	4.0	4.0	4.0	4.0
Volume Module:												
Base Vol:	25	327	54	55	211	40	112	28	33	27	11	54
Growth Adj:	1.00	1.00	1.00	1.00	1.00	1.00	1.00	1.00	1.00	1.00	1.00	1.00
Initial Bse:	25	327	54	55	211	40	112	28	33	27	11	54
Added Vol:	0	0	0	0	0	0	0	0	0	0	0	0
PasserByVol:	0	0	0	0	0	0	0	0	0	0	0	0
Initial Fut:	25	327	54	55	211	40	112	28	33	27	11	54
User Adj:	1.00	1.00	1.00	1.00	1.00	1.00	1.00	1.00	1.00	1.00	1.00	1.00
PHF Adj:	1.00	1.00	1.00	1.00	1.00	1.00	1.00	1.00	1.00	1.00	1.00	1.00
PHF Volume:	25	327	54	55	211	40	112	28	33	27	11	54
Reduct Vol:	0	0	0	0	0	0	0	0	0	0	0	0
Reduced Vol:	25	327	54	55	211	40	112	28	33	27	11	54
PCE Adj:	1.00	1.00	1.00	1.00	1.00	1.00	1.00	1.00	1.00	1.00	1.00	1.00
MLF Adj:	1.00	1.00	1.00	1.00	1.00	1.00	1.00	1.00	1.00	1.00	1.00	1.00
FinalVolume:	25	327	54	55	211	40	112	28	33	27	11	54
Saturation Flow Module:												
Sat/Lane:	1900	1900	1900	1900	1900	1900	1900	1900	1900	1900	1900	1900
Adjustment:	0.87	1.00	0.78	0.87	0.98	0.90	0.87	0.92	0.85	0.79	0.88	0.81
Lanes:	1.00	3.00	1.00	1.00	2.49	0.51	1.00	0.44	0.56	2.00	0.32	1.68
Final Sat.:	1663	5700	1488	1663	4614	875	1663	766	903	2993	525	2579
Capacity Analysis Module:												
Vol/Sat:	0.02	0.06	0.04	0.03	0.05	0.05	0.07	0.04	0.04	0.01	0.02	0.02
Crit Moves:		****		****			****				****	
Green/Cycle:	0.18	0.27	0.27	0.16	0.25	0.25	0.32	0.32	0.32	0.11	0.11	0.11
Volume/Cap:	0.08	0.21	0.13	0.21	0.18	0.18	0.21	0.11	0.11	0.08	0.19	0.19
Delay/Veh:	31.0	25.2	24.7	33.4	26.3	26.3	22.3	21.5	21.5	36.0	36.6	36.6
User DelAdj:	1.00	1.00	1.00	1.00	1.00	1.00	1.00	1.00	1.00	1.00	1.00	1.00
AdjDel/Veh:	31.0	25.2	24.7	33.4	26.3	26.3	22.3	21.5	21.5	36.0	36.6	36.6
LOS by Move:	C	C	C	C	C	C	C	C	C	D	D	D
HCM2kAvgQ:	1	2	1	2	2	2	2	1	1	0	1	1

Note: Queue reported is the number of cars per lane.

Milpitas Boulevard Extension Bridge

Level Of Service Computation Report
2000 HCM Operations (Future Volume Alternative)
Background + Project AM

Intersection #1: CAPITOL AVE/MILPITAS BLVD

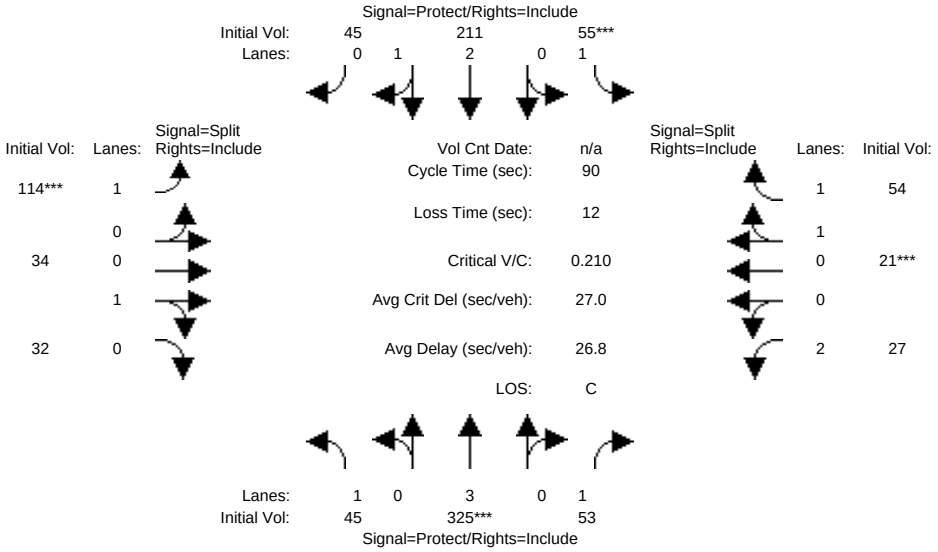

Approach:	North Bound			South Bound			East Bound			West Bound		
Movement:	L -	T -	R	L -	T -	R	L -	T -	R	L -	T -	R
Min. Green:	7	10	10	7	10	10	10	10	10	10	10	10
Y+R:	4.0	4.0	4.0	4.0	4.0	4.0	4.0	4.0	4.0	4.0	4.0	4.0
Volume Module:												
Base Vol:	45	325	53	55	211	45	114	34	32	27	21	54
Growth Adj:	1.00	1.00	1.00	1.00	1.00	1.00	1.00	1.00	1.00	1.00	1.00	1.00
Initial Bse:	45	325	53	55	211	45	114	34	32	27	21	54
Added Vol:	0	0	0	0	0	0	0	0	0	0	0	0
PasserByVol:	0	0	0	0	0	0	0	0	0	0	0	0
Initial Fut:	45	325	53	55	211	45	114	34	32	27	21	54
User Adj:	1.00	1.00	1.00	1.00	1.00	1.00	1.00	1.00	1.00	1.00	1.00	1.00
PHF Adj:	1.00	1.00	1.00	1.00	1.00	1.00	1.00	1.00	1.00	1.00	1.00	1.00
PHF Volume:	45	325	53	55	211	45	114	34	32	27	21	54
Reduct Vol:	0	0	0	0	0	0	0	0	0	0	0	0
Reduced Vol:	45	325	53	55	211	45	114	34	32	27	21	54
PCE Adj:	1.00	1.00	1.00	1.00	1.00	1.00	1.00	1.00	1.00	1.00	1.00	1.00
MLF Adj:	1.00	1.00	1.00	1.00	1.00	1.00	1.00	1.00	1.00	1.00	1.00	1.00
FinalVolume:	45	325	53	55	211	45	114	34	32	27	21	54
Saturation Flow Module:												
Sat/Lane:	1900	1900	1900	1900	1900	1900	1900	1900	1900	1900	1900	1900
Adjustment:	0.87	1.00	0.78	0.87	0.97	0.90	0.87	0.93	0.85	0.79	0.89	0.82
Lanes:	1.00	3.00	1.00	1.00	2.44	0.56	1.00	0.49	0.51	2.00	0.53	1.47
Final Sat.:	1663	5700	1488	1663	4508	961	1663	871	820	2993	894	2299
Capacity Analysis Module:												
Vol/Sat:	0.03	0.06	0.04	0.03	0.05	0.05	0.07	0.04	0.04	0.01	0.02	0.02
Crit Moves:		****		****			****				****	
Green/Cycle:	0.18	0.27	0.27	0.16	0.25	0.25	0.33	0.33	0.33	0.11	0.11	0.11
Volume/Cap:	0.15	0.21	0.13	0.21	0.19	0.19	0.21	0.12	0.12	0.08	0.21	0.21
Delay/Veh:	31.6	25.4	24.9	33.4	26.5	26.5	22.1	21.4	21.4	35.9	36.7	36.7
User DelAdj:	1.00	1.00	1.00	1.00	1.00	1.00	1.00	1.00	1.00	1.00	1.00	1.00
AdjDel/Veh:	31.6	25.4	24.9	33.4	26.5	26.5	22.1	21.4	21.4	35.9	36.7	36.7
LOS by Move:	C	C	C	C	C	C	C	C	C	D	D	D
HCM2kAvgQ:	1	2	1	2	2	2	3	1	1	0	1	1

Note: Queue reported is the number of cars per lane.

Milpitas Boulevard Extension Bridge

Level Of Service Computation Report
2000 HCM Operations (Future Volume Alternative)
Existing AM

Intersection #2: LUNDY/TRADE ZONE

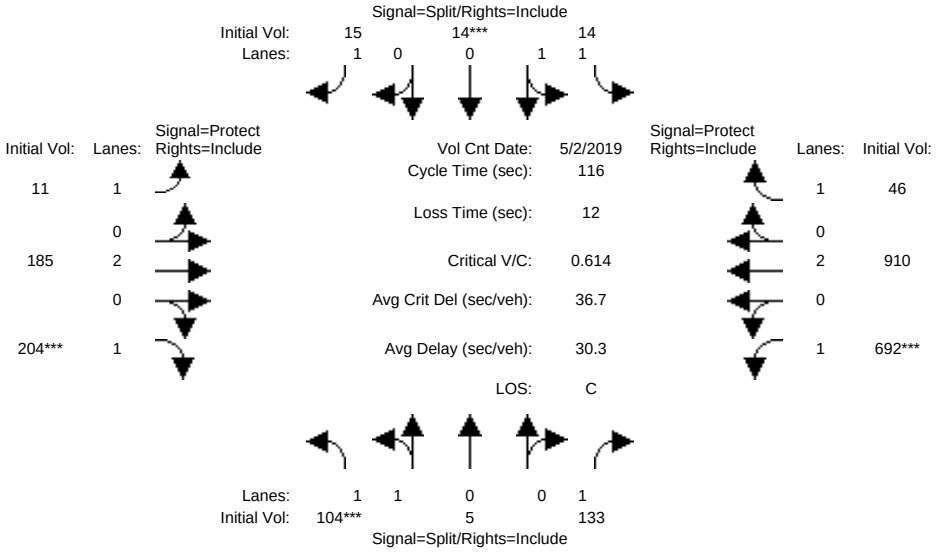

Approach:	North Bound			South Bound			East Bound			West Bound		
Movement:	L -	T -	R	L -	T -	R	L -	T -	R	L -	T -	R
Min. Green:	10	10	10	10	10	10	7	10	10	7	10	10
Y+R:	4.0	4.0	4.0	4.0	4.0	4.0	4.0	4.0	4.0	4.0	4.0	4.0
Volume Module: >> Count Date: 2 May 2019 << 7:50-8:50												
Base Vol:	104	5	133	14	14	15	11	185	204	692	910	46
Growth Adj:	1.00	1.00	1.00	1.00	1.00	1.00	1.00	1.00	1.00	1.00	1.00	1.00
Initial Bse:	104	5	133	14	14	15	11	185	204	692	910	46
Added Vol:	0	0	0	0	0	0	0	0	0	0	0	0
PasserByVol:	0	0	0	0	0	0	0	0	0	0	0	0
Initial Fut:	104	5	133	14	14	15	11	185	204	692	910	46
User Adj:	1.00	1.00	1.00	1.00	1.00	1.00	1.00	1.00	1.00	1.00	1.00	1.00
PHF Adj:	1.00	1.00	1.00	1.00	1.00	1.00	1.00	1.00	1.00	1.00	1.00	1.00
PHF Volume:	104	5	133	14	14	15	11	185	204	692	910	46
Reduct Vol:	0	0	0	0	0	0	0	0	0	0	0	0
Reduced Vol:	104	5	133	14	14	15	11	185	204	692	910	46
PCE Adj:	1.00	1.00	1.00	1.00	1.00	1.00	1.00	1.00	1.00	1.00	1.00	1.00
MLF Adj:	1.00	1.00	1.00	1.00	1.00	1.00	1.00	1.00	1.00	1.00	1.00	1.00
FinalVolume:	104	5	133	14	14	15	11	185	204	692	910	46
Saturation Flow Module:												
Sat/Lane:	1900	1900	1900	1900	1900	1900	1900	1900	1900	1900	1900	1900
Adjustment:	0.92	1.00	0.92	0.92	1.00	0.92	0.92	1.00	0.92	0.92	1.00	0.92
Lanes:	1.92	0.08	1.00	1.04	0.96	1.00	1.00	2.00	1.00	1.00	2.00	1.00
Final Sat.:	3352	161	1750	1822	1822	1750	1750	3800	1750	1750	3800	1750
Capacity Analysis Module:												
Vol/Sat:	0.03	0.03	0.08	0.01	0.01	0.01	0.01	0.05	0.12	0.40	0.24	0.03
Crit Moves:	****				****				****	****		
Green/Cycle:	0.12	0.12	0.12	0.09	0.09	0.09	0.14	0.16	0.16	0.53	0.55	0.55
Volume/Cap:	0.25	0.25	0.61	0.09	0.09	0.10	0.05	0.31	0.75	0.75	0.44	0.05
Delay/Veh:	47.3	47.3	60.6	49.4	49.4	50.2	43.7	44.8	63.6	26.6	16.2	12.2
User DelAdj:	1.00	1.00	1.00	1.00	1.00	1.00	1.00	1.00	1.00	1.00	1.00	1.00
AdjDel/Veh:	47.3	47.3	60.6	49.4	49.4	50.2	43.7	44.8	63.6	26.6	16.2	12.2
LOS by Move:	D	D	E	D	D	D	D	D	E	C	B	B
HCM2kAvgQ:	2	2	6	1	1	1	0	3	9	22	9	1

Note: Queue reported is the number of cars per lane.

Milpitas Boulevard Extension Bridge

Level Of Service Computation Report
2000 HCM Operations (Future Volume Alternative)
Background AM

Intersection #2: LUNDY/TRADE ZONE

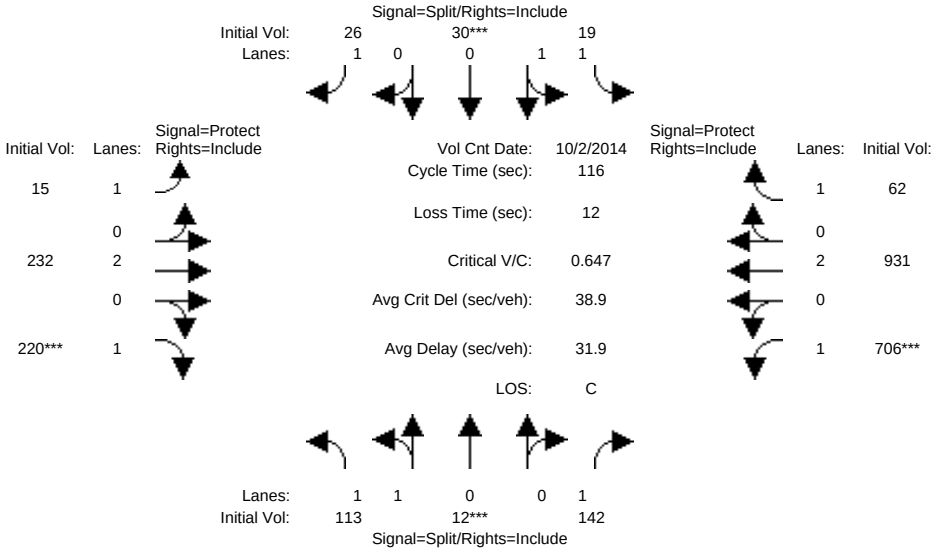

Approach:	North Bound			South Bound			East Bound			West Bound		
Movement:	L -	T -	R	L -	T -	R	L -	T -	R	L -	T -	R
Min. Green:	10	10	10	10	10	10	7	10	10	7	10	10
Y+R:	4.0	4.0	4.0	4.0	4.0	4.0	4.0	4.0	4.0	4.0	4.0	4.0
Volume Module: >> Count Date: 2 Oct 2014 << 7:50-8:50												
Base Vol:	113	12	142	19	30	26	15	232	220	706	931	62
Growth Adj:	1.00	1.00	1.00	1.00	1.00	1.00	1.00	1.00	1.00	1.00	1.00	1.00
Initial Bse:	113	12	142	19	30	26	15	232	220	706	931	62
Added Vol:	0	0	0	0	0	0	0	0	0	0	0	0
PasserByVol:	0	0	0	0	0	0	0	0	0	0	0	0
Initial Fut:	113	12	142	19	30	26	15	232	220	706	931	62
User Adj:	1.00	1.00	1.00	1.00	1.00	1.00	1.00	1.00	1.00	1.00	1.00	1.00
PHF Adj:	1.00	1.00	1.00	1.00	1.00	1.00	1.00	1.00	1.00	1.00	1.00	1.00
PHF Volume:	113	12	142	19	30	26	15	232	220	706	931	62
Reduct Vol:	0	0	0	0	0	0	0	0	0	0	0	0
Reduced Vol:	113	12	142	19	30	26	15	232	220	706	931	62
PCE Adj:	1.00	1.00	1.00	1.00	1.00	1.00	1.00	1.00	1.00	1.00	1.00	1.00
MLF Adj:	1.00	1.00	1.00	1.00	1.00	1.00	1.00	1.00	1.00	1.00	1.00	1.00
FinalVolume:	113	12	142	19	30	26	15	232	220	706	931	62
Saturation Flow Module:												
Sat/Lane:	1900	1900	1900	1900	1900	1900	1900	1900	1900	1900	1900	1900
Adjustment:	0.92	1.00	0.92	0.92	1.00	0.92	0.92	1.00	0.92	0.92	1.00	0.92
Lanes:	1.82	0.18	1.00	1.00	1.00	1.00	1.00	2.00	1.00	1.00	2.00	1.00
Final Sat.:	3188	339	1750	1750	1900	1750	1750	3800	1750	1750	3800	1750
Capacity Analysis Module:												
Vol/Sat:	0.04	0.04	0.08	0.01	0.02	0.01	0.01	0.06	0.13	0.40	0.25	0.04
Crit Moves:		****			****				****	****		
Green/Cycle:	0.13	0.13	0.13	0.09	0.09	0.09	0.14	0.16	0.16	0.52	0.55	0.55
Volume/Cap:	0.28	0.28	0.65	0.13	0.18	0.17	0.06	0.38	0.77	0.77	0.45	0.06
Delay/Veh:	47.6	47.6	62.1	49.6	50.7	51.6	44.2	45.0	64.7	28.5	16.3	12.3
User DelAdj:	1.00	1.00	1.00	1.00	1.00	1.00	1.00	1.00	1.00	1.00	1.00	1.00
AdjDel/Veh:	47.6	47.6	62.1	49.6	50.7	51.6	44.2	45.0	64.7	28.5	16.3	12.3
LOS by Move:	D	D	E	D	D	D	D	D	E	C	B	B
HCM2kAvgQ:	2	2	6	1	1	1	1	4	10	23	10	1

Note: Queue reported is the number of cars per lane.

Milpitas Boulevard Extension Bridge

Level Of Service Computation Report
2000 HCM Operations (Future Volume Alternative)
Background + Project AM

Intersection #2: LUNDY/TRADE ZONE

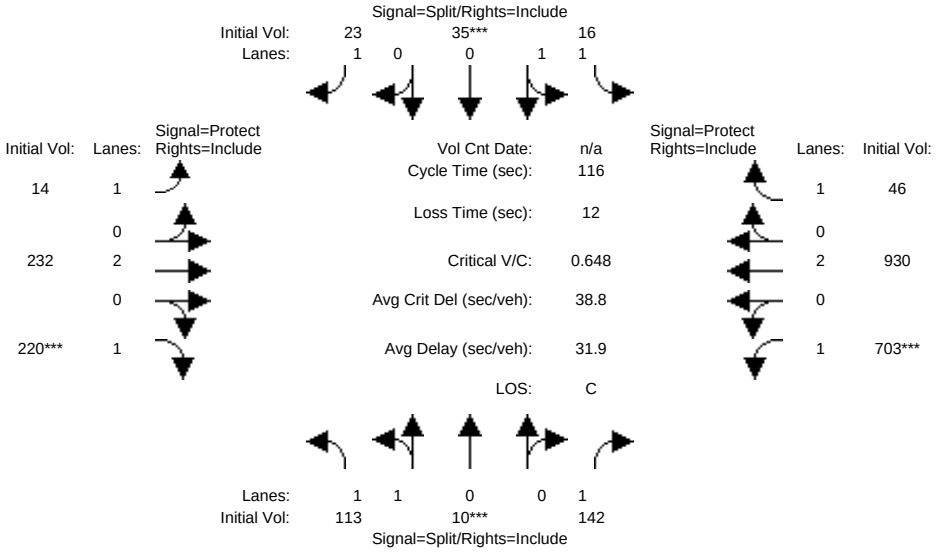

Approach:	North Bound			South Bound			East Bound			West Bound		
Movement:	L -	T -	R	L -	T -	R	L -	T -	R	L -	T -	R
Min. Green:	10	10	10	10	10	10	7	10	10	7	10	10
Y+R:	4.0	4.0	4.0	4.0	4.0	4.0	4.0	4.0	4.0	4.0	4.0	4.0
Volume Module:												
Base Vol:	113	10	142	16	35	23	14	232	220	703	930	46
Growth Adj:	1.00	1.00	1.00	1.00	1.00	1.00	1.00	1.00	1.00	1.00	1.00	1.00
Initial Bse:	113	10	142	16	35	23	14	232	220	703	930	46
Added Vol:	0	0	0	0	0	0	0	0	0	0	0	0
PasserByVol:	0	0	0	0	0	0	0	0	0	0	0	0
Initial Fut:	113	10	142	16	35	23	14	232	220	703	930	46
User Adj:	1.00	1.00	1.00	1.00	1.00	1.00	1.00	1.00	1.00	1.00	1.00	1.00
PHF Adj:	1.00	1.00	1.00	1.00	1.00	1.00	1.00	1.00	1.00	1.00	1.00	1.00
PHF Volume:	113	10	142	16	35	23	14	232	220	703	930	46
Reduct Vol:	0	0	0	0	0	0	0	0	0	0	0	0
Reduced Vol:	113	10	142	16	35	23	14	232	220	703	930	46
PCE Adj:	1.00	1.00	1.00	1.00	1.00	1.00	1.00	1.00	1.00	1.00	1.00	1.00
MLF Adj:	1.00	1.00	1.00	1.00	1.00	1.00	1.00	1.00	1.00	1.00	1.00	1.00
FinalVolume:	113	10	142	16	35	23	14	232	220	703	930	46
Saturation Flow Module:												
Sat/Lane:	1900	1900	1900	1900	1900	1900	1900	1900	1900	1900	1900	1900
Adjustment:	0.92	1.00	0.92	0.92	1.00	0.92	0.92	1.00	0.92	0.92	1.00	0.92
Lanes:	1.85	0.15	1.00	1.00	1.00	1.00	1.00	2.00	1.00	1.00	2.00	1.00
Final Sat.:	3236	286	1750	1750	1900	1750	1750	3800	1750	1750	3800	1750
Capacity Analysis Module:												
Vol/Sat:	0.03	0.03	0.08	0.01	0.02	0.01	0.01	0.06	0.13	0.40	0.24	0.03
Crit Moves:		****			****				****	****		
Green/Cycle:	0.13	0.13	0.13	0.09	0.09	0.09	0.14	0.16	0.16	0.52	0.55	0.55
Volume/Cap:	0.28	0.28	0.65	0.11	0.21	0.15	0.06	0.37	0.77	0.77	0.45	0.05
Delay/Veh:	47.6	47.6	62.2	49.3	51.4	51.2	44.2	45.0	64.4	28.4	16.3	12.2
User DelAdj:	1.00	1.00	1.00	1.00	1.00	1.00	1.00	1.00	1.00	1.00	1.00	1.00
AdjDel/Veh:	47.6	47.6	62.2	49.3	51.4	51.2	44.2	45.0	64.4	28.4	16.3	12.2
LOS by Move:	D	D	E	D	D	D	D	D	E	C	B	B
HCM2kAvgQ:	2	2	6	1	1	1	0	4	10	23	10	1

Note: Queue reported is the number of cars per lane.

Milpitas Boulevard Extension Bridge

Level Of Service Computation Report
2000 HCM Operations (Future Volume Alternative)
Existing AM

Intersection #3: MONTAGUE EXPWY/TRADE ZONE BLVD

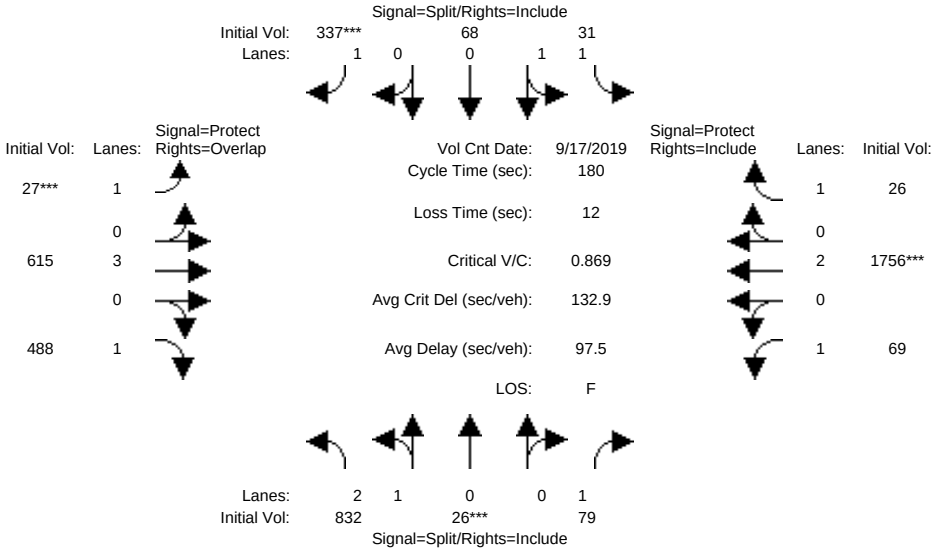

Street Name:	Trade Zone Blvd						Montague Expressway					
Approach:	North Bound			South Bound			East Bound			West Bound		
Movement:	L -	T -	R	L -	T -	R	L -	T -	R	L -	T -	R
Min. Green:	10	10	10	10	10	10	7	100	10	7	107	10
Y+R:	4.0	4.0	4.0	4.0	4.0	4.0	4.0	4.0	4.0	4.0	4.0	4.0
Volume Module: >> Count Date: 17 Sep 2019 << 7:00-9:00												
Base Vol:	832	26	79	31	68	337	27	615	488	69	1756	26
Growth Adj:	1.00	1.00	1.00	1.00	1.00	1.00	1.00	1.00	1.00	1.00	1.00	1.00
Initial Bse:	832	26	79	31	68	337	27	615	488	69	1756	26
Added Vol:	0	0	0	0	0	0	0	0	0	0	0	0
PasserByVol:	0	0	0	0	0	0	0	0	0	0	0	0
Initial Fut:	832	26	79	31	68	337	27	615	488	69	1756	26
User Adj:	1.00	1.00	1.00	1.00	1.00	1.00	1.00	1.00	1.00	1.00	0.82	1.00
PHF Adj:	1.00	1.00	1.00	1.00	1.00	1.00	1.00	1.00	1.00	1.00	1.00	1.00
PHF Volume:	832	26	79	31	68	337	27	615	488	69	1440	26
Reduct Vol:	0	0	0	0	0	0	0	0	0	0	0	0
Reduced Vol:	832	26	79	31	68	337	27	615	488	69	1440	26
PCE Adj:	1.00	1.00	1.00	1.00	1.00	1.00	1.00	1.00	1.00	1.00	1.00	1.00
MLF Adj:	1.00	1.00	1.00	1.00	1.00	1.00	1.00	1.00	1.00	1.00	1.00	1.00
FinalVolume:	832	26	79	31	68	337	27	615	488	69	1440	26
Saturation Flow Module:												
Sat/Lane:	1900	1900	1900	1900	1900	1900	1900	1900	1900	1900	1900	1900
Adjustment:	0.79	0.95	0.75	0.91	0.99	0.78	0.87	1.00	0.78	0.87	1.00	0.77
Lanes:	2.92	0.08	1.00	1.00	1.00	1.00	1.00	3.00	1.00	1.00	2.00	1.00
Final Sat.:	4394	137	1433	1724	1872	1488	1663	5700	1488	1663	3800	1470
Capacity Analysis Module:												
Vol/Sat:	0.19	0.19	0.06	0.02	0.04	0.23	0.02	0.11	0.33	0.04	0.38	0.02
Crit Moves:		****				****	****				****	
Green/Cycle:	0.14	0.14	0.14	0.16	0.16	0.16	0.04	0.59	0.73	0.04	0.59	0.59
Volume/Cap:	1.39	1.39	0.40	0.11	0.22	1.39	0.42	0.18	0.45	0.94	0.64	0.03
Delay/Veh:	261.4	261	72.4	64.2	65.6	272.6	88.8	17.0	10.4	171.1	24.4	15.1
User DelAdj:	1.00	1.00	1.00	1.00	1.00	1.00	1.00	1.00	1.00	1.00	1.00	1.00
AdjDel/Veh:	261.4	261	72.4	64.2	65.6	272.6	88.8	17.0	10.4	171.1	24.4	15.1
LOS by Move:	F	F	E	E	E	F	F	B	B	F	C	B
HCM2kAvgQ:	32	32	5	2	3	34	2	5	12	7	25	1

Note: Queue reported is the number of cars per lane.

Milpitas Boulevard Extension Bridge

Level Of Service Computation Report
2000 HCM Operations (Future Volume Alternative)
Background AM

Intersection #3: MONTAGUE EXPWY/TRADE ZONE BLVD

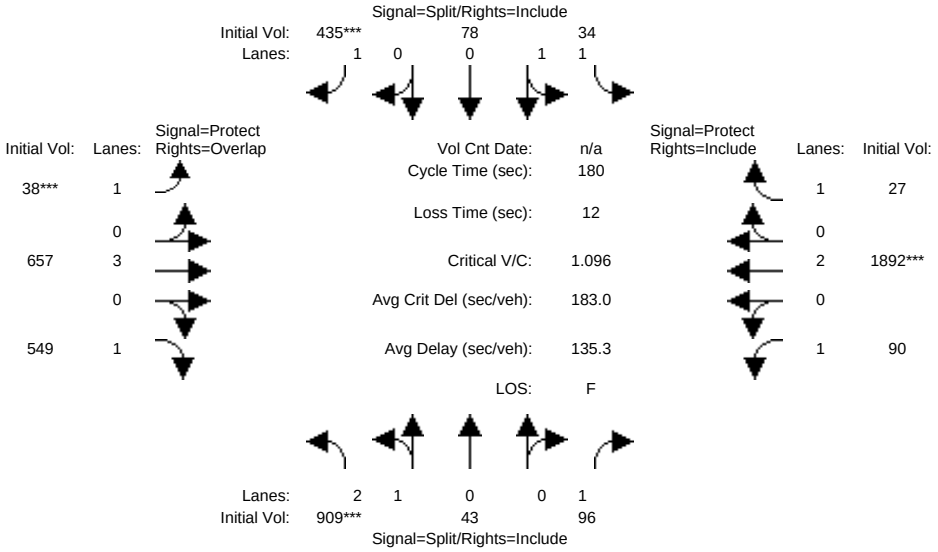

Street Name:	Trade Zone Blvd						Montague Expressway					
Approach:	North Bound			South Bound			East Bound			West Bound		
Movement:	L -	T -	R	L -	T -	R	L -	T -	R	L -	T -	R
Min. Green:	10	10	10	10	10	10	7	100	10	7	107	10
Y+R:	4.0	4.0	4.0	4.0	4.0	4.0	4.0	4.0	4.0	4.0	4.0	4.0
Volume Module:												
Base Vol:	909	43	96	34	78	435	38	657	549	90	1892	27
Growth Adj:	1.00	1.00	1.00	1.00	1.00	1.00	1.00	1.00	1.00	1.00	1.00	1.00
Initial Bse:	909	43	96	34	78	435	38	657	549	90	1892	27
Added Vol:	0	0	0	0	0	0	0	0	0	0	0	0
PasserByVol:	0	0	0	0	0	0	0	0	0	0	0	0
Initial Fut:	909	43	96	34	78	435	38	657	549	90	1892	27
User Adj:	1.00	1.00	1.00	1.00	1.00	1.00	1.00	1.00	1.00	1.00	1.00	1.00
PHF Adj:	1.00	1.00	1.00	1.00	1.00	1.00	1.00	1.00	1.00	1.00	1.00	1.00
PHF Volume:	909	43	96	34	78	435	38	657	549	90	1892	27
Reduct Vol:	0	0	0	0	0	0	0	0	0	0	0	0
Reduced Vol:	909	43	96	34	78	435	38	657	549	90	1892	27
PCE Adj:	1.00	1.00	1.00	1.00	1.00	1.00	1.00	1.00	1.00	1.00	1.00	1.00
MLF Adj:	1.00	1.00	1.00	1.00	1.00	1.00	1.00	1.00	1.00	1.00	1.00	1.00
FinalVolume:	909	43	96	34	78	435	38	657	549	90	1892	27
Saturation Flow Module:												
Sat/Lane:	1900	1900	1900	1900	1900	1900	1900	1900	1900	1900	1900	1900
Adjustment:	0.79	0.95	0.78	0.91	0.99	0.78	0.87	1.00	0.78	0.87	1.00	0.78
Lanes:	2.89	0.11	1.00	1.00	1.00	1.00	1.00	3.00	1.00	1.00	2.00	1.00
Final Sat.:	4338	205	1488	1724	1872	1488	1663	5700	1488	1663	3800	1488
Capacity Analysis Module:												
Vol/Sat:	0.21	0.21	0.06	0.02	0.04	0.29	0.02	0.12	0.37	0.05	0.50	0.02
Crit Moves:	****					****	****				****	
Green/Cycle:	0.13	0.13	0.13	0.17	0.17	0.17	0.04	0.58	0.70	0.06	0.59	0.59
Volume/Cap:	1.67	1.67	0.52	0.11	0.24	1.67	0.59	0.20	0.53	0.96	0.84	0.03
Delay/Veh:	389.4	389	76.1	62.6	64.2	393.6	98.4	18.2	13.1	165.3	32.4	15.1
User DelAdj:	1.00	1.00	1.00	1.00	1.00	1.00	1.00	1.00	1.00	1.00	1.00	1.00
AdjDel/Veh:	389.4	389	76.1	62.6	64.2	393.6	98.4	18.2	13.1	165.3	32.4	15.1
LOS by Move:	F	F	E	E	E	F	F	B	B	F	C	B
HCM2kAvgQ:	40	40	6	2	4	50	3	5	15	8	43	1

Note: Queue reported is the number of cars per lane.

Milpitas Boulevard Extension Bridge

Level Of Service Computation Report
2000 HCM Operations (Future Volume Alternative)
Background + Project AM

Intersection #3: MONTAGUE EXPWY/TRADE ZONE BLVD

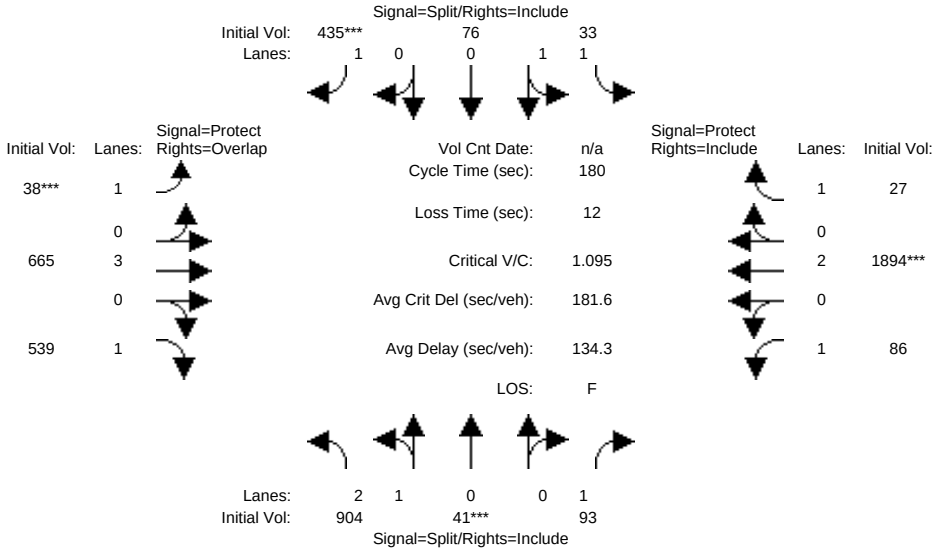

Street Name:	Trade Zone Blvd						Montague Expressway					
Approach:	North Bound			South Bound			East Bound			West Bound		
Movement:	L -	T -	R	L -	T -	R	L -	T -	R	L -	T -	R
Min. Green:	10	10	10	10	10	10	7	100	10	7	107	10
Y+R:	4.0	4.0	4.0	4.0	4.0	4.0	4.0	4.0	4.0	4.0	4.0	4.0
Volume Module:												
Base Vol:	904	41	93	33	76	435	38	665	539	86	1894	27
Growth Adj:	1.00	1.00	1.00	1.00	1.00	1.00	1.00	1.00	1.00	1.00	1.00	1.00
Initial Bse:	904	41	93	33	76	435	38	665	539	86	1894	27
Added Vol:	0	0	0	0	0	0	0	0	0	0	0	0
PasserByVol:	0	0	0	0	0	0	0	0	0	0	0	0
Initial Fut:	904	41	93	33	76	435	38	665	539	86	1894	27
User Adj:	1.00	1.00	1.00	1.00	1.00	1.00	1.00	1.00	1.00	1.00	1.00	1.00
PHF Adj:	1.00	1.00	1.00	1.00	1.00	1.00	1.00	1.00	1.00	1.00	1.00	1.00
PHF Volume:	904	41	93	33	76	435	38	665	539	86	1894	27
Reduct Vol:	0	0	0	0	0	0	0	0	0	0	0	0
Reduced Vol:	904	41	93	33	76	435	38	665	539	86	1894	27
PCE Adj:	1.00	1.00	1.00	1.00	1.00	1.00	1.00	1.00	1.00	1.00	1.00	1.00
MLF Adj:	1.00	1.00	1.00	1.00	1.00	1.00	1.00	1.00	1.00	1.00	1.00	1.00
FinalVolume:	904	41	93	33	76	435	38	665	539	86	1894	27
Saturation Flow Module:												
Sat/Lane:	1900	1900	1900	1900	1900	1900	1900	1900	1900	1900	1900	1900
Adjustment:	0.79	0.95	0.78	0.91	0.99	0.78	0.87	1.00	0.78	0.87	1.00	0.78
Lanes:	2.89	0.11	1.00	1.00	1.00	1.00	1.00	3.00	1.00	1.00	2.00	1.00
Final Sat.:	4344	197	1488	1724	1872	1488	1663	5700	1488	1663	3800	1488
Capacity Analysis Module:												
Vol/Sat:	0.21	0.21	0.06	0.02	0.04	0.29	0.02	0.12	0.36	0.05	0.50	0.02
Crit Moves:		****				****	****				****	
Green/Cycle:	0.12	0.12	0.12	0.18	0.18	0.18	0.04	0.58	0.70	0.05	0.59	0.59
Volume/Cap:	1.67	1.67	0.50	0.11	0.23	1.67	0.59	0.20	0.51	0.96	0.84	0.03
Delay/Veh:	387.3	387	75.7	62.5	64.1	391.4	98.4	18.1	12.8	166.1	32.5	15.1
User DelAdj:	1.00	1.00	1.00	1.00	1.00	1.00	1.00	1.00	1.00	1.00	1.00	1.00
AdjDel/Veh:	387.3	387	75.7	62.5	64.1	391.4	98.4	18.1	12.8	166.1	32.5	15.1
LOS by Move:	F	F	E	E	E	F	F	B	B	F	C	B
HCM2kAvgQ:	40	40	6	2	4	50	3	6	15	8	43	1

Note: Queue reported is the number of cars per lane.

Milpitas Boulevard Extension Bridge

Level Of Service Computation Report
2000 HCM Operations (Future Volume Alternative)
Existing AM

Intersection #4: MONTAGUE EXPWY/CAPITOL AVE

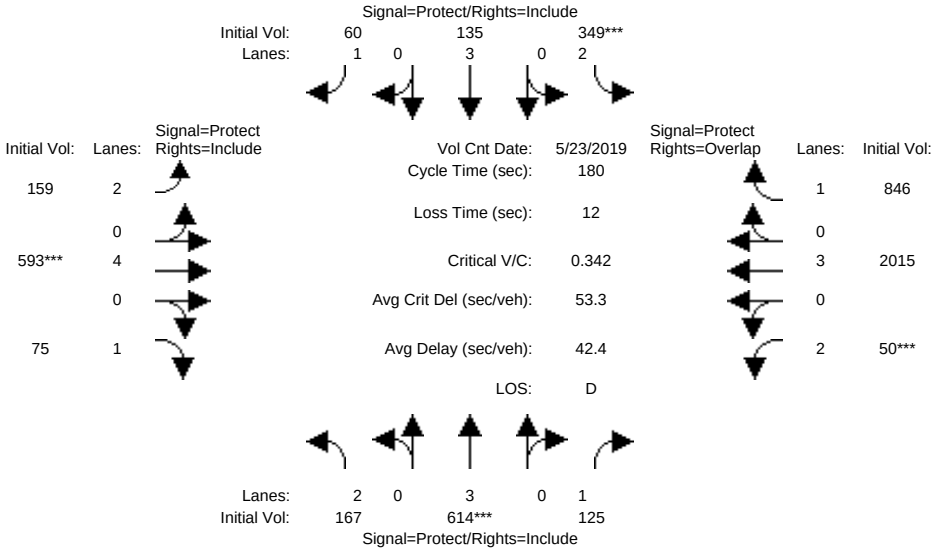

Approach:	North Bound			South Bound			East Bound			West Bound		
Movement:	L -	T -	R	L -	T -	R	L -	T -	R	L -	T -	R
Min. Green:	7	10	10	7	10	10	7	100	10	7	90	10
Y+R:	4.0	4.0	4.0	4.0	4.0	4.0	4.0	4.0	4.0	4.0	4.0	4.0
Volume Module: >> Count Date: 23 May 2019 << 7:00-9:00												
Base Vol:	167	614	125	349	135	60	159	593	75	50	2015	846
Growth Adj:	1.00	1.00	1.00	1.00	1.00	1.00	1.00	1.00	1.00	1.00	1.00	1.00
Initial Bse:	167	614	125	349	135	60	159	593	75	50	2015	846
Added Vol:	0	0	0	0	0	0	0	0	0	0	0	0
PasserByVol:	0	0	0	0	0	0	0	0	0	0	0	0
Initial Fut:	167	614	125	349	135	60	159	593	75	50	2015	846
User Adj:	1.00	1.00	1.00	1.00	1.00	1.00	1.00	1.00	1.00	1.00	0.82	1.00
PHF Adj:	1.00	1.00	1.00	1.00	1.00	1.00	1.00	1.00	1.00	1.00	1.00	1.00
PHF Volume:	167	614	125	349	135	60	159	593	75	50	1652	846
Reduct Vol:	0	0	0	0	0	0	0	0	0	0	0	0
Reduced Vol:	167	614	125	349	135	60	159	593	75	50	1652	846
PCE Adj:	1.00	1.00	1.00	1.00	1.00	1.00	1.00	1.00	1.00	1.00	1.00	1.00
MLF Adj:	1.00	1.00	1.00	1.00	1.00	1.00	1.00	1.00	1.00	1.00	1.00	1.00
FinalVolume:	167	614	125	349	135	60	159	593	75	50	1652	846
Saturation Flow Module:												
Sat/Lane:	1900	1900	1900	1900	1900	1900	1900	1900	1900	1900	1900	1900
Adjustment:	0.79	1.00	0.76	0.79	1.00	0.78	0.79	1.00	0.76	0.79	1.00	0.77
Lanes:	2.00	3.00	1.00	2.00	3.00	1.00	2.00	4.00	1.00	2.00	3.00	1.00
Final Sat.:	2993	5700	1445	2993	5700	1488	2993	7600	1446	2993	5700	1468
Capacity Analysis Module:												
Vol/Sat:	0.06	0.11	0.09	0.12	0.02	0.04	0.05	0.08	0.05	0.02	0.29	0.58
Crit Moves:		****		****				****		****		
Green/Cycle:	0.17	0.16	0.16	0.18	0.17	0.17	0.06	0.56	0.56	0.04	0.54	0.71
Volume/Cap:	0.33	0.66	0.53	0.66	0.14	0.24	0.93	0.14	0.09	0.43	0.54	0.81
Delay/Veh:	66.1	72.5	71.4	72.3	63.7	65.2	133.4	19.3	18.8	87.1	27.3	22.2
User DelAdj:	1.00	1.00	1.00	1.00	1.00	1.00	1.00	1.00	1.00	1.00	1.00	1.00
AdjDel/Veh:	66.1	72.5	71.4	72.3	63.7	65.2	133.4	19.3	18.8	87.1	27.3	22.2
LOS by Move:	E	E	E	E	E	E	F	B	B	F	C	C
HCM2kAvgQ:	5	11	7	12	2	3	8	4	2	2	19	35

Note: Queue reported is the number of cars per lane.

Milpitas Boulevard Extension Bridge

Level Of Service Computation Report
2000 HCM Operations (Future Volume Alternative)
Background AM

Intersection #4: MONTAGUE EXPWY/CAPITOL AVE

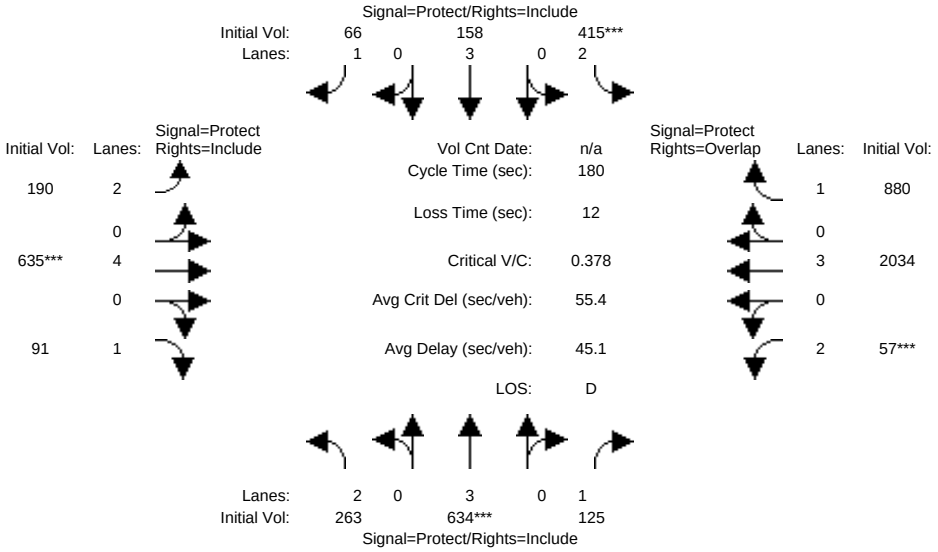

Approach:	North Bound			South Bound			East Bound			West Bound		
Movement:	L -	T -	R	L -	T -	R	L -	T -	R	L -	T -	R
Min. Green:	7	10	10	7	10	10	7	100	10	7	90	10
Y+R:	4.0	4.0	4.0	4.0	4.0	4.0	4.0	4.0	4.0	4.0	4.0	4.0
Volume Module:												
Base Vol:	263	634	125	415	158	66	190	635	91	57	2034	880
Growth Adj:	1.00	1.00	1.00	1.00	1.00	1.00	1.00	1.00	1.00	1.00	1.00	1.00
Initial Bse:	263	634	125	415	158	66	190	635	91	57	2034	880
Added Vol:	0	0	0	0	0	0	0	0	0	0	0	0
PasserByVol:	0	0	0	0	0	0	0	0	0	0	0	0
Initial Fut:	263	634	125	415	158	66	190	635	91	57	2034	880
User Adj:	1.00	1.00	1.00	1.00	1.00	1.00	1.00	1.00	1.00	1.00	1.00	1.00
PHF Adj:	1.00	1.00	1.00	1.00	1.00	1.00	1.00	1.00	1.00	1.00	1.00	1.00
PHF Volume:	263	634	125	415	158	66	190	635	91	57	2034	880
Reduct Vol:	0	0	0	0	0	0	0	0	0	0	0	0
Reduced Vol:	263	634	125	415	158	66	190	635	91	57	2034	880
PCE Adj:	1.00	1.00	1.00	1.00	1.00	1.00	1.00	1.00	1.00	1.00	1.00	1.00
MLF Adj:	1.00	1.00	1.00	1.00	1.00	1.00	1.00	1.00	1.00	1.00	1.00	1.00
FinalVolume:	263	634	125	415	158	66	190	635	91	57	2034	880
Saturation Flow Module:												
Sat/Lane:	1900	1900	1900	1900	1900	1900	1900	1900	1900	1900	1900	1900
Adjustment:	0.79	1.00	0.78	0.79	1.00	0.78	0.79	1.00	0.78	0.79	1.00	0.78
Lanes:	2.00	3.00	1.00	2.00	3.00	1.00	2.00	4.00	1.00	2.00	3.00	1.00
Final Sat.:	2993	5700	1488	2993	5700	1488	2993	7600	1488	2993	5700	1488
Capacity Analysis Module:												
Vol/Sat:	0.09	0.11	0.08	0.14	0.03	0.04	0.06	0.08	0.06	0.02	0.36	0.59
Crit Moves:		****		****				****		****		
Green/Cycle:	0.21	0.15	0.15	0.19	0.13	0.13	0.07	0.56	0.56	0.04	0.53	0.72
Volume/Cap:	0.42	0.74	0.56	0.74	0.21	0.34	0.95	0.15	0.11	0.49	0.68	0.83
Delay/Veh:	62.4	76.4	73.9	74.0	70.0	72.1	132.3	19.4	19.0	88.0	31.9	23.3
User DelAdj:	1.00	1.00	1.00	1.00	1.00	1.00	1.00	1.00	1.00	1.00	1.00	1.00
AdjDel/Veh:	62.4	76.4	73.9	74.0	70.0	72.1	132.3	19.4	19.0	88.0	31.9	23.3
LOS by Move:	E	E	E	E	E	E	F	B	B	F	C	C
HCM2kAvgQ:	8	12	7	14	3	4	9	4	2	2	27	37

Note: Queue reported is the number of cars per lane.

Milpitas Boulevard Extension Bridge

Level Of Service Computation Report
2000 HCM Operations (Future Volume Alternative)
Background + Project AM

Intersection #4: MONTAGUE EXPWY/CAPITOL AVE

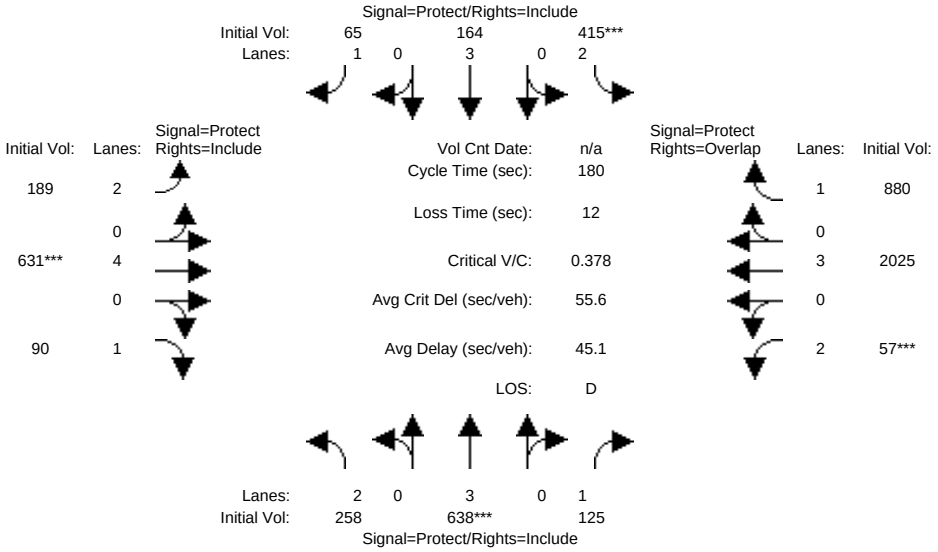

Approach:	North Bound			South Bound			East Bound			West Bound		
Movement:	L -	T -	R	L -	T -	R	L -	T -	R	L -	T -	R
Min. Green:	7	10	10	7	10	10	7	100	10	7	90	10
Y+R:	4.0	4.0	4.0	4.0	4.0	4.0	4.0	4.0	4.0	4.0	4.0	4.0
Volume Module:												
Base Vol:	258	638	125	415	164	65	189	631	90	57	2025	880
Growth Adj:	1.00	1.00	1.00	1.00	1.00	1.00	1.00	1.00	1.00	1.00	1.00	1.00
Initial Bse:	258	638	125	415	164	65	189	631	90	57	2025	880
Added Vol:	0	0	0	0	0	0	0	0	0	0	0	0
PasserByVol:	0	0	0	0	0	0	0	0	0	0	0	0
Initial Fut:	258	638	125	415	164	65	189	631	90	57	2025	880
User Adj:	1.00	1.00	1.00	1.00	1.00	1.00	1.00	1.00	1.00	1.00	1.00	1.00
PHF Adj:	1.00	1.00	1.00	1.00	1.00	1.00	1.00	1.00	1.00	1.00	1.00	1.00
PHF Volume:	258	638	125	415	164	65	189	631	90	57	2025	880
Reduct Vol:	0	0	0	0	0	0	0	0	0	0	0	0
Reduced Vol:	258	638	125	415	164	65	189	631	90	57	2025	880
PCE Adj:	1.00	1.00	1.00	1.00	1.00	1.00	1.00	1.00	1.00	1.00	1.00	1.00
MLF Adj:	1.00	1.00	1.00	1.00	1.00	1.00	1.00	1.00	1.00	1.00	1.00	1.00
FinalVolume:	258	638	125	415	164	65	189	631	90	57	2025	880
Saturation Flow Module:												
Sat/Lane:	1900	1900	1900	1900	1900	1900	1900	1900	1900	1900	1900	1900
Adjustment:	0.79	1.00	0.78	0.79	1.00	0.78	0.79	1.00	0.78	0.79	1.00	0.78
Lanes:	2.00	3.00	1.00	2.00	3.00	1.00	2.00	4.00	1.00	2.00	3.00	1.00
Final Sat.:	2993	5700	1488	2993	5700	1488	2993	7600	1488	2993	5700	1488
Capacity Analysis Module:												
Vol/Sat:	0.09	0.11	0.08	0.14	0.03	0.04	0.06	0.08	0.06	0.02	0.36	0.59
Crit Moves:		****		****				****		****		
Green/Cycle:	0.21	0.15	0.15	0.19	0.13	0.13	0.07	0.56	0.56	0.04	0.53	0.72
Volume/Cap:	0.42	0.74	0.56	0.74	0.22	0.33	0.95	0.15	0.11	0.49	0.67	0.83
Delay/Veh:	62.5	76.4	73.8	74.2	69.8	71.8	132.4	19.4	19.0	88.0	31.7	23.3
User DelAdj:	1.00	1.00	1.00	1.00	1.00	1.00	1.00	1.00	1.00	1.00	1.00	1.00
AdjDel/Veh:	62.5	76.4	73.8	74.2	69.8	71.8	132.4	19.4	19.0	88.0	31.7	23.3
LOS by Move:	E	E	E	E	E	E	F	B	B	F	C	C
HCM2kAvgQ:	7	12	7	14	3	4	9	4	2	2	27	37

Note: Queue reported is the number of cars per lane.

Milpitas Boulevard Extension Bridge

Level Of Service Computation Report
2000 HCM Unsignalized (Future Volume Alternative)
Existing AM

Intersection #5: Montague Expressway/Sango Ct

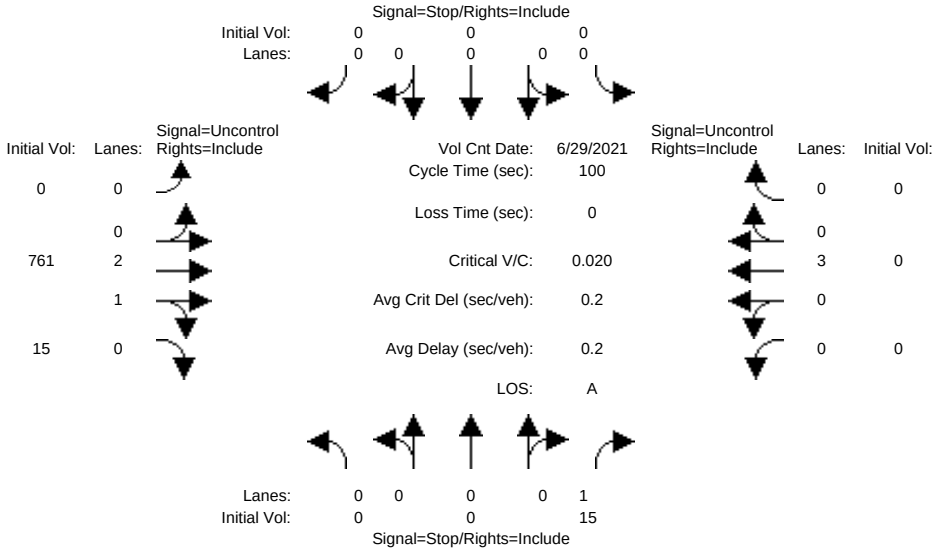


```
Street Name:              Sango Ct                    Montague Expressway
Approach:      North Bound      South Bound       East Bound       West Bound
Movement:     L  -  T  -  R    L  -  T  -  R    L  -  T  -  R    L  -  T  -  R
------------|---------------||---------------||---------------||---------------|
Volume Module: >> Count Date: 29 Jun 2021 <<
Base Vol:       0    0    15     0    0     0     0  761    15     0    0     0
Growth Adj:  1.00 1.00  1.00  1.00 1.00  1.00  1.00 1.00  1.00  1.00 1.00  1.00
Initial Bse:    0    0    15     0    0     0     0  761    15     0    0     0
Added Vol:      0    0     0     0    0     0     0    0     0     0    0     0
PasserByVol:    0    0     0     0    0     0     0    0     0     0    0     0
Initial Fut:    0    0    15     0    0     0     0  761    15     0    0     0
User Adj:    1.00 1.00  1.00  1.00 1.00  1.00  1.00 1.00  1.00  1.00 1.00  1.00
PHF Adj:     1.00 1.00  1.00  1.00 1.00  1.00  1.00 1.00  1.00  1.00 1.00  1.00
PHF Volume:     0    0    15     0    0     0     0  761    15     0    0     0
Reduct Vol:     0    0     0     0    0     0     0    0     0     0    0     0
FinalVolume:    0    0    15     0    0     0     0  761    15     0    0     0
------------|---------------||---------------||---------------||---------------|
Critical Gap Module:
Critical Gp:xxxxx xxxx   6.9 xxxxx xxxx xxxxx xxxxx xxxx xxxxx xxxxx xxxx xxxxx
FollowUpTim:xxxxx xxxx   3.3 xxxxx xxxx xxxxx xxxxx xxxx xxxxx xxxxx xxxx xxxxx
------------|---------------||---------------||---------------||---------------|
Capacity Module:
Cnflict Vol: xxxx xxxx   261  xxxx xxxx xxxxx  xxxx xxxx xxxxx  xxxx xxxx xxxxx
Potent Cap.: xxxx xxxx   744  xxxx xxxx xxxxx  xxxx xxxx xxxxx  xxxx xxxx xxxxx
Move Cap.:   xxxx xxxx   744  xxxx xxxx xxxxx  xxxx xxxx xxxxx  xxxx xxxx xxxxx
Volume/Cap:  xxxx xxxx  0.02  xxxx xxxx  xxxx  xxxx xxxx  xxxx  xxxx xxxx  xxxx
------------|---------------||---------------||---------------||---------------|
Level Of Service Module:
2Way95thQ:   xxxx xxxx   0.1  xxxx xxxx xxxxx  xxxx xxxx xxxxx  xxxx xxxx xxxxx
Control Del:xxxxx xxxx   9.9 xxxxx xxxx xxxxx xxxxx xxxx xxxxx xxxxx xxxx xxxxx
LOS by Move:    *    *     A     *    *     *     *    *     *     *    *     *
Movement:     LT - LTR - RT    LT - LTR - RT    LT - LTR - RT    LT - LTR - RT
Shared Cap.: xxxx xxxx xxxxx  xxxx xxxx xxxxx  xxxx xxxx xxxxx  xxxx xxxx xxxxx
SharedQueue:xxxxx xxxx xxxxx xxxxx xxxx xxxxx xxxxx xxxx xxxxx xxxxx xxxx xxxxx
Shrd ConDel:xxxxx xxxx xxxxx xxxxx xxxx xxxxx xxxxx xxxx xxxxx xxxxx xxxx xxxxx
Shared LOS:     *    *     *     *    *     *     *    *     *     *    *     *
ApproachDel:       9.9           xxxxxx           xxxxxx           xxxxxx
ApproachLOS:         A                *                *                *
Note: Queue reported is the number of cars per lane.
                    Peak Hour Delay Signal Warrant Report
*******************************************************************************
Intersection #5 Montague Expressway/Sango Ct
*******************************************************************************
Future Volume Alternative: Peak Hour Warrant NOT Met
```

```
------------|---------------||---------------||---------------||---------------|
Approach:      North Bound      South Bound       East Bound       West Bound
Movement:     L  -  T  -  R    L  -  T  -  R    L  -  T  -  R    L  -  T  -  R
------------|---------------||---------------||---------------||---------------|
Control:        Stop Sign        Stop Sign       Uncontrolled     Uncontrolled
Lanes:        0  0  0  0  1    0  0  0  0  0    0  0  2  1  0    0  0  3  0  0
Initial Vol:    0    0    15     0    0     0     0  761    15     0    0     0
ApproachDel:       9.9           xxxxxx           xxxxxx           xxxxxx
------------|---------------||---------------||---------------||---------------|
Approach[northbound][lanes=1][control=Stop Sign]
Signal Warrant Rule #1: [vehicle-hours=0.0]
   FAIL - Vehicle-hours less than 4 for one lane approach.
Signal Warrant Rule #2: [approach volume=15]
   FAIL - Approach volume less than 100 for one lane approach.
Signal Warrant Rule #3: [approach count=2][total volume=791]
   SUCCEED - Total volume greater than or equal to 650 for intersection
             with less than four approaches.
--------------------------------------------------------------------------------
SIGNAL WARRANT DISCLAIMER
This peak hour signal warrant analysis should be considered solely as an
"indicator" of the likelihood of an unsignalized intersection warranting
a traffic signal in the future.  Intersections that exceed this warrant
are probably more likely to meet one or more of the other volume based
signal warrant (such as the 4-hour or 8-hour warrants).

The peak hour warrant analysis in this report is not intended to replace
a rigorous and complete traffic signal warrant analysis by the responsible
jurisdiction.  Consideration of the other signal warrants, which is beyond
the scope of this software, may yield different results.
                Peak Hour Volume Signal Warrant Report [Urban]
********************************************************************************
Intersection #5 Montague Expressway/Sango Ct
********************************************************************************
Future Volume Alternative: Peak Hour Warrant NOT Met
------------|---------------||---------------||---------------||---------------|
Approach:      North Bound      South Bound       East Bound       West Bound
Movement:     L  -  T  -  R    L  -  T  -  R    L  -  T  -  R    L  -  T  -  R
------------|---------------||---------------||---------------||---------------|
Control:        Stop Sign        Stop Sign       Uncontrolled     Uncontrolled
Lanes:        0  0  0  0  1    0  0  0  0  0    0  0  2  1  0    0  0  3  0  0
Initial Vol:    0    0    15     0    0     0     0  761    15     0    0     0
------------|---------------||---------------||---------------||---------------|
Major Street Volume:             776
Minor Approach Volume:           15
Minor Approach Volume Threshold: 372
--------------------------------------------------------------------------------
SIGNAL WARRANT DISCLAIMER
This peak hour signal warrant analysis should be considered solely as an
"indicator" of the likelihood of an unsignalized intersection warranting
a traffic signal in the future.  Intersections that exceed this warrant
are probably more likely to meet one or more of the other volume based
signal warrant (such as the 4-hour or 8-hour warrants).

The peak hour warrant analysis in this report is not intended to replace
a rigorous and complete traffic signal warrant analysis by the responsible
jurisdiction.  Consideration of the other signal warrants, which is beyond
the scope of this software, may yield different results.
```

Milpitas Boulevard Extension Bridge

Level Of Service Computation Report
2000 HCM Unsignalized (Future Volume Alternative)
Background AM

Intersection #5: Montague Expressway/Sango Ct

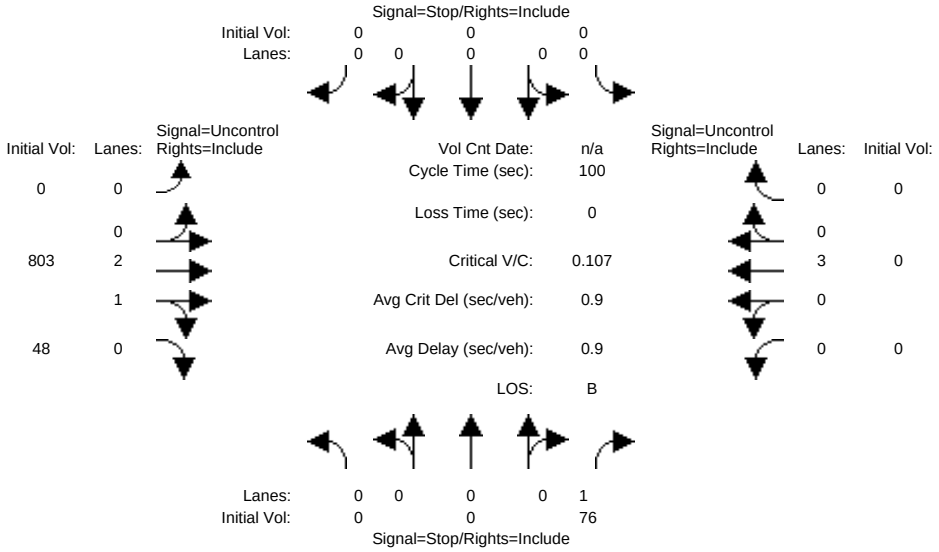


```
Street Name:              Sango Ct                    Montague Expressway
Approach:      North Bound      South Bound       East Bound       West Bound
Movement:     L  -  T  -  R    L  -  T  -  R    L  -  T  -  R    L  -  T  -  R
------------|---------------||---------------||---------------||---------------|
Volume Module:
Base Vol:       0    0    76     0    0     0     0  803    48     0    0     0
Growth Adj:  1.00 1.00  1.00  1.00 1.00  1.00  1.00 1.00  1.00  1.00 1.00  1.00
Initial Bse:    0    0    76     0    0     0     0  803    48     0    0     0
Added Vol:      0    0     0     0    0     0     0    0     0     0    0     0
PasserByVol:    0    0     0     0    0     0     0    0     0     0    0     0
Initial Fut:    0    0    76     0    0     0     0  803    48     0    0     0
User Adj:    1.00 1.00  1.00  1.00 1.00  1.00  1.00 1.00  1.00  1.00 1.00  1.00
PHF Adj:     1.00 1.00  1.00  1.00 1.00  1.00  1.00 1.00  1.00  1.00 1.00  1.00
PHF Volume:     0    0    76     0    0     0     0  803    48     0    0     0
Reduct Vol:     0    0     0     0    0     0     0    0     0     0    0     0
FinalVolume:    0    0    76     0    0     0     0  803    48     0    0     0
------------|---------------||---------------||---------------||---------------|
Critical Gap Module:
Critical Gp:xxxxx xxxx   6.9 xxxxx xxxx xxxxx xxxxx xxxx xxxxx xxxxx xxxx xxxxx
FollowUpTim:xxxxx xxxx   3.3 xxxxx xxxx xxxxx xxxxx xxxx xxxxx xxxxx xxxx xxxxx
------------|---------------||---------------||---------------||---------------|
Capacity Module:
Cnflict Vol: xxxx xxxx   292  xxxx xxxx xxxxx  xxxx xxxx xxxxx  xxxx xxxx xxxxx
Potent Cap.: xxxx xxxx   711  xxxx xxxx xxxxx  xxxx xxxx xxxxx  xxxx xxxx xxxxx
Move Cap.:   xxxx xxxx   711  xxxx xxxx xxxxx  xxxx xxxx xxxxx  xxxx xxxx xxxxx
Volume/Cap:  xxxx xxxx  0.11  xxxx xxxx  xxxx  xxxx xxxx  xxxx  xxxx xxxx  xxxx
------------|---------------||---------------||---------------||---------------|
Level Of Service Module:
2Way95thQ:   xxxx xxxx   0.4  xxxx xxxx xxxxx  xxxx xxxx xxxxx  xxxx xxxx xxxxx
Control Del:xxxxx xxxx  10.7 xxxxx xxxx xxxxx xxxxx xxxx xxxxx xxxxx xxxx xxxxx
LOS by Move:    *    *     B     *    *     *     *    *     *     *    *     *
Movement:     LT - LTR - RT    LT - LTR - RT    LT - LTR - RT    LT - LTR - RT
Shared Cap.: xxxx xxxx xxxxx  xxxx xxxx xxxxx  xxxx xxxx xxxxx  xxxx xxxx xxxxx
SharedQueue:xxxxx xxxx xxxxx xxxxx xxxx xxxxx xxxxx xxxx xxxxx xxxxx xxxx xxxxx
Shrd ConDel:xxxxx xxxx xxxxx xxxxx xxxx xxxxx xxxxx xxxx xxxxx xxxxx xxxx xxxxx
Shared LOS:     *    *     *     *    *     *     *    *     *     *    *     *
ApproachDel:      10.7           xxxxxx           xxxxxx           xxxxxx
ApproachLOS:         B                *                *                *
Note: Queue reported is the number of cars per lane.
                     Peak Hour Delay Signal Warrant Report
*******************************************************************************
Intersection #5 Montague Expressway/Sango Ct
*******************************************************************************
Future Volume Alternative: Peak Hour Warrant NOT Met
```

```
------------|---------------||---------------||---------------||---------------|
Approach:      North Bound      South Bound       East Bound       West Bound
Movement:     L  -  T  -  R    L  -  T  -  R    L  -  T  -  R    L  -  T  -  R
------------|---------------||---------------||---------------||---------------|
Control:        Stop Sign        Stop Sign       Uncontrolled     Uncontrolled
Lanes:        0  0  0  0  1    0  0  0  0  0    0  0  2  1  0    0  0  3  0  0
Initial Vol:    0    0    76     0    0     0     0  803    48     0    0     0
ApproachDel:      10.7           xxxxxx           xxxxxx           xxxxxx
------------|---------------||---------------||---------------||---------------|
Approach[northbound][lanes=1][control=Stop Sign]
Signal Warrant Rule #1: [vehicle-hours=0.2]
   FAIL - Vehicle-hours less than 4 for one lane approach.
Signal Warrant Rule #2: [approach volume=76]
   FAIL - Approach volume less than 100 for one lane approach.
Signal Warrant Rule #3: [approach count=2][total volume=927]
   SUCCEED - Total volume greater than or equal to 650 for intersection
             with less than four approaches.
--------------------------------------------------------------------------------
SIGNAL WARRANT DISCLAIMER
This peak hour signal warrant analysis should be considered solely as an
"indicator" of the likelihood of an unsignalized intersection warranting
a traffic signal in the future.  Intersections that exceed this warrant
are probably more likely to meet one or more of the other volume based
signal warrant (such as the 4-hour or 8-hour warrants).

The peak hour warrant analysis in this report is not intended to replace
a rigorous and complete traffic signal warrant analysis by the responsible
jurisdiction.  Consideration of the other signal warrants, which is beyond
the scope of this software, may yield different results.
                Peak Hour Volume Signal Warrant Report [Urban]
********************************************************************************
Intersection #5 Montague Expressway/Sango Ct
********************************************************************************
Future Volume Alternative: Peak Hour Warrant NOT Met
------------|---------------||---------------||---------------||---------------|
Approach:      North Bound      South Bound       East Bound       West Bound
Movement:     L  -  T  -  R    L  -  T  -  R    L  -  T  -  R    L  -  T  -  R
------------|---------------||---------------||---------------||---------------|
Control:        Stop Sign        Stop Sign       Uncontrolled     Uncontrolled
Lanes:        0  0  0  0  1    0  0  0  0  0    0  0  2  1  0    0  0  3  0  0
Initial Vol:    0    0    76     0    0     0     0  803    48     0    0     0
------------|---------------||---------------||---------------||---------------|
Major Street Volume:             851
Minor Approach Volume:           76
Minor Approach Volume Threshold: 340
--------------------------------------------------------------------------------
SIGNAL WARRANT DISCLAIMER
This peak hour signal warrant analysis should be considered solely as an
"indicator" of the likelihood of an unsignalized intersection warranting
a traffic signal in the future.  Intersections that exceed this warrant
are probably more likely to meet one or more of the other volume based
signal warrant (such as the 4-hour or 8-hour warrants).

The peak hour warrant analysis in this report is not intended to replace
a rigorous and complete traffic signal warrant analysis by the responsible
jurisdiction.  Consideration of the other signal warrants, which is beyond
the scope of this software, may yield different results.
```

Milpitas Boulevard Extension Bridge

Level Of Service Computation Report
2000 HCM Unsignalized (Future Volume Alternative)
Background + Project AM

Intersection #5: Montague Expressway/Sango Ct

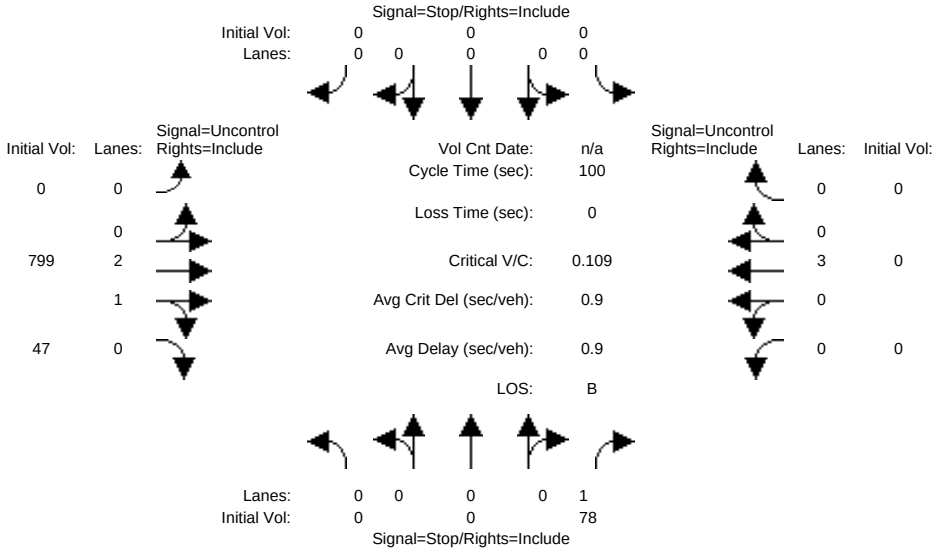


```
Street Name:              Sango Ct                     Montague Expressway
Approach:       North Bound      South Bound       East Bound       West Bound
Movement:      L  -  T  -  R    L  -  T  -  R    L  -  T  -  R    L  -  T  -  R
------------|---------------||---------------||---------------||---------------|
Volume Module:
Base Vol:       0    0    78     0    0     0     0  799    47     0    0     0
Growth Adj:  1.00 1.00  1.00  1.00 1.00  1.00  1.00 1.00  1.00  1.00 1.00  1.00
Initial Bse:    0    0    78     0    0     0     0  799    47     0    0     0
Added Vol:      0    0     0     0    0     0     0    0     0     0    0     0
PasserByVol:    0    0     0     0    0     0     0    0     0     0    0     0
Initial Fut:    0    0    78     0    0     0     0  799    47     0    0     0
User Adj:    1.00 1.00  1.00  1.00 1.00  1.00  1.00 1.00  1.00  1.00 1.00  1.00
PHF Adj:     1.00 1.00  1.00  1.00 1.00  1.00  1.00 1.00  1.00  1.00 1.00  1.00
PHF Volume:     0    0    78     0    0     0     0  799    47     0    0     0
Reduct Vol:     0    0     0     0    0     0     0    0     0     0    0     0
FinalVolume:    0    0    78     0    0     0     0  799    47     0    0     0
------------|---------------||---------------||---------------||---------------|
Critical Gap Module:
Critical Gp:xxxxx xxxx   6.9 xxxxx xxxx xxxxx xxxxx xxxx xxxxx xxxxx xxxx xxxxx
FollowUpTim:xxxxx xxxx   3.3 xxxxx xxxx xxxxx xxxxx xxxx xxxxx xxxxx xxxx xxxxx
------------|---------------||---------------||---------------||---------------|
Capacity Module:
Cnflict Vol: xxxx xxxx   290  xxxx xxxx xxxxx  xxxx xxxx xxxxx  xxxx xxxx xxxxx
Potent Cap.: xxxx xxxx   713  xxxx xxxx xxxxx  xxxx xxxx xxxxx  xxxx xxxx xxxxx
Move Cap.:   xxxx xxxx   713  xxxx xxxx xxxxx  xxxx xxxx xxxxx  xxxx xxxx xxxxx
Volume/Cap:  xxxx xxxx  0.11  xxxx xxxx  xxxx  xxxx xxxx  xxxx  xxxx xxxx  xxxx
------------|---------------||---------------||---------------||---------------|
Level Of Service Module:
2Way95thQ:   xxxx xxxx   0.4  xxxx xxxx xxxxx  xxxx xxxx xxxxx  xxxx xxxx xxxxx
Control Del:xxxxx xxxx  10.7 xxxxx xxxx xxxxx xxxxx xxxx xxxxx xxxxx xxxx xxxxx
LOS by Move:    *    *     B     *    *     *     *    *     *     *    *     *
Movement:     LT - LTR - RT    LT - LTR - RT    LT - LTR - RT    LT - LTR - RT
Shared Cap.: xxxx xxxx xxxxx  xxxx xxxx xxxxx  xxxx xxxx xxxxx  xxxx xxxx xxxxx
SharedQueue:xxxxx xxxx xxxxx xxxxx xxxx xxxxx xxxxx xxxx xxxxx xxxxx xxxx xxxxx
Shrd ConDel:xxxxx xxxx xxxxx xxxxx xxxx xxxxx xxxxx xxxx xxxxx xxxxx xxxx xxxxx
Shared LOS:     *    *     *     *    *     *     *    *     *     *    *     *
ApproachDel:      10.7           xxxxxx           xxxxxx           xxxxxx
ApproachLOS:         B                *                *                *
Note: Queue reported is the number of cars per lane.
                     Peak Hour Delay Signal Warrant Report
*******************************************************************************
Intersection #5 Montague Expressway/Sango Ct
*******************************************************************************
Future Volume Alternative: Peak Hour Warrant NOT Met
```

```
------------|---------------||---------------||---------------||---------------|
Approach:      North Bound      South Bound       East Bound       West Bound
Movement:     L  -  T  -  R    L  -  T  -  R    L  -  T  -  R    L  -  T  -  R
------------|---------------||---------------||---------------||---------------|
Control:        Stop Sign        Stop Sign       Uncontrolled     Uncontrolled
Lanes:        0  0  0  0  1    0  0  0  0  0    0  0  2  1  0    0  0  3  0  0
Initial Vol:    0    0    78     0    0     0     0  799    47     0    0     0
ApproachDel:      10.7           xxxxxx           xxxxxx           xxxxxx
------------|---------------||---------------||---------------||---------------|
Approach[northbound][lanes=1][control=Stop Sign]
Signal Warrant Rule #1: [vehicle-hours=0.2]
   FAIL - Vehicle-hours less than 4 for one lane approach.
Signal Warrant Rule #2: [approach volume=78]
   FAIL - Approach volume less than 100 for one lane approach.
Signal Warrant Rule #3: [approach count=2][total volume=924]
   SUCCEED - Total volume greater than or equal to 650 for intersection
             with less than four approaches.
--------------------------------------------------------------------------------
SIGNAL WARRANT DISCLAIMER
This peak hour signal warrant analysis should be considered solely as an
"indicator" of the likelihood of an unsignalized intersection warranting
a traffic signal in the future.  Intersections that exceed this warrant
are probably more likely to meet one or more of the other volume based
signal warrant (such as the 4-hour or 8-hour warrants).

The peak hour warrant analysis in this report is not intended to replace
a rigorous and complete traffic signal warrant analysis by the responsible
jurisdiction.  Consideration of the other signal warrants, which is beyond
the scope of this software, may yield different results.
                Peak Hour Volume Signal Warrant Report [Urban]
********************************************************************************
Intersection #5 Montague Expressway/Sango Ct
********************************************************************************
Future Volume Alternative: Peak Hour Warrant NOT Met
------------|---------------||---------------||---------------||---------------|
Approach:      North Bound      South Bound       East Bound       West Bound
Movement:     L  -  T  -  R    L  -  T  -  R    L  -  T  -  R    L  -  T  -  R
------------|---------------||---------------||---------------||---------------|
Control:        Stop Sign        Stop Sign       Uncontrolled     Uncontrolled
Lanes:        0  0  0  0  1    0  0  0  0  0    0  0  2  1  0    0  0  3  0  0
Initial Vol:    0    0    78     0    0     0     0  799    47     0    0     0
------------|---------------||---------------||---------------||---------------|
Major Street Volume:             846
Minor Approach Volume:           78
Minor Approach Volume Threshold: 342
--------------------------------------------------------------------------------
SIGNAL WARRANT DISCLAIMER
This peak hour signal warrant analysis should be considered solely as an
"indicator" of the likelihood of an unsignalized intersection warranting
a traffic signal in the future.  Intersections that exceed this warrant
are probably more likely to meet one or more of the other volume based
signal warrant (such as the 4-hour or 8-hour warrants).

The peak hour warrant analysis in this report is not intended to replace
a rigorous and complete traffic signal warrant analysis by the responsible
jurisdiction.  Consideration of the other signal warrants, which is beyond
the scope of this software, may yield different results.
```

Milpitas Boulevard Extension Bridge

Level Of Service Computation Report
2000 HCM Operations (Future Volume Alternative)
Cumulative AM

Intersection #1: CAPITOL AVE/MILPITAS BLVD

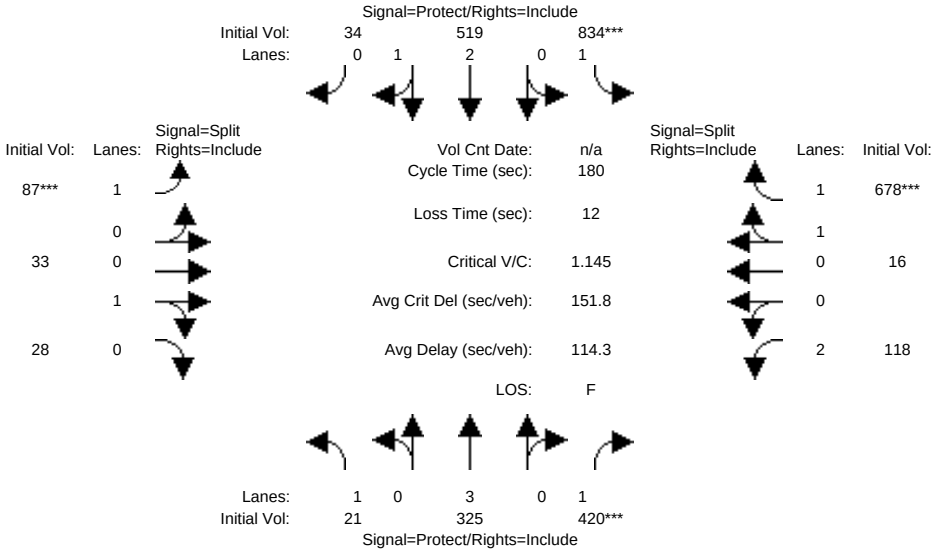

Approach:	North Bound			South Bound			East Bound			West Bound		
Movement:	L -	T -	R	L -	T -	R	L -	T -	R	L -	T -	R
Min. Green:	7	10	10	7	10	10	10	10	10	10	10	10
Y+R:	4.0	4.0	4.0	4.0	4.0	4.0	4.0	4.0	4.0	4.0	4.0	4.0
Volume Module:												
Base Vol:	21	325	420	834	519	34	87	33	28	118	16	678
Growth Adj:	1.00	1.00	1.00	1.00	1.00	1.00	1.00	1.00	1.00	1.00	1.00	1.00
Initial Bse:	21	325	420	834	519	34	87	33	28	118	16	678
Added Vol:	0	0	0	0	0	0	0	0	0	0	0	0
PasserByVol:	0	0	0	0	0	0	0	0	0	0	0	0
Initial Fut:	21	325	420	834	519	34	87	33	28	118	16	678
User Adj:	1.00	1.00	1.00	1.00	1.00	1.00	1.00	1.00	1.00	1.00	1.00	1.00
PHF Adj:	1.00	1.00	1.00	1.00	1.00	1.00	1.00	1.00	1.00	1.00	1.00	1.00
PHF Volume:	21	325	420	834	519	34	87	33	28	118	16	678
Reduct Vol:	0	0	0	0	0	0	0	0	0	0	0	0
Reduced Vol:	21	325	420	834	519	34	87	33	28	118	16	678
PCE Adj:	1.00	1.00	1.00	1.00	1.00	1.00	1.00	1.00	1.00	1.00	1.00	1.00
MLF Adj:	1.00	1.00	1.00	1.00	1.00	1.00	1.00	1.00	1.00	1.00	1.00	1.00
FinalVolume:	21	325	420	834	519	34	87	33	28	118	16	678
Saturation Flow Module:												
Sat/Lane:	1900	1900	1900	1900	1900	1900	1900	1900	1900	1900	1900	1900
Adjustment:	0.87	1.00	0.78	0.87	0.99	0.91	0.87	0.93	0.86	0.79	0.85	0.79
Lanes:	1.00	3.00	1.00	1.00	2.80	0.20	1.00	0.52	0.48	2.00	0.04	1.96
Final Sat.:	1663	5700	1488	1663	5274	345	1663	921	781	2993	69	2922
Capacity Analysis Module:												
Vol/Sat:	0.01	0.06	0.28	0.50	0.10	0.10	0.05	0.04	0.04	0.04	0.23	0.23
Crit Moves:			****	****			****					****
Green/Cycle:	0.19	0.24	0.24	0.43	0.49	0.49	0.06	0.06	0.06	0.20	0.20	0.20
Volume/Cap:	0.07	0.23	1.16	1.16	0.20	0.20	0.94	0.65	0.65	0.20	1.16	1.16
Delay/Veh:	59.6	54.6	165.5	137.0	26.5	26.5	159.2	97.6	97.6	60.1	161	160.5
User DelAdj:	1.00	1.00	1.00	1.00	1.00	1.00	1.00	1.00	1.00	1.00	1.00	1.00
AdjDel/Veh:	59.6	54.6	165.5	137.0	26.5	26.5	159.2	97.6	97.6	60.1	161	160.5
LOS by Move:	E	D	F	F	C	C	F	F	F	E	F	F
HCM2kAvgQ:	1	5	35	66	6	6	8	4	4	3	30	30

Note: Queue reported is the number of cars per lane.

Milpitas Boulevard Extension Bridge

Level Of Service Computation Report
2000 HCM Operations (Future Volume Alternative)
Cumulative + Project AM

Intersection #1: CAPITOL AVE/MILPITAS BLVD

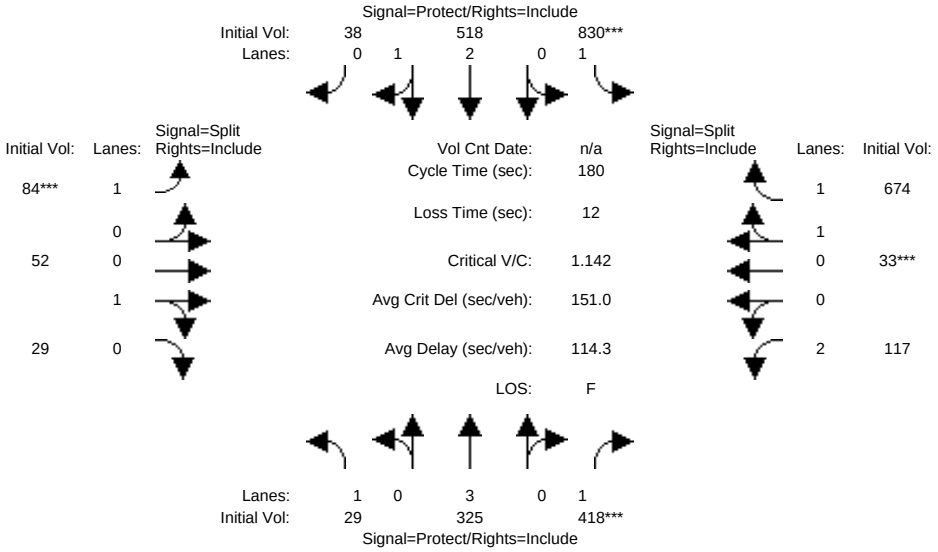

Approach:	North Bound			South Bound			East Bound			West Bound		
Movement:	L -	T -	R	L -	T -	R	L -	T -	R	L -	T -	R
Min. Green:	7	10	10	7	10	10	10	10	10	10	10	10
Y+R:	4.0	4.0	4.0	4.0	4.0	4.0	4.0	4.0	4.0	4.0	4.0	4.0
Volume Module:												
Base Vol:	29	325	418	830	518	38	84	52	29	117	33	674
Growth Adj:	1.00	1.00	1.00	1.00	1.00	1.00	1.00	1.00	1.00	1.00	1.00	1.00
Initial Bse:	29	325	418	830	518	38	84	52	29	117	33	674
Added Vol:	0	0	0	0	0	0	0	0	0	0	0	0
PasserByVol:	0	0	0	0	0	0	0	0	0	0	0	0
Initial Fut:	29	325	418	830	518	38	84	52	29	117	33	674
User Adj:	1.00	1.00	1.00	1.00	1.00	1.00	1.00	1.00	1.00	1.00	1.00	1.00
PHF Adj:	1.00	1.00	1.00	1.00	1.00	1.00	1.00	1.00	1.00	1.00	1.00	1.00
PHF Volume:	29	325	418	830	518	38	84	52	29	117	33	674
Reduct Vol:	0	0	0	0	0	0	0	0	0	0	0	0
Reduced Vol:	29	325	418	830	518	38	84	52	29	117	33	674
PCE Adj:	1.00	1.00	1.00	1.00	1.00	1.00	1.00	1.00	1.00	1.00	1.00	1.00
MLF Adj:	1.00	1.00	1.00	1.00	1.00	1.00	1.00	1.00	1.00	1.00	1.00	1.00
FinalVolume:	29	325	418	830	518	38	84	52	29	117	33	674
Saturation Flow Module:												
Sat/Lane:	1900	1900	1900	1900	1900	1900	1900	1900	1900	1900	1900	1900
Adjustment:	0.87	1.00	0.78	0.87	0.99	0.91	0.87	0.95	0.87	0.79	0.86	0.79
Lanes:	1.00	3.00	1.00	1.00	2.78	0.22	1.00	0.62	0.38	2.00	0.09	1.91
Final Sat.:	1663	5700	1488	1663	5227	383	1663	1120	624	2993	141	2870
Capacity Analysis Module:												
Vol/Sat:	0.02	0.06	0.28	0.50	0.10	0.10	0.05	0.05	0.05	0.04	0.23	0.23
Crit Moves:			****	****			****				****	
Green/Cycle:	0.19	0.24	0.24	0.43	0.48	0.48	0.06	0.06	0.06	0.20	0.20	0.20
Volume/Cap:	0.09	0.23	1.16	1.16	0.20	0.20	0.91	0.84	0.84	0.19	1.16	1.16
Delay/Veh:	60.2	54.8	165.2	136.8	26.6	26.6	149.2	128	128.0	59.6	160	159.6
User DelAdj:	1.00	1.00	1.00	1.00	1.00	1.00	1.00	1.00	1.00	1.00	1.00	1.00
AdjDel/Veh:	60.2	54.8	165.2	136.8	26.6	26.6	149.2	128	128.0	59.6	160	159.6
LOS by Move:	E	D	F	F	C	C	F	F	F	E	F	F
HCM2kAvgQ:	1	5	35	66	6	6	7	6	6	3	30	30

Note: Queue reported is the number of cars per lane.

Milpitas Boulevard Extension Bridge

Level Of Service Computation Report
2000 HCM Operations (Future Volume Alternative)
Cumulative AM

Intersection #2: LUNDY/TRADE ZONE

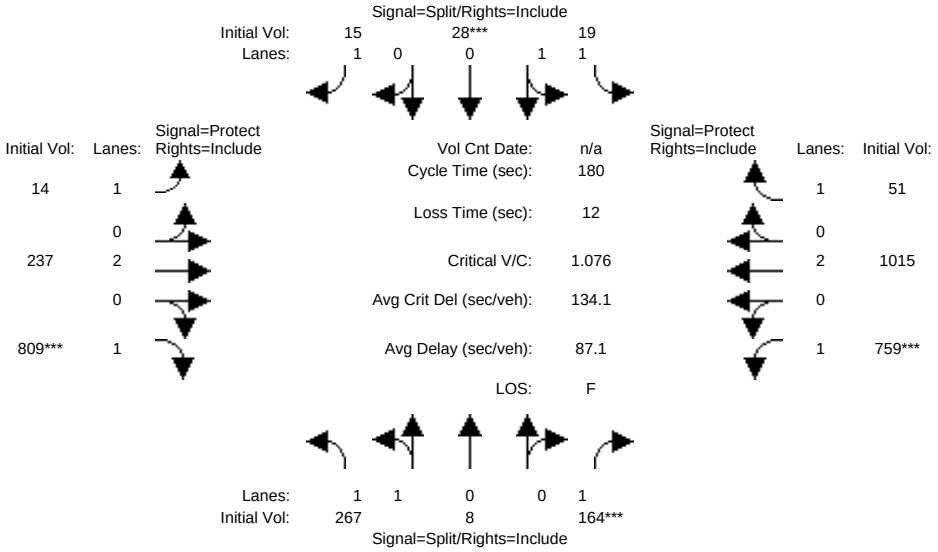

Approach:	North Bound			South Bound			East Bound			West Bound		
Movement:	L -	T -	R	L -	T -	R	L -	T -	R	L -	T -	R
Min. Green:	10	10	10	10	10	10	7	10	10	7	10	10
Y+R:	4.0	4.0	4.0	4.0	4.0	4.0	4.0	4.0	4.0	4.0	4.0	4.0
Volume Module:												
Base Vol:	267	8	164	19	28	15	14	237	809	759	1015	51
Growth Adj:	1.00	1.00	1.00	1.00	1.00	1.00	1.00	1.00	1.00	1.00	1.00	1.00
Initial Bse:	267	8	164	19	28	15	14	237	809	759	1015	51
Added Vol:	0	0	0	0	0	0	0	0	0	0	0	0
PasserByVol:	0	0	0	0	0	0	0	0	0	0	0	0
Initial Fut:	267	8	164	19	28	15	14	237	809	759	1015	51
User Adj:	1.00	1.00	1.00	1.00	1.00	1.00	1.00	1.00	1.00	1.00	1.00	1.00
PHF Adj:	1.00	1.00	1.00	1.00	1.00	1.00	1.00	1.00	1.00	1.00	1.00	1.00
PHF Volume:	267	8	164	19	28	15	14	237	809	759	1015	51
Reduct Vol:	0	0	0	0	0	0	0	0	0	0	0	0
Reduced Vol:	267	8	164	19	28	15	14	237	809	759	1015	51
PCE Adj:	1.00	1.00	1.00	1.00	1.00	1.00	1.00	1.00	1.00	1.00	1.00	1.00
MLF Adj:	1.00	1.00	1.00	1.00	1.00	1.00	1.00	1.00	1.00	1.00	1.00	1.00
FinalVolume:	267	8	164	19	28	15	14	237	809	759	1015	51
Saturation Flow Module:												
Sat/Lane:	1900	1900	1900	1900	1900	1900	1900	1900	1900	1900	1900	1900
Adjustment:	0.92	1.00	0.92	0.92	1.00	0.92	0.92	1.00	0.92	0.92	1.00	0.92
Lanes:	1.95	0.05	1.00	1.00	1.00	1.00	1.00	2.00	1.00	1.00	2.00	1.00
Final Sat.:	3406	102	1750	1750	1900	1750	1750	3800	1750	1750	3800	1750
Capacity Analysis Module:												
Vol/Sat:	0.08	0.08	0.09	0.01	0.01	0.01	0.01	0.06	0.46	0.43	0.27	0.03
Crit Moves:			****		****				****	****		
Green/Cycle:	0.08	0.08	0.08	0.06	0.06	0.06	0.10	0.41	0.41	0.38	0.69	0.69
Volume/Cap:	0.94	0.94	1.13	0.20	0.27	0.15	0.08	0.15	1.13	1.13	0.39	0.04
Delay/Veh:	122.1	122	195.5	83.0	85.1	84.3	74.2	33.6	127.6	130.8	12.0	8.8
User DelAdj:	1.00	1.00	1.00	1.00	1.00	1.00	1.00	1.00	1.00	1.00	1.00	1.00
AdjDel/Veh:	122.1	122	195.5	83.0	85.1	84.3	74.2	33.6	127.6	130.8	12.0	8.8
LOS by Move:	F	F	F	F	F	F	E	C	F	F	B	A
HCM2kAvgQ:	11	11	15	1	2	1	1	4	62	59	11	1

Note: Queue reported is the number of cars per lane.

Milpitas Boulevard Extension Bridge

Level Of Service Computation Report
2000 HCM Operations (Future Volume Alternative)
Cumulative + Project AM

Intersection #2: LUNDY/TRADE ZONE

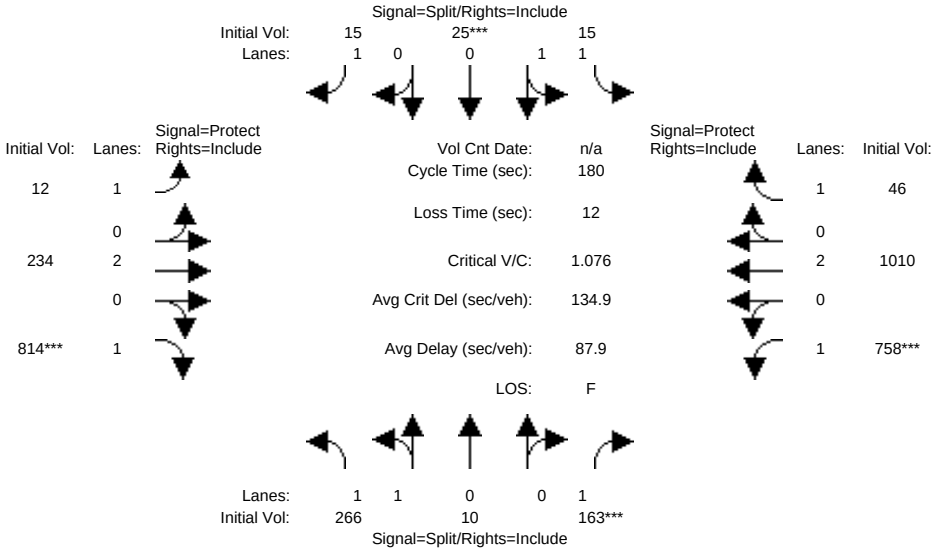

Approach:	North Bound			South Bound			East Bound			West Bound		
Movement:	L -	T -	R	L -	T -	R	L -	T -	R	L -	T -	R
Min. Green:	10	10	10	10	10	10	7	10	10	7	10	10
Y+R:	4.0	4.0	4.0	4.0	4.0	4.0	4.0	4.0	4.0	4.0	4.0	4.0
Volume Module:												
Base Vol:	266	10	163	15	25	15	12	234	814	758	1010	46
Growth Adj:	1.00	1.00	1.00	1.00	1.00	1.00	1.00	1.00	1.00	1.00	1.00	1.00
Initial Bse:	266	10	163	15	25	15	12	234	814	758	1010	46
Added Vol:	0	0	0	0	0	0	0	0	0	0	0	0
PasserByVol:	0	0	0	0	0	0	0	0	0	0	0	0
Initial Fut:	266	10	163	15	25	15	12	234	814	758	1010	46
User Adj:	1.00	1.00	1.00	1.00	1.00	1.00	1.00	1.00	1.00	1.00	1.00	1.00
PHF Adj:	1.00	1.00	1.00	1.00	1.00	1.00	1.00	1.00	1.00	1.00	1.00	1.00
PHF Volume:	266	10	163	15	25	15	12	234	814	758	1010	46
Reduct Vol:	0	0	0	0	0	0	0	0	0	0	0	0
Reduced Vol:	266	10	163	15	25	15	12	234	814	758	1010	46
PCE Adj:	1.00	1.00	1.00	1.00	1.00	1.00	1.00	1.00	1.00	1.00	1.00	1.00
MLF Adj:	1.00	1.00	1.00	1.00	1.00	1.00	1.00	1.00	1.00	1.00	1.00	1.00
FinalVolume:	266	10	163	15	25	15	12	234	814	758	1010	46
Saturation Flow Module:												
Sat/Lane:	1900	1900	1900	1900	1900	1900	1900	1900	1900	1900	1900	1900
Adjustment:	0.92	1.00	0.92	0.92	1.00	0.92	0.92	1.00	0.92	0.92	1.00	0.92
Lanes:	1.93	0.07	1.00	1.00	1.00	1.00	1.00	2.00	1.00	1.00	2.00	1.00
Final Sat.:	3383	127	1750	1750	1900	1750	1750	3800	1750	1750	3800	1750
Capacity Analysis Module:												
Vol/Sat:	0.08	0.08	0.09	0.01	0.01	0.01	0.01	0.06	0.47	0.43	0.27	0.03
Crit Moves:			****		****				****	****		
Green/Cycle:	0.08	0.08	0.08	0.06	0.06	0.06	0.10	0.41	0.41	0.38	0.69	0.69
Volume/Cap:	0.95	0.95	1.13	0.15	0.24	0.15	0.07	0.15	1.13	1.13	0.38	0.04
Delay/Veh:	124.5	124	196.5	82.2	84.6	84.3	73.9	33.4	128.1	131.6	11.9	8.7
User DelAdj:	1.00	1.00	1.00	1.00	1.00	1.00	1.00	1.00	1.00	1.00	1.00	1.00
AdjDel/Veh:	124.5	124	196.5	82.2	84.6	84.3	73.9	33.4	128.1	131.6	11.9	8.7
LOS by Move:	F	F	F	F	F	F	E	C	F	F	B	A
HCM2kAvgQ:	11	11	15	1	1	1	1	4	63	59	11	1

Note: Queue reported is the number of cars per lane.

Milpitas Boulevard Extension Bridge

Level Of Service Computation Report
2000 HCM Operations (Future Volume Alternative)
Cumulative AM

Intersection #3: MONTAGUE EXPWY/TRADE ZONE BLVD

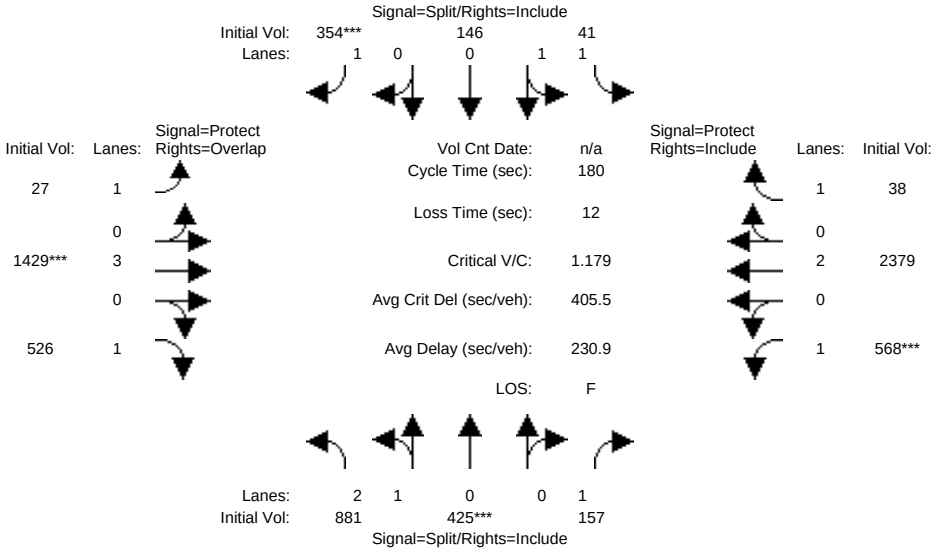

Street Name:	Trade Zone Blvd						Montague Expressway					
Approach:	North Bound			South Bound			East Bound			West Bound		
Movement:	L -	T -	R	L -	T -	R	L -	T -	R	L -	T -	R
Min. Green:	10	10	10	10	10	10	7	100	10	7	107	10
Y+R:	4.0	4.0	4.0	4.0	4.0	4.0	4.0	4.0	4.0	4.0	4.0	4.0
Volume Module:												
Base Vol:	881	425	157	41	146	354	27	1429	526	568	2379	38
Growth Adj:	1.00	1.00	1.00	1.00	1.00	1.00	1.00	1.00	1.00	1.00	1.00	1.00
Initial Bse:	881	425	157	41	146	354	27	1429	526	568	2379	38
Added Vol:	0	0	0	0	0	0	0	0	0	0	0	0
PasserByVol:	0	0	0	0	0	0	0	0	0	0	0	0
Initial Fut:	881	425	157	41	146	354	27	1429	526	568	2379	38
User Adj:	1.00	1.00	1.00	1.00	1.00	1.00	1.00	1.00	1.00	1.00	1.00	1.00
PHF Adj:	1.00	1.00	1.00	1.00	1.00	1.00	1.00	1.00	1.00	1.00	1.00	1.00
PHF Volume:	881	425	157	41	146	354	27	1429	526	568	2379	38
Reduct Vol:	0	0	0	0	0	0	0	0	0	0	0	0
Reduced Vol:	881	425	157	41	146	354	27	1429	526	568	2379	38
PCE Adj:	1.00	1.00	1.00	1.00	1.00	1.00	1.00	1.00	1.00	1.00	1.00	1.00
MLF Adj:	1.00	1.00	1.00	1.00	1.00	1.00	1.00	1.00	1.00	1.00	1.00	1.00
FinalVolume:	881	425	157	41	146	354	27	1429	526	568	2379	38
Saturation Flow Module:												
Sat/Lane:	1900	1900	1900	1900	1900	1900	1900	1900	1900	1900	1900	1900
Adjustment:	0.80	0.97	0.78	0.91	0.99	0.78	0.87	1.00	0.78	0.87	1.00	0.78
Lanes:	2.14	0.86	1.00	1.00	1.00	1.00	1.00	3.00	1.00	1.00	2.00	1.00
Final Sat.:	3264	1575	1488	1731	1879	1488	1663	5700	1488	1663	3800	1488
Capacity Analysis Module:												
Vol/Sat:	0.27	0.27	0.11	0.02	0.08	0.24	0.02	0.25	0.35	0.34	0.63	0.03
Crit Moves:		****				****		****		****		
Green/Cycle:	0.12	0.12	0.12	0.11	0.11	0.11	0.04	0.56	0.68	0.15	0.67	0.67
Volume/Cap:	2.25	2.25	0.88	0.22	0.73	2.25	0.39	0.45	0.52	2.25	0.94	0.04
Delay/Veh:	646.7	647	113.7	73.8	88.6	662.3	87.7	23.8	15.2	650.9	34.6	10.3
User DelAdj:	1.00	1.00	1.00	1.00	1.00	1.00	1.00	1.00	1.00	1.00	1.00	1.00
AdjDel/Veh:	646.7	647	113.7	73.8	88.6	662.3	87.7	23.8	15.2	650.9	34.6	10.3
LOS by Move:	F	F	F	E	F	F	F	C	B	F	C	B
HCM2kAvgQ:	61	61	12	2	9	48	2	15	15	75	61	1

Note: Queue reported is the number of cars per lane.

Milpitas Boulevard Extension Bridge

Level Of Service Computation Report
2000 HCM Operations (Future Volume Alternative)
Cumulative + Project AM

Intersection #3: MONTAGUE EXPWY/TRADE ZONE BLVD

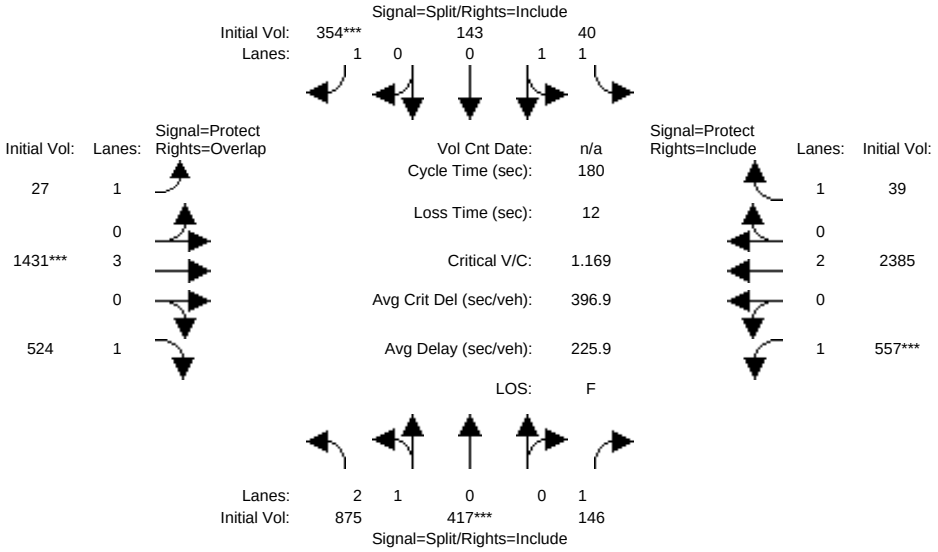

Street Name:	Trade Zone Blvd						Montague Expressway					
Approach:	North Bound			South Bound			East Bound			West Bound		
Movement:	L -	T -	R	L -	T -	R	L -	T -	R	L -	T -	R
Min. Green:	10	10	10	10	10	10	7	100	10	7	107	10
Y+R:	4.0	4.0	4.0	4.0	4.0	4.0	4.0	4.0	4.0	4.0	4.0	4.0
Volume Module:												
Base Vol:	875	417	146	40	143	354	27	1431	524	557	2385	39
Growth Adj:	1.00	1.00	1.00	1.00	1.00	1.00	1.00	1.00	1.00	1.00	1.00	1.00
Initial Bse:	875	417	146	40	143	354	27	1431	524	557	2385	39
Added Vol:	0	0	0	0	0	0	0	0	0	0	0	0
PasserByVol:	0	0	0	0	0	0	0	0	0	0	0	0
Initial Fut:	875	417	146	40	143	354	27	1431	524	557	2385	39
User Adj:	1.00	1.00	1.00	1.00	1.00	1.00	1.00	1.00	1.00	1.00	1.00	1.00
PHF Adj:	1.00	1.00	1.00	1.00	1.00	1.00	1.00	1.00	1.00	1.00	1.00	1.00
PHF Volume:	875	417	146	40	143	354	27	1431	524	557	2385	39
Reduct Vol:	0	0	0	0	0	0	0	0	0	0	0	0
Reduced Vol:	875	417	146	40	143	354	27	1431	524	557	2385	39
PCE Adj:	1.00	1.00	1.00	1.00	1.00	1.00	1.00	1.00	1.00	1.00	1.00	1.00
MLF Adj:	1.00	1.00	1.00	1.00	1.00	1.00	1.00	1.00	1.00	1.00	1.00	1.00
FinalVolume:	875	417	146	40	143	354	27	1431	524	557	2385	39
Saturation Flow Module:												
Sat/Lane:	1900	1900	1900	1900	1900	1900	1900	1900	1900	1900	1900	1900
Adjustment:	0.80	0.97	0.78	0.91	0.99	0.78	0.87	1.00	0.78	0.87	1.00	0.78
Lanes:	2.15	0.85	1.00	1.00	1.00	1.00	1.00	3.00	1.00	1.00	2.00	1.00
Final Sat.:	3275	1561	1488	1731	1879	1488	1663	5700	1488	1663	3800	1488
Capacity Analysis Module:												
Vol/Sat:	0.27	0.27	0.10	0.02	0.08	0.24	0.02	0.25	0.35	0.34	0.63	0.03
Crit Moves:		****				****		****		****		
Green/Cycle:	0.12	0.12	0.12	0.11	0.11	0.11	0.04	0.56	0.68	0.15	0.66	0.66
Volume/Cap:	2.22	2.22	0.82	0.22	0.71	2.22	0.39	0.45	0.52	2.22	0.94	0.04
Delay/Veh:	635.6	636	101.8	73.6	86.6	651.0	87.8	23.8	15.1	640.0	35.3	10.4
User DelAdj:	1.00	1.00	1.00	1.00	1.00	1.00	1.00	1.00	1.00	1.00	1.00	1.00
AdjDel/Veh:	635.6	636	101.8	73.6	86.6	651.0	87.8	23.8	15.1	640.0	35.3	10.4
LOS by Move:	F	F	F	E	F	F	F	C	B	F	D	B
HCM2kAvgQ:	60	60	10	2	9	47	2	15	15	74	62	1

Note: Queue reported is the number of cars per lane.

Milpitas Boulevard Extension Bridge

Level Of Service Computation Report
2000 HCM Operations (Future Volume Alternative)
Cumulative AM

Intersection #4: MONTAGUE EXPWY/CAPITOL AVE

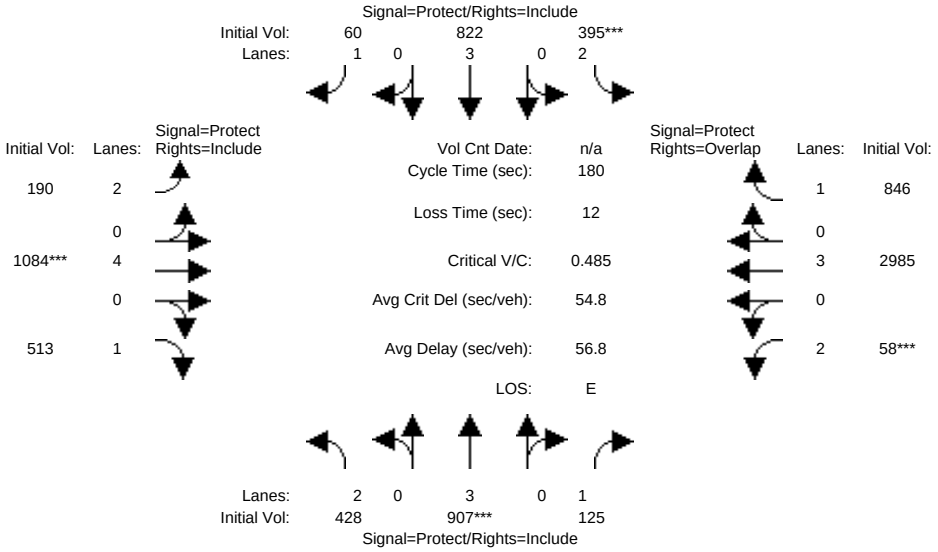

Approach:	North Bound			South Bound			East Bound			West Bound		
Movement:	L -	T -	R	L -	T -	R	L -	T -	R	L -	T -	R
Min. Green:	7	10	10	7	10	10	7	100	10	7	90	10
Y+R:	4.0	4.0	4.0	4.0	4.0	4.0	4.0	4.0	4.0	4.0	4.0	4.0
Volume Module:												
Base Vol:	428	907	125	395	822	60	190	1084	513	58	2985	846
Growth Adj:	1.00	1.00	1.00	1.00	1.00	1.00	1.00	1.00	1.00	1.00	1.00	1.00
Initial Bse:	428	907	125	395	822	60	190	1084	513	58	2985	846
Added Vol:	0	0	0	0	0	0	0	0	0	0	0	0
PasserByVol:	0	0	0	0	0	0	0	0	0	0	0	0
Initial Fut:	428	907	125	395	822	60	190	1084	513	58	2985	846
User Adj:	1.00	1.00	1.00	1.00	1.00	1.00	1.00	1.00	1.00	1.00	1.00	1.00
PHF Adj:	1.00	1.00	1.00	1.00	1.00	1.00	1.00	1.00	1.00	1.00	1.00	1.00
PHF Volume:	428	907	125	395	822	60	190	1084	513	58	2985	846
Reduct Vol:	0	0	0	0	0	0	0	0	0	0	0	0
Reduced Vol:	428	907	125	395	822	60	190	1084	513	58	2985	846
PCE Adj:	1.00	1.00	1.00	1.00	1.00	1.00	1.00	1.00	1.00	1.00	1.00	1.00
MLF Adj:	1.00	1.00	1.00	1.00	1.00	1.00	1.00	1.00	1.00	1.00	1.00	1.00
FinalVolume:	428	907	125	395	822	60	190	1084	513	58	2985	846
Saturation Flow Module:												
Sat/Lane:	1900	1900	1900	1900	1900	1900	1900	1900	1900	1900	1900	1900
Adjustment:	0.79	1.00	0.78	0.79	1.00	0.78	0.79	1.00	0.78	0.79	1.00	0.78
Lanes:	2.00	3.00	1.00	2.00	3.00	1.00	2.00	4.00	1.00	2.00	3.00	1.00
Final Sat.:	2993	5700	1488	2993	5700	1488	2993	7600	1488	2993	5700	1488
Capacity Analysis Module:												
Vol/Sat:	0.14	0.16	0.08	0.13	0.14	0.04	0.06	0.14	0.34	0.02	0.52	0.57
Crit Moves:		****		****				****		****		
Green/Cycle:	0.17	0.19	0.19	0.15	0.17	0.17	0.06	0.56	0.56	0.04	0.53	0.68
Volume/Cap:	0.85	0.86	0.45	0.86	0.85	0.24	0.99	0.26	0.62	0.50	0.99	0.83
Delay/Veh:	85.2	78.3	66.4	89.2	79.5	65.1	145.3	20.8	28.6	88.1	55.3	26.8
User DelAdj:	1.00	1.00	1.00	1.00	1.00	1.00	1.00	1.00	1.00	1.00	1.00	1.00
AdjDel/Veh:	85.2	78.3	66.4	89.2	79.5	65.1	145.3	20.8	28.6	88.1	55.3	26.8
LOS by Move:	F	E	E	F	E	E	F	C	C	F	E	C
HCM2kAvgQ:	16	18	7	15	17	3	9	7	20	3	59	38

Note: Queue reported is the number of cars per lane.

Milpitas Boulevard Extension Bridge

Level Of Service Computation Report
2000 HCM Operations (Future Volume Alternative)
Cumulative + Project AM

Intersection #4: MONTAGUE EXPWY/CAPITOL AVE

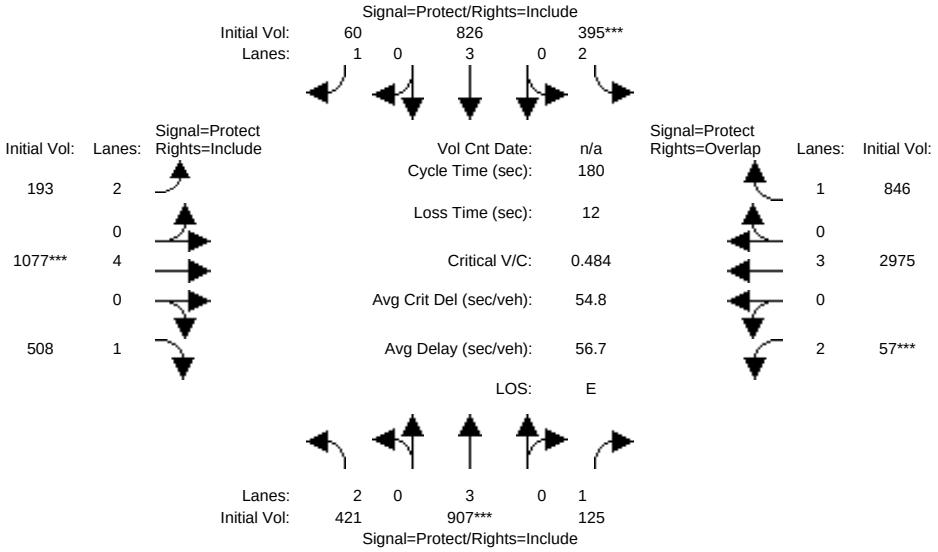

Approach:	North Bound			South Bound			East Bound			West Bound		
Movement:	L -	T -	R	L -	T -	R	L -	T -	R	L -	T -	R
Min. Green:	7	10	10	7	10	10	7	100	10	7	90	10
Y+R:	4.0	4.0	4.0	4.0	4.0	4.0	4.0	4.0	4.0	4.0	4.0	4.0
Volume Module:												
Base Vol:	421	907	125	395	826	60	193	1077	508	57	2975	846
Growth Adj:	1.00	1.00	1.00	1.00	1.00	1.00	1.00	1.00	1.00	1.00	1.00	1.00
Initial Bse:	421	907	125	395	826	60	193	1077	508	57	2975	846
Added Vol:	0	0	0	0	0	0	0	0	0	0	0	0
PasserByVol:	0	0	0	0	0	0	0	0	0	0	0	0
Initial Fut:	421	907	125	395	826	60	193	1077	508	57	2975	846
User Adj:	1.00	1.00	1.00	1.00	1.00	1.00	1.00	1.00	1.00	1.00	1.00	1.00
PHF Adj:	1.00	1.00	1.00	1.00	1.00	1.00	1.00	1.00	1.00	1.00	1.00	1.00
PHF Volume:	421	907	125	395	826	60	193	1077	508	57	2975	846
Reduct Vol:	0	0	0	0	0	0	0	0	0	0	0	0
Reduced Vol:	421	907	125	395	826	60	193	1077	508	57	2975	846
PCE Adj:	1.00	1.00	1.00	1.00	1.00	1.00	1.00	1.00	1.00	1.00	1.00	1.00
MLF Adj:	1.00	1.00	1.00	1.00	1.00	1.00	1.00	1.00	1.00	1.00	1.00	1.00
FinalVolume:	421	907	125	395	826	60	193	1077	508	57	2975	846
Saturation Flow Module:												
Sat/Lane:	1900	1900	1900	1900	1900	1900	1900	1900	1900	1900	1900	1900
Adjustment:	0.79	1.00	0.78	0.79	1.00	0.78	0.79	1.00	0.78	0.79	1.00	0.78
Lanes:	2.00	3.00	1.00	2.00	3.00	1.00	2.00	4.00	1.00	2.00	3.00	1.00
Final Sat.:	2993	5700	1488	2993	5700	1488	2993	7600	1488	2993	5700	1488
Capacity Analysis Module:												
Vol/Sat:	0.14	0.16	0.08	0.13	0.14	0.04	0.06	0.14	0.34	0.02	0.52	0.57
Crit Moves:		****		****				****		****		
Green/Cycle:	0.17	0.19	0.19	0.15	0.17	0.17	0.07	0.56	0.56	0.04	0.53	0.68
Volume/Cap:	0.84	0.86	0.45	0.86	0.84	0.23	0.99	0.26	0.61	0.49	0.99	0.83
Delay/Veh:	85.0	78.3	66.4	89.2	78.9	64.8	144.3	20.7	28.4	88.0	55.1	27.0
User DelAdj:	1.00	1.00	1.00	1.00	1.00	1.00	1.00	1.00	1.00	1.00	1.00	1.00
AdjDel/Veh:	85.0	78.3	66.4	89.2	78.9	64.8	144.3	20.7	28.4	88.0	55.1	27.0
LOS by Move:	F	E	E	F	E	E	F	C	C	F	E	C
HCM2kAvgQ:	16	18	7	15	17	3	10	7	20	2	59	38

Note: Queue reported is the number of cars per lane.

Milpitas Boulevard Extension Bridge

Level Of Service Computation Report
2000 HCM Unsignalized (Future Volume Alternative)
Cumulative AM

Intersection #5: Montague Expressway/Sango Ct

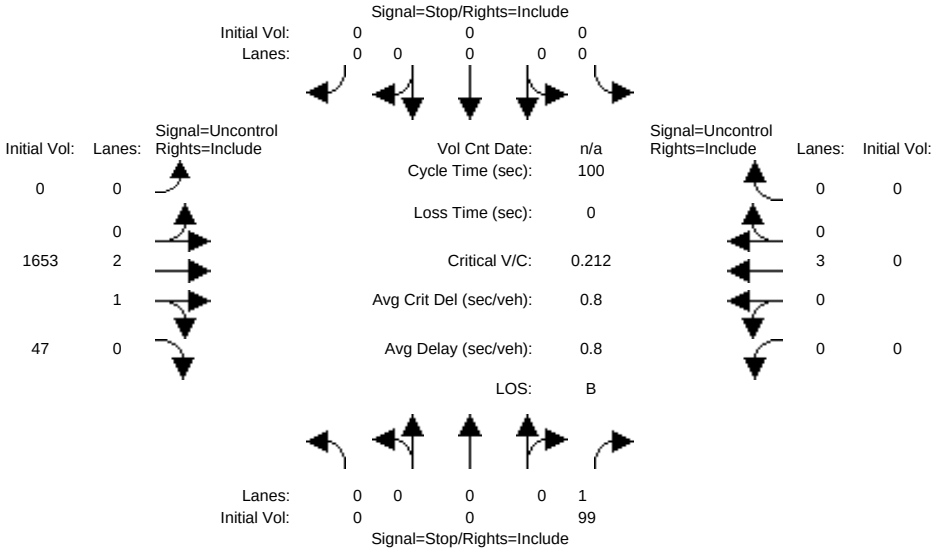


```
Street Name:              Sango Ct                    Montague Expressway
Approach:       North Bound      South Bound       East Bound       West Bound
Movement:      L  -  T  -  R    L  -  T  -  R    L  -  T  -  R    L  -  T  -  R
------------|---------------||---------------||---------------||---------------|
Volume Module:
Base Vol:       0    0    99     0    0     0     0 1653    47     0    0     0
Growth Adj:  1.00 1.00  1.00  1.00 1.00  1.00  1.00 1.00  1.00  1.00 1.00  1.00
Initial Bse:    0    0    99     0    0     0     0 1653    47     0    0     0
Added Vol:      0    0     0     0    0     0     0    0     0     0    0     0
PasserByVol:    0    0     0     0    0     0     0    0     0     0    0     0
Initial Fut:    0    0    99     0    0     0     0 1653    47     0    0     0
User Adj:    1.00 1.00  1.00  1.00 1.00  1.00  1.00 1.00  1.00  1.00 1.00  1.00
PHF Adj:     1.00 1.00  1.00  1.00 1.00  1.00  1.00 1.00  1.00  1.00 1.00  1.00
PHF Volume:     0    0    99     0    0     0     0 1653    47     0    0     0
Reduct Vol:     0    0     0     0    0     0     0    0     0     0    0     0
FinalVolume:    0    0    99     0    0     0     0 1653    47     0    0     0
------------|---------------||---------------||---------------||---------------|
Critical Gap Module:
Critical Gp:xxxxx xxxx   6.9 xxxxx xxxx xxxxx xxxxx xxxx xxxxx xxxxx xxxx xxxxx
FollowUpTim:xxxxx xxxx   3.3 xxxxx xxxx xxxxx xxxxx xxxx xxxxx xxxxx xxxx xxxxx
------------|---------------||---------------||---------------||---------------|
Capacity Module:
Cnflict Vol: xxxx xxxx   575  xxxx xxxx xxxxx  xxxx xxxx xxxxx  xxxx xxxx xxxxx
Potent Cap.: xxxx xxxx   467  xxxx xxxx xxxxx  xxxx xxxx xxxxx  xxxx xxxx xxxxx
Move Cap.:   xxxx xxxx   467  xxxx xxxx xxxxx  xxxx xxxx xxxxx  xxxx xxxx xxxxx
Volume/Cap:  xxxx xxxx  0.21  xxxx xxxx  xxxx  xxxx xxxx  xxxx  xxxx xxxx  xxxx
------------|---------------||---------------||---------------||---------------|
Level Of Service Module:
2Way95thQ:   xxxx xxxx   0.8  xxxx xxxx xxxxx  xxxx xxxx xxxxx  xxxx xxxx xxxxx
Control Del:xxxxx xxxx  14.8 xxxxx xxxx xxxxx xxxxx xxxx xxxxx xxxxx xxxx xxxxx
LOS by Move:    *    *     B     *    *     *     *    *     *     *    *     *
Movement:     LT - LTR - RT    LT - LTR - RT    LT - LTR - RT    LT - LTR - RT
Shared Cap.: xxxx xxxx xxxxx  xxxx xxxx xxxxx  xxxx xxxx xxxxx  xxxx xxxx xxxxx
SharedQueue:xxxxx xxxx xxxxx xxxxx xxxx xxxxx xxxxx xxxx xxxxx xxxxx xxxx xxxxx
Shrd ConDel:xxxxx xxxx xxxxx xxxxx xxxx xxxxx xxxxx xxxx xxxxx xxxxx xxxx xxxxx
Shared LOS:     *    *     *     *    *     *     *    *     *     *    *     *
ApproachDel:      14.8           xxxxxx           xxxxxx           xxxxxx
ApproachLOS:         B                *                *                *
Note: Queue reported is the number of cars per lane.
                     Peak Hour Delay Signal Warrant Report
*******************************************************************************
Intersection #5 Montague Expressway/Sango Ct
*******************************************************************************
Future Volume Alternative: Peak Hour Warrant NOT Met
```

```
------------|---------------||---------------||---------------||---------------|
Approach:      North Bound      South Bound       East Bound       West Bound
Movement:     L  -  T  -  R    L  -  T  -  R    L  -  T  -  R    L  -  T  -  R
------------|---------------||---------------||---------------||---------------|
Control:        Stop Sign        Stop Sign       Uncontrolled     Uncontrolled
Lanes:        0  0  0  0  1    0  0  0  0  0    0  0  2  1  0    0  0  3  0  0
Initial Vol:    0    0    99     0    0     0     0 1653    47     0    0     0
ApproachDel:      14.8           xxxxxx           xxxxxx           xxxxxx
------------|---------------||---------------||---------------||---------------|
Approach[northbound][lanes=1][control=Stop Sign]
Signal Warrant Rule #1: [vehicle-hours=0.4]
   FAIL - Vehicle-hours less than 4 for one lane approach.
Signal Warrant Rule #2: [approach volume=99]
   FAIL - Approach volume less than 100 for one lane approach.
Signal Warrant Rule #3: [approach count=2][total volume=1799]
   SUCCEED - Total volume greater than or equal to 650 for intersection
             with less than four approaches.
--------------------------------------------------------------------------------
SIGNAL WARRANT DISCLAIMER
This peak hour signal warrant analysis should be considered solely as an
"indicator" of the likelihood of an unsignalized intersection warranting
a traffic signal in the future.  Intersections that exceed this warrant
are probably more likely to meet one or more of the other volume based
signal warrant (such as the 4-hour or 8-hour warrants).

The peak hour warrant analysis in this report is not intended to replace
a rigorous and complete traffic signal warrant analysis by the responsible
jurisdiction.  Consideration of the other signal warrants, which is beyond
the scope of this software, may yield different results.
                Peak Hour Volume Signal Warrant Report [Urban]
********************************************************************************
Intersection #5 Montague Expressway/Sango Ct
********************************************************************************
Future Volume Alternative: Peak Hour Warrant NOT Met
------------|---------------||---------------||---------------||---------------|
Approach:      North Bound      South Bound       East Bound       West Bound
Movement:     L  -  T  -  R    L  -  T  -  R    L  -  T  -  R    L  -  T  -  R
------------|---------------||---------------||---------------||---------------|
Control:        Stop Sign        Stop Sign       Uncontrolled     Uncontrolled
Lanes:        0  0  0  0  1    0  0  0  0  0    0  0  2  1  0    0  0  3  0  0
Initial Vol:    0    0    99     0    0     0     0 1653    47     0    0     0
------------|---------------||---------------||---------------||---------------|
Major Street Volume:             1700
Minor Approach Volume:           99
Minor Approach Volume Threshold: 102
--------------------------------------------------------------------------------
SIGNAL WARRANT DISCLAIMER
This peak hour signal warrant analysis should be considered solely as an
"indicator" of the likelihood of an unsignalized intersection warranting
a traffic signal in the future.  Intersections that exceed this warrant
are probably more likely to meet one or more of the other volume based
signal warrant (such as the 4-hour or 8-hour warrants).

The peak hour warrant analysis in this report is not intended to replace
a rigorous and complete traffic signal warrant analysis by the responsible
jurisdiction.  Consideration of the other signal warrants, which is beyond
the scope of this software, may yield different results.
```

Milpitas Boulevard Extension Bridge

Level Of Service Computation Report
2000 HCM Unsignalized (Future Volume Alternative)
Cumulative + Project AM

Intersection #5: Montague Expressway/Sango Ct

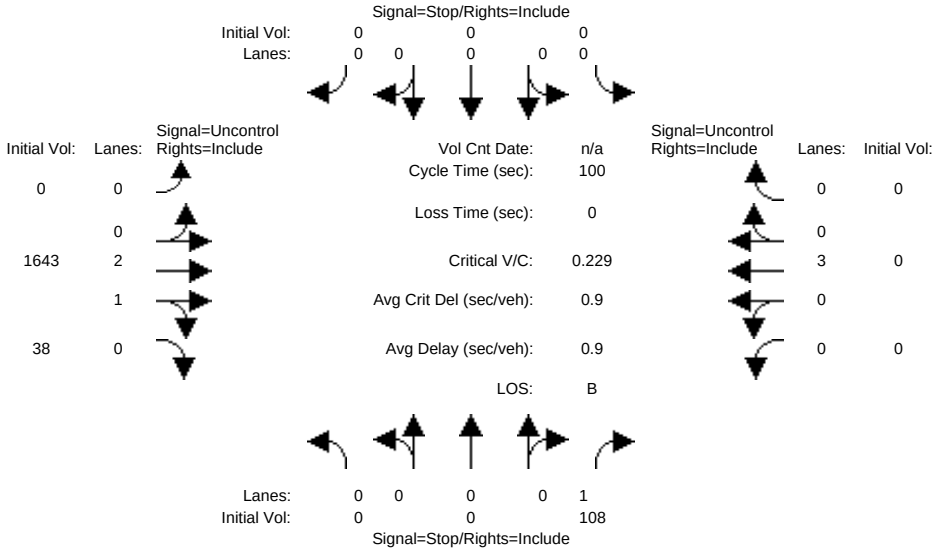


```
Street Name:              Sango Ct                    Montague Expressway
Approach:      North Bound      South Bound       East Bound       West Bound
Movement:     L  -  T  -  R    L  -  T  -  R    L  -  T  -  R    L  -  T  -  R
------------|---------------||---------------||---------------||---------------|
Volume Module:
Base Vol:       0    0   108     0    0     0     0 1643    38     0    0     0
Growth Adj:  1.00 1.00  1.00  1.00 1.00  1.00  1.00 1.00  1.00  1.00 1.00  1.00
Initial Bse:    0    0   108     0    0     0     0 1643    38     0    0     0
Added Vol:      0    0     0     0    0     0     0    0     0     0    0     0
PasserByVol:    0    0     0     0    0     0     0    0     0     0    0     0
Initial Fut:    0    0   108     0    0     0     0 1643    38     0    0     0
User Adj:    1.00 1.00  1.00  1.00 1.00  1.00  1.00 1.00  1.00  1.00 1.00  1.00
PHF Adj:     1.00 1.00  1.00  1.00 1.00  1.00  1.00 1.00  1.00  1.00 1.00  1.00
PHF Volume:     0    0   108     0    0     0     0 1643    38     0    0     0
Reduct Vol:     0    0     0     0    0     0     0    0     0     0    0     0
FinalVolume:    0    0   108     0    0     0     0 1643    38     0    0     0
------------|---------------||---------------||---------------||---------------|
Critical Gap Module:
Critical Gp:xxxxx xxxx   6.9 xxxxx xxxx xxxxx xxxxx xxxx xxxxx xxxxx xxxx xxxxx
FollowUpTim:xxxxx xxxx   3.3 xxxxx xxxx xxxxx xxxxx xxxx xxxxx xxxxx xxxx xxxxx
------------|---------------||---------------||---------------||---------------|
Capacity Module:
Cnflict Vol: xxxx xxxx   567  xxxx xxxx xxxxx  xxxx xxxx xxxxx  xxxx xxxx xxxxx
Potent Cap.: xxxx xxxx   472  xxxx xxxx xxxxx  xxxx xxxx xxxxx  xxxx xxxx xxxxx
Move Cap.:   xxxx xxxx   472  xxxx xxxx xxxxx  xxxx xxxx xxxxx  xxxx xxxx xxxxx
Volume/Cap:  xxxx xxxx  0.23  xxxx xxxx  xxxx  xxxx xxxx  xxxx  xxxx xxxx  xxxx
------------|---------------||---------------||---------------||---------------|
Level Of Service Module:
2Way95thQ:   xxxx xxxx   0.9  xxxx xxxx xxxxx  xxxx xxxx xxxxx  xxxx xxxx xxxxx
Control Del:xxxxx xxxx  14.9 xxxxx xxxx xxxxx xxxxx xxxx xxxxx xxxxx xxxx xxxxx
LOS by Move:    *    *     B     *    *     *     *    *     *     *    *     *
Movement:     LT - LTR - RT    LT - LTR - RT    LT - LTR - RT    LT - LTR - RT
Shared Cap.: xxxx xxxx xxxxx  xxxx xxxx xxxxx  xxxx xxxx xxxxx  xxxx xxxx xxxxx
SharedQueue:xxxxx xxxx xxxxx xxxxx xxxx xxxxx xxxxx xxxx xxxxx xxxxx xxxx xxxxx
Shrd ConDel:xxxxx xxxx xxxxx xxxxx xxxx xxxxx xxxxx xxxx xxxxx xxxxx xxxx xxxxx
Shared LOS:     *    *     *     *    *     *     *    *     *     *    *     *
ApproachDel:      14.9           xxxxxx           xxxxxx           xxxxxx
ApproachLOS:         B                *                *                *
Note: Queue reported is the number of cars per lane.
                     Peak Hour Delay Signal Warrant Report
*******************************************************************************
Intersection #5 Montague Expressway/Sango Ct
*******************************************************************************
Future Volume Alternative: Peak Hour Warrant NOT Met
```

```
------------|---------------||---------------||---------------||---------------|
Approach:      North Bound      South Bound       East Bound       West Bound
Movement:     L  -  T  -  R    L  -  T  -  R    L  -  T  -  R    L  -  T  -  R
------------|---------------||---------------||---------------||---------------|
Control:        Stop Sign        Stop Sign       Uncontrolled     Uncontrolled
Lanes:        0  0  0  0  1    0  0  0  0  0    0  0  2  1  0    0  0  3  0  0
Initial Vol:    0    0   108     0    0     0     0 1643    38     0    0     0
ApproachDel:      14.9           xxxxxx           xxxxxx           xxxxxx
------------|---------------||---------------||---------------||---------------|
Approach[northbound][lanes=1][control=Stop Sign]
Signal Warrant Rule #1: [vehicle-hours=0.4]
   FAIL - Vehicle-hours less than 4 for one lane approach.
Signal Warrant Rule #2: [approach volume=108]
   SUCCEED - Approach volume greater than or equal to 100 for one lane approach.
Signal Warrant Rule #3: [approach count=2][total volume=1789]
   SUCCEED - Total volume greater than or equal to 650 for intersection
             with less than four approaches.
--------------------------------------------------------------------------------
SIGNAL WARRANT DISCLAIMER
This peak hour signal warrant analysis should be considered solely as an
"indicator" of the likelihood of an unsignalized intersection warranting
a traffic signal in the future.  Intersections that exceed this warrant
are probably more likely to meet one or more of the other volume based
signal warrant (such as the 4-hour or 8-hour warrants).

The peak hour warrant analysis in this report is not intended to replace
a rigorous and complete traffic signal warrant analysis by the responsible
jurisdiction.  Consideration of the other signal warrants, which is beyond
the scope of this software, may yield different results.
                Peak Hour Volume Signal Warrant Report [Urban]
********************************************************************************
Intersection #5 Montague Expressway/Sango Ct
********************************************************************************
Future Volume Alternative: Peak Hour Warrant Met
------------|---------------||---------------||---------------||---------------|
Approach:      North Bound      South Bound       East Bound       West Bound
Movement:     L  -  T  -  R    L  -  T  -  R    L  -  T  -  R    L  -  T  -  R
------------|---------------||---------------||---------------||---------------|
Control:        Stop Sign        Stop Sign       Uncontrolled     Uncontrolled
Lanes:        0  0  0  0  1    0  0  0  0  0    0  0  2  1  0    0  0  3  0  0
Initial Vol:    0    0   108     0    0     0     0 1643    38     0    0     0
------------|---------------||---------------||---------------||---------------|
Major Street Volume:             1681
Minor Approach Volume:           108
Minor Approach Volume Threshold: 106
--------------------------------------------------------------------------------
SIGNAL WARRANT DISCLAIMER
This peak hour signal warrant analysis should be considered solely as an
"indicator" of the likelihood of an unsignalized intersection warranting
a traffic signal in the future.  Intersections that exceed this warrant
are probably more likely to meet one or more of the other volume based
signal warrant (such as the 4-hour or 8-hour warrants).

The peak hour warrant analysis in this report is not intended to replace
a rigorous and complete traffic signal warrant analysis by the responsible
jurisdiction.  Consideration of the other signal warrants, which is beyond
the scope of this software, may yield different results.
```

Milpitas Boulevard Extension Bridge

Level Of Service Computation Report
2000 HCM Operations (Future Volume Alternative)
Existing PM

Intersection #1: CAPITOL AVE/MILPITAS BLVD

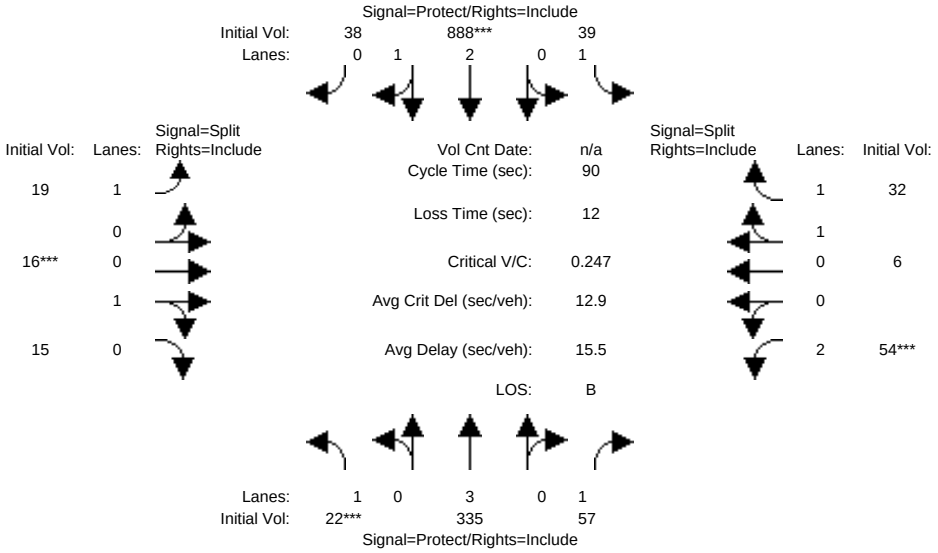

Approach:	North Bound			South Bound			East Bound			West Bound		
Movement:	L -	T -	R	L -	T -	R	L -	T -	R	L -	T -	R
Min. Green:	7	10	10	7	10	10	10	10	10	10	10	10
Y+R:	4.0	4.0	4.0	4.0	4.0	4.0	4.0	4.0	4.0	4.0	4.0	4.0
Volume Module:												
Base Vol:	22	335	57	39	888	38	19	16	15	54	6	32
Growth Adj:	1.00	1.00	1.00	1.00	1.00	1.00	1.00	1.00	1.00	1.00	1.00	1.00
Initial Bse:	22	335	57	39	888	38	19	16	15	54	6	32
Added Vol:	0	0	0	0	0	0	0	0	0	0	0	0
PasserByVol:	0	0	0	0	0	0	0	0	0	0	0	0
Initial Fut:	22	335	57	39	888	38	19	16	15	54	6	32
User Adj:	1.00	1.00	1.00	1.00	1.00	1.00	1.00	1.00	1.00	1.00	1.00	1.00
PHF Adj:	1.00	1.00	1.00	1.00	1.00	1.00	1.00	1.00	1.00	1.00	1.00	1.00
PHF Volume:	22	335	57	39	888	38	19	16	15	54	6	32
Reduct Vol:	0	0	0	0	0	0	0	0	0	0	0	0
Reduced Vol:	22	335	57	39	888	38	19	16	15	54	6	32
PCE Adj:	1.00	1.00	1.00	1.00	1.00	1.00	1.00	1.00	1.00	1.00	1.00	1.00
MLF Adj:	1.00	1.00	1.00	1.00	1.00	1.00	1.00	1.00	1.00	1.00	1.00	1.00
FinalVolume:	22	335	57	39	888	38	19	16	15	54	6	32
Saturation Flow Module:												
Sat/Lane:	1900	1900	1900	1900	1900	1900	1900	1900	1900	1900	1900	1900
Adjustment:	0.87	1.00	0.74	0.87	0.99	0.91	0.87	0.93	0.85	0.79	0.87	0.80
Lanes:	1.00	3.00	1.00	1.00	2.87	0.13	1.00	0.50	0.50	2.00	0.29	1.71
Final Sat.:	1663	5700	1406	1663	5414	232	1663	873	818	2993	487	2598
Capacity Analysis Module:												
Vol/Sat:	0.01	0.06	0.04	0.02	0.16	0.16	0.01	0.02	0.02	0.02	0.01	0.01
Crit Moves:	****				****			****		****		
Green/Cycle:	0.08	0.38	0.38	0.27	0.57	0.57	0.11	0.11	0.11	0.11	0.11	0.11
Volume/Cap:	0.17	0.16	0.11	0.09	0.29	0.29	0.10	0.16	0.16	0.16	0.11	0.11
Delay/Veh:	39.4	18.5	18.2	25.0	10.2	10.2	36.2	36.6	36.6	36.4	36.1	36.1
User DelAdj:	1.00	1.00	1.00	1.00	1.00	1.00	1.00	1.00	1.00	1.00	1.00	1.00
AdjDel/Veh:	39.4	18.5	18.2	25.0	10.2	10.2	36.2	36.6	36.6	36.4	36.1	36.1
LOS by Move:	D	B	B	C	B	B	D	D	D	D	D	D
HCM2kAvgQ:	1	2	1	1	4	4	1	1	1	1	1	1

Note: Queue reported is the number of cars per lane.

Milpitas Boulevard Extension Bridge

Level Of Service Computation Report
2000 HCM Operations (Future Volume Alternative)
Background PM

Intersection #1: CAPITOL AVE/MILPITAS BLVD

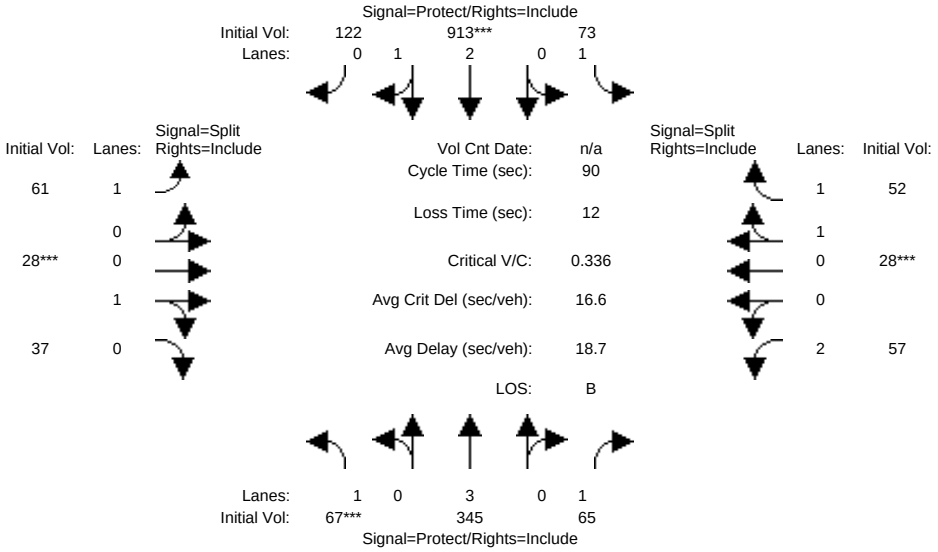

Approach:	North Bound			South Bound			East Bound			West Bound		
Movement:	L -	T -	R	L -	T -	R	L -	T -	R	L -	T -	R
Min. Green:	7	10	10	7	10	10	10	10	10	10	10	10
Y+R:	4.0	4.0	4.0	4.0	4.0	4.0	4.0	4.0	4.0	4.0	4.0	4.0
Volume Module:												
Base Vol:	67	345	65	73	913	122	61	28	37	57	28	52
Growth Adj:	1.00	1.00	1.00	1.00	1.00	1.00	1.00	1.00	1.00	1.00	1.00	1.00
Initial Bse:	67	345	65	73	913	122	61	28	37	57	28	52
Added Vol:	0	0	0	0	0	0	0	0	0	0	0	0
PasserByVol:	0	0	0	0	0	0	0	0	0	0	0	0
Initial Fut:	67	345	65	73	913	122	61	28	37	57	28	52
User Adj:	1.00	1.00	1.00	1.00	1.00	1.00	1.00	1.00	1.00	1.00	1.00	1.00
PHF Adj:	1.00	1.00	1.00	1.00	1.00	1.00	1.00	1.00	1.00	1.00	1.00	1.00
PHF Volume:	67	345	65	73	913	122	61	28	37	57	28	52
Reduct Vol:	0	0	0	0	0	0	0	0	0	0	0	0
Reduced Vol:	67	345	65	73	913	122	61	28	37	57	28	52
PCE Adj:	1.00	1.00	1.00	1.00	1.00	1.00	1.00	1.00	1.00	1.00	1.00	1.00
MLF Adj:	1.00	1.00	1.00	1.00	1.00	1.00	1.00	1.00	1.00	1.00	1.00	1.00
FinalVolume:	67	345	65	73	913	122	61	28	37	57	28	52
Saturation Flow Module:												
Sat/Lane:	1900	1900	1900	1900	1900	1900	1900	1900	1900	1900	1900	1900
Adjustment:	0.87	1.00	0.78	0.87	0.98	0.90	0.87	0.92	0.84	0.79	0.90	0.83
Lanes:	1.00	3.00	1.00	1.00	2.62	0.38	1.00	0.41	0.59	2.00	0.66	1.34
Final Sat.:	1663	5700	1488	1663	4888	653	1663	714	944	2993	1138	2113
Capacity Analysis Module:												
Vol/Sat:	0.04	0.06	0.04	0.04	0.19	0.19	0.04	0.04	0.04	0.02	0.02	0.02
Crit Moves:	****				****			****			****	
Green/Cycle:	0.11	0.38	0.38	0.27	0.53	0.53	0.11	0.11	0.11	0.11	0.11	0.11
Volume/Cap:	0.35	0.16	0.12	0.17	0.35	0.35	0.33	0.35	0.35	0.17	0.22	0.22
Delay/Veh:	37.9	18.5	18.2	25.6	12.3	12.3	37.9	38.2	38.2	36.5	36.8	36.8
User DelAdj:	1.00	1.00	1.00	1.00	1.00	1.00	1.00	1.00	1.00	1.00	1.00	1.00
AdjDel/Veh:	37.9	18.5	18.2	25.6	12.3	12.3	37.9	38.2	38.2	36.5	36.8	36.8
LOS by Move:	D	B	B	C	B	B	D	D	D	D	D	D
HCM2kAvgQ:	2	2	1	2	6	6	2	2	2	1	1	1

Note: Queue reported is the number of cars per lane.

Milpitas Boulevard Extension Bridge

Level Of Service Computation Report
2000 HCM Operations (Future Volume Alternative)
Background + Project PM

Intersection #1: CAPITOL AVE/MILPITAS BLVD

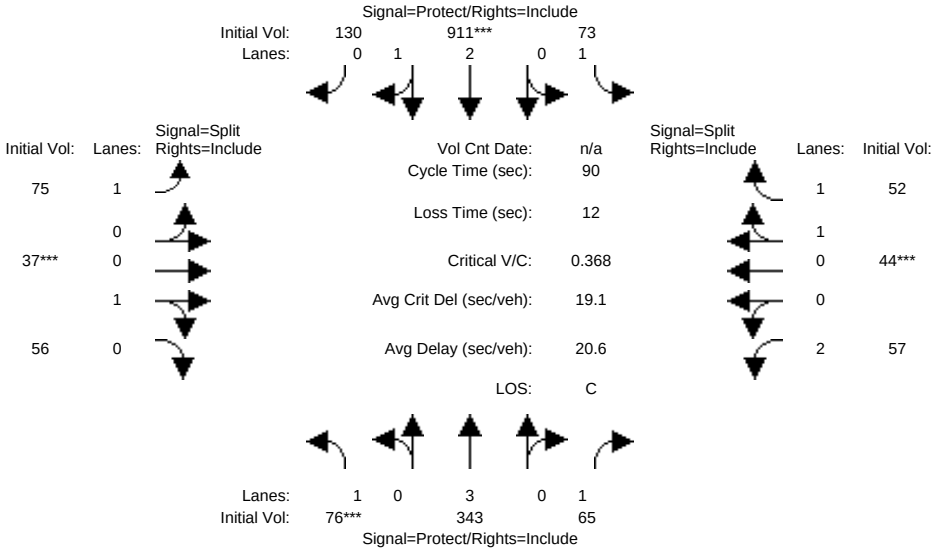

Approach:	North Bound			South Bound			East Bound			West Bound		
Movement:	L -	T -	R	L -	T -	R	L -	T -	R	L -	T -	R
Min. Green:	7	10	10	7	10	10	10	10	10	10	10	10
Y+R:	4.0	4.0	4.0	4.0	4.0	4.0	4.0	4.0	4.0	4.0	4.0	4.0
Volume Module:												
Base Vol:	76	343	65	73	911	130	75	37	56	57	44	52
Growth Adj:	1.00	1.00	1.00	1.00	1.00	1.00	1.00	1.00	1.00	1.00	1.00	1.00
Initial Bse:	76	343	65	73	911	130	75	37	56	57	44	52
Added Vol:	0	0	0	0	0	0	0	0	0	0	0	0
PasserByVol:	0	0	0	0	0	0	0	0	0	0	0	0
Initial Fut:	76	343	65	73	911	130	75	37	56	57	44	52
User Adj:	1.00	1.00	1.00	1.00	1.00	1.00	1.00	1.00	1.00	1.00	1.00	1.00
PHF Adj:	1.00	1.00	1.00	1.00	1.00	1.00	1.00	1.00	1.00	1.00	1.00	1.00
PHF Volume:	76	343	65	73	911	130	75	37	56	57	44	52
Reduct Vol:	0	0	0	0	0	0	0	0	0	0	0	0
Reduced Vol:	76	343	65	73	911	130	75	37	56	57	44	52
PCE Adj:	1.00	1.00	1.00	1.00	1.00	1.00	1.00	1.00	1.00	1.00	1.00	1.00
MLF Adj:	1.00	1.00	1.00	1.00	1.00	1.00	1.00	1.00	1.00	1.00	1.00	1.00
FinalVolume:	76	343	65	73	911	130	75	37	56	57	44	52
Saturation Flow Module:												
Sat/Lane:	1900	1900	1900	1900	1900	1900	1900	1900	1900	1900	1900	1900
Adjustment:	0.87	1.00	0.78	0.87	0.98	0.90	0.87	0.91	0.84	0.79	0.92	0.85
Lanes:	1.00	3.00	1.00	1.00	2.60	0.40	1.00	0.38	0.62	2.00	0.88	1.12
Final Sat.:	1663	5700	1488	1663	4842	691	1663	654	990	2993	1530	1808
Capacity Analysis Module:												
Vol/Sat:	0.05	0.06	0.04	0.04	0.19	0.19	0.05	0.06	0.06	0.02	0.03	0.03
Crit Moves:	****				****			****			****	
Green/Cycle:	0.12	0.36	0.36	0.25	0.49	0.49	0.15	0.15	0.15	0.11	0.11	0.11
Volume/Cap:	0.38	0.17	0.12	0.18	0.38	0.38	0.31	0.38	0.38	0.17	0.26	0.26
Delay/Veh:	37.9	19.8	19.5	26.6	14.5	14.5	35.0	35.7	35.7	36.5	37.0	37.0
User DelAdj:	1.00	1.00	1.00	1.00	1.00	1.00	1.00	1.00	1.00	1.00	1.00	1.00
AdjDel/Veh:	37.9	19.8	19.5	26.6	14.5	14.5	35.0	35.7	35.7	36.5	37.0	37.0
LOS by Move:	D	B	B	C	B	B	C	D	D	D	D	D
HCM2kAvgQ:	3	2	1	2	6	6	2	3	3	1	1	1

Note: Queue reported is the number of cars per lane.

Milpitas Boulevard Extension Bridge

Level Of Service Computation Report
2000 HCM Operations (Future Volume Alternative)
Existing PM

Intersection #2: LUNDY/TRADE ZONE

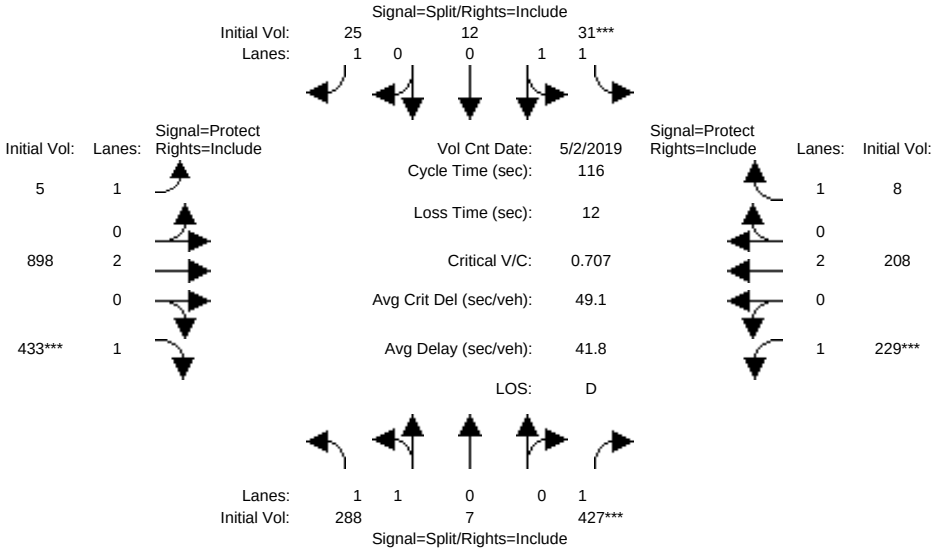

Approach:	North Bound			South Bound			East Bound			West Bound		
Movement:	L -	T -	R	L -	T -	R	L -	T -	R	L -	T -	R
Min. Green:	10	10	10	10	10	10	7	10	10	7	10	10
Y+R:	4.0	4.0	4.0	4.0	4.0	4.0	4.0	4.0	4.0	4.0	4.0	4.0
Volume Module: >> Count Date: 2 May 2019 << 4:50-5:50												
Base Vol:	288	7	427	31	12	25	5	898	433	229	208	8
Growth Adj:	1.00	1.00	1.00	1.00	1.00	1.00	1.00	1.00	1.00	1.00	1.00	1.00
Initial Bse:	288	7	427	31	12	25	5	898	433	229	208	8
Added Vol:	0	0	0	0	0	0	0	0	0	0	0	0
PasserByVol:	0	0	0	0	0	0	0	0	0	0	0	0
Initial Fut:	288	7	427	31	12	25	5	898	433	229	208	8
User Adj:	1.00	1.00	1.00	1.00	1.00	1.00	1.00	1.00	1.00	1.00	1.00	1.00
PHF Adj:	1.00	1.00	1.00	1.00	1.00	1.00	1.00	1.00	1.00	1.00	1.00	1.00
PHF Volume:	288	7	427	31	12	25	5	898	433	229	208	8
Reduct Vol:	0	0	0	0	0	0	0	0	0	0	0	0
Reduced Vol:	288	7	427	31	12	25	5	898	433	229	208	8
PCE Adj:	1.00	1.00	1.00	1.00	1.00	1.00	1.00	1.00	1.00	1.00	1.00	1.00
MLF Adj:	1.00	1.00	1.00	1.00	1.00	1.00	1.00	1.00	1.00	1.00	1.00	1.00
FinalVolume:	288	7	427	31	12	25	5	898	433	229	208	8
Saturation Flow Module:												
Sat/Lane:	1900	1900	1900	1900	1900	1900	1900	1900	1900	1900	1900	1900
Adjustment:	0.92	1.00	0.92	0.92	1.00	0.92	0.92	1.00	0.92	0.92	1.00	0.92
Lanes:	1.96	0.04	1.00	1.47	0.53	1.00	1.00	2.00	1.00	1.00	2.00	1.00
Final Sat.:	3423	83	1750	2580	999	1750	1750	3800	1750	1750	3800	1750
Capacity Analysis Module:												
Vol/Sat:	0.08	0.08	0.24	0.01	0.01	0.01	0.00	0.24	0.25	0.13	0.05	0.00
Crit Moves:			****	****					****	****		
Green/Cycle:	0.32	0.32	0.32	0.09	0.09	0.09	0.20	0.32	0.32	0.17	0.29	0.29
Volume/Cap:	0.26	0.26	0.77	0.14	0.14	0.17	0.01	0.73	0.77	0.77	0.19	0.02
Delay/Veh:	30.1	30.1	45.5	50.0	50.0	51.5	37.0	38.8	45.1	63.1	31.3	29.4
User DelAdj:	1.00	1.00	1.00	1.00	1.00	1.00	1.00	1.00	1.00	1.00	1.00	1.00
AdjDel/Veh:	30.1	30.1	45.5	50.0	50.0	51.5	37.0	38.8	45.1	63.1	31.3	29.4
LOS by Move:	C	C	D	D	D	D	D	D	D	E	C	C
HCM2kAvgQ:	4	4	16	1	1	1	0	15	16	10	3	0

Note: Queue reported is the number of cars per lane.

Milpitas Boulevard Extension Bridge

Level Of Service Computation Report
2000 HCM Operations (Future Volume Alternative)
Background PM

Intersection #2: LUNDY/TRADE ZONE

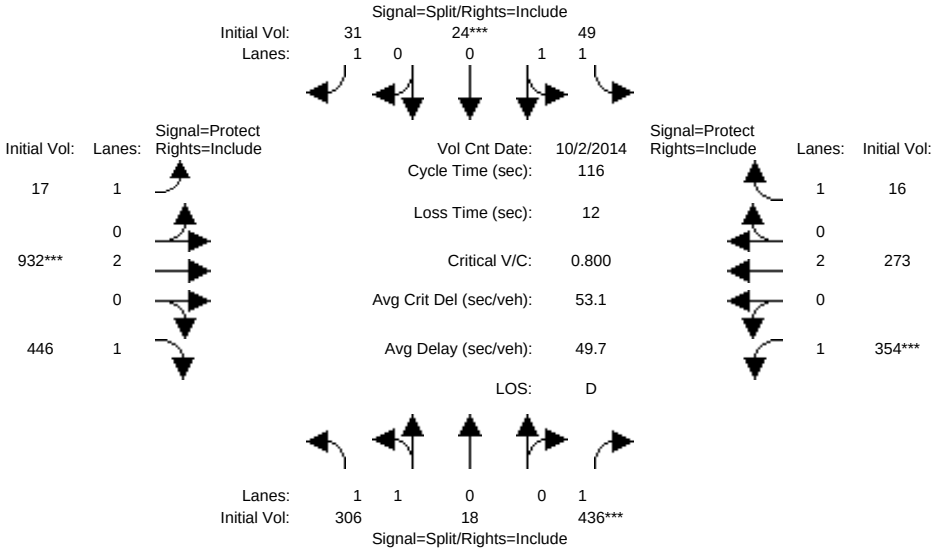

Approach:	North Bound			South Bound			East Bound			West Bound		
Movement:	L -	T -	R	L -	T -	R	L -	T -	R	L -	T -	R
Min. Green:	10	10	10	10	10	10	7	10	10	7	10	10
Y+R:	4.0	4.0	4.0	4.0	4.0	4.0	4.0	4.0	4.0	4.0	4.0	4.0
Volume Module: >> Count Date: 2 Oct 2014 << 4:50-5:50												
Base Vol:	306	18	436	49	24	31	17	932	446	354	273	16
Growth Adj:	1.00	1.00	1.00	1.00	1.00	1.00	1.00	1.00	1.00	1.00	1.00	1.00
Initial Bse:	306	18	436	49	24	31	17	932	446	354	273	16
Added Vol:	0	0	0	0	0	0	0	0	0	0	0	0
PasserByVol:	0	0	0	0	0	0	0	0	0	0	0	0
Initial Fut:	306	18	436	49	24	31	17	932	446	354	273	16
User Adj:	1.00	1.00	1.00	1.00	1.00	1.00	1.00	1.00	1.00	1.00	1.00	1.00
PHF Adj:	1.00	1.00	1.00	1.00	1.00	1.00	1.00	1.00	1.00	1.00	1.00	1.00
PHF Volume:	306	18	436	49	24	31	17	932	446	354	273	16
Reduct Vol:	0	0	0	0	0	0	0	0	0	0	0	0
Reduced Vol:	306	18	436	49	24	31	17	932	446	354	273	16
PCE Adj:	1.00	1.00	1.00	1.00	1.00	1.00	1.00	1.00	1.00	1.00	1.00	1.00
MLF Adj:	1.00	1.00	1.00	1.00	1.00	1.00	1.00	1.00	1.00	1.00	1.00	1.00
FinalVolume:	306	18	436	49	24	31	17	932	446	354	273	16
Saturation Flow Module:												
Sat/Lane:	1900	1900	1900	1900	1900	1900	1900	1900	1900	1900	1900	1900
Adjustment:	0.92	1.00	0.92	0.92	1.00	0.92	0.92	1.00	0.92	0.92	1.00	0.92
Lanes:	1.90	0.10	1.00	1.38	0.62	1.00	1.00	2.00	1.00	1.00	2.00	1.00
Final Sat.:	3320	195	1750	2412	1181	1750	1750	3800	1750	1750	3800	1750
Capacity Analysis Module:												
Vol/Sat:	0.09	0.09	0.25	0.02	0.02	0.02	0.01	0.25	0.25	0.20	0.07	0.01
Crit Moves:			****		****			****		****		
Green/Cycle:	0.29	0.29	0.29	0.09	0.09	0.09	0.21	0.29	0.29	0.24	0.31	0.31
Volume/Cap:	0.32	0.32	0.86	0.24	0.24	0.21	0.05	0.86	0.89	0.86	0.23	0.03
Delay/Veh:	33.0	33.0	56.1	51.2	51.2	52.4	36.4	48.2	60.8	62.8	30.6	28.3
User DelAdj:	1.00	1.00	1.00	1.00	1.00	1.00	1.00	1.00	1.00	1.00	1.00	1.00
AdjDel/Veh:	33.0	33.0	56.1	51.2	51.2	52.4	36.4	48.2	60.8	62.8	30.6	28.3
LOS by Move:	C	C	E	D	D	D	D	D	E	E	C	C
HCM2kAvgQ:	5	5	19	1	1	1	1	18	20	16	4	0

Note: Queue reported is the number of cars per lane.

Milpitas Boulevard Extension Bridge

Level Of Service Computation Report
2000 HCM Operations (Future Volume Alternative)
Background + Project PM

Intersection #2: LUNDY/TRADE ZONE

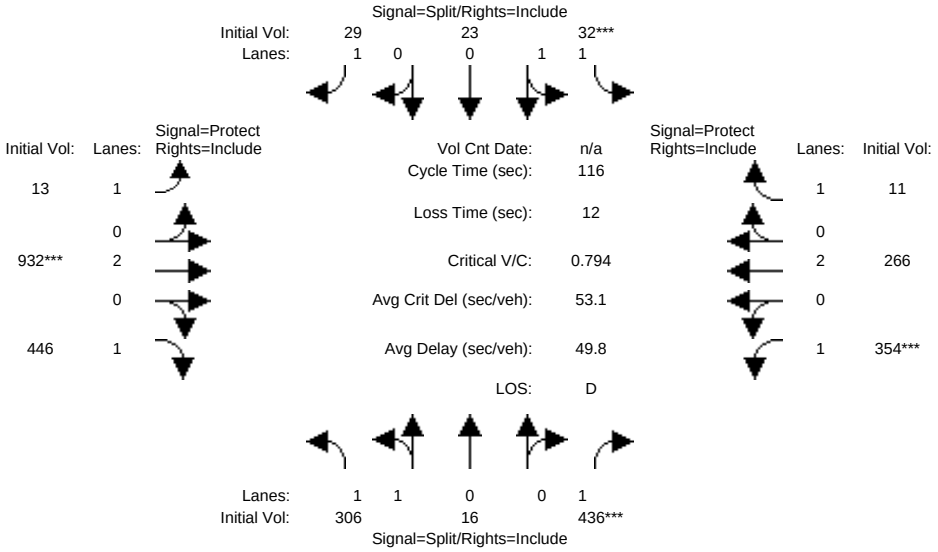

Approach:	North Bound			South Bound			East Bound			West Bound		
Movement:	L -	T -	R	L -	T -	R	L -	T -	R	L -	T -	R
Min. Green:	10	10	10	10	10	10	7	10	10	7	10	10
Y+R:	4.0	4.0	4.0	4.0	4.0	4.0	4.0	4.0	4.0	4.0	4.0	4.0
Volume Module:												
Base Vol:	306	16	436	32	23	29	13	932	446	354	266	11
Growth Adj:	1.00	1.00	1.00	1.00	1.00	1.00	1.00	1.00	1.00	1.00	1.00	1.00
Initial Bse:	306	16	436	32	23	29	13	932	446	354	266	11
Added Vol:	0	0	0	0	0	0	0	0	0	0	0	0
PasserByVol:	0	0	0	0	0	0	0	0	0	0	0	0
Initial Fut:	306	16	436	32	23	29	13	932	446	354	266	11
User Adj:	1.00	1.00	1.00	1.00	1.00	1.00	1.00	1.00	1.00	1.00	1.00	1.00
PHF Adj:	1.00	1.00	1.00	1.00	1.00	1.00	1.00	1.00	1.00	1.00	1.00	1.00
PHF Volume:	306	16	436	32	23	29	13	932	446	354	266	11
Reduct Vol:	0	0	0	0	0	0	0	0	0	0	0	0
Reduced Vol:	306	16	436	32	23	29	13	932	446	354	266	11
PCE Adj:	1.00	1.00	1.00	1.00	1.00	1.00	1.00	1.00	1.00	1.00	1.00	1.00
MLF Adj:	1.00	1.00	1.00	1.00	1.00	1.00	1.00	1.00	1.00	1.00	1.00	1.00
FinalVolume:	306	16	436	32	23	29	13	932	446	354	266	11
Saturation Flow Module:												
Sat/Lane:	1900	1900	1900	1900	1900	1900	1900	1900	1900	1900	1900	1900
Adjustment:	0.92	1.00	0.92	0.92	1.00	0.92	0.92	1.00	0.92	0.92	1.00	0.92
Lanes:	1.91	0.09	1.00	1.20	0.80	1.00	1.00	2.00	1.00	1.00	2.00	1.00
Final Sat.:	3339	175	1750	2106	1514	1750	1750	3800	1750	1750	3800	1750
Capacity Analysis Module:												
Vol/Sat:	0.09	0.09	0.25	0.02	0.02	0.02	0.01	0.25	0.25	0.20	0.07	0.01
Crit Moves:			****	****				****		****		
Green/Cycle:	0.29	0.29	0.29	0.09	0.09	0.09	0.21	0.29	0.29	0.24	0.31	0.31
Volume/Cap:	0.32	0.32	0.86	0.18	0.18	0.19	0.03	0.86	0.89	0.86	0.23	0.02
Delay/Veh:	33.0	33.0	56.1	50.4	50.4	52.1	36.2	48.2	60.8	62.8	30.5	28.2
User DelAdj:	1.00	1.00	1.00	1.00	1.00	1.00	1.00	1.00	1.00	1.00	1.00	1.00
AdjDel/Veh:	33.0	33.0	56.1	50.4	50.4	52.1	36.2	48.2	60.8	62.8	30.5	28.2
LOS by Move:	C	C	E	D	D	D	D	D	E	E	C	C
HCM2kAvgQ:	5	5	19	1	1	1	0	18	20	16	3	0

Note: Queue reported is the number of cars per lane.

Milpitas Boulevard Extension Bridge

Level Of Service Computation Report
2000 HCM Operations (Future Volume Alternative)
Existing PM

Intersection #3: MONTAGUE EXPWY/TRADE ZONE BLVD

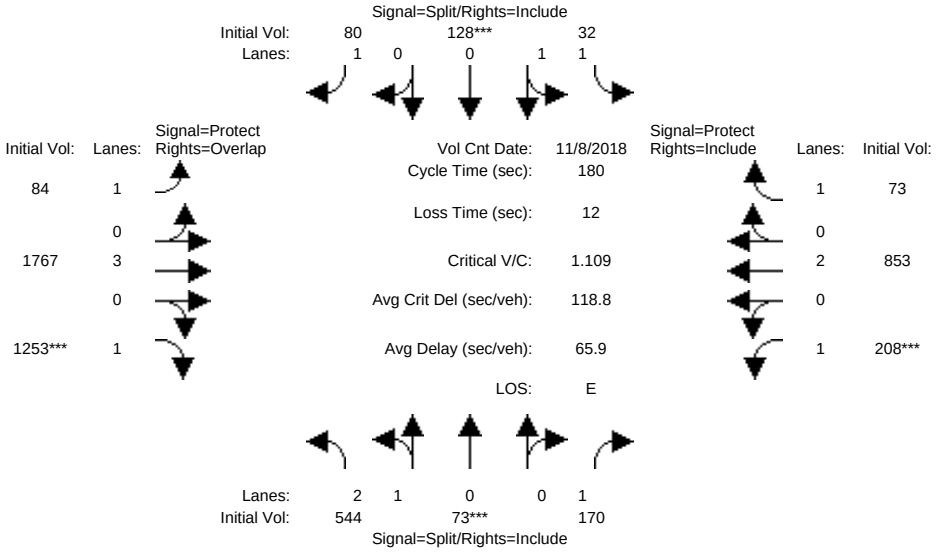

Street Name:	Trade Zone Blvd						Montague Expressway					
Approach:	North Bound			South Bound			East Bound			West Bound		
Movement:	L -	T -	R	L -	T -	R	L -	T -	R	L -	T -	R
Min. Green:	10	10	10	10	10	10	7	100	10	7	107	10
Y+R:	4.0	4.0	4.0	4.0	4.0	4.0	4.0	4.0	4.0	4.0	4.0	4.0
Volume Module: >> Count Date: 8 Nov 2018 << 5:00 - 6:00 PM												
Base Vol:	544	73	170	32	128	80	84	1767	1253	208	853	73
Growth Adj:	1.00	1.00	1.00	1.00	1.00	1.00	1.00	1.00	1.00	1.00	1.00	1.00
Initial Bse:	544	73	170	32	128	80	84	1767	1253	208	853	73
Added Vol:	0	0	0	0	0	0	0	0	0	0	0	0
PasserByVol:	0	0	0	0	0	0	0	0	0	0	0	0
Initial Fut:	544	73	170	32	128	80	84	1767	1253	208	853	73
User Adj:	1.00	1.00	1.00	1.00	1.00	1.00	1.00	1.00	1.00	1.00	1.00	1.00
PHF Adj:	1.00	1.00	1.00	1.00	1.00	1.00	1.00	1.00	1.00	1.00	1.00	1.00
PHF Volume:	544	73	170	32	128	80	84	1767	1253	208	853	73
Reduct Vol:	0	0	0	0	0	0	0	0	0	0	0	0
Reduced Vol:	544	73	170	32	128	80	84	1767	1253	208	853	73
PCE Adj:	1.00	1.00	1.00	1.00	1.00	1.00	1.00	1.00	1.00	1.00	1.00	1.00
MLF Adj:	1.00	1.00	1.00	1.00	1.00	1.00	1.00	1.00	1.00	1.00	1.00	1.00
FinalVolume:	544	73	170	32	128	80	84	1767	1253	208	853	73
Saturation Flow Module:												
Sat/Lane:	1900	1900	1900	1900	1900	1900	1900	1900	1900	1900	1900	1900
Adjustment:	0.79	0.96	0.78	0.91	0.99	0.78	0.87	1.00	0.78	0.87	1.00	0.78
Lanes:	2.70	0.30	1.00	1.00	1.00	1.00	1.00	3.00	1.00	1.00	2.00	1.00
Final Sat.:	4073	547	1488	1733	1881	1488	1663	5700	1488	1663	3800	1488
Capacity Analysis Module:												
Vol/Sat:	0.13	0.13	0.11	0.02	0.07	0.05	0.05	0.31	0.84	0.13	0.22	0.05
Crit Moves:		****			****				****	****		
Green/Cycle:	0.12	0.12	0.12	0.06	0.06	0.06	0.06	0.64	0.76	0.11	0.69	0.69
Volume/Cap:	1.11	1.11	0.95	0.30	1.11	0.88	0.86	0.49	1.11	1.11	0.32	0.07
Delay/Veh:	150.9	151	131.1	81.1	192	139.9	132.7	17.1	83.8	178.0	11.0	9.0
User DelAdj:	1.00	1.00	1.00	1.00	1.00	1.00	1.00	1.00	1.00	1.00	1.00	1.00
AdjDel/Veh:	150.9	151	131.1	81.1	192	139.9	132.7	17.1	83.8	178.0	11.0	9.0
LOS by Move:	F	F	F	F	F	F	F	B	F	F	B	A
HCM2kAvgQ:	19	19	13	2	11	7	7	16	92	18	9	1

Note: Queue reported is the number of cars per lane.

Milpitas Boulevard Extension Bridge

Level Of Service Computation Report
2000 HCM Operations (Future Volume Alternative)
Background PM

Intersection #3: MONTAGUE EXPWY/TRADE ZONE BLVD

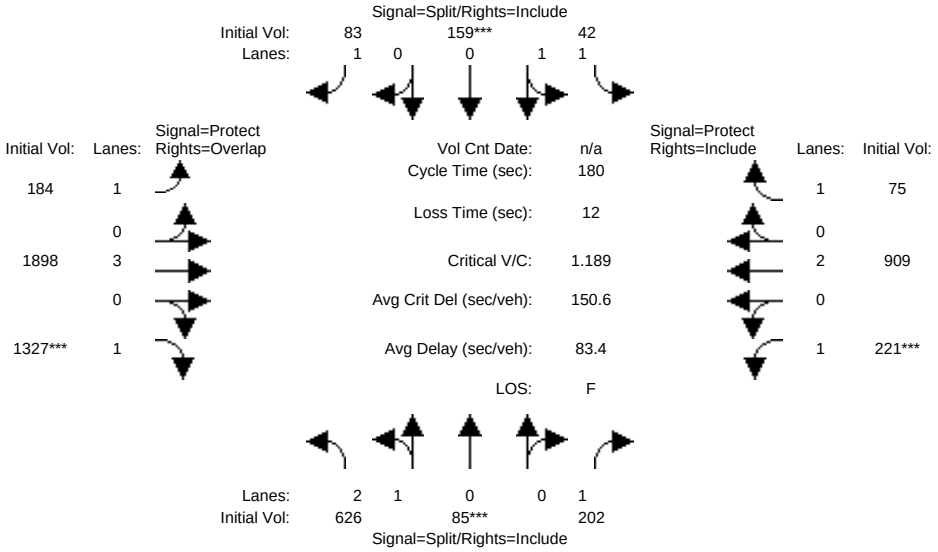

Street Name:	Trade Zone Blvd						Montague Expressway					
Approach:	North Bound			South Bound			East Bound			West Bound		
Movement:	L -	T -	R	L -	T -	R	L -	T -	R	L -	T -	R
Min. Green:	10	10	10	10	10	10	7	100	10	7	107	10
Y+R:	4.0	4.0	4.0	4.0	4.0	4.0	4.0	4.0	4.0	4.0	4.0	4.0
Volume Module:												
Base Vol:	626	85	202	42	159	83	184	1898	1327	221	909	75
Growth Adj:	1.00	1.00	1.00	1.00	1.00	1.00	1.00	1.00	1.00	1.00	1.00	1.00
Initial Bse:	626	85	202	42	159	83	184	1898	1327	221	909	75
Added Vol:	0	0	0	0	0	0	0	0	0	0	0	0
PasserByVol:	0	0	0	0	0	0	0	0	0	0	0	0
Initial Fut:	626	85	202	42	159	83	184	1898	1327	221	909	75
User Adj:	1.00	1.00	1.00	1.00	1.00	1.00	1.00	1.00	1.00	1.00	1.00	1.00
PHF Adj:	1.00	1.00	1.00	1.00	1.00	1.00	1.00	1.00	1.00	1.00	1.00	1.00
PHF Volume:	626	85	202	42	159	83	184	1898	1327	221	909	75
Reduct Vol:	0	0	0	0	0	0	0	0	0	0	0	0
Reduced Vol:	626	85	202	42	159	83	184	1898	1327	221	909	75
PCE Adj:	1.00	1.00	1.00	1.00	1.00	1.00	1.00	1.00	1.00	1.00	1.00	1.00
MLF Adj:	1.00	1.00	1.00	1.00	1.00	1.00	1.00	1.00	1.00	1.00	1.00	1.00
FinalVolume:	626	85	202	42	159	83	184	1898	1327	221	909	75
Saturation Flow Module:												
Sat/Lane:	1900	1900	1900	1900	1900	1900	1900	1900	1900	1900	1900	1900
Adjustment:	0.79	0.96	0.78	0.91	0.99	0.78	0.87	1.00	0.78	0.87	1.00	0.78
Lanes:	2.70	0.30	1.00	1.00	1.00	1.00	1.00	3.00	1.00	1.00	2.00	1.00
Final Sat.:	4069	552	1488	1733	1881	1488	1663	5700	1488	1663	3800	1488
Capacity Analysis Module:												
Vol/Sat:	0.15	0.15	0.14	0.02	0.08	0.06	0.11	0.33	0.89	0.13	0.24	0.05
Crit Moves:		****			****				****	****		
Green/Cycle:	0.13	0.13	0.13	0.07	0.07	0.07	0.12	0.62	0.75	0.11	0.62	0.62
Volume/Cap:	1.19	1.19	1.05	0.34	1.19	0.78	0.96	0.54	1.19	1.19	0.39	0.08
Delay/Veh:	179.3	179	156.8	79.9	213	113.2	133.2	19.5	116.6	206.0	17.4	13.9
User DelAdj:	1.00	1.00	1.00	1.00	1.00	1.00	1.00	1.00	1.00	1.00	1.00	1.00
AdjDel/Veh:	179.3	179	156.8	79.9	213	113.2	133.2	19.5	116.6	206.0	17.4	13.9
LOS by Move:	F	F	F	E	F	F	F	B	F	F	B	B
HCM2kAvgQ:	23	23	17	3	14	7	14	19	106	20	12	2

Note: Queue reported is the number of cars per lane.

Milpitas Boulevard Extension Bridge

Level Of Service Computation Report
2000 HCM Operations (Future Volume Alternative)
Background + Project PM

Intersection #3: MONTAGUE EXPWY/TRADE ZONE BLVD

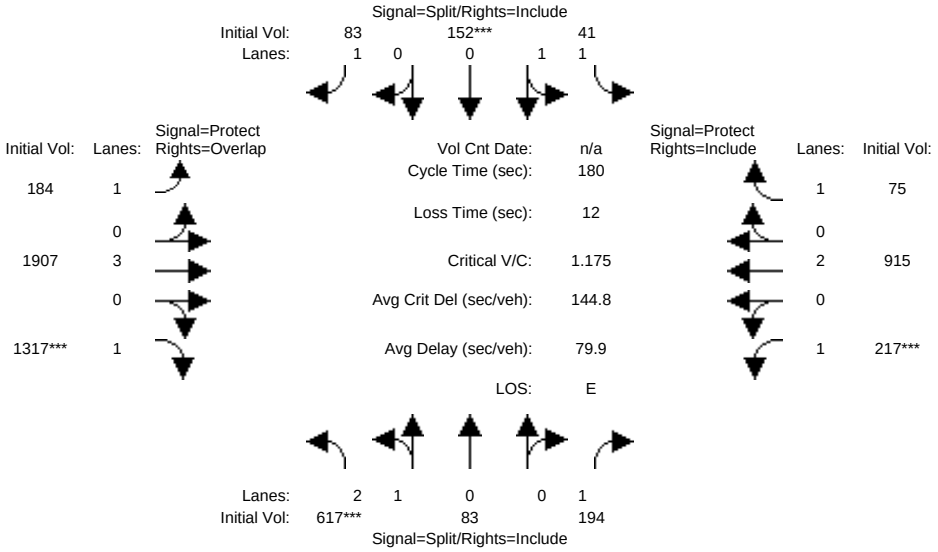

Street Name:	Trade Zone Blvd						Montague Expressway					
Approach:	North Bound			South Bound			East Bound			West Bound		
Movement:	L -	T -	R	L -	T -	R	L -	T -	R	L -	T -	R
Min. Green:	10	10	10	10	10	10	7	100	10	7	107	10
Y+R:	4.0	4.0	4.0	4.0	4.0	4.0	4.0	4.0	4.0	4.0	4.0	4.0
Volume Module:												
Base Vol:	617	83	194	41	152	83	184	1907	1317	217	915	75
Growth Adj:	1.00	1.00	1.00	1.00	1.00	1.00	1.00	1.00	1.00	1.00	1.00	1.00
Initial Bse:	617	83	194	41	152	83	184	1907	1317	217	915	75
Added Vol:	0	0	0	0	0	0	0	0	0	0	0	0
PasserByVol:	0	0	0	0	0	0	0	0	0	0	0	0
Initial Fut:	617	83	194	41	152	83	184	1907	1317	217	915	75
User Adj:	1.00	1.00	1.00	1.00	1.00	1.00	1.00	1.00	1.00	1.00	1.00	1.00
PHF Adj:	1.00	1.00	1.00	1.00	1.00	1.00	1.00	1.00	1.00	1.00	1.00	1.00
PHF Volume:	617	83	194	41	152	83	184	1907	1317	217	915	75
Reduct Vol:	0	0	0	0	0	0	0	0	0	0	0	0
Reduced Vol:	617	83	194	41	152	83	184	1907	1317	217	915	75
PCE Adj:	1.00	1.00	1.00	1.00	1.00	1.00	1.00	1.00	1.00	1.00	1.00	1.00
MLF Adj:	1.00	1.00	1.00	1.00	1.00	1.00	1.00	1.00	1.00	1.00	1.00	1.00
FinalVolume:	617	83	194	41	152	83	184	1907	1317	217	915	75
Saturation Flow Module:												
Sat/Lane:	1900	1900	1900	1900	1900	1900	1900	1900	1900	1900	1900	1900
Adjustment:	0.79	0.96	0.78	0.91	0.99	0.78	0.87	1.00	0.78	0.87	1.00	0.78
Lanes:	2.70	0.30	1.00	1.00	1.00	1.00	1.00	3.00	1.00	1.00	2.00	1.00
Final Sat.:	4072	548	1488	1733	1881	1488	1663	5700	1488	1663	3800	1488
Capacity Analysis Module:												
Vol/Sat:	0.15	0.15	0.13	0.02	0.08	0.06	0.11	0.33	0.89	0.13	0.24	0.05
Crit Moves:	****				****				****	****		
Green/Cycle:	0.13	0.13	0.13	0.07	0.07	0.07	0.12	0.62	0.75	0.11	0.62	0.62
Volume/Cap:	1.18	1.18	1.01	0.34	1.18	0.81	0.96	0.54	1.18	1.18	0.39	0.08
Delay/Veh:	173.9	174	146.4	80.3	209	119.5	132.0	19.2	110.6	201.3	17.2	13.7
User DelAdj:	1.00	1.00	1.00	1.00	1.00	1.00	1.00	1.00	1.00	1.00	1.00	1.00
AdjDel/Veh:	173.9	174	146.4	80.3	209	119.5	132.0	19.2	110.6	201.3	17.2	13.7
LOS by Move:	F	F	F	F	F	F	F	B	F	F	B	B
HCM2kAvgQ:	23	23	16	3	14	7	14	19	104	20	12	2

Note: Queue reported is the number of cars per lane.

Milpitas Boulevard Extension Bridge

Level Of Service Computation Report
2000 HCM Operations (Future Volume Alternative)
Existing PM

Intersection #4: MONTAGUE EXPWY/CAPITOL AVE

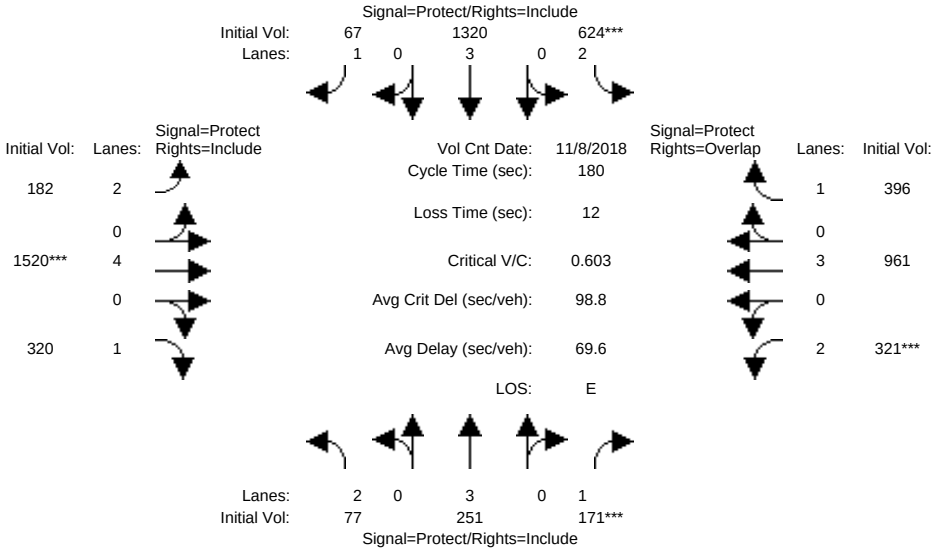

Approach:	North Bound			South Bound			East Bound			West Bound		
Movement:	L -	T -	R	L -	T -	R	L -	T -	R	L -	T -	R
Min. Green:	7	10	10	7	10	10	7	100	10	7	90	10
Y+R:	4.0	4.0	4.0	4.0	4.0	4.0	4.0	4.0	4.0	4.0	4.0	4.0

Volume Module: >> Count Date: 8 Nov 2018 << 5:00 - 6:00 PM

Base Vol:	77	251	171	624	1320	67	182	1520	320	321	961	396
Growth Adj:	1.00	1.00	1.00	1.00	1.00	1.00	1.00	1.00	1.00	1.00	1.00	1.00
Initial Bse:	77	251	171	624	1320	67	182	1520	320	321	961	396
Added Vol:	0	0	0	0	0	0	0	0	0	0	0	0
PasserByVol:	0	0	0	0	0	0	0	0	0	0	0	0
Initial Fut:	77	251	171	624	1320	67	182	1520	320	321	961	396
User Adj:	1.00	1.00	1.00	1.00	1.00	1.00	1.00	0.66	1.00	1.00	1.00	1.00
PHF Adj:	1.00	1.00	1.00	1.00	1.00	1.00	1.00	1.00	1.00	1.00	1.00	1.00
PHF Volume:	77	251	171	624	1320	67	182	1003	320	321	961	396
Reduct Vol:	0	0	0	0	0	0	0	0	0	0	0	0
Reduced Vol:	77	251	171	624	1320	67	182	1003	320	321	961	396
PCE Adj:	1.00	1.00	1.00	1.00	1.00	1.00	1.00	1.00	1.00	1.00	1.00	1.00
MLF Adj:	1.00	1.00	1.00	1.00	1.00	1.00	1.00	1.00	1.00	1.00	1.00	1.00
FinalVolume:	77	251	171	624	1320	67	182	1003	320	321	961	396

Saturation Flow Module:

Sat/Lane:	1900	1900	1900	1900	1900	1900	1900	1900	1900	1900	1900	1900
Adjustment:	0.79	1.00	0.78	0.79	1.00	0.78	0.79	1.00	0.78	0.79	1.00	0.78
Lanes:	2.00	3.00	1.00	2.00	3.00	1.00	2.00	4.00	1.00	2.00	3.00	1.00
Final Sat.:	2993	5700	1488	2993	5700	1488	2993	7600	1488	2993	5700	1488

Capacity Analysis Module:

Vol/Sat:	0.03	0.04	0.11	0.21	0.23	0.05	0.06	0.13	0.22	0.11	0.17	0.27
Crit Moves:			****	****				****		****		
Green/Cycle:	0.04	0.10	0.10	0.18	0.24	0.24	0.07	0.56	0.56	0.09	0.58	0.76
Volume/Cap:	0.63	0.44	1.14	1.14	0.95	0.19	0.86	0.24	0.39	1.14	0.29	0.35
Delay/Veh:	95.2	76.7	197.1	156.9	81.7	54.3	111.5	20.5	23.0	178.5	19.2	7.1
User DelAdj:	1.00	1.00	1.00	1.00	1.00	1.00	1.00	1.00	1.00	1.00	1.00	1.00
AdjDel/Veh:	95.2	76.7	197.1	156.9	81.7	54.3	111.5	20.5	23.0	178.5	19.2	7.1
LOS by Move:	F	E	F	F	F	D	F	C	C	F	B	A
HCM2kAvgQ:	4	5	16	29	28	3	8	7	10	16	9	8

Note: Queue reported is the number of cars per lane.

Milpitas Boulevard Extension Bridge

Level Of Service Computation Report
2000 HCM Operations (Future Volume Alternative)
Background PM

Intersection #4: MONTAGUE EXPWY/CAPITOL AVE

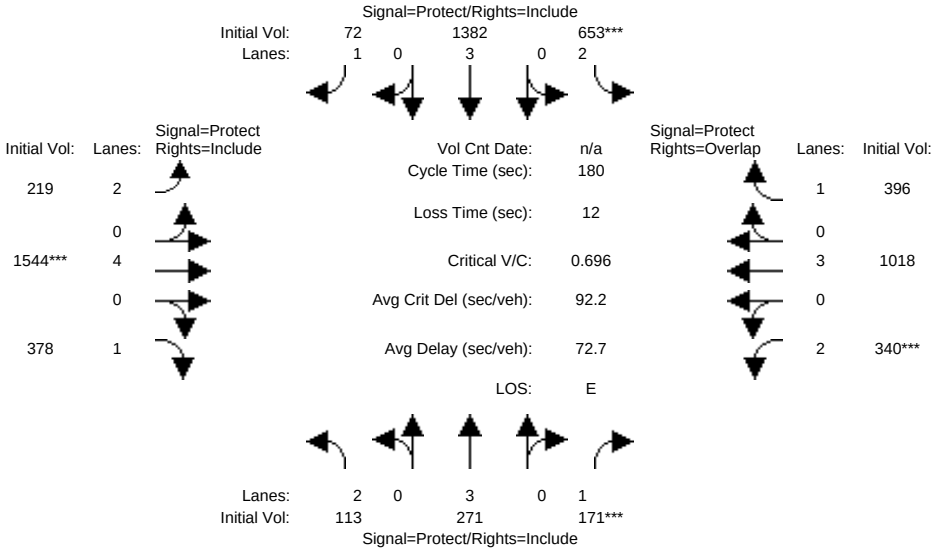

Approach:	North Bound			South Bound			East Bound			West Bound		
Movement:	L -	T -	R	L -	T -	R	L -	T -	R	L -	T -	R
Min. Green:	7	10	10	7	10	10	7	100	10	7	90	10
Y+R:	4.0	4.0	4.0	4.0	4.0	4.0	4.0	4.0	4.0	4.0	4.0	4.0
Volume Module:												
Base Vol:	113	271	171	653	1382	72	219	1544	378	340	1018	396
Growth Adj:	1.00	1.00	1.00	1.00	1.00	1.00	1.00	1.00	1.00	1.00	1.00	1.00
Initial Bse:	113	271	171	653	1382	72	219	1544	378	340	1018	396
Added Vol:	0	0	0	0	0	0	0	0	0	0	0	0
PasserByVol:	0	0	0	0	0	0	0	0	0	0	0	0
Initial Fut:	113	271	171	653	1382	72	219	1544	378	340	1018	396
User Adj:	1.00	1.00	1.00	1.00	1.00	1.00	1.00	1.00	1.00	1.00	1.00	1.00
PHF Adj:	1.00	1.00	1.00	1.00	1.00	1.00	1.00	1.00	1.00	1.00	1.00	1.00
PHF Volume:	113	271	171	653	1382	72	219	1544	378	340	1018	396
Reduct Vol:	0	0	0	0	0	0	0	0	0	0	0	0
Reduced Vol:	113	271	171	653	1382	72	219	1544	378	340	1018	396
PCE Adj:	1.00	1.00	1.00	1.00	1.00	1.00	1.00	1.00	1.00	1.00	1.00	1.00
MLF Adj:	1.00	1.00	1.00	1.00	1.00	1.00	1.00	1.00	1.00	1.00	1.00	1.00
FinalVolume:	113	271	171	653	1382	72	219	1544	378	340	1018	396
Saturation Flow Module:												
Sat/Lane:	1900	1900	1900	1900	1900	1900	1900	1900	1900	1900	1900	1900
Adjustment:	0.79	1.00	0.78	0.79	1.00	0.78	0.79	1.00	0.78	0.79	1.00	0.78
Lanes:	2.00	3.00	1.00	2.00	3.00	1.00	2.00	4.00	1.00	2.00	3.00	1.00
Final Sat.:	2993	5700	1488	2993	5700	1488	2993	7600	1488	2993	5700	1488
Capacity Analysis Module:												
Vol/Sat:	0.04	0.05	0.11	0.22	0.24	0.05	0.07	0.20	0.25	0.11	0.18	0.27
Crit Moves:			****	****				****		****		
Green/Cycle:	0.04	0.10	0.10	0.18	0.24	0.24	0.08	0.56	0.56	0.10	0.57	0.75
Volume/Cap:	0.97	0.49	1.18	1.18	1.00	0.20	0.88	0.37	0.46	1.18	0.31	0.35
Delay/Veh:	160.0	77.7	213.5	173.0	92.0	54.5	109.7	22.4	24.2	193.3	20.5	7.7
User DelAdj:	1.00	1.00	1.00	1.00	1.00	1.00	1.00	1.00	1.00	1.00	1.00	1.00
AdjDel/Veh:	160.0	77.7	213.5	173.0	92.0	54.5	109.7	22.4	24.2	193.3	20.5	7.7
LOS by Move:	F	E	F	F	F	D	F	C	C	F	C	A
HCM2kAvgQ:	6	5	16	31	31	3	10	11	13	18	9	8

Note: Queue reported is the number of cars per lane.

Milpitas Boulevard Extension Bridge

Level Of Service Computation Report
2000 HCM Operations (Future Volume Alternative)
Background + Project PM

Intersection #4: MONTAGUE EXPWY/CAPITOL AVE

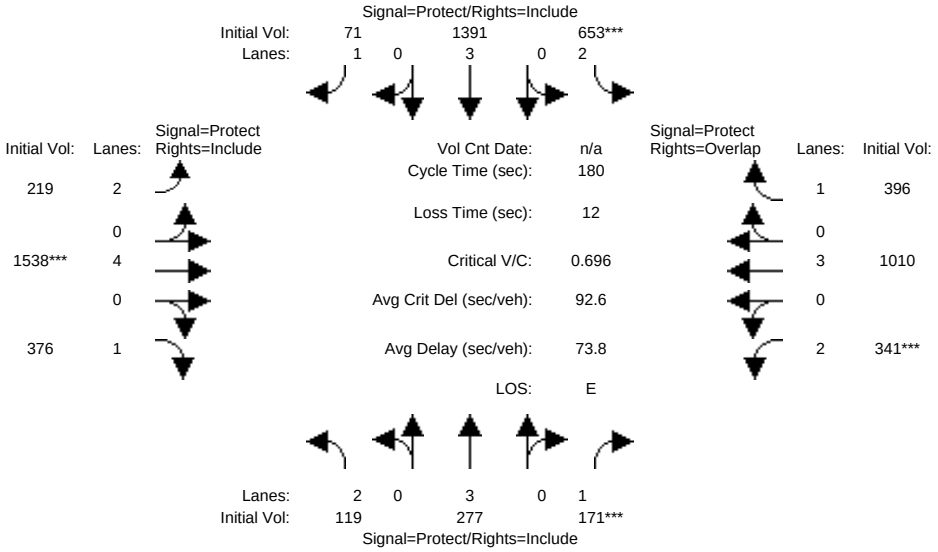

Approach:	North Bound			South Bound			East Bound			West Bound		
Movement:	L -	T -	R	L -	T -	R	L -	T -	R	L -	T -	R
Min. Green:	7	10	10	7	10	10	7	100	10	7	90	10
Y+R:	4.0	4.0	4.0	4.0	4.0	4.0	4.0	4.0	4.0	4.0	4.0	4.0
Volume Module:												
Base Vol:	119	277	171	653	1391	71	219	1538	376	341	1010	396
Growth Adj:	1.00	1.00	1.00	1.00	1.00	1.00	1.00	1.00	1.00	1.00	1.00	1.00
Initial Bse:	119	277	171	653	1391	71	219	1538	376	341	1010	396
Added Vol:	0	0	0	0	0	0	0	0	0	0	0	0
PasserByVol:	0	0	0	0	0	0	0	0	0	0	0	0
Initial Fut:	119	277	171	653	1391	71	219	1538	376	341	1010	396
User Adj:	1.00	1.00	1.00	1.00	1.00	1.00	1.00	1.00	1.00	1.00	1.00	1.00
PHF Adj:	1.00	1.00	1.00	1.00	1.00	1.00	1.00	1.00	1.00	1.00	1.00	1.00
PHF Volume:	119	277	171	653	1391	71	219	1538	376	341	1010	396
Reduct Vol:	0	0	0	0	0	0	0	0	0	0	0	0
Reduced Vol:	119	277	171	653	1391	71	219	1538	376	341	1010	396
PCE Adj:	1.00	1.00	1.00	1.00	1.00	1.00	1.00	1.00	1.00	1.00	1.00	1.00
MLF Adj:	1.00	1.00	1.00	1.00	1.00	1.00	1.00	1.00	1.00	1.00	1.00	1.00
FinalVolume:	119	277	171	653	1391	71	219	1538	376	341	1010	396
Saturation Flow Module:												
Sat/Lane:	1900	1900	1900	1900	1900	1900	1900	1900	1900	1900	1900	1900
Adjustment:	0.79	1.00	0.78	0.79	1.00	0.78	0.79	1.00	0.78	0.79	1.00	0.78
Lanes:	2.00	3.00	1.00	2.00	3.00	1.00	2.00	4.00	1.00	2.00	3.00	1.00
Final Sat.:	2993	5700	1488	2993	5700	1488	2993	7600	1488	2993	5700	1488
Capacity Analysis Module:												
Vol/Sat:	0.04	0.05	0.11	0.22	0.24	0.05	0.07	0.20	0.25	0.11	0.18	0.27
Crit Moves:			****	****				****		****		
Green/Cycle:	0.04	0.10	0.10	0.18	0.24	0.24	0.08	0.56	0.56	0.10	0.57	0.75
Volume/Cap:	1.01	0.50	1.18	1.18	1.01	0.20	0.88	0.36	0.45	1.18	0.31	0.35
Delay/Veh:	171.5	77.8	213.9	173.4	94.5	54.6	109.6	22.3	24.2	193.6	20.4	7.7
User DelAdj:	1.00	1.00	1.00	1.00	1.00	1.00	1.00	1.00	1.00	1.00	1.00	1.00
AdjDel/Veh:	171.5	77.8	213.9	173.4	94.5	54.6	109.6	22.3	24.2	193.6	20.4	7.7
LOS by Move:	F	E	F	F	F	D	F	C	C	F	C	A
HCM2kAvgQ:	7	5	16	31	31	3	10	11	13	18	9	8

Note: Queue reported is the number of cars per lane.

Milpitas Boulevard Extension Bridge

Level Of Service Computation Report
2000 HCM Unsignalized (Future Volume Alternative)
Existing PM

Intersection #5: Montague Expressway/Sango Ct

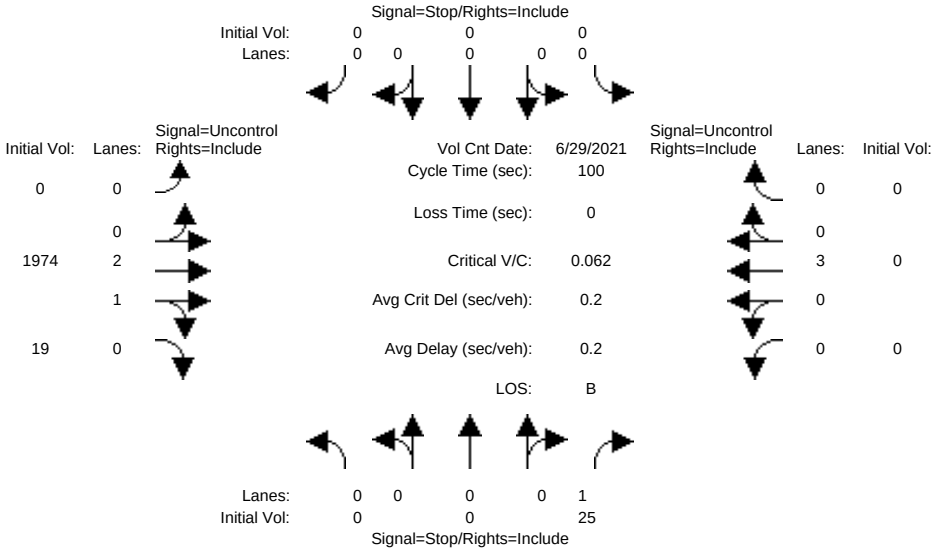


```
Street Name:             Sango Ct                    Montague Expressway
Approach:      North Bound      South Bound       East Bound       West Bound
Movement:     L  -  T  -  R    L  -  T  -  R    L  -  T  -  R    L  -  T  -  R
------------|---------------||---------------||---------------||---------------|
Volume Module: >> Count Date: 29 Jun 2021 <<
Base Vol:       0    0    25     0    0     0     0 1974    19     0    0     0
Growth Adj:  1.00 1.00  1.00  1.00 1.00  1.00  1.00 1.00  1.00  1.00 1.00  1.00
Initial Bse:    0    0    25     0    0     0     0 1974    19     0    0     0
Added Vol:      0    0     0     0    0     0     0    0     0     0    0     0
PasserByVol:    0    0     0     0    0     0     0    0     0     0    0     0
Initial Fut:    0    0    25     0    0     0     0 1974    19     0    0     0
User Adj:    1.00 1.00  1.00  1.00 1.00  1.00  1.00 1.00  1.00  1.00 1.00  1.00
PHF Adj:     1.00 1.00  1.00  1.00 1.00  1.00  1.00 1.00  1.00  1.00 1.00  1.00
PHF Volume:     0    0    25     0    0     0     0 1974    19     0    0     0
Reduct Vol:     0    0     0     0    0     0     0    0     0     0    0     0
FinalVolume:    0    0    25     0    0     0     0 1974    19     0    0     0
------------|---------------||---------------||---------------||---------------|
Critical Gap Module:
Critical Gp:xxxxx xxxx   6.9 xxxxx xxxx xxxxx xxxxx xxxx xxxxx xxxxx xxxx xxxxx
FollowUpTim:xxxxx xxxx   3.3 xxxxx xxxx xxxxx xxxxx xxxx xxxxx xxxxx xxxx xxxxx
------------|---------------||---------------||---------------||---------------|
Capacity Module:
Cnflict Vol: xxxx xxxx   668  xxxx xxxx xxxxx  xxxx xxxx xxxxx  xxxx xxxx xxxxx
Potent Cap.: xxxx xxxx   406  xxxx xxxx xxxxx  xxxx xxxx xxxxx  xxxx xxxx xxxxx
Move Cap.:   xxxx xxxx   406  xxxx xxxx xxxxx  xxxx xxxx xxxxx  xxxx xxxx xxxxx
Volume/Cap:  xxxx xxxx  0.06  xxxx xxxx  xxxx  xxxx xxxx  xxxx  xxxx xxxx  xxxx
------------|---------------||---------------||---------------||---------------|
Level Of Service Module:
2Way95thQ:   xxxx xxxx   0.2  xxxx xxxx xxxxx  xxxx xxxx xxxxx  xxxx xxxx xxxxx
Control Del:xxxxx xxxx  14.5 xxxxx xxxx xxxxx xxxxx xxxx xxxxx xxxxx xxxx xxxxx
LOS by Move:    *    *     B     *    *     *     *    *     *     *    *     *
Movement:     LT - LTR - RT    LT - LTR - RT    LT - LTR - RT    LT - LTR - RT
Shared Cap.: xxxx xxxx xxxxx  xxxx xxxx xxxxx  xxxx xxxx xxxxx  xxxx xxxx xxxxx
SharedQueue:xxxxx xxxx xxxxx xxxxx xxxx xxxxx xxxxx xxxx xxxxx xxxxx xxxx xxxxx
Shrd ConDel:xxxxx xxxx xxxxx xxxxx xxxx xxxxx xxxxx xxxx xxxxx xxxxx xxxx xxxxx
Shared LOS:     *    *     *     *    *     *     *    *     *     *    *     *
ApproachDel:      14.5           xxxxxx           xxxxxx           xxxxxx
ApproachLOS:         B                *                *                *
Note: Queue reported is the number of cars per lane.
                     Peak Hour Delay Signal Warrant Report
*******************************************************************************
Intersection #5 Montague Expressway/Sango Ct
*******************************************************************************
Future Volume Alternative: Peak Hour Warrant NOT Met
```

```
------------|---------------||---------------||---------------||---------------|
Approach:      North Bound      South Bound       East Bound       West Bound
Movement:     L  -  T  -  R    L  -  T  -  R    L  -  T  -  R    L  -  T  -  R
------------|---------------||---------------||---------------||---------------|
Control:        Stop Sign        Stop Sign       Uncontrolled     Uncontrolled
Lanes:        0  0  0  0  1    0  0  0  0  0    0  0  2  1  0    0  0  3  0  0
Initial Vol:    0    0    25     0    0     0     0 1974    19     0    0     0
ApproachDel:      14.5           xxxxxx           xxxxxx           xxxxxx
------------|---------------||---------------||---------------||---------------|
Approach[northbound][lanes=1][control=Stop Sign]
Signal Warrant Rule #1: [vehicle-hours=0.1]
   FAIL - Vehicle-hours less than 4 for one lane approach.
Signal Warrant Rule #2: [approach volume=25]
   FAIL - Approach volume less than 100 for one lane approach.
Signal Warrant Rule #3: [approach count=2][total volume=2018]
   SUCCEED - Total volume greater than or equal to 650 for intersection
             with less than four approaches.
--------------------------------------------------------------------------------
SIGNAL WARRANT DISCLAIMER
This peak hour signal warrant analysis should be considered solely as an
"indicator" of the likelihood of an unsignalized intersection warranting
a traffic signal in the future.  Intersections that exceed this warrant
are probably more likely to meet one or more of the other volume based
signal warrant (such as the 4-hour or 8-hour warrants).

The peak hour warrant analysis in this report is not intended to replace
a rigorous and complete traffic signal warrant analysis by the responsible
jurisdiction.  Consideration of the other signal warrants, which is beyond
the scope of this software, may yield different results.
                Peak Hour Volume Signal Warrant Report [Urban]
********************************************************************************
Intersection #5 Montague Expressway/Sango Ct
********************************************************************************
Future Volume Alternative: Peak Hour Warrant NOT Met
------------|---------------||---------------||---------------||---------------|
Approach:      North Bound      South Bound       East Bound       West Bound
Movement:     L  -  T  -  R    L  -  T  -  R    L  -  T  -  R    L  -  T  -  R
------------|---------------||---------------||---------------||---------------|
Control:        Stop Sign        Stop Sign       Uncontrolled     Uncontrolled
Lanes:        0  0  0  0  1    0  0  0  0  0    0  0  2  1  0    0  0  3  0  0
Initial Vol:    0    0    25     0    0     0     0 1974    19     0    0     0
------------|---------------||---------------||---------------||---------------|
Major Street Volume:             1993
Minor Approach Volume:           25
Minor Approach Volume Threshold: 47 [less than minimum of 100]
--------------------------------------------------------------------------------
SIGNAL WARRANT DISCLAIMER
This peak hour signal warrant analysis should be considered solely as an
"indicator" of the likelihood of an unsignalized intersection warranting
a traffic signal in the future.  Intersections that exceed this warrant
are probably more likely to meet one or more of the other volume based
signal warrant (such as the 4-hour or 8-hour warrants).

The peak hour warrant analysis in this report is not intended to replace
a rigorous and complete traffic signal warrant analysis by the responsible
jurisdiction.  Consideration of the other signal warrants, which is beyond
the scope of this software, may yield different results.
```

Milpitas Boulevard Extension Bridge

Level Of Service Computation Report
2000 HCM Unsignalized (Future Volume Alternative)
Background PM

Intersection #5: Montague Expressway/Sango Ct

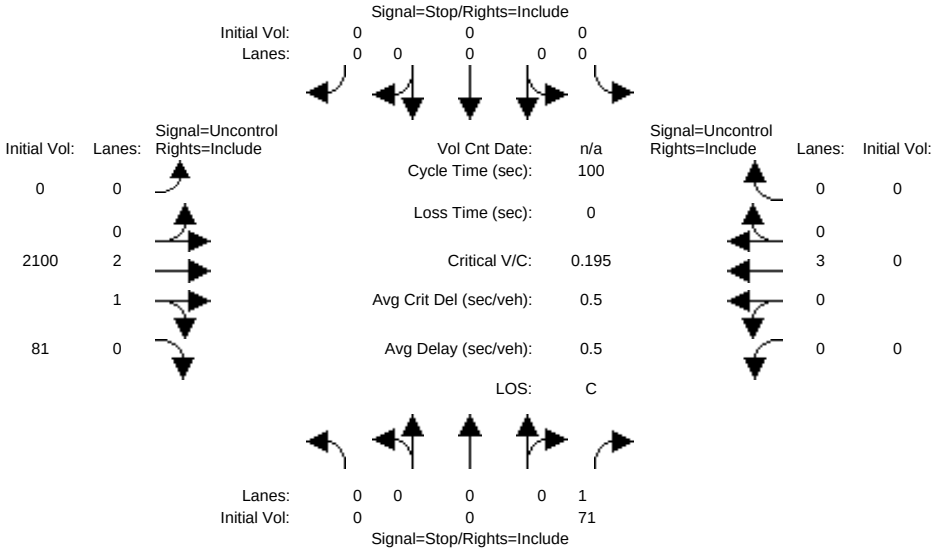


```
Street Name:              Sango Ct                     Montague Expressway
Approach:       North Bound      South Bound       East Bound       West Bound
Movement:      L  -  T  -  R    L  -  T  -  R    L  -  T  -  R    L  -  T  -  R
------------|---------------||---------------||---------------||---------------|
Volume Module:
Base Vol:       0    0    71     0    0     0     0 2100    81     0    0     0
Growth Adj:  1.00 1.00  1.00  1.00 1.00  1.00  1.00 1.00  1.00  1.00 1.00  1.00
Initial Bse:    0    0    71     0    0     0     0 2100    81     0    0     0
Added Vol:      0    0     0     0    0     0     0    0     0     0    0     0
PasserByVol:    0    0     0     0    0     0     0    0     0     0    0     0
Initial Fut:    0    0    71     0    0     0     0 2100    81     0    0     0
User Adj:    1.00 1.00  1.00  1.00 1.00  1.00  1.00 1.00  1.00  1.00 1.00  1.00
PHF Adj:     1.00 1.00  1.00  1.00 1.00  1.00  1.00 1.00  1.00  1.00 1.00  1.00
PHF Volume:     0    0    71     0    0     0     0 2100    81     0    0     0
Reduct Vol:     0    0     0     0    0     0     0    0     0     0    0     0
FinalVolume:    0    0    71     0    0     0     0 2100    81     0    0     0
------------|---------------||---------------||---------------||---------------|
Critical Gap Module:
Critical Gp:xxxxx xxxx   6.9 xxxxx xxxx xxxxx xxxxx xxxx xxxxx xxxxx xxxx xxxxx
FollowUpTim:xxxxx xxxx   3.3 xxxxx xxxx xxxxx xxxxx xxxx xxxxx xxxxx xxxx xxxxx
------------|---------------||---------------||---------------||---------------|
Capacity Module:
Cnflict Vol: xxxx xxxx   741  xxxx xxxx xxxxx  xxxx xxxx xxxxx  xxxx xxxx xxxxx
Potent Cap.: xxxx xxxx   363  xxxx xxxx xxxxx  xxxx xxxx xxxxx  xxxx xxxx xxxxx
Move Cap.:   xxxx xxxx   363  xxxx xxxx xxxxx  xxxx xxxx xxxxx  xxxx xxxx xxxxx
Volume/Cap:  xxxx xxxx  0.20  xxxx xxxx  xxxx  xxxx xxxx  xxxx  xxxx xxxx  xxxx
------------|---------------||---------------||---------------||---------------|
Level Of Service Module:
2Way95thQ:   xxxx xxxx   0.7  xxxx xxxx xxxxx  xxxx xxxx xxxxx  xxxx xxxx xxxxx
Control Del:xxxxx xxxx  17.3 xxxxx xxxx xxxxx xxxxx xxxx xxxxx xxxxx xxxx xxxxx
LOS by Move:    *    *     C     *    *     *     *    *     *     *    *     *
Movement:     LT - LTR - RT    LT - LTR - RT    LT - LTR - RT    LT - LTR - RT
Shared Cap.: xxxx xxxx xxxxx  xxxx xxxx xxxxx  xxxx xxxx xxxxx  xxxx xxxx xxxxx
SharedQueue:xxxxx xxxx xxxxx xxxxx xxxx xxxxx xxxxx xxxx xxxxx xxxxx xxxx xxxxx
Shrd ConDel:xxxxx xxxx xxxxx xxxxx xxxx xxxxx xxxxx xxxx xxxxx xxxxx xxxx xxxxx
Shared LOS:     *    *     *     *    *     *     *    *     *     *    *     *
ApproachDel:      17.3           xxxxxx           xxxxxx           xxxxxx
ApproachLOS:         C                 *                *                *
Note: Queue reported is the number of cars per lane.
                     Peak Hour Delay Signal Warrant Report
*******************************************************************************
Intersection #5 Montague Expressway/Sango Ct
*******************************************************************************
Future Volume Alternative: Peak Hour Warrant NOT Met
```

```
------------|---------------||---------------||---------------||---------------|
Approach:      North Bound      South Bound       East Bound       West Bound
Movement:     L  -  T  -  R    L  -  T  -  R    L  -  T  -  R    L  -  T  -  R
------------|---------------||---------------||---------------||---------------|
Control:        Stop Sign        Stop Sign       Uncontrolled     Uncontrolled
Lanes:        0  0  0  0  1    0  0  0  0  0    0  0  2  1  0    0  0  3  0  0
Initial Vol:    0    0    71     0    0     0     0 2100    81     0    0     0
ApproachDel:      17.3           xxxxxx           xxxxxx           xxxxxx
------------|---------------||---------------||---------------||---------------|
Approach[northbound][lanes=1][control=Stop Sign]
Signal Warrant Rule #1: [vehicle-hours=0.3]
   FAIL - Vehicle-hours less than 4 for one lane approach.
Signal Warrant Rule #2: [approach volume=71]
   FAIL - Approach volume less than 100 for one lane approach.
Signal Warrant Rule #3: [approach count=2][total volume=2252]
   SUCCEED - Total volume greater than or equal to 650 for intersection
             with less than four approaches.
--------------------------------------------------------------------------------
SIGNAL WARRANT DISCLAIMER
This peak hour signal warrant analysis should be considered solely as an
"indicator" of the likelihood of an unsignalized intersection warranting
a traffic signal in the future.  Intersections that exceed this warrant
are probably more likely to meet one or more of the other volume based
signal warrant (such as the 4-hour or 8-hour warrants).

The peak hour warrant analysis in this report is not intended to replace
a rigorous and complete traffic signal warrant analysis by the responsible
jurisdiction.  Consideration of the other signal warrants, which is beyond
the scope of this software, may yield different results.
                Peak Hour Volume Signal Warrant Report [Urban]
********************************************************************************
Intersection #5 Montague Expressway/Sango Ct
********************************************************************************
Future Volume Alternative: Peak Hour Warrant NOT Met
------------|---------------||---------------||---------------||---------------|
Approach:      North Bound      South Bound       East Bound       West Bound
Movement:     L  -  T  -  R    L  -  T  -  R    L  -  T  -  R    L  -  T  -  R
------------|---------------||---------------||---------------||---------------|
Control:        Stop Sign        Stop Sign       Uncontrolled     Uncontrolled
Lanes:        0  0  0  0  1    0  0  0  0  0    0  0  2  1  0    0  0  3  0  0
Initial Vol:    0    0    71     0    0     0     0 2100    81     0    0     0
------------|---------------||---------------||---------------||---------------|
Major Street Volume:             2181
Minor Approach Volume:           71
Minor Approach Volume Threshold: 16 [less than minimum of 100]
--------------------------------------------------------------------------------
SIGNAL WARRANT DISCLAIMER
This peak hour signal warrant analysis should be considered solely as an
"indicator" of the likelihood of an unsignalized intersection warranting
a traffic signal in the future.  Intersections that exceed this warrant
are probably more likely to meet one or more of the other volume based
signal warrant (such as the 4-hour or 8-hour warrants).

The peak hour warrant analysis in this report is not intended to replace
a rigorous and complete traffic signal warrant analysis by the responsible
jurisdiction.  Consideration of the other signal warrants, which is beyond
the scope of this software, may yield different results.
```

Milpitas Boulevard Extension Bridge

Level Of Service Computation Report
2000 HCM Unsignalized (Future Volume Alternative)
Background + Project PM

Intersection #5: Montague Expressway/Sango Ct

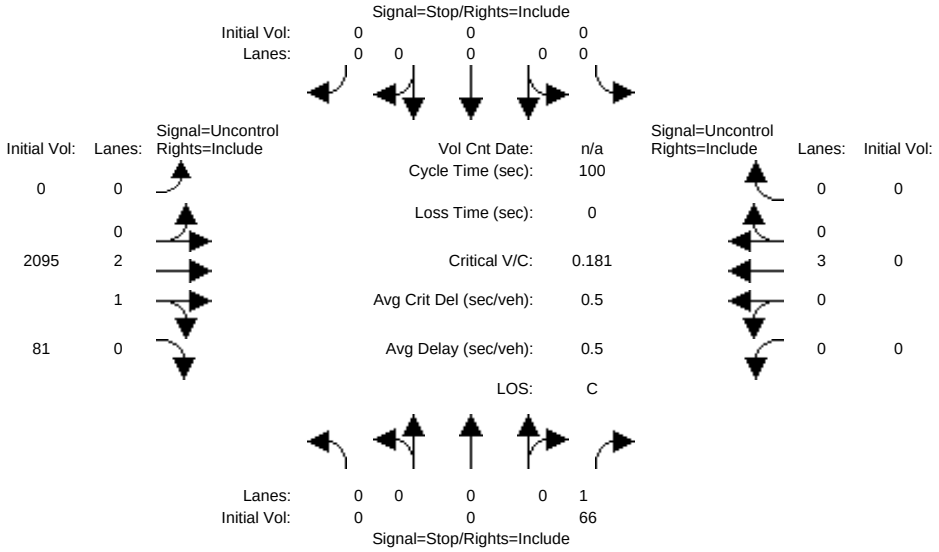


```
Street Name:              Sango Ct                    Montague Expressway
Approach:      North Bound      South Bound       East Bound       West Bound
Movement:     L  -  T  -  R    L  -  T  -  R    L  -  T  -  R    L  -  T  -  R
------------|---------------||---------------||---------------||---------------|
Volume Module:
Base Vol:       0    0    66     0    0     0     0 2095    81     0    0     0
Growth Adj:  1.00 1.00  1.00  1.00 1.00  1.00  1.00 1.00  1.00  1.00 1.00  1.00
Initial Bse:    0    0    66     0    0     0     0 2095    81     0    0     0
Added Vol:      0    0     0     0    0     0     0    0     0     0    0     0
PasserByVol:    0    0     0     0    0     0     0    0     0     0    0     0
Initial Fut:    0    0    66     0    0     0     0 2095    81     0    0     0
User Adj:    1.00 1.00  1.00  1.00 1.00  1.00  1.00 1.00  1.00  1.00 1.00  1.00
PHF Adj:     1.00 1.00  1.00  1.00 1.00  1.00  1.00 1.00  1.00  1.00 1.00  1.00
PHF Volume:     0    0    66     0    0     0     0 2095    81     0    0     0
Reduct Vol:     0    0     0     0    0     0     0    0     0     0    0     0
FinalVolume:    0    0    66     0    0     0     0 2095    81     0    0     0
------------|---------------||---------------||---------------||---------------|
Critical Gap Module:
Critical Gp:xxxxx xxxx   6.9 xxxxx xxxx xxxxx xxxxx xxxx xxxxx xxxxx xxxx xxxxx
FollowUpTim:xxxxx xxxx   3.3 xxxxx xxxx xxxxx xxxxx xxxx xxxxx xxxxx xxxx xxxxx
------------|---------------||---------------||---------------||---------------|
Capacity Module:
Cnflict Vol: xxxx xxxx   739  xxxx xxxx xxxxx  xxxx xxxx xxxxx  xxxx xxxx xxxxx
Potent Cap.: xxxx xxxx   364  xxxx xxxx xxxxx  xxxx xxxx xxxxx  xxxx xxxx xxxxx
Move Cap.:   xxxx xxxx   364  xxxx xxxx xxxxx  xxxx xxxx xxxxx  xxxx xxxx xxxxx
Volume/Cap:  xxxx xxxx  0.18  xxxx xxxx  xxxx  xxxx xxxx  xxxx  xxxx xxxx  xxxx
------------|---------------||---------------||---------------||---------------|
Level Of Service Module:
2Way95thQ:   xxxx xxxx   0.7  xxxx xxxx xxxxx  xxxx xxxx xxxxx  xxxx xxxx xxxxx
Control Del:xxxxx xxxx  17.1 xxxxx xxxx xxxxx xxxxx xxxx xxxxx xxxxx xxxx xxxxx
LOS by Move:    *    *     C     *    *     *     *    *     *     *    *     *
Movement:     LT - LTR - RT    LT - LTR - RT    LT - LTR - RT    LT - LTR - RT
Shared Cap.: xxxx xxxx xxxxx  xxxx xxxx xxxxx  xxxx xxxx xxxxx  xxxx xxxx xxxxx
SharedQueue:xxxxx xxxx xxxxx xxxxx xxxx xxxxx xxxxx xxxx xxxxx xxxxx xxxx xxxxx
Shrd ConDel:xxxxx xxxx xxxxx xxxxx xxxx xxxxx xxxxx xxxx xxxxx xxxxx xxxx xxxxx
Shared LOS:     *    *     *     *    *     *     *    *     *     *    *     *
ApproachDel:      17.1           xxxxxx           xxxxxx           xxxxxx
ApproachLOS:         C                *                *                *
Note: Queue reported is the number of cars per lane.
                     Peak Hour Delay Signal Warrant Report
*******************************************************************************
Intersection #5 Montague Expressway/Sango Ct
*******************************************************************************
Future Volume Alternative: Peak Hour Warrant NOT Met
```

```
------------|---------------||---------------||---------------||---------------|
Approach:      North Bound      South Bound       East Bound       West Bound
Movement:     L  -  T  -  R    L  -  T  -  R    L  -  T  -  R    L  -  T  -  R
------------|---------------||---------------||---------------||---------------|
Control:        Stop Sign        Stop Sign       Uncontrolled     Uncontrolled
Lanes:        0  0  0  0  1    0  0  0  0  0    0  0  2  1  0    0  0  3  0  0
Initial Vol:    0    0    66     0    0     0     0 2095    81     0    0     0
ApproachDel:      17.1           xxxxxx           xxxxxx           xxxxxx
------------|---------------||---------------||---------------||---------------|
Approach[northbound][lanes=1][control=Stop Sign]
Signal Warrant Rule #1: [vehicle-hours=0.3]
   FAIL - Vehicle-hours less than 4 for one lane approach.
Signal Warrant Rule #2: [approach volume=66]
   FAIL - Approach volume less than 100 for one lane approach.
Signal Warrant Rule #3: [approach count=2][total volume=2242]
   SUCCEED - Total volume greater than or equal to 650 for intersection
             with less than four approaches.
--------------------------------------------------------------------------------
SIGNAL WARRANT DISCLAIMER
This peak hour signal warrant analysis should be considered solely as an
"indicator" of the likelihood of an unsignalized intersection warranting
a traffic signal in the future.  Intersections that exceed this warrant
are probably more likely to meet one or more of the other volume based
signal warrant (such as the 4-hour or 8-hour warrants).

The peak hour warrant analysis in this report is not intended to replace
a rigorous and complete traffic signal warrant analysis by the responsible
jurisdiction.  Consideration of the other signal warrants, which is beyond
the scope of this software, may yield different results.
                Peak Hour Volume Signal Warrant Report [Urban]
********************************************************************************
Intersection #5 Montague Expressway/Sango Ct
********************************************************************************
Future Volume Alternative: Peak Hour Warrant NOT Met
------------|---------------||---------------||---------------||---------------|
Approach:      North Bound      South Bound       East Bound       West Bound
Movement:     L  -  T  -  R    L  -  T  -  R    L  -  T  -  R    L  -  T  -  R
------------|---------------||---------------||---------------||---------------|
Control:        Stop Sign        Stop Sign       Uncontrolled     Uncontrolled
Lanes:        0  0  0  0  1    0  0  0  0  0    0  0  2  1  0    0  0  3  0  0
Initial Vol:    0    0    66     0    0     0     0 2095    81     0    0     0
------------|---------------||---------------||---------------||---------------|
Major Street Volume:             2176
Minor Approach Volume:           66
Minor Approach Volume Threshold: 17 [less than minimum of 100]
--------------------------------------------------------------------------------
SIGNAL WARRANT DISCLAIMER
This peak hour signal warrant analysis should be considered solely as an
"indicator" of the likelihood of an unsignalized intersection warranting
a traffic signal in the future.  Intersections that exceed this warrant
are probably more likely to meet one or more of the other volume based
signal warrant (such as the 4-hour or 8-hour warrants).

The peak hour warrant analysis in this report is not intended to replace
a rigorous and complete traffic signal warrant analysis by the responsible
jurisdiction.  Consideration of the other signal warrants, which is beyond
the scope of this software, may yield different results.
```

Milpitas Boulevard Extension Bridge

Level Of Service Computation Report
2000 HCM Operations (Future Volume Alternative)
Cumulative PM

Intersection #1: CAPITOL AVE/MILPITAS BLVD

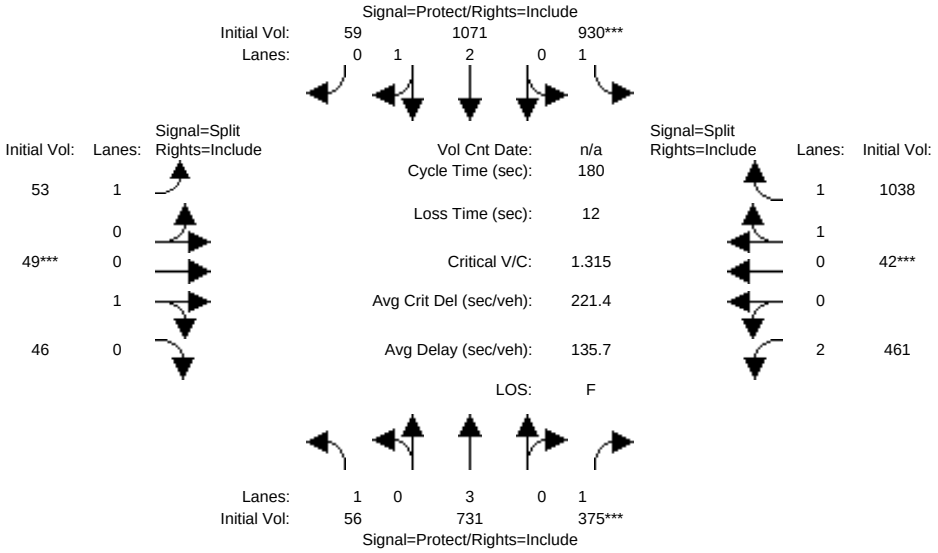

Approach:	North Bound			South Bound			East Bound			West Bound		
Movement:	L -	T -	R	L -	T -	R	L -	T -	R	L -	T -	R
Min. Green:	7	10	10	7	10	10	10	10	10	10	10	10
Y+R:	4.0	4.0	4.0	4.0	4.0	4.0	4.0	4.0	4.0	4.0	4.0	4.0
Volume Module:												
Base Vol:	56	731	375	930	1071	59	53	49	46	461	42	1038
Growth Adj:	1.00	1.00	1.00	1.00	1.00	1.00	1.00	1.00	1.00	1.00	1.00	1.00
Initial Bse:	56	731	375	930	1071	59	53	49	46	461	42	1038
Added Vol:	0	0	0	0	0	0	0	0	0	0	0	0
PasserByVol:	0	0	0	0	0	0	0	0	0	0	0	0
Initial Fut:	56	731	375	930	1071	59	53	49	46	461	42	1038
User Adj:	1.00	1.00	1.00	1.00	1.00	1.00	1.00	1.00	1.00	1.00	1.00	1.00
PHF Adj:	1.00	1.00	1.00	1.00	1.00	1.00	1.00	1.00	1.00	1.00	1.00	1.00
PHF Volume:	56	731	375	930	1071	59	53	49	46	461	42	1038
Reduct Vol:	0	0	0	0	0	0	0	0	0	0	0	0
Reduced Vol:	56	731	375	930	1071	59	53	49	46	461	42	1038
PCE Adj:	1.00	1.00	1.00	1.00	1.00	1.00	1.00	1.00	1.00	1.00	1.00	1.00
MLF Adj:	1.00	1.00	1.00	1.00	1.00	1.00	1.00	1.00	1.00	1.00	1.00	1.00
FinalVolume:	56	731	375	930	1071	59	53	49	46	461	42	1038
Saturation Flow Module:												
Sat/Lane:	1900	1900	1900	1900	1900	1900	1900	1900	1900	1900	1900	1900
Adjustment:	0.87	1.00	0.78	0.87	0.99	0.91	0.87	0.93	0.85	0.79	0.86	0.79
Lanes:	1.00	3.00	1.00	1.00	2.83	0.17	1.00	0.50	0.50	2.00	0.07	1.93
Final Sat.:	1663	5700	1488	1663	5335	294	1663	872	819	2993	117	2888
Capacity Analysis Module:												
Vol/Sat:	0.03	0.13	0.25	0.56	0.20	0.20	0.03	0.06	0.06	0.15	0.36	0.36
Crit Moves:			****	****				****			****	
Green/Cycle:	0.10	0.19	0.19	0.42	0.51	0.51	0.06	0.06	0.06	0.27	0.27	0.27
Volume/Cap:	0.34	0.68	1.33	1.33	0.39	0.39	0.57	1.01	1.01	0.57	1.33	1.33
Delay/Veh:	76.9	69.7	245.5	212.2	27.2	27.2	91.4	181	180.9	57.8	224	224.4
User DelAdj:	1.00	1.00	1.00	1.00	1.00	1.00	1.00	1.00	1.00	1.00	1.00	1.00
AdjDel/Veh:	76.9	69.7	245.5	212.2	27.2	27.2	91.4	181	180.9	57.8	224	224.4
LOS by Move:	E	E	F	F	C	C	F	F	F	E	F	F
HCM2kAvgQ:	3	13	36	86	12	12	4	9	9	13	51	51

Note: Queue reported is the number of cars per lane.

Milpitas Boulevard Extension Bridge

Level Of Service Computation Report
2000 HCM Operations (Future Volume Alternative)
Cumulative + Project PM

Intersection #1: CAPITOL AVE/MILPITAS BLVD

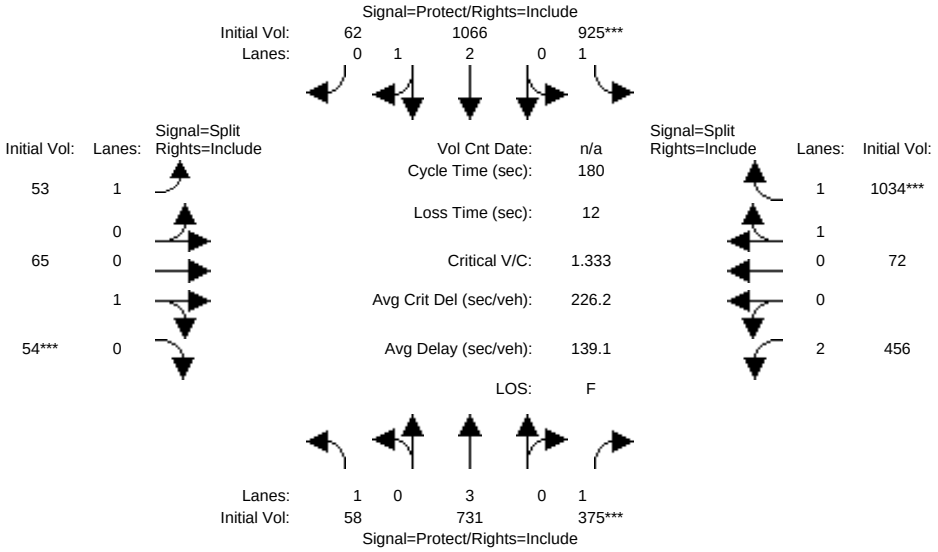

Approach:	North Bound			South Bound			East Bound			West Bound		
Movement:	L -	T -	R	L -	T -	R	L -	T -	R	L -	T -	R
Min. Green:	7	10	10	7	10	10	10	10	10	10	10	10
Y+R:	4.0	4.0	4.0	4.0	4.0	4.0	4.0	4.0	4.0	4.0	4.0	4.0
Volume Module:												
Base Vol:	58	731	375	925	1066	62	53	65	54	456	72	1034
Growth Adj:	1.00	1.00	1.00	1.00	1.00	1.00	1.00	1.00	1.00	1.00	1.00	1.00
Initial Bse:	58	731	375	925	1066	62	53	65	54	456	72	1034
Added Vol:	0	0	0	0	0	0	0	0	0	0	0	0
PasserByVol:	0	0	0	0	0	0	0	0	0	0	0	0
Initial Fut:	58	731	375	925	1066	62	53	65	54	456	72	1034
User Adj:	1.00	1.00	1.00	1.00	1.00	1.00	1.00	1.00	1.00	1.00	1.00	1.00
PHF Adj:	1.00	1.00	1.00	1.00	1.00	1.00	1.00	1.00	1.00	1.00	1.00	1.00
PHF Volume:	58	731	375	925	1066	62	53	65	54	456	72	1034
Reduct Vol:	0	0	0	0	0	0	0	0	0	0	0	0
Reduced Vol:	58	731	375	925	1066	62	53	65	54	456	72	1034
PCE Adj:	1.00	1.00	1.00	1.00	1.00	1.00	1.00	1.00	1.00	1.00	1.00	1.00
MLF Adj:	1.00	1.00	1.00	1.00	1.00	1.00	1.00	1.00	1.00	1.00	1.00	1.00
FinalVolume:	58	731	375	925	1066	62	53	65	54	456	72	1034
Saturation Flow Module:												
Sat/Lane:	1900	1900	1900	1900	1900	1900	1900	1900	1900	1900	1900	1900
Adjustment:	0.87	1.00	0.78	0.87	0.99	0.91	0.87	0.93	0.86	0.79	0.86	0.79
Lanes:	1.00	3.00	1.00	1.00	2.82	0.18	1.00	0.53	0.47	2.00	0.12	1.88
Final Sat.:	1663	5700	1488	1663	5319	309	1663	931	773	2993	197	2829
Capacity Analysis Module:												
Vol/Sat:	0.03	0.13	0.25	0.56	0.20	0.20	0.03	0.07	0.07	0.15	0.37	0.37
Crit Moves:			****	****					****			****
Green/Cycle:	0.10	0.19	0.19	0.42	0.51	0.51	0.06	0.06	0.06	0.27	0.27	0.27
Volume/Cap:	0.36	0.68	1.34	1.34	0.40	0.40	0.57	1.26	1.26	0.56	1.34	1.34
Delay/Veh:	77.2	69.8	247.1	214.1	27.5	27.5	91.4	261	261.4	56.9	225	225.5
User DelAdj:	1.00	1.00	1.00	1.00	1.00	1.00	1.00	1.00	1.00	1.00	1.00	1.00
AdjDel/Veh:	77.2	69.8	247.1	214.1	27.5	27.5	91.4	261	261.4	56.9	225	225.5
LOS by Move:	E	E	F	F	C	C	F	F	F	E	F	F
HCM2kAvgQ:	3	13	36	85	12	12	4	12	12	13	52	52

Note: Queue reported is the number of cars per lane.

Milpitas Boulevard Extension Bridge

Level Of Service Computation Report
2000 HCM Operations (Future Volume Alternative)
Cumulative PM

Intersection #2: LUNDY/TRADE ZONE

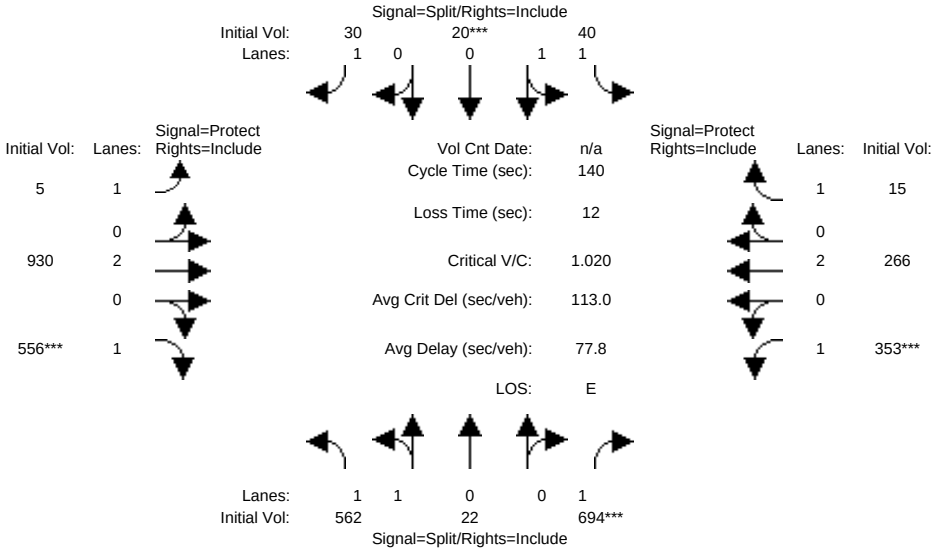

Approach:	North Bound			South Bound			East Bound			West Bound		
Movement:	L -	T -	R	L -	T -	R	L -	T -	R	L -	T -	R
Min. Green:	10	10	10	10	10	10	7	10	10	7	10	10
Y+R:	4.0	4.0	4.0	4.0	4.0	4.0	4.0	4.0	4.0	4.0	4.0	4.0
Volume Module:												
Base Vol:	562	22	694	40	20	30	5	930	556	353	266	15
Growth Adj:	1.00	1.00	1.00	1.00	1.00	1.00	1.00	1.00	1.00	1.00	1.00	1.00
Initial Bse:	562	22	694	40	20	30	5	930	556	353	266	15
Added Vol:	0	0	0	0	0	0	0	0	0	0	0	0
PasserByVol:	0	0	0	0	0	0	0	0	0	0	0	0
Initial Fut:	562	22	694	40	20	30	5	930	556	353	266	15
User Adj:	1.00	1.00	1.00	1.00	1.00	1.00	1.00	1.00	1.00	1.00	1.00	1.00
PHF Adj:	1.00	1.00	1.00	1.00	1.00	1.00	1.00	1.00	1.00	1.00	1.00	1.00
PHF Volume:	562	22	694	40	20	30	5	930	556	353	266	15
Reduct Vol:	0	0	0	0	0	0	0	0	0	0	0	0
Reduced Vol:	562	22	694	40	20	30	5	930	556	353	266	15
PCE Adj:	1.00	1.00	1.00	1.00	1.00	1.00	1.00	1.00	1.00	1.00	1.00	1.00
MLF Adj:	1.00	1.00	1.00	1.00	1.00	1.00	1.00	1.00	1.00	1.00	1.00	1.00
FinalVolume:	562	22	694	40	20	30	5	930	556	353	266	15
Saturation Flow Module:												
Sat/Lane:	1900	1900	1900	1900	1900	1900	1900	1900	1900	1900	1900	1900
Adjustment:	0.92	1.00	0.92	0.92	1.00	0.92	0.92	1.00	0.92	0.92	1.00	0.92
Lanes:	1.93	0.07	1.00	1.37	0.63	1.00	1.00	2.00	1.00	1.00	2.00	1.00
Final Sat.:	3378	132	1750	2396	1198	1750	1750	3800	1750	1750	3800	1750
Capacity Analysis Module:												
Vol/Sat:	0.17	0.17	0.40	0.02	0.02	0.02	0.00	0.24	0.32	0.20	0.07	0.01
Crit Moves:			****		****				****	****		
Green/Cycle:	0.36	0.36	0.36	0.07	0.07	0.07	0.20	0.29	0.29	0.19	0.28	0.28
Volume/Cap:	0.46	0.46	1.09	0.23	0.23	0.24	0.01	0.84	1.09	1.09	0.25	0.03
Delay/Veh:	35.0	35.0	105.9	63.5	63.5	65.9	45.4	54.0	114.9	132.1	39.5	36.6
User DelAdj:	1.00	1.00	1.00	1.00	1.00	1.00	1.00	1.00	1.00	1.00	1.00	1.00
AdjDel/Veh:	35.0	35.0	105.9	63.5	63.5	65.9	45.4	54.0	114.9	132.1	39.5	36.6
LOS by Move:	D	D	F	E	E	E	D	D	F	F	D	D
HCM2kAvgQ:	10	10	43	1	1	2	0	21	36	24	4	0

Note: Queue reported is the number of cars per lane.

Milpitas Boulevard Extension Bridge

Level Of Service Computation Report
2000 HCM Operations (Future Volume Alternative)
Cumulative + Project PM

Intersection #2: LUNDY/TRADE ZONE

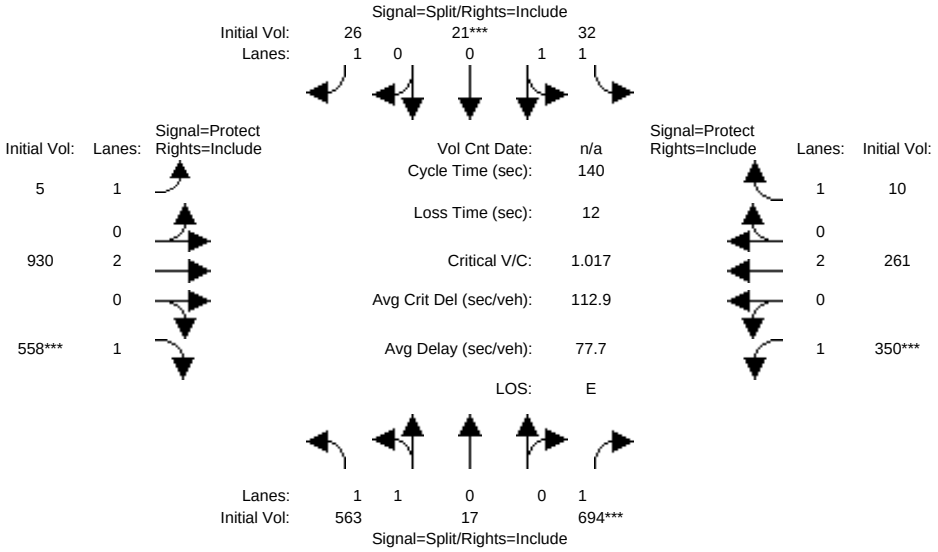

Approach:	North Bound			South Bound			East Bound			West Bound		
Movement:	L -	T -	R	L -	T -	R	L -	T -	R	L -	T -	R
Min. Green:	10	10	10	10	10	10	7	10	10	7	10	10
Y+R:	4.0	4.0	4.0	4.0	4.0	4.0	4.0	4.0	4.0	4.0	4.0	4.0
Volume Module:												
Base Vol:	563	17	694	32	21	26	5	930	558	350	261	10
Growth Adj:	1.00	1.00	1.00	1.00	1.00	1.00	1.00	1.00	1.00	1.00	1.00	1.00
Initial Bse:	563	17	694	32	21	26	5	930	558	350	261	10
Added Vol:	0	0	0	0	0	0	0	0	0	0	0	0
PasserByVol:	0	0	0	0	0	0	0	0	0	0	0	0
Initial Fut:	563	17	694	32	21	26	5	930	558	350	261	10
User Adj:	1.00	1.00	1.00	1.00	1.00	1.00	1.00	1.00	1.00	1.00	1.00	1.00
PHF Adj:	1.00	1.00	1.00	1.00	1.00	1.00	1.00	1.00	1.00	1.00	1.00	1.00
PHF Volume:	563	17	694	32	21	26	5	930	558	350	261	10
Reduct Vol:	0	0	0	0	0	0	0	0	0	0	0	0
Reduced Vol:	563	17	694	32	21	26	5	930	558	350	261	10
PCE Adj:	1.00	1.00	1.00	1.00	1.00	1.00	1.00	1.00	1.00	1.00	1.00	1.00
MLF Adj:	1.00	1.00	1.00	1.00	1.00	1.00	1.00	1.00	1.00	1.00	1.00	1.00
FinalVolume:	563	17	694	32	21	26	5	930	558	350	261	10
Saturation Flow Module:												
Sat/Lane:	1900	1900	1900	1900	1900	1900	1900	1900	1900	1900	1900	1900
Adjustment:	0.92	1.00	0.92	0.92	1.00	0.92	0.92	1.00	0.92	0.92	1.00	0.92
Lanes:	1.95	0.05	1.00	1.25	0.75	1.00	1.00	2.00	1.00	1.00	2.00	1.00
Final Sat.:	3405	103	1750	2181	1432	1750	1750	3800	1750	1750	3800	1750
Capacity Analysis Module:												
Vol/Sat:	0.17	0.17	0.40	0.01	0.01	0.01	0.00	0.24	0.32	0.20	0.07	0.01
Crit Moves:			****		****				****	****		
Green/Cycle:	0.37	0.37	0.37	0.07	0.07	0.07	0.20	0.29	0.29	0.18	0.28	0.28
Volume/Cap:	0.45	0.45	1.09	0.21	0.21	0.21	0.01	0.83	1.09	1.09	0.24	0.02
Delay/Veh:	35.0	35.0	105.7	63.0	63.0	65.0	45.4	53.6	114.5	132.2	39.4	36.5
User DelAdj:	1.00	1.00	1.00	1.00	1.00	1.00	1.00	1.00	1.00	1.00	1.00	1.00
AdjDel/Veh:	35.0	35.0	105.7	63.0	63.0	65.0	45.4	53.6	114.5	132.2	39.4	36.5
LOS by Move:	C	C	F	E	E	E	D	D	F	F	D	D
HCM2kAvgQ:	10	10	43	1	1	1	0	21	36	24	4	0

Note: Queue reported is the number of cars per lane.

Milpitas Boulevard Extension Bridge

Level Of Service Computation Report
2000 HCM Operations (Future Volume Alternative)
Cumulative PM

Intersection #3: MONTAGUE EXPWY/TRADE ZONE BLVD

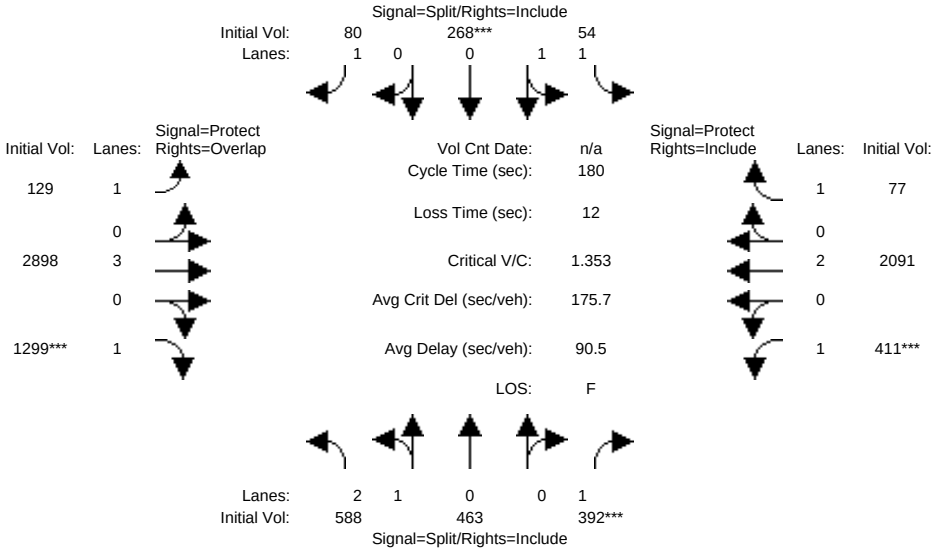

Street Name:	Trade Zone Blvd						Montague Expressway					
Approach:	North Bound			South Bound			East Bound			West Bound		
Movement:	L -	T -	R	L -	T -	R	L -	T -	R	L -	T -	R
Min. Green:	10	10	10	10	10	10	7	100	10	7	107	10
Y+R:	4.0	4.0	4.0	4.0	4.0	4.0	4.0	4.0	4.0	4.0	4.0	4.0
Volume Module:												
Base Vol:	588	463	392	54	268	80	129	2898	1299	411	2091	77
Growth Adj:	1.00	1.00	1.00	1.00	1.00	1.00	1.00	1.00	1.00	1.00	1.00	1.00
Initial Bse:	588	463	392	54	268	80	129	2898	1299	411	2091	77
Added Vol:	0	0	0	0	0	0	0	0	0	0	0	0
PasserByVol:	0	0	0	0	0	0	0	0	0	0	0	0
Initial Fut:	588	463	392	54	268	80	129	2898	1299	411	2091	77
User Adj:	1.00	1.00	1.00	1.00	1.00	1.00	1.00	1.00	1.00	1.00	1.00	1.00
PHF Adj:	1.00	1.00	1.00	1.00	1.00	1.00	1.00	1.00	1.00	1.00	1.00	1.00
PHF Volume:	588	463	392	54	268	80	129	2898	1299	411	2091	77
Reduct Vol:	0	0	0	0	0	0	0	0	0	0	0	0
Reduced Vol:	588	463	392	54	268	80	129	2898	1299	411	2091	77
PCE Adj:	1.00	1.00	1.00	1.00	1.00	1.00	1.00	1.00	1.00	1.00	1.00	1.00
MLF Adj:	1.00	1.00	1.00	1.00	1.00	1.00	1.00	1.00	1.00	1.00	1.00	1.00
FinalVolume:	588	463	392	54	268	80	129	2898	1299	411	2091	77
Saturation Flow Module:												
Sat/Lane:	1900	1900	1900	1900	1900	1900	1900	1900	1900	1900	1900	1900
Adjustment:	0.81	0.97	0.78	0.91	0.99	0.78	0.87	1.00	0.78	0.87	1.00	0.78
Lanes:	2.00	1.00	1.00	1.00	1.00	1.00	1.00	3.00	1.00	1.00	2.00	1.00
Final Sat.:	3065	1849	1488	1736	1885	1488	1663	5700	1488	1663	3800	1488
Capacity Analysis Module:												
Vol/Sat:	0.19	0.25	0.26	0.03	0.14	0.05	0.08	0.51	0.87	0.25	0.55	0.05
Crit Moves:			****		****				****	****		
Green/Cycle:	0.19	0.19	0.19	0.11	0.11	0.11	0.08	0.56	0.75	0.18	0.61	0.61
Volume/Cap:	0.98	1.29	1.35	0.30	1.35	0.51	0.98	0.92	1.16	1.35	0.91	0.09
Delay/Veh:	96.0	210	252.3	74.5	264	79.0	154.4	40.9	106.3	252.5	36.5	14.7
User DelAdj:	1.00	1.00	1.00	1.00	1.00	1.00	1.00	1.00	1.00	1.00	1.00	1.00
AdjDel/Veh:	96.0	210	252.3	74.5	264	79.0	154.4	40.9	106.3	252.5	36.5	14.7
LOS by Move:	F	F	F	E	F	E	F	D	F	F	D	B
HCM2kAvgQ:	24	40	38	3	25	5	11	50	101	40	52	2

Note: Queue reported is the number of cars per lane.

Milpitas Boulevard Extension Bridge

Level Of Service Computation Report
2000 HCM Operations (Future Volume Alternative)
Cumulative + Project PM

Intersection #3: MONTAGUE EXPWY/TRADE ZONE BLVD

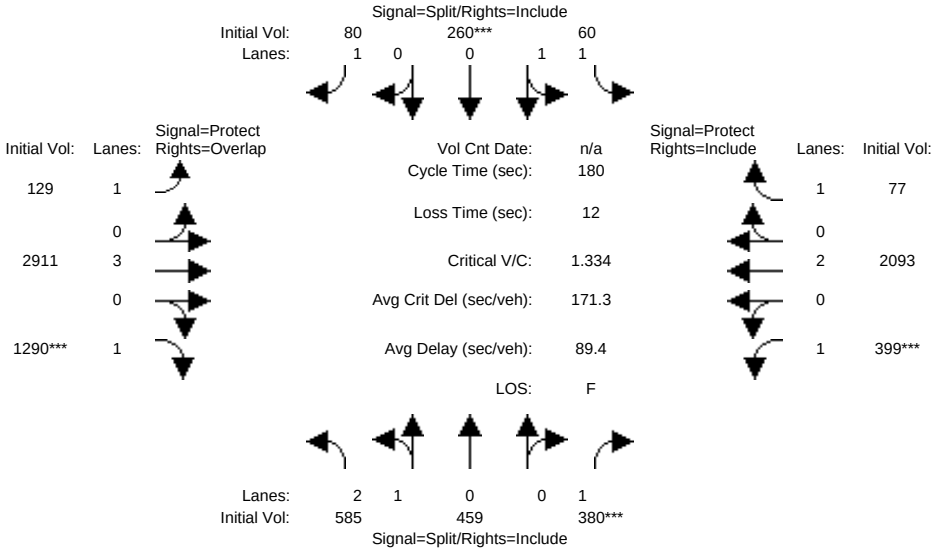

Street Name:	Trade Zone Blvd						Montague Expressway					
Approach:	North Bound			South Bound			East Bound			West Bound		
Movement:	L -	T -	R	L -	T -	R	L -	T -	R	L -	T -	R
Min. Green:	10	10	10	10	10	10	7	100	10	7	107	10
Y+R:	4.0	4.0	4.0	4.0	4.0	4.0	4.0	4.0	4.0	4.0	4.0	4.0
Volume Module:												
Base Vol:	585	459	380	60	260	80	129	2911	1290	399	2093	77
Growth Adj:	1.00	1.00	1.00	1.00	1.00	1.00	1.00	1.00	1.00	1.00	1.00	1.00
Initial Bse:	585	459	380	60	260	80	129	2911	1290	399	2093	77
Added Vol:	0	0	0	0	0	0	0	0	0	0	0	0
PasserByVol:	0	0	0	0	0	0	0	0	0	0	0	0
Initial Fut:	585	459	380	60	260	80	129	2911	1290	399	2093	77
User Adj:	1.00	1.00	1.00	1.00	1.00	1.00	1.00	1.00	1.00	1.00	1.00	1.00
PHF Adj:	1.00	1.00	1.00	1.00	1.00	1.00	1.00	1.00	1.00	1.00	1.00	1.00
PHF Volume:	585	459	380	60	260	80	129	2911	1290	399	2093	77
Reduct Vol:	0	0	0	0	0	0	0	0	0	0	0	0
Reduced Vol:	585	459	380	60	260	80	129	2911	1290	399	2093	77
PCE Adj:	1.00	1.00	1.00	1.00	1.00	1.00	1.00	1.00	1.00	1.00	1.00	1.00
MLF Adj:	1.00	1.00	1.00	1.00	1.00	1.00	1.00	1.00	1.00	1.00	1.00	1.00
FinalVolume:	585	459	380	60	260	80	129	2911	1290	399	2093	77
Saturation Flow Module:												
Sat/Lane:	1900	1900	1900	1900	1900	1900	1900	1900	1900	1900	1900	1900
Adjustment:	0.81	0.97	0.78	0.91	0.99	0.78	0.87	1.00	0.78	0.87	1.00	0.78
Lanes:	2.00	1.00	1.00	1.00	1.00	1.00	1.00	3.00	1.00	1.00	2.00	1.00
Final Sat.:	3065	1849	1488	1734	1883	1488	1663	5700	1488	1663	3800	1488
Capacity Analysis Module:												
Vol/Sat:	0.19	0.25	0.26	0.03	0.14	0.05	0.08	0.51	0.87	0.24	0.55	0.05
Crit Moves:			****		****				****	****		
Green/Cycle:	0.19	0.19	0.19	0.10	0.10	0.10	0.08	0.56	0.75	0.18	0.61	0.61
Volume/Cap:	1.00	1.30	1.33	0.33	1.33	0.52	0.98	0.92	1.16	1.33	0.91	0.09
Delay/Veh:	99.7	215	245.2	75.1	257	79.6	154.2	41.3	105.4	245.3	36.5	14.7
User DelAdj:	1.00	1.00	1.00	1.00	1.00	1.00	1.00	1.00	1.00	1.00	1.00	1.00
AdjDel/Veh:	99.7	215	245.2	75.1	257	79.6	154.2	41.3	105.4	245.3	36.5	14.7
LOS by Move:	F	F	F	E	F	E	F	D	F	F	D	B
HCM2kAvgQ:	24	40	37	4	24	5	11	51	100	38	52	2

Note: Queue reported is the number of cars per lane.

Milpitas Boulevard Extension Bridge

Level Of Service Computation Report
2000 HCM Operations (Future Volume Alternative)
Cumulative PM

Intersection #4: MONTAGUE EXPWY/CAPITOL AVE

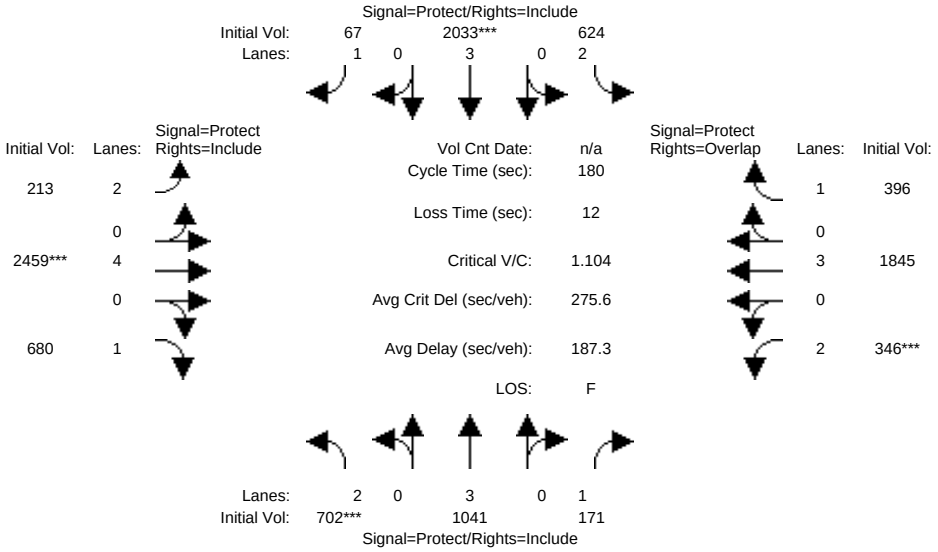

Approach:	North Bound			South Bound			East Bound			West Bound		
Movement:	L -	T -	R	L -	T -	R	L -	T -	R	L -	T -	R
Min. Green:	7	10	10	7	10	10	7	100	10	7	90	10
Y+R:	4.0	4.0	4.0	4.0	4.0	4.0	4.0	4.0	4.0	4.0	4.0	4.0
Volume Module:												
Base Vol:	702	1041	171	624	2033	67	213	2459	680	346	1845	396
Growth Adj:	1.00	1.00	1.00	1.00	1.00	1.00	1.00	1.00	1.00	1.00	1.00	1.00
Initial Bse:	702	1041	171	624	2033	67	213	2459	680	346	1845	396
Added Vol:	0	0	0	0	0	0	0	0	0	0	0	0
PasserByVol:	0	0	0	0	0	0	0	0	0	0	0	0
Initial Fut:	702	1041	171	624	2033	67	213	2459	680	346	1845	396
User Adj:	1.00	1.00	1.00	1.00	1.00	1.00	1.00	1.00	1.00	1.00	1.00	1.00
PHF Adj:	1.00	1.00	1.00	1.00	1.00	1.00	1.00	1.00	1.00	1.00	1.00	1.00
PHF Volume:	702	1041	171	624	2033	67	213	2459	680	346	1845	396
Reduct Vol:	0	0	0	0	0	0	0	0	0	0	0	0
Reduced Vol:	702	1041	171	624	2033	67	213	2459	680	346	1845	396
PCE Adj:	1.00	1.00	1.00	1.00	1.00	1.00	1.00	1.00	1.00	1.00	1.00	1.00
MLF Adj:	1.00	1.00	1.00	1.00	1.00	1.00	1.00	1.00	1.00	1.00	1.00	1.00
FinalVolume:	702	1041	171	624	2033	67	213	2459	680	346	1845	396
Saturation Flow Module:												
Sat/Lane:	1900	1900	1900	1900	1900	1900	1900	1900	1900	1900	1900	1900
Adjustment:	0.79	1.00	0.78	0.79	1.00	0.78	0.79	1.00	0.78	0.79	1.00	0.78
Lanes:	2.00	3.00	1.00	2.00	3.00	1.00	2.00	4.00	1.00	2.00	3.00	1.00
Final Sat.:	2993	5700	1488	2993	5700	1488	2993	7600	1488	2993	5700	1488
Capacity Analysis Module:												
Vol/Sat:	0.23	0.18	0.11	0.21	0.36	0.05	0.07	0.32	0.46	0.12	0.32	0.27
Crit Moves:	****				****			****		****		
Green/Cycle:	0.13	0.15	0.15	0.17	0.19	0.19	0.08	0.56	0.56	0.06	0.54	0.71
Volume/Cap:	1.87	1.24	0.78	1.24	1.87	0.24	0.93	0.58	0.82	1.87	0.60	0.38
Delay/Veh:	480.8	194	90.1	198.0	468	62.2	121.8	26.5	39.4	496.4	28.4	10.6
User DelAdj:	1.00	1.00	1.00	1.00	1.00	1.00	1.00	1.00	1.00	1.00	1.00	1.00
AdjDel/Veh:	480.8	194	90.1	198.0	468	62.2	121.8	26.5	39.4	496.4	28.4	10.6
LOS by Move:	F	F	F	F	F	E	F	C	D	F	C	B
HCM2kAvgQ:	48	29	11	32	75	3	10	22	34	24	22	9

Note: Queue reported is the number of cars per lane.

Milpitas Boulevard Extension Bridge

Level Of Service Computation Report
2000 HCM Operations (Future Volume Alternative)
Cumulative + Project PM

Intersection #4: MONTAGUE EXPWY/CAPITOL AVE

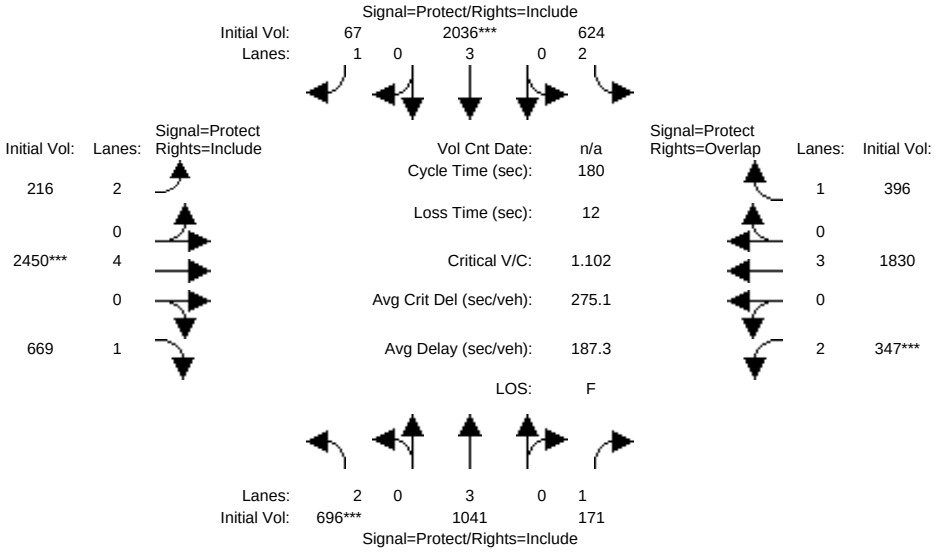

Approach:	North Bound			South Bound			East Bound			West Bound		
Movement:	L -	T -	R	L -	T -	R	L -	T -	R	L -	T -	R
Min. Green:	7	10	10	7	10	10	7	100	10	7	90	10
Y+R:	4.0	4.0	4.0	4.0	4.0	4.0	4.0	4.0	4.0	4.0	4.0	4.0
Volume Module:												
Base Vol:	696	1041	171	624	2036	67	216	2450	669	347	1830	396
Growth Adj:	1.00	1.00	1.00	1.00	1.00	1.00	1.00	1.00	1.00	1.00	1.00	1.00
Initial Bse:	696	1041	171	624	2036	67	216	2450	669	347	1830	396
Added Vol:	0	0	0	0	0	0	0	0	0	0	0	0
PasserByVol:	0	0	0	0	0	0	0	0	0	0	0	0
Initial Fut:	696	1041	171	624	2036	67	216	2450	669	347	1830	396
User Adj:	1.00	1.00	1.00	1.00	1.00	1.00	1.00	1.00	1.00	1.00	1.00	1.00
PHF Adj:	1.00	1.00	1.00	1.00	1.00	1.00	1.00	1.00	1.00	1.00	1.00	1.00
PHF Volume:	696	1041	171	624	2036	67	216	2450	669	347	1830	396
Reduct Vol:	0	0	0	0	0	0	0	0	0	0	0	0
Reduced Vol:	696	1041	171	624	2036	67	216	2450	669	347	1830	396
PCE Adj:	1.00	1.00	1.00	1.00	1.00	1.00	1.00	1.00	1.00	1.00	1.00	1.00
MLF Adj:	1.00	1.00	1.00	1.00	1.00	1.00	1.00	1.00	1.00	1.00	1.00	1.00
FinalVolume:	696	1041	171	624	2036	67	216	2450	669	347	1830	396
Saturation Flow Module:												
Sat/Lane:	1900	1900	1900	1900	1900	1900	1900	1900	1900	1900	1900	1900
Adjustment:	0.79	1.00	0.78	0.79	1.00	0.78	0.79	1.00	0.78	0.79	1.00	0.78
Lanes:	2.00	3.00	1.00	2.00	3.00	1.00	2.00	4.00	1.00	2.00	3.00	1.00
Final Sat.:	2993	5700	1488	2993	5700	1488	2993	7600	1488	2993	5700	1488
Capacity Analysis Module:												
Vol/Sat:	0.23	0.18	0.11	0.21	0.36	0.05	0.07	0.32	0.45	0.12	0.32	0.27
Crit Moves:	****				****			****		****		
Green/Cycle:	0.12	0.15	0.15	0.17	0.19	0.19	0.08	0.56	0.56	0.06	0.54	0.71
Volume/Cap:	1.87	1.24	0.78	1.24	1.87	0.24	0.93	0.58	0.81	1.87	0.59	0.38
Delay/Veh:	479.6	194	90.2	198.5	467	62.1	121.7	26.4	38.3	494.9	28.4	10.7
User DelAdj:	1.00	1.00	1.00	1.00	1.00	1.00	1.00	1.00	1.00	1.00	1.00	1.00
AdjDel/Veh:	479.6	194	90.2	198.5	467	62.1	121.7	26.4	38.3	494.9	28.4	10.7
LOS by Move:	F	F	F	F	F	E	F	C	D	F	C	B
HCM2kAvgQ:	47	29	11	32	75	3	10	21	33	24	22	9

Note: Queue reported is the number of cars per lane.

Milpitas Boulevard Extension Bridge

Level Of Service Computation Report
2000 HCM Unsignalized (Future Volume Alternative)
Cumulative PM

Intersection #5: Montague Expressway/Sango Ct

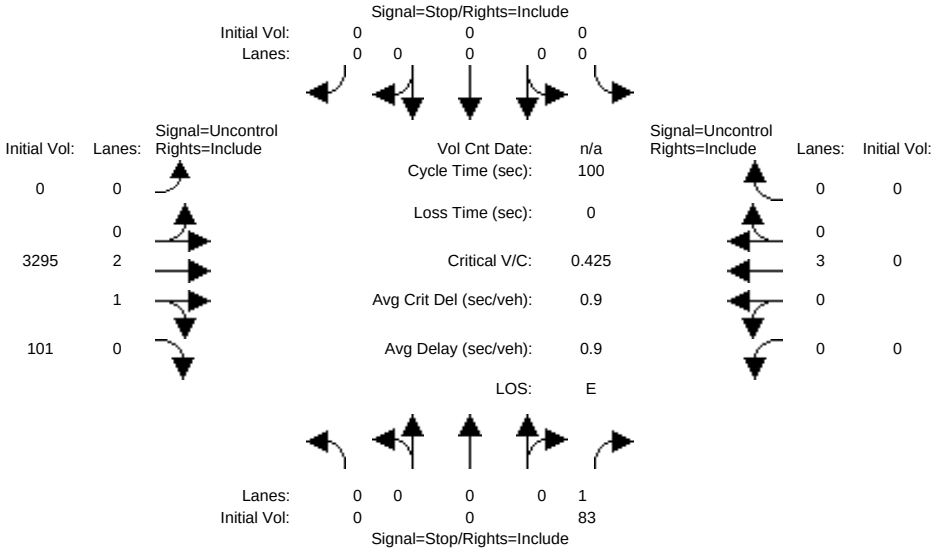


```
Street Name:              Sango Ct                    Montague Expressway
Approach:       North Bound      South Bound       East Bound       West Bound
Movement:      L  -  T  -  R    L  -  T  -  R    L  -  T  -  R    L  -  T  -  R
------------|---------------||---------------||---------------||---------------|
Volume Module:
Base Vol:       0    0    83     0    0     0     0 3295   101     0    0     0
Growth Adj:  1.00 1.00  1.00  1.00 1.00  1.00  1.00 1.00  1.00  1.00 1.00  1.00
Initial Bse:    0    0    83     0    0     0     0 3295   101     0    0     0
Added Vol:      0    0     0     0    0     0     0    0     0     0    0     0
PasserByVol:    0    0     0     0    0     0     0    0     0     0    0     0
Initial Fut:    0    0    83     0    0     0     0 3295   101     0    0     0
User Adj:    1.00 1.00  1.00  1.00 1.00  1.00  1.00 1.00  1.00  1.00 1.00  1.00
PHF Adj:     1.00 1.00  1.00  1.00 1.00  1.00  1.00 1.00  1.00  1.00 1.00  1.00
PHF Volume:     0    0    83     0    0     0     0 3295   101     0    0     0
Reduct Vol:     0    0     0     0    0     0     0    0     0     0    0     0
FinalVolume:    0    0    83     0    0     0     0 3295   101     0    0     0
------------|---------------||---------------||---------------||---------------|
Critical Gap Module:
Critical Gp:xxxxx xxxx   6.9 xxxxx xxxx xxxxx xxxxx xxxx xxxxx xxxxx xxxx xxxxx
FollowUpTim:xxxxx xxxx   3.3 xxxxx xxxx xxxxx xxxxx xxxx xxxxx xxxxx xxxx xxxxx
------------|---------------||---------------||---------------||---------------|
Capacity Module:
Cnflict Vol: xxxx xxxx  1149  xxxx xxxx xxxxx  xxxx xxxx xxxxx  xxxx xxxx xxxxx
Potent Cap.: xxxx xxxx   195  xxxx xxxx xxxxx  xxxx xxxx xxxxx  xxxx xxxx xxxxx
Move Cap.:   xxxx xxxx   195  xxxx xxxx xxxxx  xxxx xxxx xxxxx  xxxx xxxx xxxxx
Volume/Cap:  xxxx xxxx  0.43  xxxx xxxx  xxxx  xxxx xxxx  xxxx  xxxx xxxx  xxxx
------------|---------------||---------------||---------------||---------------|
Level Of Service Module:
2Way95thQ:   xxxx xxxx   1.9  xxxx xxxx xxxxx  xxxx xxxx xxxxx  xxxx xxxx xxxxx
Control Del:xxxxx xxxx  36.5 xxxxx xxxx xxxxx xxxxx xxxx xxxxx xxxxx xxxx xxxxx
LOS by Move:    *    *     E     *    *     *     *    *     *     *    *     *
Movement:     LT - LTR - RT    LT - LTR - RT    LT - LTR - RT    LT - LTR - RT
Shared Cap.: xxxx xxxx xxxxx  xxxx xxxx xxxxx  xxxx xxxx xxxxx  xxxx xxxx xxxxx
SharedQueue:xxxxx xxxx xxxxx xxxxx xxxx xxxxx xxxxx xxxx xxxxx xxxxx xxxx xxxxx
Shrd ConDel:xxxxx xxxx xxxxx xxxxx xxxx xxxxx xxxxx xxxx xxxxx xxxxx xxxx xxxxx
Shared LOS:     *    *     *     *    *     *     *    *     *     *    *     *
ApproachDel:      36.5           xxxxxx            xxxxxx            xxxxxx
ApproachLOS:         E                 *                 *                 *
Note: Queue reported is the number of cars per lane.
                     Peak Hour Delay Signal Warrant Report
*******************************************************************************
Intersection #5 Montague Expressway/Sango Ct
*******************************************************************************
Future Volume Alternative: Peak Hour Warrant NOT Met
```

```
------------|---------------||---------------||---------------||---------------|
Approach:      North Bound      South Bound       East Bound       West Bound
Movement:     L  -  T  -  R    L  -  T  -  R    L  -  T  -  R    L  -  T  -  R
------------|---------------||---------------||---------------||---------------|
Control:        Stop Sign        Stop Sign       Uncontrolled     Uncontrolled
Lanes:        0  0  0  0  1    0  0  0  0  0    0  0  2  1  0    0  0  3  0  0
Initial Vol:    0    0    83     0    0     0     0 3295   101     0    0     0
ApproachDel:      36.5           xxxxxx           xxxxxx           xxxxxx
------------|---------------||---------------||---------------||---------------|
Approach[northbound][lanes=1][control=Stop Sign]
Signal Warrant Rule #1: [vehicle-hours=0.8]
   FAIL - Vehicle-hours less than 4 for one lane approach.
Signal Warrant Rule #2: [approach volume=83]
   FAIL - Approach volume less than 100 for one lane approach.
Signal Warrant Rule #3: [approach count=2][total volume=3479]
   SUCCEED - Total volume greater than or equal to 650 for intersection
             with less than four approaches.
--------------------------------------------------------------------------------
SIGNAL WARRANT DISCLAIMER
This peak hour signal warrant analysis should be considered solely as an
"indicator" of the likelihood of an unsignalized intersection warranting
a traffic signal in the future.  Intersections that exceed this warrant
are probably more likely to meet one or more of the other volume based
signal warrant (such as the 4-hour or 8-hour warrants).

The peak hour warrant analysis in this report is not intended to replace
a rigorous and complete traffic signal warrant analysis by the responsible
jurisdiction.  Consideration of the other signal warrants, which is beyond
the scope of this software, may yield different results.
                Peak Hour Volume Signal Warrant Report [Urban]
********************************************************************************
Intersection #5 Montague Expressway/Sango Ct
********************************************************************************
Future Volume Alternative: Peak Hour Warrant NOT Met
------------|---------------||---------------||---------------||---------------|
Approach:      North Bound      South Bound       East Bound       West Bound
Movement:     L  -  T  -  R    L  -  T  -  R    L  -  T  -  R    L  -  T  -  R
------------|---------------||---------------||---------------||---------------|
Control:        Stop Sign        Stop Sign       Uncontrolled     Uncontrolled
Lanes:        0  0  0  0  1    0  0  0  0  0    0  0  2  1  0    0  0  3  0  0
Initial Vol:    0    0    83     0    0     0     0 3295   101     0    0     0
------------|---------------||---------------||---------------||---------------|
Major Street Volume:             3396
Minor Approach Volume:           83
Minor Approach Volume Threshold: -136 [less than minimum of 100]
--------------------------------------------------------------------------------
SIGNAL WARRANT DISCLAIMER
This peak hour signal warrant analysis should be considered solely as an
"indicator" of the likelihood of an unsignalized intersection warranting
a traffic signal in the future.  Intersections that exceed this warrant
are probably more likely to meet one or more of the other volume based
signal warrant (such as the 4-hour or 8-hour warrants).

The peak hour warrant analysis in this report is not intended to replace
a rigorous and complete traffic signal warrant analysis by the responsible
jurisdiction.  Consideration of the other signal warrants, which is beyond
the scope of this software, may yield different results.
```

Milpitas Boulevard Extension Bridge

Level Of Service Computation Report
2000 HCM Unsignalized (Future Volume Alternative)
Cumulative + Project PM

Intersection #5: Montague Expressway/Sango Ct

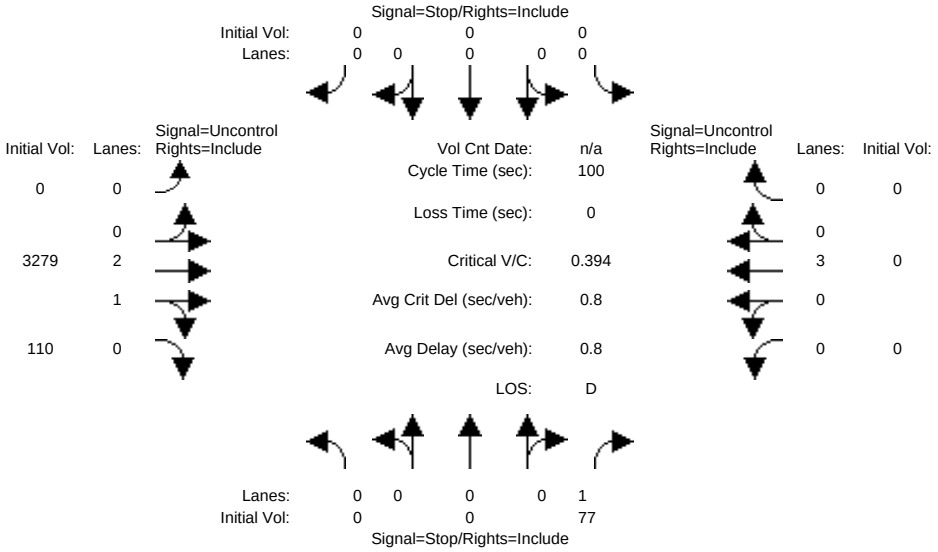


```
Street Name:              Sango Ct                    Montague Expressway
Approach:      North Bound      South Bound       East Bound       West Bound
Movement:     L  -  T  -  R    L  -  T  -  R    L  -  T  -  R    L  -  T  -  R
------------|---------------||---------------||---------------||---------------|
Volume Module:
Base Vol:       0    0    77     0    0     0     0 3279   110     0    0     0
Growth Adj:  1.00 1.00  1.00  1.00 1.00  1.00  1.00 1.00  1.00  1.00 1.00  1.00
Initial Bse:    0    0    77     0    0     0     0 3279   110     0    0     0
Added Vol:      0    0     0     0    0     0     0    0     0     0    0     0
PasserByVol:    0    0     0     0    0     0     0    0     0     0    0     0
Initial Fut:    0    0    77     0    0     0     0 3279   110     0    0     0
User Adj:    1.00 1.00  1.00  1.00 1.00  1.00  1.00 1.00  1.00  1.00 1.00  1.00
PHF Adj:     1.00 1.00  1.00  1.00 1.00  1.00  1.00 1.00  1.00  1.00 1.00  1.00
PHF Volume:     0    0    77     0    0     0     0 3279   110     0    0     0
Reduct Vol:     0    0     0     0    0     0     0    0     0     0    0     0
FinalVolume:    0    0    77     0    0     0     0 3279   110     0    0     0
------------|---------------||---------------||---------------||---------------|
Critical Gap Module:
Critical Gp:xxxxx xxxx   6.9 xxxxx xxxx xxxxx xxxxx xxxx xxxxx xxxxx xxxx xxxxx
FollowUpTim:xxxxx xxxx   3.3 xxxxx xxxx xxxxx xxxxx xxxx xxxxx xxxxx xxxx xxxxx
------------|---------------||---------------||---------------||---------------|
Capacity Module:
Cnflict Vol: xxxx xxxx  1148  xxxx xxxx xxxxx  xxxx xxxx xxxxx  xxxx xxxx xxxxx
Potent Cap.: xxxx xxxx   195  xxxx xxxx xxxxx  xxxx xxxx xxxxx  xxxx xxxx xxxxx
Move Cap.:   xxxx xxxx   195  xxxx xxxx xxxxx  xxxx xxxx xxxxx  xxxx xxxx xxxxx
Volume/Cap:  xxxx xxxx  0.39  xxxx xxxx  xxxx  xxxx xxxx  xxxx  xxxx xxxx  xxxx
------------|---------------||---------------||---------------||---------------|
Level Of Service Module:
2Way95thQ:   xxxx xxxx   1.7  xxxx xxxx xxxxx  xxxx xxxx xxxxx  xxxx xxxx xxxxx
Control Del:xxxxx xxxx  34.9 xxxxx xxxx xxxxx xxxxx xxxx xxxxx xxxxx xxxx xxxxx
LOS by Move:    *    *     D     *    *     *     *    *     *     *    *     *
Movement:     LT - LTR - RT    LT - LTR - RT    LT - LTR - RT    LT - LTR - RT
Shared Cap.: xxxx xxxx xxxxx  xxxx xxxx xxxxx  xxxx xxxx xxxxx  xxxx xxxx xxxxx
SharedQueue:xxxxx xxxx xxxxx xxxxx xxxx xxxxx xxxxx xxxx xxxxx xxxxx xxxx xxxxx
Shrd ConDel:xxxxx xxxx xxxxx xxxxx xxxx xxxxx xxxxx xxxx xxxxx xxxxx xxxx xxxxx
Shared LOS:     *    *     *     *    *     *     *    *     *     *    *     *
ApproachDel:      34.9           xxxxxx           xxxxxx           xxxxxx
ApproachLOS:         D                *                *                *
Note: Queue reported is the number of cars per lane.
                     Peak Hour Delay Signal Warrant Report
*******************************************************************************
Intersection #5 Montague Expressway/Sango Ct
*******************************************************************************
Future Volume Alternative: Peak Hour Warrant NOT Met
```

```
------------|---------------||---------------||---------------||---------------|
Approach:      North Bound      South Bound       East Bound       West Bound
Movement:     L  -  T  -  R    L  -  T  -  R    L  -  T  -  R    L  -  T  -  R
------------|---------------||---------------||---------------||---------------|
Control:        Stop Sign        Stop Sign       Uncontrolled     Uncontrolled
Lanes:        0  0  0  0  1    0  0  0  0  0    0  0  2  1  0    0  0  3  0  0
Initial Vol:    0    0    77     0    0     0     0 3279   110     0    0     0
ApproachDel:      34.9           xxxxxx           xxxxxx           xxxxxx
------------|---------------||---------------||---------------||---------------|
Approach[northbound][lanes=1][control=Stop Sign]
Signal Warrant Rule #1: [vehicle-hours=0.7]
   FAIL - Vehicle-hours less than 4 for one lane approach.
Signal Warrant Rule #2: [approach volume=77]
   FAIL - Approach volume less than 100 for one lane approach.
Signal Warrant Rule #3: [approach count=2][total volume=3466]
   SUCCEED - Total volume greater than or equal to 650 for intersection
             with less than four approaches.
--------------------------------------------------------------------------------
SIGNAL WARRANT DISCLAIMER
This peak hour signal warrant analysis should be considered solely as an
"indicator" of the likelihood of an unsignalized intersection warranting
a traffic signal in the future.  Intersections that exceed this warrant
are probably more likely to meet one or more of the other volume based
signal warrant (such as the 4-hour or 8-hour warrants).

The peak hour warrant analysis in this report is not intended to replace
a rigorous and complete traffic signal warrant analysis by the responsible
jurisdiction.  Consideration of the other signal warrants, which is beyond
the scope of this software, may yield different results.
                Peak Hour Volume Signal Warrant Report [Urban]
********************************************************************************
Intersection #5 Montague Expressway/Sango Ct
********************************************************************************
Future Volume Alternative: Peak Hour Warrant NOT Met
------------|---------------||---------------||---------------||---------------|
Approach:      North Bound      South Bound       East Bound       West Bound
Movement:     L  -  T  -  R    L  -  T  -  R    L  -  T  -  R    L  -  T  -  R
------------|---------------||---------------||---------------||---------------|
Control:        Stop Sign        Stop Sign       Uncontrolled     Uncontrolled
Lanes:        0  0  0  0  1    0  0  0  0  0    0  0  2  1  0    0  0  3  0  0
Initial Vol:    0    0    77     0    0     0     0 3279   110     0    0     0
------------|---------------||---------------||---------------||---------------|
Major Street Volume:             3389
Minor Approach Volume:           77
Minor Approach Volume Threshold: -136 [less than minimum of 100]
--------------------------------------------------------------------------------
SIGNAL WARRANT DISCLAIMER
This peak hour signal warrant analysis should be considered solely as an
"indicator" of the likelihood of an unsignalized intersection warranting
a traffic signal in the future.  Intersections that exceed this warrant
are probably more likely to meet one or more of the other volume based
signal warrant (such as the 4-hour or 8-hour warrants).

The peak hour warrant analysis in this report is not intended to replace
a rigorous and complete traffic signal warrant analysis by the responsible
jurisdiction.  Consideration of the other signal warrants, which is beyond
the scope of this software, may yield different results.
```

MITIGATION MONITORING AND REPORTING PROGRAM

South Milpitas Boulevard Bridge
File Nos. 201600
April 2024

PREFACE

Section 21081.6 of the California Environmental Quality Act (CEQA) requires a Lead Agency to adopt a Mitigation Monitoring and Reporting Program (MMRP) whenever it approves a project for which measures have been required to mitigate or avoid significant effects on the environment. The purpose of the monitoring and reporting program is to ensure compliance with the mitigation measures during project implementation.

The Initial Study prepared for the South Milpitas Boulevard Bridge project concluded that the proposed project, with implementation of the mitigation measures identified in the aforementioned Initial Study, would not result in significant effects on the environment. This MMRP addresses those measures in terms of how and when they will be implemented.

The Mitigation Measures described below, which have been developed in conjunction with the preparation of an Initial Study for the proposed project, will be implemented by the City of Milpitas Public Works Department. These mitigation measures or substantially similar measures are required to avoid or significantly reduce potential environmental impacts to a less than significant level, where feasible.

Signature: _____

Jay Lee, Planning Director, City of Milpitas

Date: _____

MITIGATION MEASURE	Method of Compliance Or Mitigation Action	Timing of Compliance	Enforcement and Monitoring Entity
AIR QUALITY			
MM AIR-3.1: The project shall implement the following Bay Area Air Quality Management District (BAAQMD) basic and additional construction mitigation measures during all applicable phases of construction: • All exposed surfaces (e.g., parking areas, staging areas, soil piles, graded areas, and unpaved access roads) shall be watered at a frequency adequate to maintain minimum soil moisture of 12 percent (i.e., three times a day). Moisture content shall be verified by lab samples or moisture probe. • All excavation, grading, and/or demolition activities shall be suspended when average wind speeds exceed 20 mph. • The simultaneous occurrence of excavation, grading, and ground-disturbing construction activities on the same area at any one time shall be phased to reduce the amount of disturbed surfaces at any one time. • Wind breaks (e.g., trees, fences) shall be installed on the windward side(s) of actively disturbed areas of construction. Wind breaks shall have at maximum 50 percent air porosity.	Mitigation measure MM AIR-3.1 shall be included on all construction drawings and provided to all project contractors and construction workers.	Prior to and during all phases of construction.	**Implementation:** City of Milpitas Public Works Department **Enforcement/Monitoring:** City of Milpitas Public Works Department.

MITIGATION MEASURE	Method of Compliance Or Mitigation Action	Timing of Compliance	Enforcement and Monitoring Entity
• Vegetative ground cover (e.g., fast-germinating native grass seed) shall be planted in disturbed areas as soon as possible and watered appropriately until vegetation is established. • All roadways, driveways, and sidewalks to be paved shall be completed as soon as possible. Building pads shall be laid as soon as possible after grading unless seeding or soil binders are used. • All vehicle speeds on unpaved roads shall be limited to 15 mph. • All haul trucks transporting soil, sand, or other loose material off-site shall be covered. • Site accesses to a distance of 100 feet from the paved road shall be treated with a six to 12-inch compacted layer of wood chips, mulch, or gravel. • All trucks and equipment, including their tires, shall be washed off prior to leaving the site. • All visible mud or dirt track-out onto adjacent public roads shall be removed using wet power vacuum street sweepers at least once per day. The use of dry power sweeping is prohibited. • Sandbags or other erosion control measures shall be installed to prevent silt runoff to public roadways from sites with a slope greater than one percent. • Idling times shall be minimized either by shutting equipment off when not in use or reducing the			

MITIGATION MEASURE	Method of Compliance Or Mitigation Action	Timing of Compliance	Enforcement and Monitoring Entity
maximum idling time to two minutes (as required by the California airborne 14 toxics control measure Title 13, Section 2485 of California Code of Regulations [CCR]). Clear signage shall be provided for construction workers at all access points. • All construction equipment shall be maintained and properly tuned in accordance with manufacturer's specifications. All equipment shall be checked by a certified mechanic and determined to be running in proper condition prior to operation. • Post a publicly visible sign with the telephone number and person to contact at the Lead Agency regarding dust complaints. This person shall respond and take corrective action within 48 hours. BAAQMD's phone number shall also be visible to ensure compliance with applicable regulations.			
MM AIR-3.2: The project shall develop a plan demonstrating that the off-road equipment used on-site to construct the project would achieve a fleet-wide average 86 percent reduction in diesel particulate matter (DPM) exhaust emissions or greater. • All diesel-powered off-road equipment, larger than 25 horsepower, operating on the site for more than two days continuously shall, at a minimum, meet	Mitigation measure MM AIR-3.2 shall be included on all construction drawings and provided to all project contractors. The City of Milpitas Public Works Department shall	Prior to commencement of construction activities.	**Implementation:** City of Milpitas Public Works Department **Enforcement/Monitoring:** City of Milpitas Public Works Department.

MITIGATION MEASURE	Method of Compliance Or Mitigation Action	Timing of Compliance	Enforcement and Monitoring Entity
U.S. Environmental Protection Agency (EPA) particulate matter emissions standards for Tier 4 Final engines. • Where Tier 4 equipment is not available, all construction equipment larger than 25 horsepower used at the site for more than two continuous days shall meet U.S. EPA emissions standards for Tier 3 engines and include California Air Resources Board-certified Level 3 Diesel Particulate Filters or equivalent that altogether achieves a 86 percent reduction in exhaust emissions. Equipment that is electrically powered or uses non-diesel fuels would also meet this requirement.	submit the emissions reduction plan to the Director of Planning for verification and approval. Contractors shall verify that the off-road equipment used in construction complies with the restrictions outlined in the approved emissions reduction plan.		
BIOLOGICAL RESOURCES			
MM BIO-1.1: Worker Environmental Awareness Program. All construction personnel working on the bridge will participate in a worker environmental awareness program. These personnel will be informed about the potential presence of native fish and northwestern pond turtles within and downstream from the project site. Prior to construction activities, a qualified biologist will instruct all construction personnel about (1) the description and status of these species; (2) the importance of their associated habitats; (3) a list of measures being taken to reduce impacts on	Mitigation measure MM BIO-1.1 shall be included on all construction drawings and provided to all project contractors. A qualified biologist will implement project Worker Environmental Awareness Training, as outlined in mitigation measure MM	Prior to construction.	**Implementation:** City of Milpitas Public Works Department **Enforcement/Monitoring:** City of Milpitas Public Works Department.

MITIGATION MEASURE	Method of Compliance Or Mitigation Action	Timing of Compliance	Enforcement and Monitoring Entity
these species during project construction; and (4) procedures to be followed if a northwestern pond turtle is observed by construction personnel in or near the project area during construction. If construction personnel observe any turtle in an area where it is at risk of injury or mortality due to the project, or where construction activity could prevent the turtle from returning to perennial habitat downstream from the project site, they will contact a qualified biologist immediately. All project activities that could impact the turtle will stop until the biologist has arrived at the site and determined whether the turtle is a northwestern pond turtle and (with any necessary USFWS approval) relocated the turtle to an appropriate location downstream.	BIO-1.1, and provide written verification to the City of Milpitas Department of Planning upon completion.		
MM BIO-1.2: Preconstruction Survey and Fish Exclusion Prior to Dewatering Activities. Prior to conducting dewatering activities, a qualified biologist will conduct a survey of the project area to look for fish and northwestern pond turtles. If any northwestern pond turtles are detected in areas where they are at risk of injury or mortality due to the project, or where construction activity could prevent the turtles from returning to perennial habitat downstream from the project site, the biologist will relocate the turtles to suitable habitat in the perennial reach of Penitencia East	Mitigation measure MM BIO-1.2 shall be included on all construction drawings and provided to all project contractors. A qualified biologist will conduct a preconstruction survey to look for fish and northwestern pond turtles and provide written findings	Prior to conducting dewatering activities.	**Implementation:** City of Milpitas Public Works Department **Enforcement/Monitoring:** City of Milpitas Public Works Department.

MITIGATION MEASURE	Method of Compliance Or Mitigation Action	Timing of Compliance	Enforcement and Monitoring Entity
Channel downstream. If northwestern pond turtle has been listed by the USFWS under FESA by the time construction occurs, the biologist will handle/relocate individual turtles only with USFWS approval. During the preconstruction survey, the biologist will determine whether there is any potential for native fish to be present in the project area based on presence/absence and depth of water. If any fish are or have the potential to be present in the on-site segment of creek channel, and if continuous flow is present from the project site downstream to the perennial reach of creek, the biologist will use block nets to exclude fish from the reach to be dewatered. A block net will be placed at the upper end of the reach to be dewatered. Subsequently, qualified biologists will walk from the upper to lower end of the reach with a seine stretched across the channel to encourage fish to move out of the construction area. When the lower end of the construction area is reached, a second block net will be installed to isolate the construction reach. This procedure will be repeated as needed until no fish remain in the construction area. If surface water is not continuous between the project site and the perennial reach downstream, so that fish excluded from the site are unable to reach suitable habitat downstream, then	of the survey to the City of Milpitas Department of Planning upon completion.		

MITIGATION MEASURE	Method of Compliance Or Mitigation Action	Timing of Compliance	Enforcement and Monitoring Entity
the qualified biologist will capture native fish using appropriate methods and immediately release them in the perennial reach of the channel downstream.			
MM BIO-1.3: Maintenance of Flow through the Site. In the unlikely event that fish are present within the channel when construction occurs, continuous flow will be maintained through the project site (e.g., in a temporary pipe) so that any fish upstream from the site are able to disperse downstream.	Mitigation measure MM BIO-1.3 shall be included on all construction drawings and provided to all project contractors. If fish are present within the channel at the time of dewatering, it will be documented in written survey findings provided to the City of Milpitas Department of Planning under mitigation measure MM BIO-1.2 and continuous flow will be maintained.	During dewatering.	**Implementation:** City of Milpitas Public Works Department **Enforcement/Monitoring:** City of Milpitas Public Works Department.
MM BIO-1.4: Minimization and Shielding of Lighting. All lighting for vehicular and pedestrian safety shall be minimized to the extent feasible (i.e., shall be no brighter than necessary for safety purposes), shall be oriented toward the bridge rather than outwards toward the Penitencia East Channel, and shall be fully	Mitigation measure MM BIO-1.4 shall be included on all construction drawings and provided to all project contractors.	Prior to lighting installation.	**Implementation:** City of Milpitas Public Works Department

MITIGATION MEASURE	Method of Compliance Or Mitigation Action	Timing of Compliance	Enforcement and Monitoring Entity
shielded to block illumination from shining upward or outward toward the creek channel.	A lighting plan shall be prepared for the proposed bridge lighting documenting the lighting will meet the requirements under mitigation measure MM BIO-1.4. The lighting plan shall be submitted to the City of Milpitas Department of Planning for verification and approval.		**Enforcement/Monitoring:** City of Milpitas Public Works Department.
MM BIO-1.5: Review of the Lighting Plan. The lighting plan shall be reviewed by a qualified biologist prior to construction to ensure that the level of lighting would not result in adverse effects on wildlife in adjacent areas or attracting/disorienting nocturnal migrant birds.	Mitigation measure MM BIO-1.5 shall be included on all construction drawings and provided to all project contractors. The lighting plan required under mitigation measure MM BIO-1.4 shall be reviewed by a qualified biologist and the biologist	Prior to lighting installation.	**Implementation:** City of Milpitas Public Works Department **Enforcement/Monitoring:** City of Milpitas Public Works Department.

MITIGATION MEASURE	Method of Compliance Or Mitigation Action	Timing of Compliance	Enforcement and Monitoring Entity
	will provide written review findings to the City of Milpitas Department of Planning.		
MM BIO-1.6: In conformance with Milpitas Metro Specific Plan (MMSP) Special Conditions (SC) Policy SC 9.1, the following project-specific measures would be implemented to avoid impacts to nesting birds during construction and ensure compliance with the Migratory Bird Treaty Act (MBTA) and California Fish and Game Code: • Construction activities shall be avoided during the nesting season (i.e., February 1 through August 31). • Potential nesting substrate (e.g., bushes, trees, snags, grass, and suitable artificial surfaces) that would be impacted by development shall be removed during the non-breeding season (i.e., September 1 through January 31), to preclude nesting in the study area. • If it is not feasible to schedule construction activities during the non-breeding season, preconstruction surveys for nesting birds shall be conducted by a qualified ornithologist to ensure that no nests will be disturbed during construction activities. This survey shall be conducted no more	Mitigation measure MM BIO-1.6 shall be included on all construction drawings and provided to all project contractors. If construction activities cannot be scheduled outside of nesting season, the City of Milpitas Public Works Department shall hire a qualified ornithologist to conduct nesting bird surveys no more than seven days prior to the initiation of construction activities and implement the measures outlined in mitigation measure MM BIO-1.6 should active nests be disturbed by project construction activities.	Prior to construction.	**Implementation:** City of Milpitas Public Works Department **Enforcement/Monitoring:** City of Milpitas Public Works Department.

MITIGATION MEASURE	Method of Compliance Or Mitigation Action	Timing of Compliance	Enforcement and Monitoring Entity
than seven days prior to the initiation of construction activities. During this survey, the ornithologist shall inspect all trees, shrubs, and other potential nesting habitats in and immediately adjacent to the study area for nests. If an active nest is found sufficiently close to work areas to be disturbed by these activities, the ornithologist shall determine the extent of a buffer zone to be established around the nest, typically 300 feet for raptors and 100 feet for other birds, to ensure that no nests of species protected by the MBTA or the California Fish and Game Code will be disturbed during construction activities.	The qualified biologist will provide written findings of the survey and any necessary buffer zones to the City of Milpitas Department of Planning upon completion.		
MM BIO-2.1: Work Period. Construction work within the stream banks shall be restricted to the period of April 15 to October 15 (or as otherwise allowed by resource agency permits). Riparian restoration work (refer to MM BIO-2.4 below) using hand tools shall be completed within the wet season the same year following completion of the project.	Mitigation measure MM BIO-2.1 shall be included on all construction drawings and provided to all project contractors. The City of Milpitas Public Works Department shall not allow construction outside of April 15 to October 15.	Prior to and after construction.	**Implementation:** City of Milpitas Public Works Department **Enforcement/Monitoring:** City of Milpitas Public Works Department.

MITIGATION MEASURE	Method of Compliance Or Mitigation Action	Timing of Compliance	Enforcement and Monitoring Entity
	The City's Public Works Department will ensure mitigation measure MM BIO-2.4 is implemented during the wet season (October 15 to April 15).		
MM BIO-2.2: Work Area Delineation. Permittee shall clearly show all riparian habitat on project plan sets and place flagging around the work limits within the stream, riparian, and wetland areas to prevent inadvertent impacts to areas not proposed to be disturbed by the project. Flagging shall be removed and appropriately disposed of within five calendar days of the completion of construction work. Access paths and staging areas shall be adequately fenced or flagged during the construction period to prevent damage to adjacent stream, riparian or wetland habitat.	Mitigation measure MM BIO-2.2 shall be included on all construction drawings and provided to all project contractors. The City of Milpitas Public Works Department shall ensure all riparian habitat is shown on project plan sets and the work limits, staging areas, and access paths are flagged or fenced.	Prior to and during construction. Flagging shall be removed within five calendar days of the completion of construction work.	**Implementation:** City of Milpitas Public Works Department **Enforcement/Monitoring:** City of Milpitas Public Works Department.
MM BIO-2.3: Prevention of Spread of Invasive Plant Species. To prevent the spread of invasive weed infestations, • All ground disturbing equipment used within the riparian corridors shall be washed (including tracks, and undercarriages) at a legally operating	Mitigation measure MM BIO-2.3 shall be included on all construction drawings and provided to all project contractors and construction workers.	Prior to and during construction. Monitoring shall occur for the first three years after planting.	**Implementation:** City of Milpitas Public Works Department

MITIGATION MEASURE	Method of Compliance Or Mitigation Action	Timing of Compliance	Enforcement and Monitoring Entity
equipment yard both before and after being used at the site. • All applicable construction materials used on-site, such as straw wattles, mulch, and fill material, shall be certified weed free. • Invasive plant species with a "high" ecosystem impact rating by the California Invasive Plant Council (Cal-IPC; http://www.cal-ipc.org/paf/) shall be actively monitored and controlled in the first three years following planting. The percent cover of "high" invasive plant species shall be maintained at less than ten percent of the total plant cover in areas disturbed by project work. A qualified ecologist shall assess the type, distribution, and abundance of invasive plant species and recommend effective control measures. Invasive plants shall be removed from the project site on an as-needed basis.	The City of Milpitas Public Works Department will ensure mitigation measure MM BIO-2.3 is implemented and will contract with a qualified ecologist to monitor and control invasive species and provide compliance documentation to City of Milpitas Department of Planning.		**Enforcement/Monitoring:** City of Milpitas Public Works Department.
MM BIO-2.4: Revegetation of Temporary Impact Areas. Temporary impact areas within the bed and banks of the channel shall be restored to preconstruction conditions or better. Restoration shall include restoring the topography of temporary impact areas to preconstruction conditions to the extent feasible, bank stabilization, and reestablishment of appropriate vegetation. A habitat-appropriate, weed-free native seed mix or propagated plants shall be	Mitigation measure MM BIO-2.4 shall be included on all construction drawings and provided to all project contractors and construction workers.	Prior to and after construction. The project site shall be monitored and maintained for a minimum of three years, or until the success criteria is attained for vegetation cover. Monitoring and maintenance may be extended if the success	**Implementation:** City of Milpitas Public Works Department **Enforcement/Monitoring:** City of Milpitas Public Works Department.

MITIGATION MEASURE	Method of Compliance Or Mitigation Action	Timing of Compliance	Enforcement and Monitoring Entity
applied or installed. The species composition shall be developed in coordination with Valley Water. The project proponent shall not plant, seed, or otherwise introduce invasive exotic plant species. Revegetation shall be completed as soon as possible after grading at the project site is completed. Seeding placed between October 15 and April 15 shall be covered with broadcast straw, jute netting, coconut fiber blanket, or similar erosion control blanket. Erosion control products with monofilament or woven plastic strands shall not be used. The revegetation will be considered successful if the vegetative cover in the temporary impact areas reaches 75% of the existing baseline cover, excluding species rated as "high" by Cal-IPC. A qualified ecologist will monitor conditions in the temporary riparian and stream/marsh impact areas for a minimum of 3 years, or until the success criteria for vegetation cover are attained, whichever is later. Prior to commencement of construction, the ecologist will establish at least four permanent photographic documentation stations (i.e., one station near each corner of the bridge) to provide representative views of vegetation cover. The locations of the photographic documentation stations will be recorded using a GPS, and the direction of the photographs documented with	Prior to construction, the City's Public Works Department shall contract with a qualified biologist to document the preconstruction conditions on and adjacent to the project site and restore. Following construction, the Public Works Department shall contract with a qualified biologist to complete the habitat restoration activities and post-construction documentation, monitoring, maintenance, and remediation (if warranted) activities outlined in mitigation measure MM BIO-2.4.	criteria is not attained by year three.	

MITIGATION MEASURE	Method of Compliance Or Mitigation Action	Timing of Compliance	Enforcement and Monitoring Entity
a compass. The ecologist will prepare site maps with the photo-documentation points clearly marked for the project site. Prior to commencement of construction, the ecologist will photographically document the pre-project condition of the project site from each documentation station and estimate the vegetation cover at each station. Following implementation of the project, including any seeding or plant installation, a qualified ecologist will visit the site at least once in late spring to photographically document the postconstruction condition of the project site and estimate vegetation cover. The ecologist will report the results of these inspections (including the assessment of overall vegetation cover described in this measure and the assessment of invasive plants described in MM BIO-2.3) in a brief memo following each year's site visit. Monitoring and maintenance may be extended if the success criteria are not attained by year 3. Remedial measures to be considered include, but are not limited to, supplemental planting or seeding, increased maintenance frequency, increased invasive plant removal activities, or alteration of maintenance strategies.			
CULTURAL RESOURCES			

MITIGATION MEASURE	Method of Compliance Or Mitigation Action	Timing of Compliance	Enforcement and Monitoring Entity
MM CUL-2.1: Prior to the issuance of any grading permits, the project applicant shall retain a qualified archaeologist and engage a Native American monitor approved by Tamien Nation to be present at the site during all ground disturbing activities. Submit a copy of the agreement to the Director of Engineering or the Director's designee.	Mitigation measure MM CUL-2.1 shall be included on all construction drawings and provided to all project contractors and construction workers. Prior to issuance of any grading permits, the City's Public Works Department shall contract with a qualified archaeologist and Native American monitor approved by Tamien Nation to present on the site during all ground disturbing activities.	Prior to the issuance of any grading permits and during construction.	**Implementation:** City of Milpitas Public Works Department **Enforcement/Monitoring:** City of Milpitas Public Works Department.
MM CUL-2.2: Pursuant to CEQA Guidelines 15064.5 (f), if potentially significant cultural resources are discovered during ground-disturbing activities associated with project preparation, construction, or completion, work shall halt in that area until a qualified archaeologist can assess the significance of the find, and, if necessary, develop appropriate treatment measures in consultation with Santa Clara County, Tamien Nation, and other appropriate agencies and interested parties. If such resources are found to be	Mitigation measure MM CUL-2.2 shall be included on all construction drawings and provided to all project contractors and construction workers. If potentially significant archaeological resources are discovered during ground-disturbing activities	Prior to and during construction.	**Implementation:** City of Milpitas Public Works Department **Enforcement/Monitoring:** City of Milpitas Public Works Department.

MITIGATION MEASURE	Method of Compliance Or Mitigation Action	Timing of Compliance	Enforcement and Monitoring Entity
Native American, the treatment measures shall obtain approval from Tamien Nation. A qualified archaeologist shall follow accepted professional standards in recording any find including submittal of the standard Department of Parks and Recreation (DPR) Primary Record forms (Form DPR 523) and locational information to the California Historical Resources Information Center office (Northwest Information Center). The consulting archaeologist shall also evaluate such resources for significance per California Register of Historical Resources eligibility criteria (Public Resources Code Section 5024.1; Title 14 CCR Section 4852). If the archaeologist determines that the find does not meet the CEQA standards of significance, construction shall proceed. In the event the archaeologist determines that further information is needed to evaluate significance, the Engineering Department staff shall be notified and a data recovery plan shall be prepared. If such resources are found to be Native American, a Tamien Nation Tribal representative shall be engaged for evaluation and the data recovery plan shall be prepared in consultation with Tamien Nation.	mitigation measure MM CUL-2.2 shall be implemented.		

MITIGATION MEASURE	Method of Compliance Or Mitigation Action	Timing of Compliance	Enforcement and Monitoring Entity
MM CUL-3.1: In the event that human remains are encountered, the City shall halt work in the immediate area and contact the Santa Clara County coroner. The coroner will make a determination as to whether the remains are Native American. If the remains are believed to be Native American, the coroner will contact the Native American Heritage Commission (NAHC) which will designate the Most Likely Descendants (MLD). The MLD will inspect the remains and make a recommendation for the respectful treatment of the remains and related burial goods.	Mitigation measure MM CUL-3.1 shall be included on all construction drawings and provided to all project contractors and construction workers. If any human remains are discovered during construction, the City shall halt work in the immediate area and implement mitigation measure MM CUL-3.1.	During construction.	**Implementation:** City of Milpitas Public Works Department **Enforcement/Monitoring:** City of Milpitas Public Works Department.
GEOLOGY AND SOILS			
MM GEO-6.1: A qualified paleontologist shall attend a preconstruction meeting to ensure construction workers are able to identify potential paleontological resources. In the event fossils are encountered, construction shall be temporarily halted. The City's Engineering Department shall be notified immediately, a qualified paleontologist shall evaluate the fossils, and steps needed to photo document and recover the fossils shall be taken.	Mitigation measure MM GEO-6.1 shall be included on all construction drawings and provided to all project contractors and construction workers. A qualified paleontologist shall attend a preconstruction meeting to ensure construction workers	Prior to construction.	**Implementation:** City of Milpitas Public Works Department **Enforcement/Monitoring:** City of Milpitas Public Works Department.

MITIGATION MEASURE	Method of Compliance Or Mitigation Action	Timing of Compliance	Enforcement and Monitoring Entity
	are able to identify paleontological resources. In the event fossils are encountered during construction, mitigation measure MM GEO-6.1 shall be implemented.		
HAZARDS AND HAZARDOUS MATERIALS			
MM HAZ-2.1: Prior to demolition and grading, a Risk Management Plan (RMP) shall be prepared to protect the health and safety of construction workers and site users adjacent to construction activities. The RMP shall be implemented during all phases of construction and shall include engineering controls, monitoring, and security measures to prevent unauthorized entry to the construction site and to reduce hazards outside of the construction site. The RMP shall address the possibility of encountering subsurface hazards and include procedures to protect workers and the public. The RMP shall also include procedures for managing soils and groundwater removed from the site to ensure that any excavated soils and/or dewatered groundwater with contaminants are stored, managed, and disposed of in accordance with applicable regulations and permits. Protocols for the handling, transport, and disposal of	Mitigation measure MM HAZ-2.1 shall be included on all construction drawings and provided to all project contractors and construction workers. The City of Milpitas Public Works Department shall prepare and implement a Risk Management Plan (RMP) for the project in accordance with mitigation measure MM HAZ-2.1.	Prior to and during construction.	**Implementation:** City of Milpitas Public Works Department **Enforcement/Monitoring:** City of Milpitas Public Works Department.

MITIGATION MEASURE	Method of Compliance Or Mitigation Action	Timing of Compliance	Enforcement and Monitoring Entity
both known and previously unidentified hazardous materials that may be encountered during project development shall be specified. If prescribed exposure levels are exceeded, personal protective equipment shall be required for workers in accordance with Occupational Safety and Health Administration (OSHA) regulations. Finally, the RMP shall also include procedures for the use, storage, disposal, of hazardous materials used during construction activities to prevent the accidental release of these materials into the environment during construction.			
MM HAZ-2.2: To reduce the potential for construction workers and nearby sensitive receptor to be exposed to hazardous materials (asbestos containing materials [ACMs] and lead-based paint), the following measures shall be implemented: • In conformance with state and local laws, a visual inspection/pre-demolition survey, and possible sampling, shall be conducted prior to the demolition of on-site building(s) to determine the presence of asbestos-containing materials and/or lead-based paints. • Prior to demolition activities, all building materials containing lead-based paint shall be removed in accordance with the California Division of	Mitigation measure MM HAZ-2.2 shall be included on all construction drawings and provided to all project contractors and construction workers. Prior to and during construction, the City of Public Works Department shall complete the hazardous material sampling and removal in accordance with mitigation measure MM HAZ-2.2.	Prior to and during construction.	**Implementation:** City of Milpitas Public Works Department **Enforcement/Monitoring:** City of Milpitas Public Works Department.

MITIGATION MEASURE	Method of Compliance Or Mitigation Action	Timing of Compliance	Enforcement and Monitoring Entity
Occupational Safety and Health Lead in Title 8, California Code of Regulations, Section 1532.1, including employee training, employee air monitoring, and dust control. Any debris or soil containing lead-based paint or coatings shall be disposed of at landfills that meet acceptance criteria for the type of lead being disposed. • All potentially friable asbestos-containing materials shall be removed in accordance with National Emission Standards for Hazardous Air Pollutants guidelines prior to demolition or renovation activities that may disturb asbestos-containing materials. All demolition activities shall be undertaken in accordance with the California Division of Occupational Safety and Health standards contained in Title 8, California Code of Regulations, Section 1529, to protect workers from asbestos exposure. • A registered asbestos abatement contractor shall be retained to remove and dispose of asbestos-containing materials identified in the asbestos survey performed for the site in accordance with the standards stated above. • Materials containing more than one-percent asbestos are also subject to Bay Area Air Quality Management District regulations. Removal of			

MITIGATION MEASURE	Method of Compliance Or Mitigation Action	Timing of Compliance	Enforcement and Monitoring Entity

materials containing more than one-percent asbestos shall be completed in accordance with Bay Area Air Quality Management District requirements and notifications.
• Based on California Division of Occupational Safety and Health rules and regulations, the following conditions are required to limit impacts to construction workers.
  o Prior to commencement of demolition activities, a building survey, including sampling and testing, shall be completed to identify and quantify building materials containing lead-based paint.
  o During demolition activities, all building materials containing lead-based paint shall be removed in accordance with the California Division of Occupational Safety and Health Lead in Construction Standard, Title 8, California Code of Regulations, Section 1532.1, including employee training, employee air monitoring and dust control.
  o Any debris or soil containing lead-based paint or coatings shall be disposed of at landfills that meet acceptance criteria for the type of waste being disposed.			

Source: City of Milpitas. *South Milpitas Boulevard Bridge Initial Study*. April 2024.

Print Form

Notice of Determination

Appendix D

To:

☒ Office of Planning and Research

U.S. Mail:	*Street Address:*
P.O. Box 3044	1400 Tenth St., Rm 113
Sacramento, CA 95812-3044	Sacramento, CA 95814

☒ County Clerk
County of: Santa Clara
Address: 110 West Tasman Drive, 1st Floor
San Jose, CA 95134

From:
Public Agency: City of Milpitas
Address: 455 E. Calaveras Boulevard
Milpitas, CA 95035
Contact: Lyhak Eam, P.E., Principal Civil Engine
Phone: (408) 586-3349

Lead Agency (if different from above):

Address:

Contact:
Phone:

SUBJECT: Filing of Notice of Determination in compliance with Section 21108 or 21152 of the Public Resources Code.

State Clearinghouse Number (if submitted to State Clearinghouse): 2024021227

Project Title: SOUTH MILPITAS BOULEVARD BRIDGE PROJECT

Project Applicant: CITY OF MILPITAS

Project Location (include county): CITY OF MILPITAS, COUNTY OF SANTA CLARA

Project Description:

The project proposes to construct a bridge across Penitencia East Channel to connect South Milpitas Boulevard on the north side of the channel with a new connector street to be constructed between Tarob Court and Sango Court on the south side of the channel. The proposed bridge would serve vehicles, pedestrians, and cyclists. The project would require demolition of the existing vacant office building located at 1831-1841 Tarob Court (APN 086-36-030), which is owned by the City of Milpitas.

This is to advise that the CITY OF MILPITAS has approved the above
(☒ Lead Agency or ☐ Responsible Agency)

described project on _____ and has made the following determinations regarding the above
(date)
described project.

1. The project [☐ will ☒ will not] have a significant effect on the environment.
2. ☐ An Environmental Impact Report was prepared for this project pursuant to the provisions of CEQA.
   ☒ A Negative Declaration was prepared for this project pursuant to the provisions of CEQA.
3. Mitigation measures [☒ were ☐ were not] made a condition of the approval of the project.
4. A mitigation reporting or monitoring plan [☒ was ☐ was not] adopted for this project.
5. A statement of Overriding Considerations [☐ was ☒ was not] adopted for this project.
6. Findings [☐ were ☒ were not] made pursuant to the provisions of CEQA.

This is to certify that the final EIR with comments and responses and record of project approval, or the negative Declaration, is available to the General Public at:
https://www.milpitas.gov/379/ Environmental-Documents-CEQA

Signature (Public Agency): _____ Title: _____

Date: _____ Date Received for filing at OPR: _____

Authority cited: Sections 21083, Public Resources Code.
Reference Section 21000-21174, Public Resources Code.

Revised 2011

NOTICE OF INTENT TO ADOPT A MITIGATED NEGATIVE DECLARATION FOR THE SOUTH MILPITAS BOULEVARD BRIDGE PROJECT

NOTICE IS HEREBY GIVEN that the City of Milpitas (City) has completed an Initial Study/Mitigated Negative Declaration (IS/MND) for the proposed South Milpitas Boulevard Bridge Project in accordance with the California Environmental Quality Act (CEQA).

Project Location: The project is located within the Milpitas Transit Area Specific Plan in the City of Milpitas at the southern terminus of South Milpitas Boulevard and includes portions of Assessor's Parcel Numbers (APNs) 086-36-030, 086-36-041, 086-37-018, 086-37-039, and 086-37-040.

Proposed Project: The project proposes to construct a bridge across Penitencia East Channel to connect South Milpitas Boulevard on the north side of the channel with a new connector street to be constructed between Tarob Court and Sango Court on the south side of the channel. The proposed bridge would serve vehicles, pedestrians, and cyclists. The project would require demolition of the existing vacant office building located at 1831-1841 Tarob Court (APN 086-36-030), which is owned by the City of Milpitas.

Findings: The Initial Study prepared by the City was undertaken for the purpose of deciding whether the proposed project may have a significant effect on the environment. On the basis of the Initial Study, City staff have concluded that the proposed project with implementation of the mitigation measures identified in the Initial Study will not have a significant effect on the environment and, therefore, have prepared a Mitigated Negative Declaration. The Initial Study has incorporated all the relevant information regarding the potential environmental effects of the project and confirms the determination that an Environmental Impact Report (EIR) is not required for the project.

Cortese List Designation: The proposed project site is on a list of hazardous material sites compiled pursuant to Government Code section 65962.5 (Cortese List). According to GeoTracker, the parcel (APN 086-36-030) at 1831-1841 Tarob Court has been identified as an Open Cleanup Site as a result of soil and groundwater contamination from past activities associated with circuit board manufacturing from 1979 to 2015. In 2019, approximately 75.0 cubic yards of contaminated soil was excavated at the project site along a storm drain line where secondary source TCE risk-based thresholds were exceeded. An additional 64.8 cubic yards were removed with an associated sump pump. In 2020, a Risk Management Plan was established identifying contamination locations, soil and groundwater management requirements for future earthwork, and requirements for future development projects. A deed restriction was applied to the property to limit uses as a roadway or open-air park due to the presence of contaminated soil, soil vapors, and groundwater. The Regional Water Quality Control Board (RWQCB) concluded that with the completed remediation activities and limitation of future land uses, the subject parcel does not require further active remediation. As set forth in the Initial Study, with the implementation of mitigation measures, the South Milpitas Boulevard Bridge project will have a less than significant impact relating to hazards and hazardous materials.

Public Review: The IS/MND is available for review online at https://www.milpitas.gov/379/Environmental-Documents-CEQA. To review a hard copy of the IS/MND, please contact Lyhak Eam at the email address or phone number listed below, and accommodation will be provided to review the IS/MND during the City's normal working hours at the following address:

Milpitas City Hall
455 E. Calaveras Boulevard
Milpitas, CA 95035

Written comments will be accepted from March 1, 2024, to April 1, 2024. Comments will also be accepted at the City Council Meeting on May 7, 2024. Comments from all Responsible Agencies and interested parties are requested. Any person wishing to comment on the Draft IS/MND must either make verbal comments at the City Council Meeting or submit written comments to the following address:

Lyhak Eam, P.E., Principal Civil Engineer
455 E. Calaveras Boulevard
Milpitas, CA 95035
Tel: (408) 586-3349
Leam@milpitas.gov

If you require additional accommodation to review the IS/MND, please contact Lyhak Eam at the email address or phone number listed above.

DocuSign Envelope ID: 4D7FA633-E3C3-4907-9921-9783EA0BF068

File: 32980
Penitencia East Channel

March 29, 2024

Lyhak Eam, P.E.
City of Milpitas
455 East Calaveras Boulevard
Milpitas, CA 95035

Subject: Initial Study / Mitigated Negative Declaration for South Milpitas Boulevard Bridge

Dear Lyhak Eam:

The Santa Clara Valley Water District (Valley Water) has reviewed the Initial Study / Mitigated Negative Declaration (IS/MND) for the South Milpitas Boulevard Bridge, received on March 4, 2024.

1. Valley Water owns fee title property along Penitencia East Channel where the bridge is proposed to be located. Any work on Valley Water's fee title property will require the issuance of a Valley Water encroachment permit as per Valley Water's Water Resources Protection Ordinance. Issuance of an encroachment permit and sale of a permanent easement for the bridge are discretionary acts and require Valley Water to be considered a responsible agency under CEQA.
2. The appendices referenced in the document were not provided in the link provided on the City's website for the IS/MND. Please provide copies of the appendices referenced in the Biological Resources and Hydrology and Water Quality sections for our review.
3. **Page 7, Section 2.7.2, Responsible Agency:** Construction of the South Milpitas Boulevard Bridge will only require a Valley Water encroachment permit and not a Joint Use Agreement.
4. **Page 9,** Figure 3.2-1 shows that utilities are proposed to be installed on both the upstream and downstream faces of the bridge. Utilities are to be placed on the downstream face of the bridge only.
5. **Page 11, Section 3.2.3, Right-of-Way and Temporary Construction Easements**: This section should identify the permanent easements required to be dedicated to Valley Water for re-alignment of Valley Water's existing maintenance roads along the north and south banks of the creek impacted by the bridge construction.
6. **Page 13, Section 3.2.4, Construction:** The discussion on page 13 regarding temporary work in the creek notes that work can only occur in the creek between June 15 and October 15 due to Valley Water requirements. Valley Water generally does not allow obstructions in the creek during the rainy season, April 15 and October 15. The CA Department of Fish and Wildlife, Regional Water Quality Control Board and Army Corps of Engineers permits for the project may define their own work windows, which may be more restrictive, in which the creek diversion, temporary falsework, etc. may occur in the creek.

DocuSign Envelope ID: 4D7FA633-E3C3-4907-9921-9783EA0BF068

7. **Page 55, Impact BIO-2, Paragraph 1:** The discussion on page 55 regarding waters of the US and State is not clear or consistent. The text states that Waters of the US and State occur up to the OHW and then states Waters of the State would occur to the top of bank which is not the same as OHW. Please revise the text for accuracy and consistency.
8. **Page 55, Impact BIO-2, Paragraph 2:** The document notes that 0.02 acres of riparian annual grasslands will be permanently impacted by the project; however, this section does not include any mitigation measures for this permanent impact. Measures to mitigate for the permanent impacts need to be discussed and mitigation measures proposed. Please note that mitigation for non-Valley Water projects such as this project is not allowed on Valley Water property.
9. **Page 57, MM BIO-2.4:** Page 57 states that work within the creek would occur between April 15 and October 15; however, page 13 notes work would only occur between June 15 and October 15.
10. **Page 58, Impact BIO-3:** The document notes there will be a permanent impact of 0.01 acres to intermittent stream/freshwater marsh and that mitigation is provided for as discussed under BIO-2. However, as noted above the mitigation measures identified under BIO-2 do not address the permanent impacts to riparian habitat.
11. **Page 45, Section 4.4.1.2, Existing Conditions, Riparian Annual Grassland:** The ordinary high-water mark (OHWM) should be defined.
12. **Page 56, MM BIO-2.4, Revegetation of Temporary Impact Areas:** Plantings installed to restore Valley Water's property must be approved by Valley Water in accordance with the Water Resources Protection Manual, including use of locally native riparian species grown from propagules collected in the Penitencia Creek watershed. The plant species included in the proposed seed mix do not match the riparian grassland or intermittent stream habitats that will be impacted. Additionally, the use of coyote brush and California buckwheat are woody species not appropriate for use on the inboard slopes of flood control channels.
13. **Page 104, Municipal Regional Permit Provisions C.3:** The document should reference the latest San Francisco Bay Regional Water Quality Control Board (RWQCB) National Pollutant Discharge Elimination System (NPDES) permit (Permit Order No. R2-2022-0018, NPDES Permit No. CAS612008), effective July 1, 2022, which requires post-development controls for 5,000 square feet, not 10,000 square feet as noted in the document.
14. **Page 112, Impact HYD-3**: The document notes the bridge would not impede flood flows and would avoid impacts within the bank or channel. Valley Water has not approved the final design details for the bridge for issuance of an encroachment permit at this time. Valley Water will require as part of the encroachment permit review process that the bridge is designed in accordance with Valley Water's Water Resources Protection Manual's requirements for freeboard and that the City demonstrate that the bridge would not increase flooding.
15. Valley Water records show that two (2) active wells are located on the project site. While Valley Water has records for most wells located in the County, it is always possible that a well exists that is not in Valley Water's records. If previously unknown wells are found on the subject property during development, they must be properly destroyed under permit from Valley Water or registered with Valley Water and protected from damage. For more information, please contact Valley Water's Well Ordinance Program Hotline at (408) 630-2660.

If you have any questions, please contact me at (408) 630-3157 or kthai@valleywater.org. Please reference Valley Water File No. 32980 on any future correspondence.

DocuSign Envelope ID: 4D7FA633-E3C3-4907-9921-9783EA0BF068

Sincerely,

DocuSigned by:
Kevin Thai
B343DDD8C05245D...

Kevin Thai, CFM
Associate Engineer
Community Projects Review Unit

cc: Y. Arroyo, C. Haggerty, B. Hwang, J. Weinik, K. Thai, File

TABLE OF CONTENTS

Section 1.0 Introduction 1
Section 2.0 Responses to Comments 2
Section 3.0 Initial Study Text Revisions 7
Section 4.0 Conclusion 10

Appendix A: Initial Study Comment Letter from Valley Water

SECTION 1.0 INTRODUCTION

The 30-day Initial Study/Mitigated Negative Declaration (IS/MND) public review period for the South Milpitas Boulevard Bridge Project started March 1, 2024, and ended April 1, 2024. The City of Milpitas received one comment letter during the public review period. The comment letter is from Valley Water. The following pages contain responses to comments submitted by Valley Water. A copy of the comment letter is attached to this document.

Pursuant to CEQA Guidelines §15073.5, recirculation of the MND is required when the document must be "substantially revised" after public notice of its availability. A "substantial revision" is defined as:

(1) A new, avoidable significant effect is identified and mitigation measures or project revisions must be added in order to reduce the effect to insignificance; or
(2) The lead agency determines that the proposed mitigation measures or project revisions will not reduce potential effects to less than significance and new measures or revisions must be required.

CEQA does not require formal responses to comments on an IS/MND. The decision-making body shall adopt the proposed MND only if it finds on the basis of the whole record before it, that there is no substantial evidence that the project will have a significant effect on the environment and the MND reflects the lead agency's independent judgment and analysis [CEQA Guidelines §15074(b)].

SECTION 2.0 RESPONSES TO COMMENTS

The City of Milpitas received one comment letter from Valley Water on the IS/MND. A copy of the letter is attached to this document.

The specific comments are included in this memo and are presented as "Comment" with each response directly following ("Response").

COMMENT LETTER A: VALLEY WATER – MARCH 29, 2024

Comment A.1:
Valley Water owns fee title property along Penitencia East Channel where the bridge is proposed to be located. Any work on Valley Water's fee title property will require the issuance of a Valley Water encroachment permit as per Valley Water's Water Resources Protection Ordinance. Issuance of an encroachment permit and sale of a permanent easement for the bridge are discretionary acts and require Valley Water to be considered a responsible agency under CEQA.

> **Response A.1:** This comment provides factual information about the project. Section 2.7.2 of the Initial Study identifies Valley Water as a Responsible Agency under CEQA. The text of the Initial Study has been revised to reflect that the project would require a permanent easement from Valley Water for the bridge (refer to Section 3.0 of this document). The text revision does not change the analysis, adequacy, or the findings of the IS/MND.

Comment A.2:
The appendices referenced in the document were not provided in the link provided on the City's website for the IS/MND. Please provide copies of the appendices referenced in the Biological Resources and Hydrology and Water Quality sections for our review.

> **Response A.2:** The requested appendices were provided to Valley Water on April 3, 2024.

Comment A.3:
Page 7, Section 2.7.2, Responsible Agency: Construction of the South Milpitas Boulevard Bridge will only require a Valley Water encroachment permit and not a Joint Use Agreement.

> **Response A.3:** The text of the Initial Study has been revised to reflect that the project would require an encroachment permit and permanent easement from Valley Water for the bridge (refer to Section 3.0 of this document). The text revision does not change the analysis, adequacy, or the findings of the IS/MND.

Comment A.4:
Page 9, Figure 3.2-1 shows that utilities are proposed to be installed on both the upstream and downstream faces of the bridge. Utilities are to be placed on the downstream face of the bridge only.

> **Response A.4:** Bridge design, including the placement of utilities on the bridge, has been and will continue to be coordinated with Valley Water and will be subject to review and approval by Valley Water as part of the encroachment permit process.

Comment A.5:
Page 11, Section 3.2.3, Right-of-Way and Temporary Construction Easements: This section should identify the permanent easements required to be dedicated to Valley Water for re-alignment of Valley Water's existing maintenance roads along the north and south banks of the creek impacted by the bridge construction.

Response A.5: Section 3.2.3 of the Initial Study has been revised to reflect that the project would dedicate permanent easements to Valley Water for re-alignment of Valley Water's existing maintenance roads along the north and south banks of the creek (refer to Section 3.0 of this document). The text revision does not change the analysis, adequacy, or the findings of the IS/MND.

Comment A.6:
Page 13, Section 3.2.4, Construction: The discussion on page 13 regarding temporary work in the creek notes that work can only occur in the creek between June 15 and October 15 due to Valley Water requirements. Valley Water generally does not allow obstructions in the creek during the rainy season, April 15 and October 15. The CA Department of Fish and Wildlife, Regional Water Quality Control Board and Army Corps of Engineers permits for the project may define their own work windows, which may be more restrictive, in which the creek diversion, temporary falsework, etc. may occur in the creek.

Response A.6: The text in the Initial Study has been revised to state temporary work in the creek could occur between April 15 through October 15 (refer to Section 3.0 of this document). The text revision does not change the analysis, adequacy, or the findings of the IS/MND.

Comment A.7:
Page 55, Impact BIO-2, Paragraph 1: The discussion on page 55 regarding waters of the US and State is not clear or consistent. The text states that Waters of the US and State occur up to the OHW and then states Waters of the State would occur to the top of bank which is not the same as OHW. Please revise the text for accuracy and consistency.

Response A.7: Penitencia East Channel is considered waters of the U.S. up to the ordinary high water mark (OHWM) and waters of the State up to the channel top of bank. The text has been revised for clarity (refer to Section 3.0 of this document). The text revision does not change the analysis, adequacy, or the findings of the IS/MND.

Comment A8:
Page 55, Impact BIO-2, Paragraph 2: The document notes that 0.02 acres of riparian annual grasslands will be permanently impacted by the project; however, this section does not include any mitigation measures for this permanent impact. Measures to mitigate for the permanent impacts need to be discussed and mitigation measures proposed. Please note that mitigation for non-Valley Water projects such as this project is not allowed on Valley Water property.

Response A.8: As described on page 55 of the Initial Study and consistent with the findings of the Biological Resources Report completed for the project, the bridge would permanently shade 0.02 acres of riparian annual grassland. However, non-native dominated annual grassland such as

that present in the project area is typically able to persist with some shading. The proposed bridge would be eight feet above the banks, allowing for some light under the deck, which would enable enough herbaceous growth to stabilize soils and provide similar habitat quality to the existing condition. For these reasons, a permanent loss of riparian habitat would not occur, and no mitigation is needed. The text of the Initial Study has been revised for clarity (refer to Section 3.0 of this document). The text revision does not change the analysis, adequacy, or the findings of the IS/MND.

Comment A9:
Page 57, MM BIO-2.4: Page 57 states that work within the creek would occur between April 15 and October 15; however, page 13 notes work would only occur between June 15 and October 15.

Response A.9: Refer to Response A.6 above.

Comment A10:
Page 58, Impact BIO-3: The document notes there will be a permanent impact of 0.01 acres to intermittent stream/freshwater marsh and that mitigation is provided for as discussed under BIO-2. However, as noted above the mitigation measures identified under BIO-2 do not address the permanent impacts to riparian habitat.

Response A.10: As described on page 58 of the Initial Study and consistent with the findings of the Biological Resources Report completed for the project, the bridge would permanently shade 0.01 acres of intermittent stream/freshwater marsh habitat. The intermittent stream/freshwater marsh habitat present in the project area is naturally dynamic, seasonally altering its species composition, cover, and locations every year. The shading would occur in a gradient under the bridge with the sunniest area closest to the bridge edges and the shadiest area along the centerline of the bridge. The shading is not expected to prevent the habitat from functioning as an intermittent stream/freshwater marsh comparable to existing conditions. For these reasons, no permanent impact is identified, and no mitigation is needed. The text of the Initial Study has been revised for clarity (refer to Section 3.0 of this document). The text revision does not change the analysis, adequacy, or the findings of the IS/MND.

Comment A11:
Page 45, Section 4.4.1.2, Existing Conditions, Riparian Annual Grassland: The ordinary high-water mark (OHWM) should be defined.

Response A.11: The ordinary high-water mark (OHWM) is shown on Figure 4.4-1 of the Initial Study. A text revision has been added to include a definition of the OHWM (refer to Section 3.0 of this document). The text revision does not change the analysis, adequacy, or the findings of the IS/MND.

Comment A12:
Page 56, MM BIO-2.4, Revegetation of Temporary Impact Areas: Plantings installed to restore Valley Water's property must be approved by Valley Water in accordance with the Water Resources Protection Manual, including use of locally native riparian species grown from propagules collected in the Penitencia Creek watershed. The plant species included in the proposed seed mix do not match the riparian grassland or intermittent stream habitats that will be impacted. Additionally, the use of

coyote brush and California buckwheat are woody species not appropriate for use on the inboard slopes of flood control channels.

Response A.12: The City will continue to coordinate with Valley Water on the project. The seed mix will be subject to review and approval by Valley Water as part of the encroachment permit process. The text of the Initial Study has been revised (refer to Section 3.0 of this document). The text revision does not change the analysis, adequacy, or the findings of the IS/MND.

Comment A13:
Page 104, Municipal Regional Permit Provisions C.3: The document should reference the latest San Francisco Bay Regional Water Quality Control Board (RWQCB) National Pollutant Discharge Elimination System (NPDES) permit (Permit Order No. R2-2022-0018, NPDES Permit No. CAS612008), effective July 1, 2022, which requires post-development controls for 5,000 square feet, not 10,000 square feet as noted in the document.

Response A.13: The Initial Study has been revised to reflect the most current San Francisco Bay Regional Water Quality Control Board (RWQCB) National Pollutant Discharge Elimination System (NPDES) permit (Permit Order No. R2-2022-0018, NPDES Permit No. CAS612008), effective July 1, 2022 (refer to Section 3.0 of this document). The text revision does not change the analysis, adequacy, or the findings of the IS/MND.

Comment A14:
Page 112, Impact HYD-3: The document notes the bridge would not impede flood flows and would avoid impacts within the bank or channel. Valley Water has not approved the final design details for the bridge for issuance of an encroachment permit at this time. Valley Water will require as part of the encroachment permit review process that the bridge is designed in accordance with Valley Water's Water Resources Protection Manual's requirements for freeboard and that the City demonstrate that the bridge would not increase flooding.

Response A.14: It is acknowledged that the final design of the bridge has not been approved by Valley Water. As part of the encroachment permit process, the City will coordinate with Valley Water to ensure that the final design is in accordance with Valley Water's Water Resources Protection Manual's requirements for freeboard and that the City demonstrate that the bridge would not increase flooding. This comment does not provide new information that would change the analysis already disclosed in the Initial Study.

Comment A15:
Valley Water records show that two (2) active wells are located on the project site. While Valley Water has records for most wells located in the County, it is always possible that a well exists that is not in Valley Water's records. If previously unknown wells are found on the subject property during development, they must be properly destroyed under permit from Valley Water or registered with Valley Water and protected from damage. For more information, please contact Valley Water's Well Ordinance Program Hotline at (408) 630-2660.

Response A.15: In the event that inactive or abandoned wells are identified during construction of the proposed project, the applicant will work with Valley Water to ensure appropriate

clearances are received and measures are implemented. This comment does not address the adequacy of the IS/MND.

SECTION 3.0 INITIAL STUDY TEXT REVISIONS

This section contains revisions to the text of the South Milpitas Boulevard Bridge Initial Study dated February 2024. Revised or new language is underlined. All deletions are shown with a ~~line through the text~~.

Page 7 Under Section 2.7.1 Responsible Agencies: REVISE as follows:

- United States Army Corps of Engineers
  - Section 404 Permit
- California Department Fish & Wildlife:
  - Section 1600 Permit
- Regional Water Quality Control Board:
  - 401 Certification/Waste Discharge Permit
- Valley Water:
  - Encroachment permit
  - Permanent Easement
  - ~~Joint Use Agreement~~
- South Bay Water Recycling:
  - Recycled Water Use Permit

Page 11 Under Section 3.2.3 Right-of-Way and Temporary Construction Easements: REVISE the paragraph as follows:

The proposed ~~bridge~~ project would require a permanent easement from Valley Water and would dedicate permanent easements to Valley Water for re-alignment of Valley Water's existing maintenance roads along the north and south banks of the creek. The City of Milpitas would provide the right of way for the proposed roadway connection at the parcel located at 1831-1841 Tarob Court, Milpitas, CA 95035 (APN: 086-36-030). The City is currently in negotiations to acquire the right of way from the parcel located at 1905 Tarob Court, Milpitas, CA 95035 (APN 86-036-041).

Page 13 Under Section 3.2.4 Construction: REVISE the first paragraph as follows:

Project construction would take approximately 18 months to complete. Temporary access into the creek channel may be necessary during bridge construction and falsework may need to be placed in the creek bed during construction, potentially requiring dewatering or diversion of the creek if water is present when construction occurs; therefore, as required by Valley Water, bridge construction would take place in a single dry season from ~~June~~ April 15 to October 15, 2026. Demolition of the existing building and construction of the proposed roadway connection is anticipated to occur simultaneously with the bridge construction, estimated between Spring 2026 and Summer 2027. Construction work would occur between 7:00 a.m. and 7:00 p.m., Monday through Sunday, excluding holidays consistent with the City's Municipal Code Section V-213-3(b). No temporary roadway closures are anticipated during project construction. As required under the National

Pollutant Discharge Elimination System (NPDES) Construction General Permit and Regional Water Quality Control Board (RWQCB) Municipal Regional Stormwater Permit (MRP), the proposed project would implement water quality control measures during and after project construction activities to protect Penitencia East Channel and other receiving waters downstream of the project site.

Page 46 Under Riparian Annual Grassland: REVISE the first paragraph as follows:

This habitat type occurs between the top of bank along the edge of the Valley Water access roads and the ordinary high-water mark (OHWM).[1] The channel banks consist entirely of ruderal grass and herb species.

Page 55 Under Impact BIO-2: REVISE the first paragraph as follows:

As discussed above in Section 4.4.1.2 Existing Conditions, Penitencia East Channel is considered both waters of the U.S. and waters of the state up to the OHWM. In addition, jurisdictional riparian buffers for waters of the state in the study area extend up to the top of bank of the channel. CDFW would likely claim jurisdiction over areas at and below the top of bank on either side of Penitencia East Channel regardless of the vegetative composition of these areas. No riparian habitat (e.g., riparian trees) is present above the top of bank in the study area.

Page 55 Under Impact BIO-2: REVISE the second paragraph as follows:

The majority of ground-disturbing activity (i.e., project construction) would occur outside the top of banks of the Penitencia East Channel. Because the abutments would be placed above the top of bank, no permanent loss of riparian jurisdiction would occur. No riprap or other improvements are proposed to the banks that would prevent future vegetation growth. ~~There would, however, be permanent and temporary impacts to the riparian banks as a result of shading from the proposed bridge and a temporary work area around the bridge abutments.~~ The bridge would permanently shade 0.02 acres of riparian annual grassland.[2] ~~Permanently shaded vegetation would weaken, decrease in cover, or even die off leaving bare soil exposed.~~ Nevertheless, non-native dominated annual grassland such as that found in the project area is typically able to persist with some shading. The bridge would be eight feet above the banks, allowing for some light under the deck enabling enough herbaceous growth to stabilize soils and provide similar habitat quality to the existing condition. Therefore, the project would not have a substantial permanent adverse effect ~~permanently impact~~ on riparian grassland habitat~~s~~.

Page 56 Under MM BIO-2.4, REVISE the first paragraph as follows:

Revegetation of Temporary Impact Areas. Temporary impact areas within the bed and banks of the channel shall be restored to preconstruction conditions or better. Restoration shall include

[1] Ordinary high water mark means that line on the shore established by the fluctuations of water and indicated by physical characteristics such as clear, natural line impressed on the bank, shelving, changes in the character of soil, destruction of terrestrial vegetation, the presence of litter and debris, or other appropriate means that consider the characteristics of the surrounding areas (Title 33, Code of Federal Regulations, Part 328.3).
[2] H.T. Harvey & Associates. *Biological Resources Report.* December 2023. Page 40.

restoring the topography of temporary impact areas to preconstruction conditions to the extent feasible, bank stabilization, and re-establishment of appropriate vegetation. A habitat-appropriate, weed-free native seed mix or propagated plants shall be applied or installed. ~~Species such as California buckwheat (Eriogonum fasciculatum), California fuschia (Epilobium canum), coyote brush (Baccharis pilularis), purple needlegrass (Stipa pulchra), and seaside heliotrope (Heliotropium curassavicum) would be appropriate.~~ The species composition shall be developed in coordination with Valley Water. The project proponent shall not plant, seed, or otherwise introduce invasive exotic plant species. Revegetation shall be completed as soon as possible after grading at the project site is completed. Seeding placed between October 15 and April 15 shall be covered with broadcast straw, jute netting, coconut fiber blanket, or similar erosion control blanket. Erosion control products with monofilament or woven plastic strands shall not be used. The revegetation will be considered successful if the vegetative cover in the temporary impact areas reaches 75% of the existing baseline cover, excluding species rated as "high" by Cal-IPC.

Page 58 Under Impact BIO-3: REVISE the second paragraph as follows:

The bridge would permanently shade 0.01 acres of intermittent stream/freshwater marsh.[3] This habitat is naturally dynamic, seasonally altering its species composition, cover, and locations every year. The shading would occur in a gradient under the bridge with the sunniest area closest to the bridge edges and the shadiest area along the centerline of the bridge. These unpredictable factors would result in a shift in species composition, cover, and location. Nevertheless, the altered habitat is expected to function as an intermittent stream/freshwater marsh comparable to the existing conditions. Therefore, the project would not permanently impact intermittent stream/freshwater marsh.

Page 104 Under Municipal Regional Permit Provision C.3: REVISE the first paragraph as follows:

The San Francisco Bay RWQCB re-issued the Municipal Regional Stormwater NPDES Permit (MRP) in ~~2015~~ May 2022 to regulate stormwater discharges from municipalities and local agencies (co-permittees) in Alameda, Contra Costa, San Mateo, and Santa Clara Counties, and the cities of Fairfield, Suisun City, and Vallejo.[4] Under Provision C.3 of the MRP, new and redevelopment projects that create or replace ~~10,000~~ 5,000 square feet or more of impervious surface area are required to implement site design, source control, and Low Impact Development (LID)-based stormwater treatment controls to treat post-construction stormwater runoff. LID-based treatment controls are intended to maintain or restore the site's natural hydrologic functions, maximizing opportunities for infiltration and evapotranspiration, and using stormwater as a resource (e.g. rainwater harvesting for non-potable uses). The MRP also requires that stormwater treatment measures are properly installed, operated, and maintained.

[3] H.T. Harvey & Associates. *Biological Resources Report.* December 2023. Page 43.

[4] ~~MRP Number CAS612008~~ California Regional Water Quality Control Board San Francisco Region. Municipal Regional Stormwater NPDES Permit, Order No. R2-2022-0018, NPDES Permit No. CAS612008. May 11, 2022.

SECTION 4.0 CONCLUSION

The comment received on the IS/MND did not raise any new issues about the project's environmental impacts or provide information indicating the project would result in new environmental impacts or impacts substantially greater in severity than disclosed in the IS/MND. Minor clarifications were added to the text of the IS/MND (refer to Section 3.0 Draft IS/MND Text Revisions). The text revisions do not constitute a "substantial revision" pursuant to CEQA Guidelines §15073.5 and recirculation of the MND is not required.

DocuSign Envelope ID: 4D7FA633-E3C3-4907-9921-9783EA0BF068

APPENDIX A

Valley Water

Clean Water • Healthy Environment • Flood Protection

File: 32980
Penitencia East Channel

March 29, 2024

Lyhak Eam, P.E.
City of Milpitas
455 East Calaveras Boulevard
Milpitas, CA 95035

Subject: Initial Study / Mitigated Negative Declaration for South Milpitas Boulevard Bridge

Dear Lyhak Eam:

The Santa Clara Valley Water District (Valley Water) has reviewed the Initial Study / Mitigated Negative Declaration (IS/MND) for the South Milpitas Boulevard Bridge, received on March 4, 2024.

1. Valley Water owns fee title property along Penitencia East Channel where the bridge is proposed to be located. Any work on Valley Water's fee title property will require the issuance of a Valley Water encroachment permit as per Valley Water's Water Resources Protection Ordinance. Issuance of an encroachment permit and sale of a permanent easement for the bridge are discretionary acts and require Valley Water to be considered a responsible agency under CEQA.
2. The appendices referenced in the document were not provided in the link provided on the City's website for the IS/MND. Please provide copies of the appendices referenced in the Biological Resources and Hydrology and Water Quality sections for our review.
3. **Page 7, Section 2.7.2, Responsible Agency:** Construction of the South Milpitas Boulevard Bridge will only require a Valley Water encroachment permit and not a Joint Use Agreement.
4. **Page 9,** Figure 3.2-1 shows that utilities are proposed to be installed on both the upstream and downstream faces of the bridge. Utilities are to be placed on the downstream face of the bridge only.
5. **Page 11, Section 3.2.3, Right-of-Way and Temporary Construction Easements**: This section should identify the permanent easements required to be dedicated to Valley Water for re-alignment of Valley Water's existing maintenance roads along the north and south banks of the creek impacted by the bridge construction.
6. **Page 13, Section 3.2.4, Construction:** The discussion on page 13 regarding temporary work in the creek notes that work can only occur in the creek between June 15 and October 15 due to Valley Water requirements. Valley Water generally does not allow obstructions in the creek during the rainy season, April 15 and October 15. The CA Department of Fish and Wildlife, Regional Water Quality Control Board and Army Corps of Engineers permits for the project may define their own work windows, which may be more restrictive, in which the creek diversion, temporary falsework, etc. may occur in the creek.

DocuSign Envelope ID: 4D7FA633-E3C3-4907-9921-9783EA0BF068

7. **Page 55, Impact BIO-2, Paragraph 1:** The discussion on page 55 regarding waters of the US and State is not clear or consistent. The text states that Waters of the US and State occur up to the OHW and then states Waters of the State would occur to the top of bank which is not the same as OHW. Please revise the text for accuracy and consistency.
8. **Page 55, Impact BIO-2, Paragraph 2:** The document notes that 0.02 acres of riparian annual grasslands will be permanently impacted by the project; however, this section does not include any mitigation measures for this permanent impact. Measures to mitigate for the permanent impacts need to be discussed and mitigation measures proposed. Please note that mitigation for non-Valley Water projects such as this project is not allowed on Valley Water property.
9. **Page 57, MM BIO-2.4:** Page 57 states that work within the creek would occur between April 15 and October 15; however, page 13 notes work would only occur between June 15 and October 15.
10. **Page 58, Impact BIO-3:** The document notes there will be a permanent impact of 0.01 acres to intermittent stream/freshwater marsh and that mitigation is provided for as discussed under BIO-2. However, as noted above the mitigation measures identified under BIO-2 do not address the permanent impacts to riparian habitat.
11. **Page 45, Section 4.4.1.2, Existing Conditions, Riparian Annual Grassland:** The ordinary high-water mark (OHWM) should be defined.
12. **Page 56, MM BIO-2.4, Revegetation of Temporary Impact Areas:** Plantings installed to restore Valley Water's property must be approved by Valley Water in accordance with the Water Resources Protection Manual, including use of locally native riparian species grown from propagules collected in the Penitencia Creek watershed. The plant species included in the proposed seed mix do not match the riparian grassland or intermittent stream habitats that will be impacted. Additionally, the use of coyote brush and California buckwheat are woody species not appropriate for use on the inboard slopes of flood control channels.
13. **Page 104, Municipal Regional Permit Provisions C.3:** The document should reference the latest San Francisco Bay Regional Water Quality Control Board (RWQCB) National Pollutant Discharge Elimination System (NPDES) permit (Permit Order No. R2-2022-0018, NPDES Permit No. CAS612008), effective July 1, 2022, which requires post-development controls for 5,000 square feet, not 10,000 square feet as noted in the document.
14. **Page 112, Impact HYD-3**: The document notes the bridge would not impede flood flows and would avoid impacts within the bank or channel. Valley Water has not approved the final design details for the bridge for issuance of an encroachment permit at this time. Valley Water will require as part of the encroachment permit review process that the bridge is designed in accordance with Valley Water's Water Resources Protection Manual's requirements for freeboard and that the City demonstrate that the bridge would not increase flooding.
15. Valley Water records show that two (2) active wells are located on the project site. While Valley Water has records for most wells located in the County, it is always possible that a well exists that is not in Valley Water's records. If previously unknown wells are found on the subject property during development, they must be properly destroyed under permit from Valley Water or registered with Valley Water and protected from damage. For more information, please contact Valley Water's Well Ordinance Program Hotline at (408) 630-2660.

If you have any questions, please contact me at (408) 630-3157 or kthai@valleywater.org. Please reference Valley Water File No. 32980 on any future correspondence.

DocuSign Envelope ID: 4D7FA633-E3C3-4907-9921-9783EA0BF068

Sincerely,

DocuSigned by:
Kevin Thai
B343DDD8C05245D...

Kevin Thai, CFM
Associate Engineer
Community Projects Review Unit

cc: Y. Arroyo, C. Haggerty, B. Hwang, J. Weinik, K. Thai, File

NOTICE OF EXEMPTION MEMORANDUM

July 29, 2021

From: Demetri Loukas
Principal Project Manager
David J. Powers & Associates, Inc.
1871 The Alameda, Suite 200
San Jose, CA 95126

To: Julie Waldron
Associate Engineer
City of Milpitas
455 E. Calaveras Boulevard
Milpitas, CA 95035

Re: Qualifications of the Montague Expressway Pedestrian Overcrossing for a Statutory Exemption under Public Resources Code Section 21080.25

Background

The Project Site is within the Transit Area Specific Plan (TASP) area. The primary objective of the TASP was the redevelopment of the industrial land around the existing Valley Transportation Agency (VTA) light rail stations and the future BART station (now constructed) with transit-oriented residential and commercial developments. One of the specific objectives of the TASP was to ensure the pedestrian-oriented character of the Planning Area by creating streetscapes that are richly detailed, fine-grained, and provide good connectivity between desired destinations. The construction of pedestrian overcrossings extending over Montague Expressway (Project) was explicitly identified in the TASP.

A Programmatic Environmental Impact Report (PEIR) was prepared for the TASP that evaluated the potential environmental impacts of the Specific Plan at a program level. The Final PEIR was adopted in May 2008, and amended in 2011. The TASP PEIR assumed that project-level, site-specific environmental issues for a given parcel proposed for redevelopment would require additional review. This Notice of Exemption (NOE) Memorandum provides that subsequent project-level environmental review for the Project.

Project Description

The Project proposes to construct a 198-foot-long pedestrian overcrossing across Montague Expressway. The overcrossing would be located approximately 200 feet south of Delano Street and immediately north of Penitencia East Channel. An aerial photograph of the project location and surrounding area is shown on Figure 1. The pedestrian overcrossing would be supported by two towers, one located on each side of Montague Expressway, which would have stairs and elevators that provide pedestrian access to the overcrossing. The pedestrian overcrossing would connect the existing sidewalks along the east and west sides of Montague Expressway. A top-down view and cross-section of the proposed pedestrian overcrossing is shown on Figure 2.

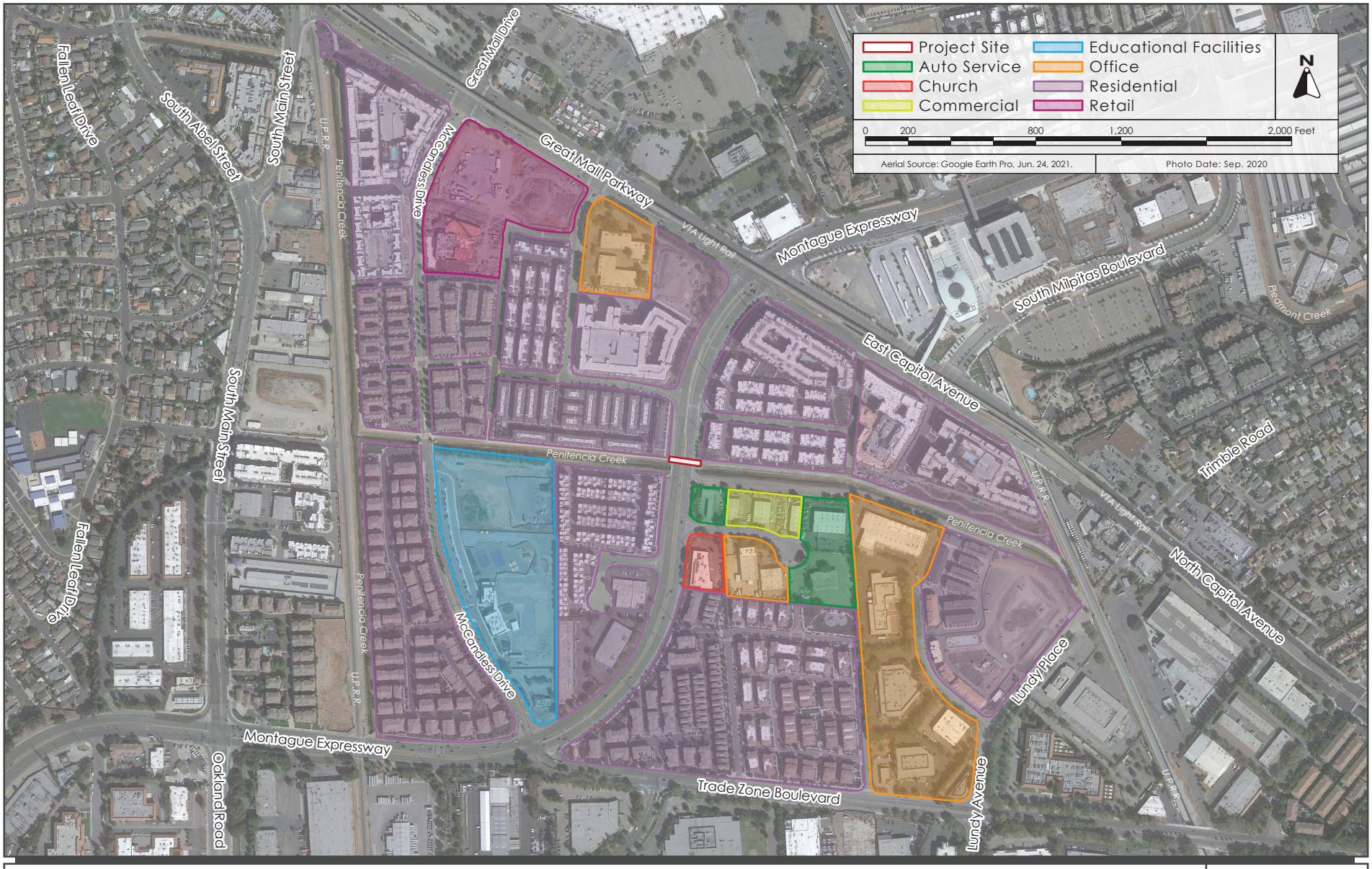

AERIAL PHOTOGRAPH AND SURROUNDING LAND USES | FIGURE 1

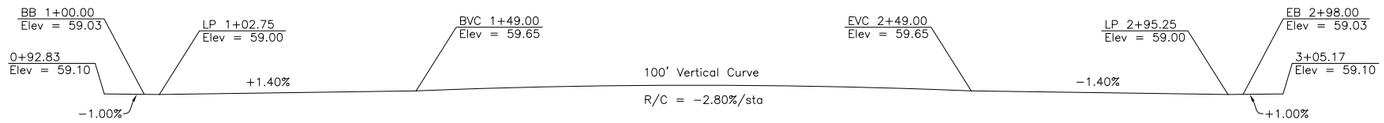

PROFILE GRADE

Note:
Verify Profile Grade w/ Civil

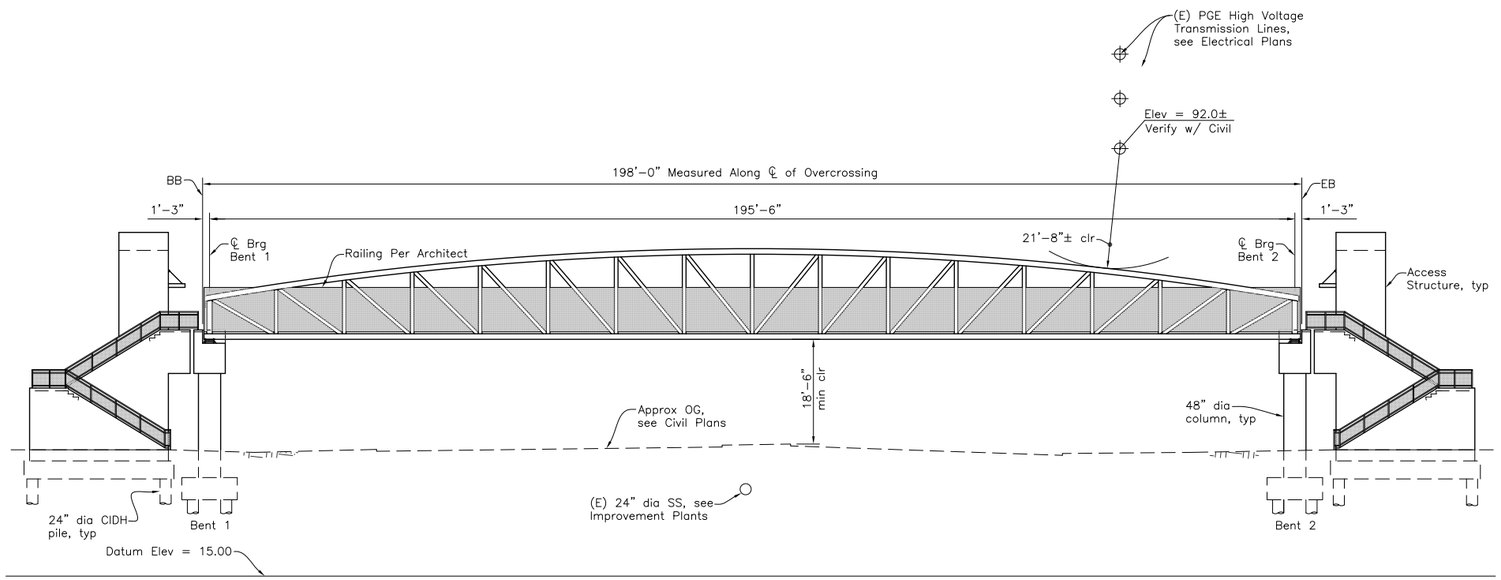

ELEVATION

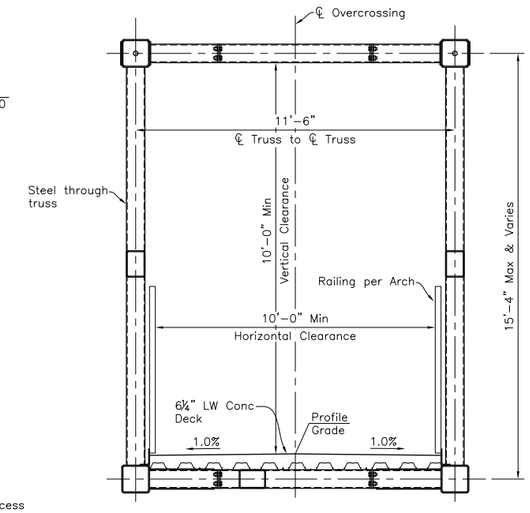

TYPICAL SECTION

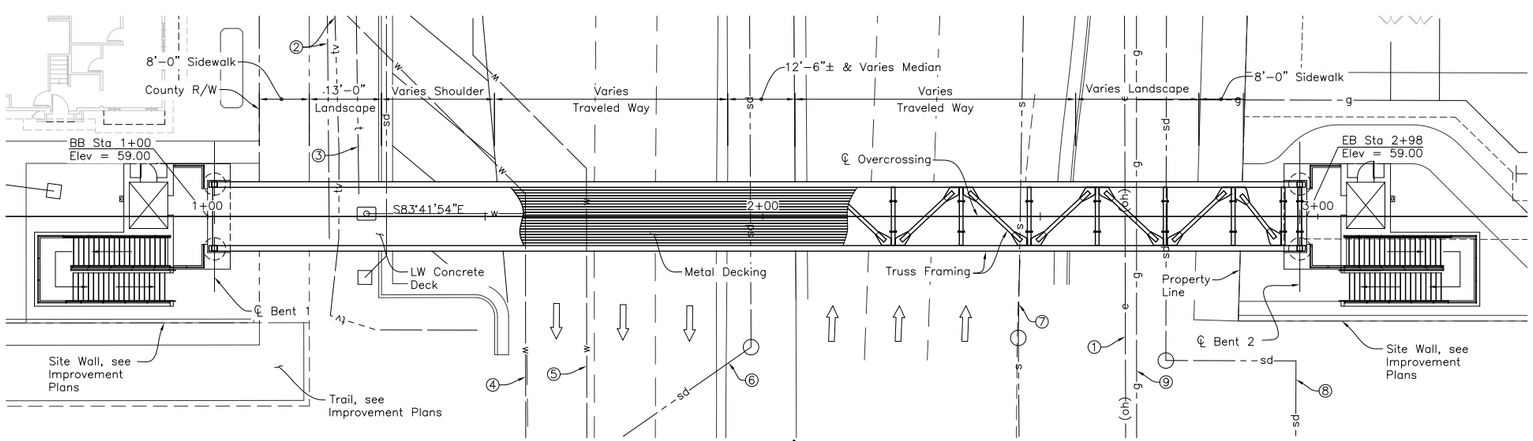

PLAN

Legend:

- ⇨ Indicates Direction of Traffic
- ① Indicates Existing Overhead Electrical, see Electrical Plans
- ② Indicates Existing Television Line, see Civil Plans
- ③ Indicates Existing Telephone Line, see Civil Plans
- ④ Indicates Existing 12" Water Line, see Civil Plans
- ⑤ Indicates Existing 6" Reclaimed Water Line, see Civil Plans
- ⑥ Indicates Existing 24" Storm Drain Line, see Civil Plans
- ⑦ Indicates Existing 12" Sanitary Sewage Line, see Civil Plans
- ⑧ Indicates Existing 18" Storm Drain Line, see Civil Plans
- ⑨ Indicates Existing Gas Line, see Civil Plans

Source: Cornerstone, September 19, 2017.

TOP DOWN VIEW AND CROSS SECTION OF THE PEDESTRIAN OVERCROSSING | FIGURE 2

Environmental Review

The City of Milpitas is responsible for construction and operation of the Project and is thus serving as Lead Agency under the California Environmental Quality Act (CEQA).

The Project, as described above, is a "Pedestrian and bicycle facilities, including new facilities" as defined under Public Resources Code 21080.25(b)(1) .

Pursuant to Public Resources Code section 21080.25(c), in order to be found statutorily exempt, the Project must meet the following requirements:

- A public agency is carrying out the project and is the Lead Agency for the project.
    - The City is carrying out the Project and is the Lead Agency for the Project.
- The project is located in an urbanized area.
    - The Project is located in an urbanized area as shown on Figure 1.
- The project is located on or within an existing public right-of-way.
    - The Project is located within an existing public right-of-way as shown on Appendix A and Appendix B.
- The project shall not add physical infrastructure that increases new automobile capacity on existing rights-of-way except for minor modifications needed for the efficient and safe movement of transit vehicles, such as extended merging lanes. The project shall not include the addition of any auxiliary lanes.
    - The Project would be limited to the construction of a pedestrian overcrossing extending over Montague Expressway and does not propose any changes to that could affect automobile capacity and does not include the addition of any auxiliary lanes.
- The construction of the project shall not require the demolition of affordable housing units.
    - The Project does not require the demolition of affordable housing units.
- Projects with a cost of $100,000,000 or greater are subject to additional requirements.
    - The cost of the Project would not exceed $100,000,000.

In addition to the requirements of subsection (c), pursuant to Public Resources Code 21080.25(d), the lead agency must also certify that the project will be completed by a skilled and trained workforce in accordance with Chapter 2.9 (commencing with Section 2600) of Part 1 of Division 2 of the Public Contract Code. Here, the Project would be completed by a skilled and trained workforce in accordance with Chapter 2.9 (commencing with Section 2600) of Part 1 of Division 2 of the Public Contract Code.

Conclusion

As documented above, the Project meets all of the requirements for a Statutory Exemption under Public Resources Code section 21080.25; therefore, the Project is statutorily exempt from environmental review under CEQA.

APPENDIX A

Tract 10324 450 Montague

CONFORMED COPY: This document has not been compared with the original.
SANTA CLARA COUNTY CLERK-RECORDER

Doc#: 23477907
10/26/2016 1:23 PM

TRACT 10324
450 MONTAGUE

CONSISTING OF 9 SHEETS
FOR CONDOMINIUM PURPOSES
BEING A SUBDIVISION OF PARCELS ONE AND TWO OF LOT LINE ADJUSTMENT 2015-004, RECORDED BY GRANT DEED, OCTOBER 8, 2015 IN DOCUMENT NO. 23102251, AND PARCEL ONE PER THAT CERTAIN GRANT DEED RECORDED APRIL 2, 2015 IN DOCUMENT NO. 22904355 OF OFFICIAL RECORDS SANTA CLARA COUNTY
LYING ENTIRELY WITHIN THE CITY OF MILPITAS, SANTA CLARA COUNTY

Carlson, Barbee & Gibson, Inc.
CIVIL ENGINEERS • SURVEYORS • PLANNERS
SAN RAMON, CALIFORNIA

MAY 2016

OWNER'S STATEMENT

WE HEREBY STATE THAT WE ARE THE OWNERS OF OR HAVE SOME RIGHT, TITLE, OR INTEREST IN AND TO THE REAL PROPERTY INCLUDED WITHIN THE SUBDIVISION SHOWN HEREON; THAT WE ARE THE ONLY PERSONS WHOSE CONSENT IS NECESSARY TO PASS A CLEAR TITLE TO SAID REAL PROPERTY; THAT WE CONSENT TO THE MAKING AND RECORDING OF THIS SUBDIVISION MAP AS SHOWN WITHIN THE DISTINCTIVE BOUNDARY LINE.

WE HEREBY OFFER FOR DEDICATION TO THE CITY OF MILPITAS IN EASEMENT AS DELINEATED HEREON AND DESIGNATED AS "STREET DEDICATION IN EASEMENT" FOR PUBLIC USE FOR ROADWAY PURPOSES, OPERATION, ALTERATION, RELOCATION, MAINTENANCE, REPAIR AND REPLACEMENT OF ALL PUBLIC SERVICE FACILITIES AND THEIR APPURTENANCES OVER, UNDER, ALONG AND ACROSS THE FOLLOWING:

1. PARCEL T

THE REAL PROPERTY BELOW IS DEDICATED AS AN EASEMENT FOR PUBLIC PURPOSES:

WE HEREBY OFFER FOR DEDICATION TO CITY OF MILPITAS FOR PUBLIC USE FOR OPERATION, ALTERATION, RELOCATION, MAINTENANCE, REPAIR AND REPLACEMENT OF ALL PUBLIC SERVICE FACILITIES AND THEIR APPURTENANCES, OVER, UNDER, ALONG AND ACROSS THE FOLLOWING:

1. EASEMENT FOR EMERGENCY VEHICLE ACCESS PURPOSES (EAE).
2. EASEMENT FOR PUBLIC SERVICE AND UTILITY EASEMENT PURPOSES (PSUE).
3. EASEMENT FOR PUBLIC ACCESS PURPOSES EASEMENT (PAE).
4. EASEMENT FOR FUTURE BRIDGE IMPROVEMENTS AND PUBLIC ACCESS PURPOSES (BAE).

THE ABOVE MENTIONED EASEMENTS (EAE, PSUE AND PAE) SHALL REMAIN OPEN AND FREE FROM BUILDINGS AND STRUCTURES OF ANY KIND EXCEPT PUBLIC SERVICE AND PUBLIC UTILITY STRUCTURES AND THEIR APPURTENANCES (SUCH AS POLES, CONDUITS, WIRES, GAS LINES, TRANSFORMERS, ETC) AND LAWFUL FENCES. UNOBSTRUCTED CONTINUOUS ACCESS SHALL BE MAINTAINED AT ALL TIMES.

WE ALSO HEREBY RETAIN FOR THE PRIVATE USE OF THE LOT OWNERS WITHIN THIS SUBDIVISION, THEIR LICENSEES, VISITORS AND TENANTS WITH MAINTENANCE BY THE HOMEOWNERS ASSOCIATION ALL IN ACCORDANCE WITH THE DECLARATIONS OF COVENANTS CONDITIONS AND RESTRICTIONS CREATED FOR TRACT 10324 THE FOLLOWING:

1. PARCEL A, PARCEL B, PARCEL C AND PARCEL P FOR COMMON AREA
2. PARCEL D, PARCEL E, PARCEL F, PARCEL G, PARCEL H, PARCEL I, PARCEL J, PARCEL K, PARCEL L, PARCEL M, PARCEL N, PARCEL O AND PARCEL R FOR PRIVATE STREET AND PRIVATE UTILITY PURPOSES; SAID STREETS AND PARCELS WILL BE OWNED AND MAINTAINED BY THE HOMEOWNERS ASSOCIATION ALL IN ACCORDANCE WITH THE DECLARATION OF COVENANTS CONDITIONS AND RESTRICTIONS CREATED FOR THIS TRACT
3. PARCEL Q AND PARCEL S ARE INTENDED FOR FUTURE CONVEYANCE TO THE COUNTY OF SANTA CLARA FOR RIGHT OF WAY PURPOSES, AND UNTIL SUCH TIME SAID CONVEYANCES OCCUR, SAID PARCELS SHALL BE RETAINED, OWNED AND MAINTAINED BY THE HOMEOWNERS ASSOCIATION.

THE DESIGNATED PRIVATE STREETS (DELANO STREET, RIESLING AVENUE, VINEYARD AVENUE) ON THIS MAP ARE NOT PART OF THE CITY OF MILPITAS STREET SYSTEM AND ARE NOT ACCEPTED FOR PUBLIC MAINTENANCE.

OWNER: LMC MILPITAS HOLDINGS I, LLC, A DELAWARE LIMITED LIABILITY COMPANY;
BY: LMV MILPITAS REIT, LLC, A DELAWARE LIMITED LIABILITY COMPANY, ITS SOLE MEMBER;
BY: LENNAR MULTIFAMILY BTC VENTURE GP SUBSIDIARY, LLC, A DELAWARE LIMITED LIABILITY COMPANY, ITS MANAGER;
BY: LENNAR MULTIFAMILY BTC VENTURE GP, LLC, A DELAWARE LIMITED LIABILITY COMPANY, ITS SOLE MEMBER;

BY: [signature]
NAME: Alex Waterbury
TITLE: Vice President

OWNER: LENNAR HOMES OF CALIFORNIA, INC., A CALIFORNIA CORPORATION

BY: [signature]
NAME: Brian Olin
TITLE: Vice President

OWNER'S ACKNOWLEDGMENT

A NOTARY PUBLIC OR OTHER OFFICER COMPLETING THIS CERTIFICATE VERIFIES ONLY THE IDENTITY OF THE INDIVIDUAL WHO SIGNED THE DOCUMENT TO WHICH THIS CERTIFICATE IS ATTACHED, AND NOT THE TRUTHFULNESS, ACCURACY, OR VALIDITY OF THAT DOCUMENT.

STATE OF California } SS.
COUNTY OF Contra Costa }

ON May 4, 2016, BEFORE ME, Lindsey D. Jacobson, A NOTARY PUBLIC, PERSONALLY APPEARED Brian Olin, WHO PROVED TO ME ON THE BASIS OF SATISFACTORY EVIDENCE TO BE THE PERSON(~~S~~) WHOSE NAME(~~S~~) IS/~~ARE~~ SUBSCRIBED TO THE WITHIN INSTRUMENT AND ACKNOWLEDGED TO ME THAT HE/~~SHE/THEY~~ EXECUTED THE SAME IN HIS/~~HER/THEIR~~ AUTHORIZED CAPACITY(~~IES~~), AND THAT BY HIS/~~HER/THEIR~~ SIGNATURE(~~S~~) ON THE INSTRUMENT THE PERSON(~~S~~), OR THE ENTITY UPON BEHALF OF WHICH THE PERSON(~~S~~) ACTED, EXECUTED THE INSTRUMENT.

I CERTIFY UNDER PENALTY OF PERJURY UNDER THE LAWS OF THE STATE OF CALIFORNIA THAT THE FOREGOING PARAGRAPH IS TRUE AND CORRECT.

WITNESS MY HAND:
SIGNATURE: Lindsey D. Jacobson
NAME (PRINT): Lindsey D. Jacobson
PRINCIPAL COUNTY OF BUSINESS: Contra Costa
MY COMMISSION NUMBER: 1987297
MY COMMISSION EXPIRES: September 1, 2016

OWNER'S ACKNOWLEDGMENT

A NOTARY PUBLIC OR OTHER OFFICER COMPLETING THIS CERTIFICATE VERIFIES ONLY THE IDENTITY OF THE INDIVIDUAL WHO SIGNED THE DOCUMENT TO WHICH THIS CERTIFICATE IS ATTACHED, AND NOT THE TRUTHFULNESS, ACCURACY, OR VALIDITY OF THAT DOCUMENT.

STATE OF CALIFORNIA } SS.
COUNTY OF Alameda }

ON 5/11/2016, BEFORE ME, Grace W. Koroma, A NOTARY PUBLIC, PERSONALLY APPEARED Alex Waterbury, WHO PROVED TO ME ON THE BASIS OF SATISFACTORY EVIDENCE TO BE THE PERSON(S) WHOSE NAME(S) IS/ARE SUBSCRIBED TO THE WITHIN INSTRUMENT AND ACKNOWLEDGED TO ME THAT HE/SHE/THEY EXECUTED THE SAME IN HIS/HER/THEIR AUTHORIZED CAPACITY(IES), AND THAT BY HIS/HER/THEIR SIGNATURE(S) ON THE INSTRUMENT THE PERSON(S), OR THE ENTITY UPON BEHALF OF WHICH THE PERSON(S) ACTED, EXECUTED THE INSTRUMENT.

I CERTIFY UNDER PENALTY OF PERJURY UNDER THE LAWS OF THE STATE OF CALIFORNIA THAT THE FOREGOING PARAGRAPH IS TRUE AND CORRECT.

WITNESS MY HAND:
SIGNATURE: [signature]
NAME (PRINT): Grace W. Koroma
PRINCIPAL COUNTY OF BUSINESS: CONTRA COSTA
MY COMMISSION NUMBER: 2130324
MY COMMISSION EXPIRES: October 15, 2019

RECORDER'S STATEMENT

FILED THIS 26 DAY OF October, 2016, AT 16 M. IN BOOK OF MAPS 898.
AT PAGES 8-16, SERIES NUMBERS 23477907, AT THE REQUEST OF FIRST AMERICAN TITLE COMPANY.

FEE 24.00

REGINA ALCOMENDRAS
SANTA CLARA COUNTY RECORDER
BY [signature]
DEPUTY
Oscar Ortiquilla

898/8/16

SHEET 1 OF 9

2001-020

23477907

1-257

8

CONFORMED COPY: This document has not been compared with the original.
SANTA CLARA COUNTY CLERK-RECORDER

TRACT 10324
450 MONTAGUE

CONSISTING OF 9 SHEETS
FOR CONDOMINIUM PURPOSES
BEING A SUBDIVISION OF PARCELS ONE AND TWO OF LOT LINE ADJUSTMENT 2015-004, RECORDED BY GRANT DEED, OCTOBER 8, 2015 IN DOCUMENT NO. 23102251, AND PARCEL ONE PER THAT CERTAIN GRANT DEED RECORDED APRIL 2, 2015 IN DOCUMENT NO. 22904355 OF OFFICIAL RECORDS SANTA CLARA COUNTY
LYING ENTIRELY WITHIN THE CITY OF MILPITAS, SANTA CLARA COUNTY

Carlson, Barbee & Gibson, Inc.
CIVIL ENGINEERS • SURVEYORS • PLANNERS
SAN RAMON, CALIFORNIA

MAY 2016

CITY ENGINEER'S STATEMENT

I HEREBY STATE THAT I HAVE EXAMINED THE HEREIN MAP; THAT THE SUBDIVISION AS SHOWN THEREIN IS SUBSTANTIALLY THE SAME AS IT APPEARED ON THE TENTATIVE MAP AND ANY APPROVED ALTERATIONS THEREOF; THAT THIS SUBDIVISION COMPLIES WITH PROVISIONS OF THE SUBDIVISION MAP ACT AND LOCAL ORDINANCES, APPLICABLE AT THE TIME OF APPROVAL OF THE TENTATIVE MAP.

SIGNED _____ DATE 7/25/2016
STEVEN MACHIDA, P.E.
CITY ENGINEER, CITY OF MILPITAS
R.C.E. NO. 38441, EXPIRATION DATE MARCH 31, 2017

REGISTERED PROFESSIONAL ENGINEER STEVEN J. MACHIDA No. 38441 Exp. 3/31/17 CIVIL STATE OF CALIFORNIA

CITY SURVEYOR'S STATEMENT

I HEREBY STATE THAT I HAVE EXAMINED THE HEREIN MAP AND THAT I AM SATISFIED THAT SAID MAP IS TECHNICALLY CORRECT.

SIGNED _____ DATE 7/25/2016
LORI MAY WEIS, P.L.S.
ACTING CITY SURVEYOR, CITY OF MILPITAS
MOTT MACDONALD
P.L.S. NO 8803, EXPIRATION DATE DECEMBER 31, 2016

PROFESSIONAL LAND SURVEYOR LORI MAY WEIS No. 8803 STATE OF CALIFORNIA

CITY CLERK'S STATEMENT

I, MARY LAVELLE, CITY CLERK OF THE CITY OF MILPITAS, CALIFORNIA, HEREBY CERTIFY THAT SAID CITY COUNCIL, AS GOVERNING BODY OF SAID CITY AT A REGULAR MEETING HELD ON 6/21, 2016, HAS TAKEN THE FOLLOWING ACTIONS:

1. APPROVED THIS TRACT MAP NO. 10324
2. ACCEPTED, SUBJECT TO IMPROVEMENT, ON BEHALF OF THE PUBLIC THOSE PARCELS OF LAND OFFERED FOR DEDICATION FOR PUBLIC USE IN CONFORMITY WITH THE TERMS OF OFFER OF DEDICATION TO WIT:

A. EASEMENT FOR EMERGENCY VEHICLE ACCESS PURPOSES (EAE).
B. EASEMENT FOR PUBLIC SERVICE AND UTILITY EASEMENT PURPOSES (PSUE).
C. EASEMENT FOR PUBLIC ACCESS EASEMENT PURPOSES (PAE).
D. CAPITOL AVENUE IN EASEMENT FOR ROADWAY PURPOSES, OPERATION, ALTERATION, RELOCATION, MAINTENANCE, REPAIR AND REPLACEMENT OF ALL PUBLIC SERVICE FACILITIES AND THEIR APPURTENANCES.
E. EASEMENT FOR FUTURE BRIDGE IMPROVEMENTS AND PUBLIC ACCESS PURPOSES (BAE).

3. FOR ASSESSMENT DISTRICTS CREATED BY THIS GOVERNING BODY, THE COUNCIL HAS DETERMINED THAT PROVISIONS HAVE BEEN MADE FOR SEGREGATION OF THE RESPONSIBILITY OF EACH OF THE PROPOSED NEW PARCELS FOR A PORTION OF ASSESSMENT PAYMENT OBLIGATION IN THE MANNER PROVIDED IN THE STATUTE PURSUANT TO WHICH THE ASSESSMENTS WERE LEVIED: COMMUNITY FACILITIES DISTRICT 2008-1.

DATED: 8/01/2016 _____
MARY LAVELLE
CITY CLERK, CITY OF MILPITAS

GEOTECHNICAL NOTE

GEOTECHNICAL REPORTS ON THIS PROPERTY HAVE BEEN PREPARED BY ENGEO DATED JUNE 17, 2015, PROJECT NO. 12074.000.000, SIGNED BY ANDREW H. FIRMIN, GE AND PAUL C. GUERIN, GE. AND ROCKRIDGE GEOTECHNICIAL DATED AUGUST 25, 2015, PROJECT NO. 14-632, SIGNED BY CRAIG SHIELDS, GE. AND TESSA WILLIAMS, PE., SAID REPORTS HAVE BEEN FILED WITH THE CITY OF MILPITAS.

SURVEYOR'S STATEMENT

THIS MAP WAS PREPARED BY ME OR UNDER MY DIRECTION AND IS BASED UPON A FIELD SURVEY IN CONFORMANCE WITH THE REQUIREMENTS OF THE SUBDIVISION MAP ACT AT THE REQUEST OF LMC MILPITAS HOLDINGS I, LLC, A DELAWARE LIMITED LIABILITY COMPANY AND LENNAR HOMES OF CALIFORNIA INC., A CALIFORNIA CORPORATION, IN MARCH 2015. I HEREBY STATE THAT THIS FINAL MAP COMPLIES WITH FINAL MAP PROCEDURES OF THE CITY OF MILPITAS, AND THAT THIS FINAL MAP CONFORMS TO THE APPROVED TENTATIVE MAP AND CONDITIONS OF APPROVAL THEREOF WHICH WERE REQUIRED TO BE FULFILLED PRIOR TO THE FILING OF THE FINAL MAP, AND IT IS TECHNICALLY CORRECT.

5/3/16
DATE

LICENSED LAND SURVEYOR MARK H. WEHBER 7960 STATE OF CALIFORNIA

_____
MARK H. WEHBER, P.L.S.
L.S. NO. 7960

DOCUMENTS OF RECORD

1) LIES WITHIN BOUNDS OF MILPITAS REDEVELOPMENT PROJECT AREA PER C534 O.R. 1, AND DOCUMENT NO. 20708005

898/9/16

2001-020

23477907

1-257

9

CONFORMED COPY: This document has not been compared with the original.
SANTA CLARA COUNTY CLERK-RECORDER

TRACT 10324
450 MONTAGUE

CONSISTING OF 9 SHEETS
FOR CONDOMINIUM PURPOSES
BEING A SUBDIVISION OF PARCELS ONE AND TWO OF LOT LINE ADJUSTMENT 2015-004, RECORDED BY GRANT DEED, OCTOBER 8, 2015 IN DOCUMENT NO. 23102251, AND PARCEL ONE PER THAT CERTAIN GRANT DEED RECORDED APRIL 2, 2015 IN DOCUMENT NO. 22904355 OF OFFICIAL RECORDS SANTA CLARA COUNTY
LYING ENTIRELY WITHIN THE CITY OF MILPITAS, SANTA CLARA COUNTY

Carlson, Barbee & Gibson, Inc.
CIVIL ENGINEERS • SURVEYORS • PLANNERS
SAN RAMON, CALIFORNIA

SCALE: 1" = 100' MAY 2016

100' 0' 50' 100' 200' 400'
GRAPHIC SCALE

LINE TABLE			
NO	BEARING	LENGTH	
L1	N06°17'10"E	43.00'	
L2	N06°16'55"E	109.99'	
L3	N83°42'50"W	10.39'	
L4	N06°17'10"E	40.00'	
L5	N70°36'57"W	10.00'	(R)
L6	N83°42'50"W	13.69'	
L7	N56°18'21"W	65.61'	(N56°18'02"E)(13)
L8	N58°09'12"W	33.54'	
L9	N19°00'35"W	141.51'	

CURVE TABLE			
NO	RADIUS	DELTA	LENGTH
C1	40.00'	87°24'53"	61.03'
C2	923.00'	2°35'22"	41.71'
C3	40.00'	103°05'53"	71.98'
C4	100.00'	3°16'19"	5.71'
C5	255.00'	5°25'41"	24.16'
C6	70.00'	10°34'22"	12.92'
C7	606.00'	1°50'51"	19.54'
C8	1796.00'	23°04'26"	723.28'
C9	716.00'	18°58'49"	237.19'
C10	500.00'	25°36'00"	223.40'

BASIS OF BEARINGS:

THE BASIS OF BEARING FOR THIS MAP IS DETERMINED BY FOUND MONUMENTS IN MONTAGUE EXPRESSWAY SHOWN HEREON, THE BEARING BEING S6°16'55"W PER PARCEL MAP (417 M 3). BEARINGS SHOWN HEREON ARE BASED ON THE CALIFORNIA STATE COORDINATE SYSTEM, ZONE 3 (NAD27). MULTIPLY DISTANCES SHOWN BY 0.99994500 TO OBTAIN GRID DISTANCES.

REFERENCES:

(#) INDICATES REFERENCE NUMBER
(1) PARCEL MAP (420 M 22)
(2) PARCEL MAP (417 M 3)
(3) RECORD OF SURVEY (306 M 39)
(4) PARCEL MAP (338 M 42)
(5) PARCEL MAP (422 M 9)
(6) PARCEL MAP (528 M 47)
(7) LOT LINE ADJUSTMENT 2015-004 DOC. NO. 23102251
(8) RECORD OF SURVEY (82 M 17)
(9) DOC. NO. BOOK 8680, PAGE 527
(10) RECORD OF SURVEY (253 M 7)
(11) RECORD OF SURVEY (350 M 21)
(12) RECORD OF SURVEY (299 M 19)
(13) RECORD OF SURVEY (754 M 24)
(14) CITY OF MILPITAS, ENGINEERING DIVISION, BENCHMARK SYSTEM, FEBRUARY 21, 2002
(15) DOC. NO. BOOK 8824, PAGE 144
(16) PARCEL MAP (517 M 42)
(17) BOOK 8243 O.R. PAGE 686

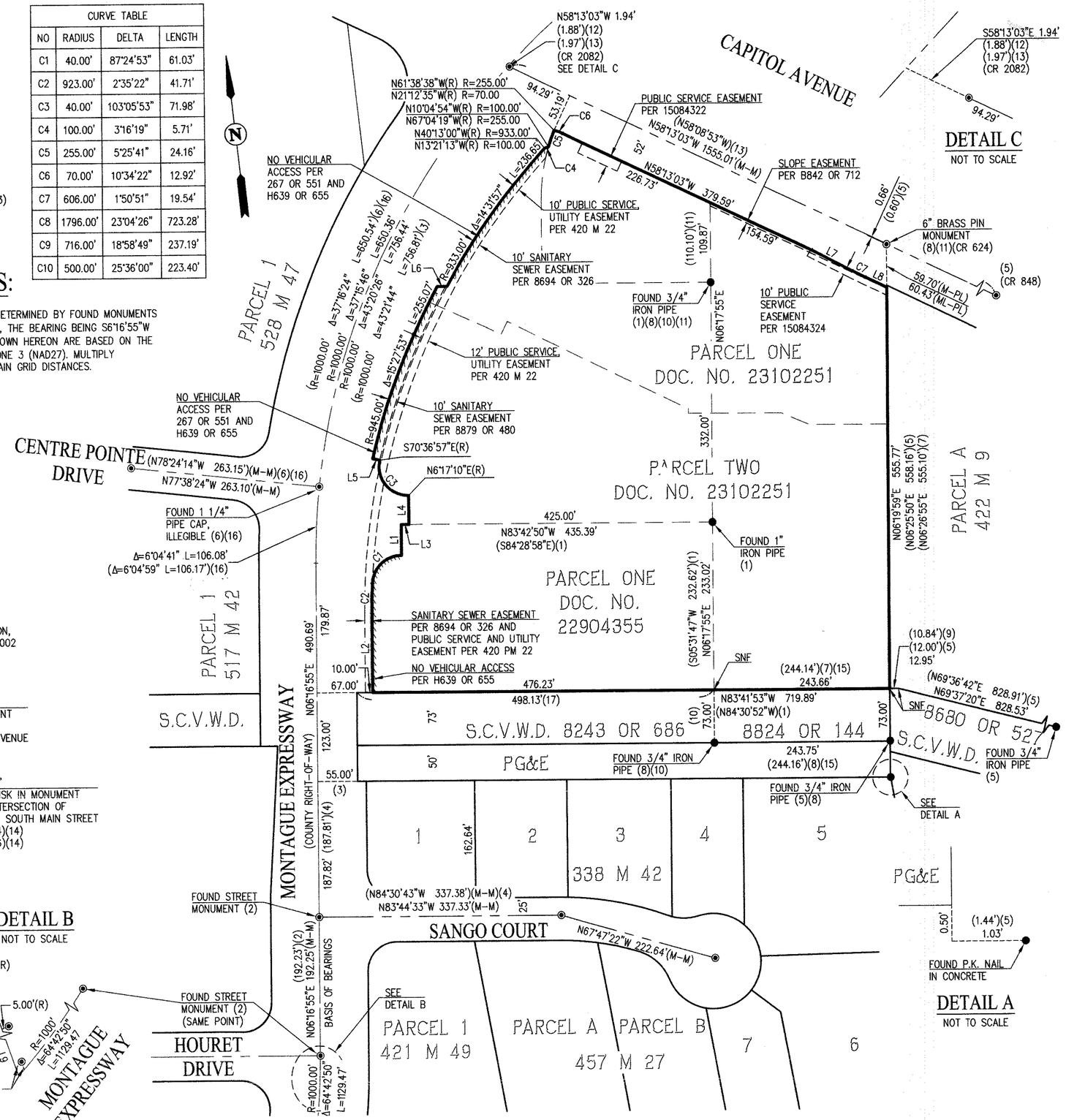

LEGEND

	DISTINCTIVE BOUNDARY LINE
	RIGHT OF WAY LINE
	LOT LINE
	EASEMENT LINE
	MONUMENT LINE
	TIE LINE (AT RIGHT ANGLES)
(R)	RADIAL
(T)	TOTAL
(LL)	LOT LINE
(ML-PL)	MONUMENT LINE TO PROPERTY LINE
(M-M)	MONUMENT TO MONUMENT
(M-PL)	MONUMENT TO PROPERTY LINE
(ML-ML)	MONUMENT LINE TO MONUMENT LINE
◉	FOUND STANDARD STREET MONUMENT, UNLESS OTHERWISE NOTED
◎	SET STANDARD STREET MONUMENT, LS 7960
●	FOUND MONUMENT AS NOTED
BAE	BRIDGE AND ACCESS EASEMENT
EAE	EMERGENCY VEHICLE ACCESS EASEMENT
PAE	PUBLIC ACCESS EASEMENT
PSUE	PUBLIC SERVICE AND UTILITY EASEMENT
AC	ACRE
SF	SQUARE FEET
SNF	SEARCHED FOR NOT FOUND
(#)	RECORD DATA
CR	CORNER RECORD
	NO VEHICULAR ACCESS
	EXISTING LOT LINES REMOVED

2001-020

SHEET 3 OF 9

898/10/16

1-257

CONFORMED COPY: This document has not been compared with the original.
SANTA CLARA COUNTY CLERK-RECORDER

TRACT 10324
450 MONTAGUE

CONSISTING OF 9 SHEETS
FOR CONDOMINIUM PURPOSES
BEING A SUBDIVISION OF PARCELS ONE AND TWO OF LOT LINE ADJUSTMENT 2015-004, RECORDED BY GRANT DEED, OCTOBER 8, 2015 IN DOCUMENT NO. 23102251, AND PARCEL ONE PER THAT CERTAIN GRANT DEED RECORDED APRIL 2, 2015 IN DOCUMENT NO. 22904355 OF OFFICIAL RECORDS SANTA CLARA COUNTY
LYING ENTIRELY WITHIN THE CITY OF MILPITAS, SANTA CLARA COUNTY

Carlson, Barbee & Gibson, Inc.
CIVIL ENGINEERS • SURVEYORS • PLANNERS
SAN RAMON, CALIFORNIA

SCALE: 1" = 60' MAY 2016

REFERENCES:

(#) INDICATES REFERENCE NUMBER
(1) PARCEL MAP (420 M 22)
(2) PARCEL MAP (417 M 3)
(3) RECORD OF SURVEY (306 M 39)
(4) PARCEL MAP (338 M 42)
(5) PARCEL MAP (422 M 9)
(6) PARCEL MAP (528 M 47)
(7) LOT LINE ADJUSTMENT 2015-004 DOC. NO. 23102251
(8) RECORD OF SURVEY (82 M 17)
(9) DOC. NO. BOOK 8680, PAGE 527
(10) RECORD OF SURVEY (253 M 7)
(11) RECORD OF SURVEY (350 M 21)
(12) RECORD OF SURVEY (299 M 19)
(13) RECORD OF SURVEY (754 M 24)
(14) CITY OF MILPITAS, ENGINEERING DIVISION, BENCHMARK SYSTEM, FEBRUARY 21, 2002
(15) DOC. NO. BOOK 8824, PAGE 144
(16) PARCEL MAP (517 M 42)
(17) BOOK 8243 O.R. PAGE 686

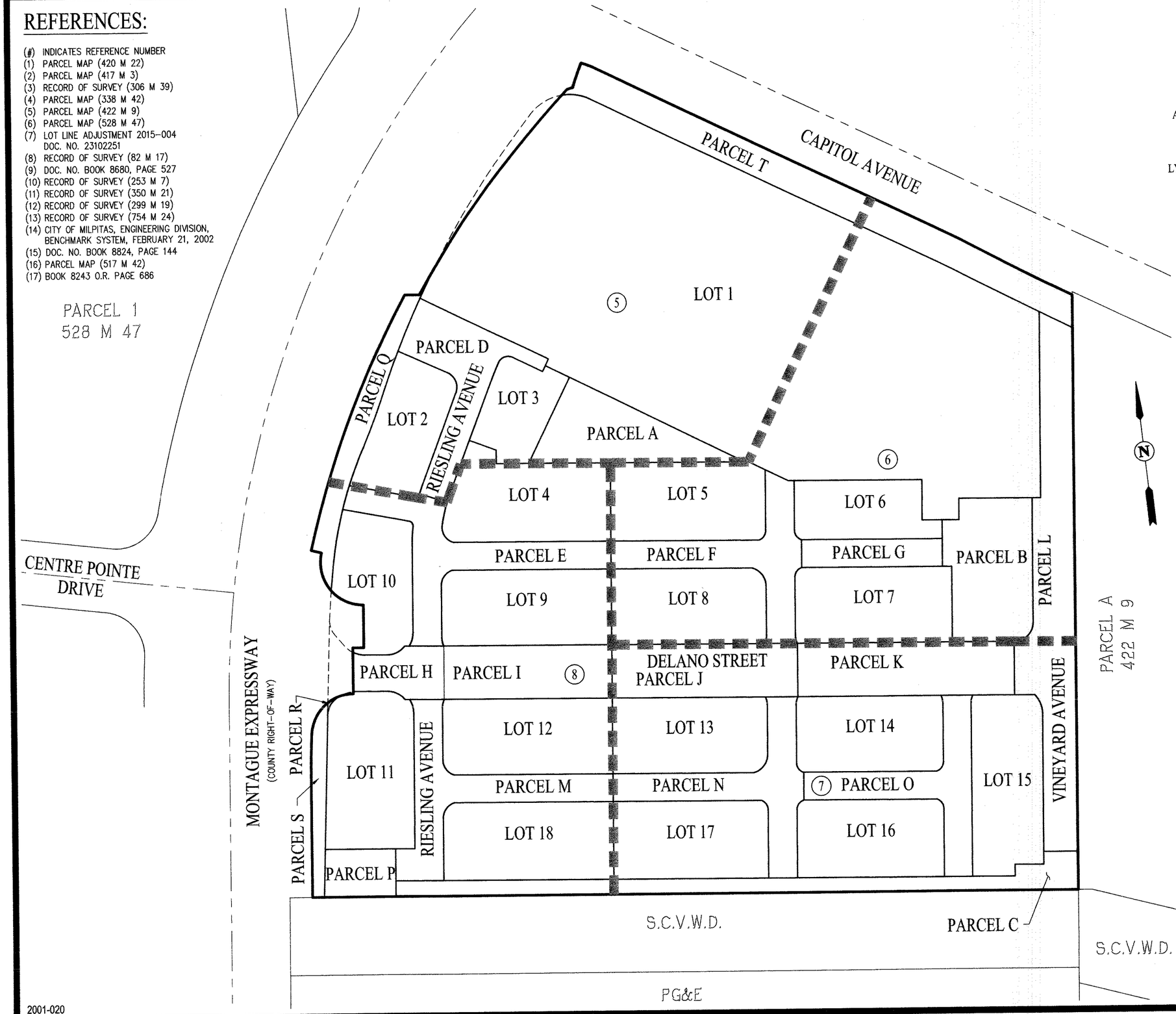

60' 0' 30' 60' 120' 240'
GRAPHIC SCALE

LEGEND

	DISTINCTIVE BOUNDARY LINE
	RIGHT OF WAY LINE
	LOT LINE
	EASEMENT LINE
	MONUMENT LINE
	TIE LINE (AT RIGHT ANGLES)
(R)	RADIAL
(T)	TOTAL
(LL)	LOT LINE
(ML-PL)	MONUMENT LINE TO PROPERTY LINE
(M-M)	MONUMENT TO MONUMENT
(M-PL)	MONUMENT TO PROPERTY LINE
(ML-ML)	MONUMENT LINE TO MONUMENT LINE
◉	FOUND STANDARD STREET MONUMENT, UNLESS OTHERWISE NOTED
◎	SET STANDARD STREET MONUMENT, LS 7960
●	FOUND MONUMENT AS NOTED
BAE	BRIDGE AND ACCESS EASEMENT
EAE	EMERGENCY VEHICLE ACCESS EASEMENT
PAE	PUBLIC ACCESS EASEMENT
PSUE	PUBLIC SERVICE AND UTILITY EASEMENT
AC	ACRE
SF	SQUARE FEET
SNF	SEARCHED FOR NOT FOUND
(#)	RECORD DATA
CR	CORNER RECORD
	NO VEHICULAR ACCESS
6	SHEET NUMBER

898/11/16

2001-020

SHEET 4 OF 9

1-257

CONFORMED COPY: This document has not been compared with the original.
SANTA CLARA COUNTY CLERK-RECORDER

TRACT 10324
450 MONTAGUE

CONSISTING OF 9 SHEETS
FOR CONDOMINIUM PURPOSES
BEING A SUBDIVISION OF PARCELS ONE AND TWO OF LOT LINE ADJUSTMENT 2015-004, RECORDED BY GRANT DEED, OCTOBER 8, 2015 IN DOCUMENT NO. 23102251, AND PARCEL ONE PER THAT CERTAIN GRANT DEED RECORDED APRIL 2, 2015 IN DOCUMENT NO. 22904355 OF OFFICIAL RECORDS SANTA CLARA COUNTY
LYING ENTIRELY WITHIN THE CITY OF MILPITAS, SANTA CLARA COUNTY

Carlson, Barbee & Gibson, Inc.
CIVIL ENGINEERS • SURVEYORS • PLANNERS
SAN RAMON, CALIFORNIA

SCALE: 1" = 30' MAY 2016

30' 0' 15' 30' 60' 120'
GRAPHIC SCALE

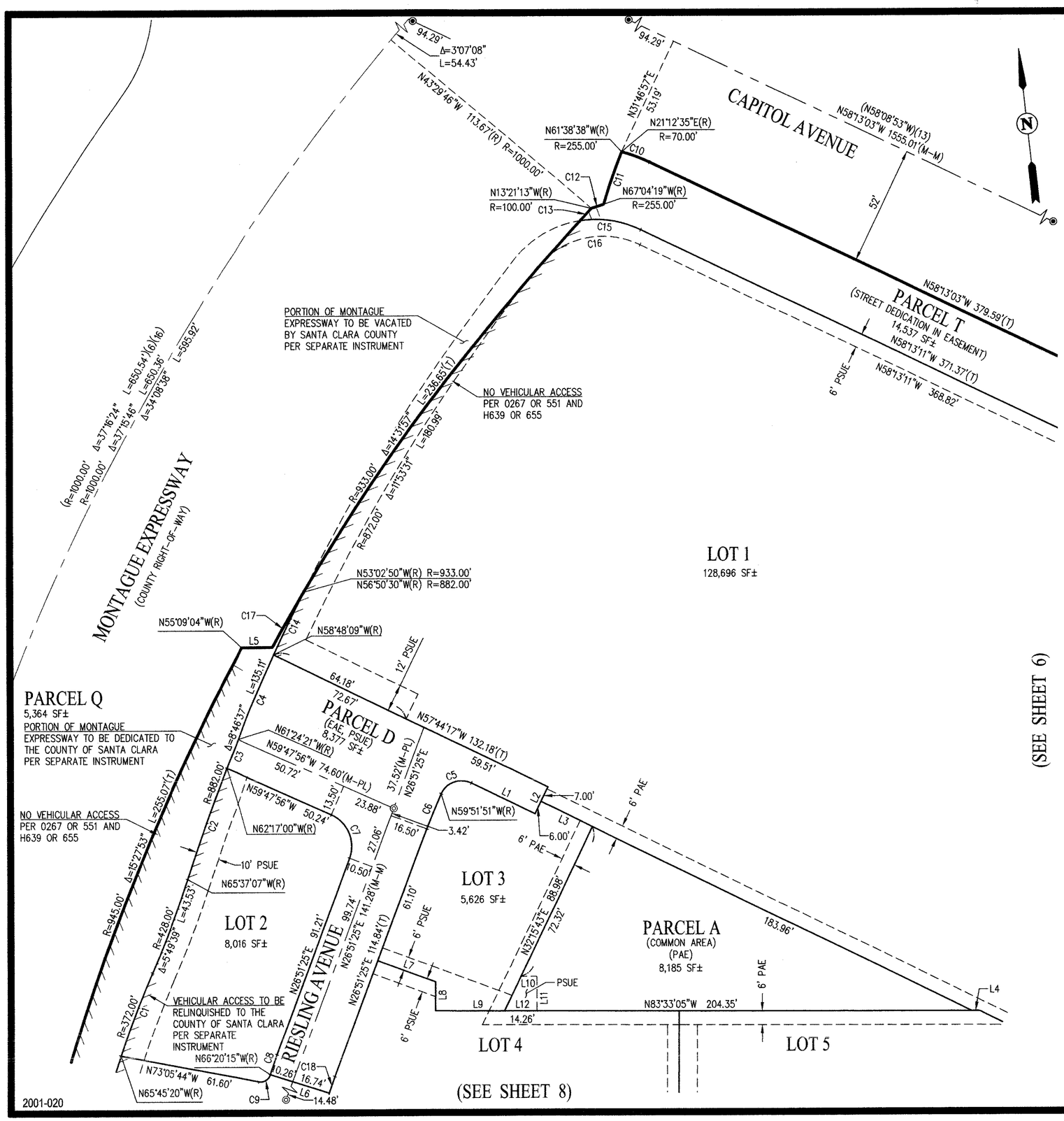

LINE TABLE		
NO	BEARING	LENGTH
L1	N57°44'17"W	30.81'
L2	N32°15'43"E	13.00'
L3	N57°44'17"W	25.12'
L4	N83°33'05"W	3.50'
L5	N83°42'50"W	13.69'
L6	N66°20'15"W	27.00'
L7	N63°08'35"W	26.57'
L8	N06°26'55"E	12.59'
L9	N83°33'05"W	29.61'
L10	N83°33'05"W	7.00'
L11	N06°26'55"E	15.00'
L12	N83°33'05"W	14.26'

CURVE TABLE			
NO	RADIUS	DELTA	LENGTH
C1	372.00'	5°57'53"	38.73'
C2	882.00'	3°20'07"	51.34'
C3	882.00'	0°52'39"	13.51'
C4	882.00'	2°36'12"	40.07'
C5	9.50'	92°07'34"	15.28'
C6	286.50'	3°16'43"	16.39'
C7	15.00'	86°39'21"	22.69'
C8	163.50'	3°11'41"	9.12'
C9	4.50'	83°14'31"	6.54'
C10	70.00'	10°34'22"	12.92'
C11	255.00'	5°25'41"	24.16'
C12	100.00'	3°16'19"	5.71'
C13	933.00'	0°27'00"	7.33'
C14	882.00'	1°57'39"	30.19'
C15	46.00'	34°06'42"	27.39'
C16	38.00'	64°26'35"	42.74'
C17	933.00'	1°42'07"	27.71'
C18	136.50'	3°11'41"	7.61'

LEGEND

———	DISTINCTIVE BOUNDARY LINE
———	RIGHT OF WAY LINE
———	LOT LINE
- - - - -	EASEMENT LINE
—·—·—	MONUMENT LINE
- - - - -	TIE LINE (AT RIGHT ANGLES)
(R)	RADIAL
(T)	TOTAL
(LL)	LOT LINE
(ML-PL)	MONUMENT LINE TO PROPERTY LINE
(M-M)	MONUMENT TO MONUMENT
(M-PL)	MONUMENT TO PROPERTY LINE
(ML-ML)	MONUMENT LINE TO MONUMENT LINE
◉	FOUND STANDARD STREET MONUMENT, UNLESS OTHERWISE NOTED
◎	SET STANDARD STREET MONUMENT, LS 7960
●	FOUND MONUMENT AS NOTED
BAE	BRIDGE AND ACCESS EASEMENT
EAE	EMERGENCY VEHICLE ACCESS EASEMENT
PAE	PUBLIC ACCESS EASEMENT
PSUE	PUBLIC SERVICE AND UTILITY EASEMENT
AC	ACRE
SF	SQUARE FEET
SNF	SEARCHED FOR NOT FOUND
(#)	RECORD DATA
CR	CORNER RECORD
//////////	NO VEHICULAR ACCESS

REFERENCES:

(#) INDICATES REFERENCE NUMBER
(1) PARCEL MAP (420 M 22)
(2) PARCEL MAP (417 M 3)
(3) RECORD OF SURVEY (306 M 39)
(4) PARCEL MAP (338 M 42)
(5) PARCEL MAP (422 M 9)
(6) PARCEL MAP (528 M 47)
(7) LOT LINE ADJUSTMENT 2015-004 DOC. NO. 23102251
(8) RECORD OF SURVEY (82 M 17)
(9) DOC. NO. BOOK 8680, PAGE 527
(10) RECORD OF SURVEY (253 M 7)
(11) RECORD OF SURVEY (350 M 21)
(12) RECORD OF SURVEY (299 M 19)
(13) RECORD OF SURVEY (754 M 24)
(14) CITY OF MILPITAS, ENGINEERING DIVISION, BENCHMARK SYSTEM, FEBRUARY 21, 2002
(15) DOC. NO. BOOK 8824, PAGE 144
(16) PARCEL MAP (517 M 42)
(17) BOOK 8243 O.R. PAGE 686

NOTE:

1. DUE TO ROUNDING, THE SUM OF THE INDIVIDUAL DIMENSIONS MAY NOT EQUAL THE OVERALL DIMENSION.

898/12/16

2001-020

SHEET 5 OF 9

1-257

CONFORMED COPY: This document has not been compared with the original.
SANTA CLARA COUNTY CLERK-RECORDER

TRACT 10324
450 MONTAGUE

CONSISTING OF 9 SHEETS
FOR CONDOMINIUM PURPOSES
BEING A SUBDIVISION OF PARCELS ONE AND TWO OF LOT LINE ADJUSTMENT 2015-004, RECORDED BY GRANT DEED, OCTOBER 8, 2015 IN DOCUMENT NO. 23102251, AND PARCEL ONE PER THAT CERTAIN GRANT DEED RECORDED APRIL 2, 2015 IN DOCUMENT NO. 22904355 OF OFFICIAL RECORDS SANTA CLARA COUNTY
LYING ENTIRELY WITHIN THE CITY OF MILPITAS, SANTA CLARA COUNTY

Carlson, Barbee & Gibson, Inc.
CIVIL ENGINEERS • SURVEYORS • PLANNERS
SAN RAMON, CALIFORNIA

SCALE: 1" = 30' MAY 2016

30' 0' 15' 30' 60' 120'
GRAPHIC SCALE

REFERENCES:

(#) INDICATES REFERENCE NUMBER
(1) PARCEL MAP (420 M 22)
(2) PARCEL MAP (417 M 3)
(3) RECORD OF SURVEY (306 M 39)
(4) PARCEL MAP (338 M 42)
(5) PARCEL MAP (422 M 9)
(6) PARCEL MAP (528 M 47)
(7) LOT LINE ADJUSTMENT 2015-004 DOC. NO. 23102251
(8) RECORD OF SURVEY (82 M 17)
(9) DOC. NO. BOOK 8680, PAGE 527
(10) RECORD OF SURVEY (253 M 7)
(11) RECORD OF SURVEY (350 M 21)
(12) RECORD OF SURVEY (299 M 19)
(13) RECORD OF SURVEY (754 M 24)
(14) CITY OF MILPITAS, ENGINEERING DIVISION, BENCHMARK SYSTEM, FEBRUARY 21, 2002
(15) DOC. NO. BOOK 8824, PAGE 144
(16) PARCEL MAP (517 M 42)
(17) BOOK 8243 O.R. PAGE 686

LINE TABLE

NO	BEARING	LENGTH
L1	N83°33'05"W	3.50'
L2	N06°26'55"E	19.96'
L3	N83°33'05"W	34.88'
L4	N58°06'37"W	0.85'
L5	N57°06'54"W	14.78'
L6	N58°06'37"W	19.34'
L7	N58°06'37"W	20.19'
L8	N06°26'55"E	26.00'

CURVE TABLE

NO	RADIUS	DELTA	LENGTH
C1	9.50'	71°19'42"	11.83'
C2	9.50'	71°19'42"	11.83'
C3	9.50'	71°19'42"	11.83'
C4	17.50'	76°16'15"	23.30'
C5	19.50'	24°13'15"	8.24'
C6	19.50'	24°13'15"	8.24'
C7	18.00'	90°00'00"	28.27'
C8	606.00'	1°50'51"	19.54'

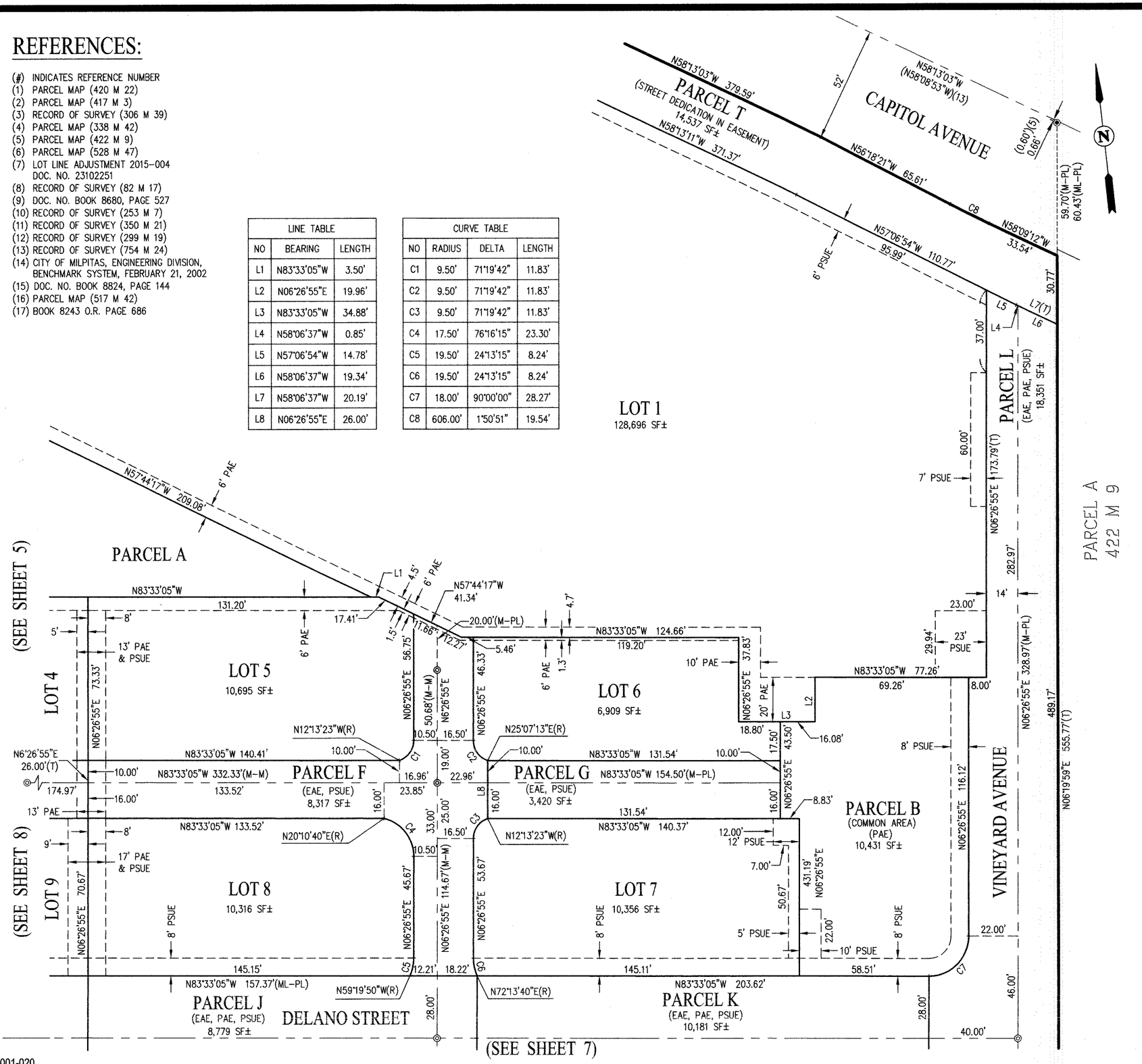

LEGEND

	DISTINCTIVE BOUNDARY LINE
	RIGHT OF WAY LINE
	LOT LINE
	EASEMENT LINE
	MONUMENT LINE
	TIE LINE (AT RIGHT ANGLES)
(R)	RADIAL
(T)	TOTAL
(LL)	LOT LINE
(ML-PL)	MONUMENT LINE TO PROPERTY LINE
(M-M)	MONUMENT TO MONUMENT
(M-PL)	MONUMENT TO PROPERTY LINE
(ML-ML)	MONUMENT LINE TO MONUMENT LINE
◉	FOUND STANDARD STREET MONUMENT, UNLESS OTHERWISE NOTED
◎	SET STANDARD STREET MONUMENT, LS 7960
●	FOUND MONUMENT AS NOTED
BAE	BRIDGE AND ACCESS EASEMENT
EAE	EMERGENCY VEHICLE ACCESS EASEMENT
PAE	PUBLIC ACCESS EASEMENT
PSUE	PUBLIC SERVICE AND UTILITY EASEMENT
AC	ACRE
SF	SQUARE FEET
SNF	SEARCHED FOR NOT FOUND
(#)	RECORD DATA
CR	CORNER RECORD
	NO VEHICULAR ACCESS

NOTE:

1. DUE TO ROUNDING, THE SUM OF THE INDIVIDUAL DIMENSIONS MAY NOT EQUAL THE OVERALL DIMENSION.

898/13/16

2001-020

SHEET 6 OF 9

1-257

13

CONFORMED COPY: This document has not been compared with the original.
SANTA CLARA COUNTY CLERK-RECORDER

TRACT 10324
450 MONTAGUE

CONSISTING OF 9 SHEETS
FOR CONDOMINIUM PURPOSES
BEING A SUBDIVISION OF PARCELS ONE AND TWO OF LOT LINE ADJUSTMENT 2015-004, RECORDED BY GRANT DEED, OCTOBER 8, 2015 IN DOCUMENT NO. 23102251, AND PARCEL ONE PER THAT CERTAIN GRANT DEED RECORDED APRIL 2, 2015 IN DOCUMENT NO. 22904355 OF OFFICIAL RECORDS SANTA CLARA COUNTY
LYING ENTIRELY WITHIN THE CITY OF MILPITAS, SANTA CLARA COUNTY

Carlson, Barbee & Gibson, Inc.
CIVIL ENGINEERS • SURVEYORS • PLANNERS
SAN RAMON, CALIFORNIA

SCALE: 1" = 30' MAY 2016

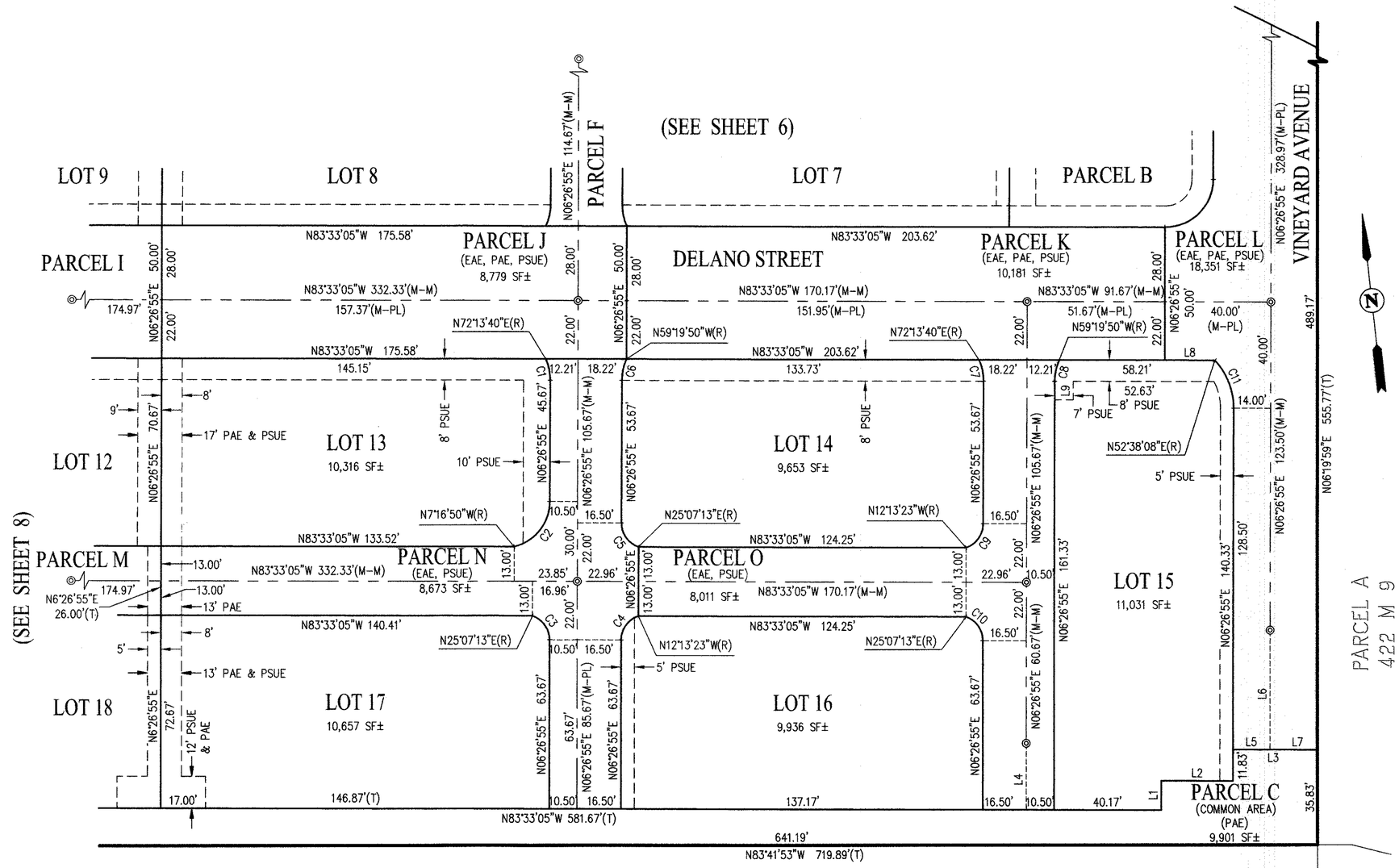

S.C.V.W.D.
8824 OR 144

LEGEND

———	DISTINCTIVE BOUNDARY LINE
———	RIGHT OF WAY LINE
———	LOT LINE
- - - -	EASEMENT LINE
—— — — ——	MONUMENT LINE
- - - - - -	TIE LINE (AT RIGHT ANGLES)
(R)	RADIAL
(T)	TOTAL
(LL)	LOT LINE
(ML–PL)	MONUMENT LINE TO PROPERTY LINE
(M–M)	MONUMENT TO MONUMENT
(M–PL)	MONUMENT TO PROPERTY LINE
(ML–ML)	MONUMENT LINE TO MONUMENT LINE
◉	FOUND STANDARD STREET MONUMENT, UNLESS OTHERWISE NOTED
◎	SET STANDARD STREET MONUMENT, LS 7960
●	FOUND MONUMENT AS NOTED
BAE	BRIDGE AND ACCESS EASEMENT
EAE	EMERGENCY VEHICLE ACCESS EASEMENT
PAE	PUBLIC ACCESS EASEMENT
PSUE	PUBLIC SERVICE AND UTILITY EASEMENT
AC	ACRE
SF	SQUARE FEET
SNF	SEARCHED FOR NOT FOUND
(#)	RECORD DATA
CR	CORNER RECORD
//////////	NO VEHICULAR ACCESS

LINE TABLE

NO	BEARING	LENGTH	
L1	N06°26'55"E	11.00'	
L2	N83°33'05"W	27.00'	
L3	N83°33'05"W	32.45'	
L4	N06°26'55"E	25.00'	(M–PL)
L5	N83°33'05"W	14.00'	
L6	N06°26'55"E	45.00'	(M–PL)
L7	N83°33'05"W	18.45'	
L8	N83°33'05"W	18.76'	
L9	N06°26'55"E	7.00'	

CURVE TABLE

NO	RADIUS	DELTA	LENGTH
C1	19.50'	24°13'15"	8.24'
C2	17.50'	76°16'15"	23.30'
C3	9.50'	71°19'42"	11.83'
C4	9.50'	71°19'42"	11.83'
C5	9.50'	71°19'42"	11.83'
C6	19.50'	24°13'15"	8.24'
C7	19.50'	24°13'15"	8.24'
C8	19.50'	24°13'15"	8.24'
C9	9.50'	71°19'42"	11.83'
C10	9.50'	71°19'42"	11.83'
C11	26.00'	43°48'47"	19.88'

REFERENCES:

(#) INDICATES REFERENCE NUMBER
(1) PARCEL MAP (420 M 22)
(2) PARCEL MAP (417 M 3)
(3) RECORD OF SURVEY (306 M 39)
(4) PARCEL MAP (338 M 42)
(5) PARCEL MAP (422 M 9)
(6) PARCEL MAP (528 M 47)
(7) LOT LINE ADJUSTMENT 2015–004 DOC. NO. 23102251
(8) RECORD OF SURVEY (82 M 17)
(9) DOC. NO. BOOK 8680, PAGE 527
(10) RECORD OF SURVEY (253 M 7)
(11) RECORD OF SURVEY (350 M 21)
(12) RECORD OF SURVEY (299 M 19)
(13) RECORD OF SURVEY (754 M 24)
(14) CITY OF MILPITAS, ENGINEERING DIVISION, BENCHMARK SYSTEM, FEBRUARY 21, 2002
(15) DOC. NO. BOOK 8824, PAGE 144
(16) PARCEL MAP (517 M 42)
(17) BOOK 8243 O.R. PAGE 686

NOTE:

1. DUE TO ROUNDING, THE SUM OF THE INDIVIDUAL DIMENSIONS MAY NOT EQUAL THE OVERALL DIMENSION.

2001-020

SHEET 7 OF 9

898/14/16

1-257

CONFORMED COPY: This document has not been compared with the original.
SANTA CLARA COUNTY CLERK-RECORDER

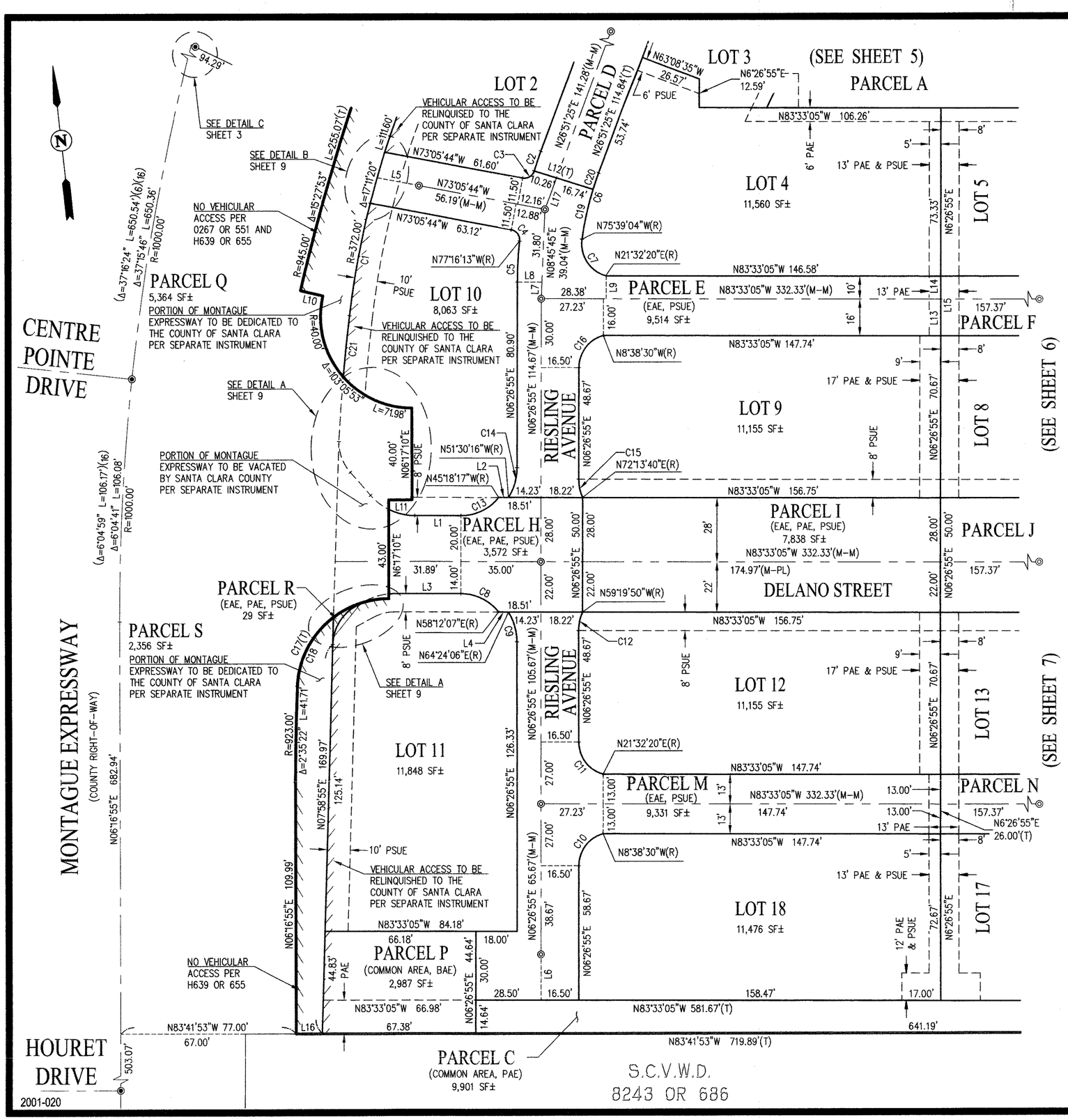

CURVE TABLE			
NO	RADIUS	DELTA	LENGTH
C1	372.00'	7°39'51"	49.76'
C2	163.50'	3°11'41"	9.12'
C3	4.50'	83°14'31"	6.54'
C4	4.50'	85°49'31"	6.74'
C5	163.50'	6°16'52"	17.92'
C6	136.50'	12°30'30"	29.80'
C7	14.50'	82°48'36"	20.96'
C8	21.00'	51°45'12"	18.97'
C9	24.50'	32°02'49"	13.70'
C10	14.50'	74°54'35"	18.96'
C11	14.50'	74°54'35"	18.96'
C12	19.50'	24°13'15"	8.24'
C13	21.00'	51°45'12"	18.97'
C14	24.50'	32°02'49"	13.70'
C15	19.50'	24°13'15"	8.24'
C16	14.50'	74°54'35"	18.96'
C17	40.00'	87°24'53"	61.03'
C18	40.00'	50°12'24"	35.05'
C19	136.50'	9°18'49"	22.19'
C20	136.50'	3°11'41"	7.61'
C21	844.00'	1°49'37"	26.91'

LINE TABLE			
NO	BEARING	LENGTH	
L1	N83°33'05"W	20.36'	
L2	N83°33'05"W	4.27'	
L3	N83°33'05"W	29.69'	
L4	N83°33'05"W	4.27'	
L5	N73°05'44"W	18.87'	(M-PL)
L6	N06°26'55"E	20.00'	
L7	N08°45'45"E	7.24'	(M-PL)
L8	N83°33'05"W	10.79'	
L9	N06°26'55"E	10.00'	
L10	N70°36'57"W	10.00'	(R)
L11	N83°42'50"W	10.39'	
L12	N66°20'15"W	27.00'	(R)
L13	N06°26'55"E	16.00'	
L14	N06°26'55"E	10.00'	
L15	N06°26'55"E	26.00'	
L16	N83°41'53"W	11.32'	
L17	N26°51'25"E	14.48'	(M-PL)

TRACT 10324
450 MONTAGUE

CONSISTING OF 9 SHEETS
FOR CONDOMINIUM PURPOSES
BEING A SUBDIVISION OF PARCELS ONE AND TWO OF LOT LINE ADJUSTMENT 2015-004, RECORDED BY GRANT DEED, OCTOBER 8, 2015 IN DOCUMENT NO. 23102251, AND PARCEL ONE PER THAT CERTAIN GRANT DEED RECORDED APRIL 2, 2015 IN DOCUMENT NO. 22904355 OF OFFICIAL RECORDS SANTA CLARA COUNTY
LYING ENTIRELY WITHIN THE CITY OF MILPITAS, SANTA CLARA COUNTY

Carlson, Barbee & Gibson, Inc.
CIVIL ENGINEERS • SURVEYORS • PLANNERS
SAN RAMON, CALIFORNIA

SCALE: 1" = 30' MAY 2016

30' 0' 15' 30' 60' 120'
GRAPHIC SCALE

LEGEND

	DISTINCTIVE BOUNDARY LINE
	RIGHT OF WAY LINE
	LOT LINE
	EASEMENT LINE
	MONUMENT LINE
	TIE LINE (AT RIGHT ANGLES)
(R)	RADIAL
(T)	TOTAL
(LL)	LOT LINE
(ML-PL)	MONUMENT LINE TO PROPERTY LINE
(M-M)	MONUMENT TO MONUMENT
(M-PL)	MONUMENT TO PROPERTY LINE
(ML-ML)	MONUMENT LINE TO MONUMENT LINE
◉	FOUND STANDARD STREET MONUMENT, UNLESS OTHERWISE NOTED
◎	SET STANDARD STREET MONUMENT, LS 7960
●	FOUND MONUMENT AS NOTED
BAE	BRIDGE AND ACCESS EASEMENT
EAE	EMERGENCY VEHICLE ACCESS EASEMENT
PAE	PUBLIC ACCESS EASEMENT
PSUE	PUBLIC SERVICE AND UTILITY EASEMENT
AC	ACRE
SF	SQUARE FEET
SNF	SEARCHED FOR NOT FOUND
(#)	RECORD DATA
CR	CORNER RECORD
	NO VEHICULAR ACCESS

NOTE:

1. DUE TO ROUNDING, THE SUM OF THE INDIVIDUAL DIMENSIONS MAY NOT EQUAL THE OVERALL DIMENSION.

REFERENCES:

(#) INDICATES REFERENCE NUMBER
(1) PARCEL MAP (420 M 22)
(2) PARCEL MAP (417 M 3)
(3) RECORD OF SURVEY (306 M 39)
(4) PARCEL MAP (338 M 42)
(5) PARCEL MAP (422 M 9)
(6) PARCEL MAP (528 M 47)
(7) LOT LINE ADJUSTMENT 2015-004 DOC. NO. 23102251
(8) RECORD OF SURVEY (82 M 17)
(9) DOC. NO. BOOK 8680, PAGE 527
(10) RECORD OF SURVEY (253 M 7)
(11) RECORD OF SURVEY (350 M 21)
(12) RECORD OF SURVEY (299 M 19)
(13) RECORD OF SURVEY (754 M 24)
(14) CITY OF MILPITAS, ENGINEERING DIVISION, BENCHMARK SYSTEM, FEBRUARY 21, 2002
(15) DOC. NO. BOOK 8824, PAGE 144
(16) PARCEL MAP (517 M 42)
(17) BOOK 8243 O.R. PAGE 686

898/15/16

SHEET 8 OF 9

1-257 15

CONFORMED COPY: This document has not been compared with the original.
SANTA CLARA COUNTY CLERK-RECORDER

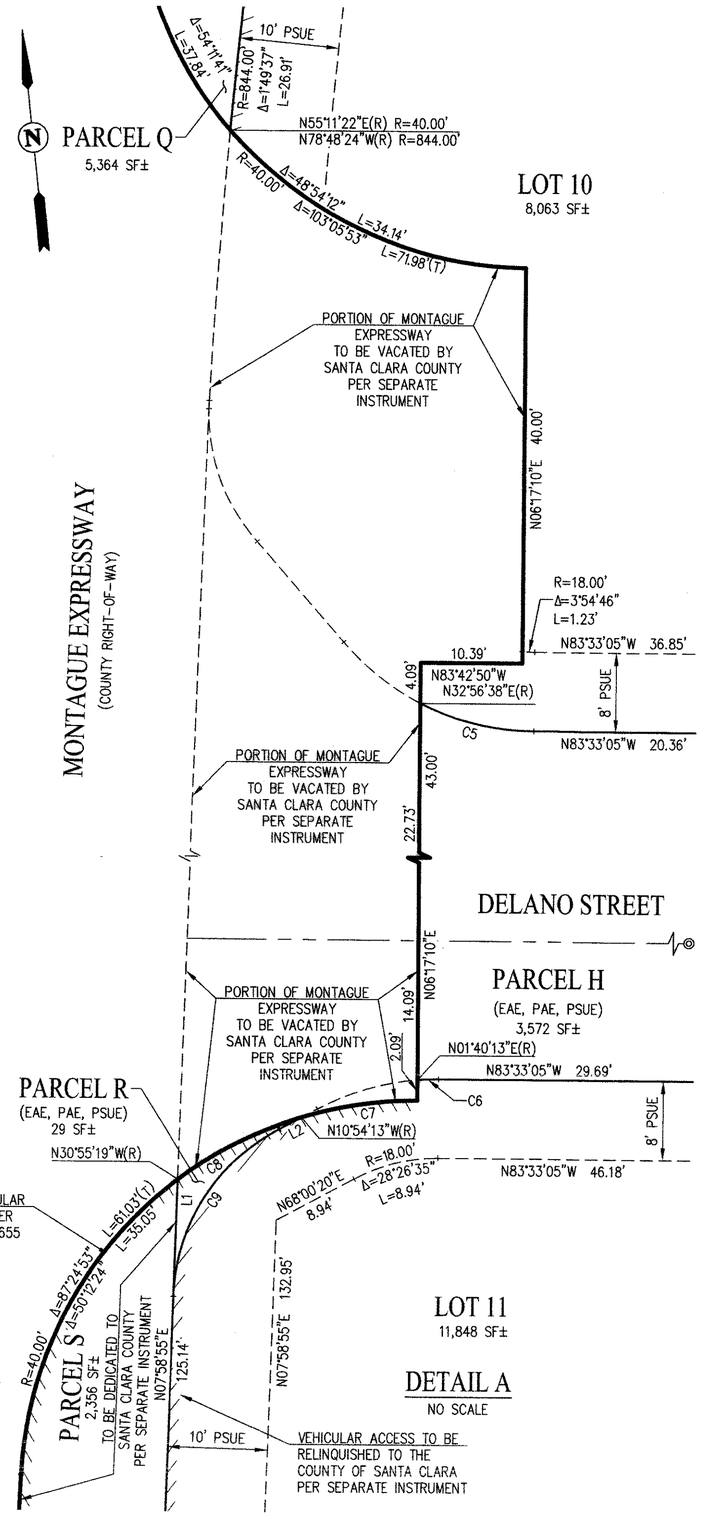

CURVE TABLE			
NO	RADIUS	DELTA	LENGTH
C1	372.00'	1°46'58"	11.57'
C2	372.00'	1°46'38"	11.54'
C3	372.00'	7°39'51"	49.76'
C4	372.00'	5°57'53"	38.73'
C5	26.00'	26°29'43"	12.02'
C6	26.00'	4°46'42"	2.17'
C7	40.00'	17°11'23"	12.00'
C8	40.00'	20°01'06"	13.98'
C9	20.00'	60°01'25"	20.95'

LINE TABLE		
NO	BEARING	LENGTH
L1	N07°58'55"E	11.86'
L2	N68°00'20"E	2.50'

NOTE:

1. DUE TO ROUNDING, THE SUM OF THE INDIVIDUAL DIMENSIONS MAY NOT EQUAL THE OVERALL DIMENSION.

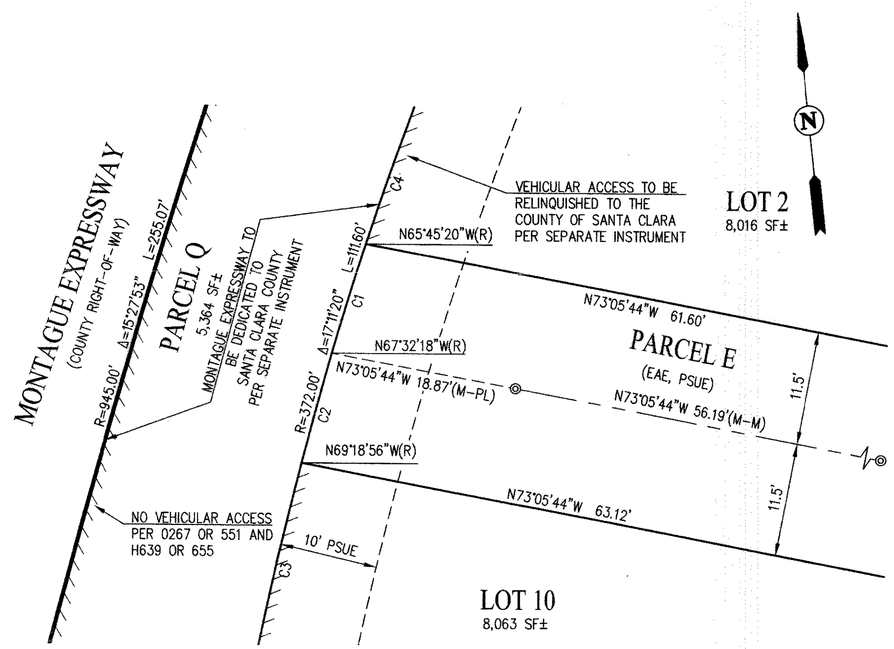

TRACT 10324
450 MONTAGUE

CONSISTING OF 9 SHEETS
FOR CONDOMINIUM PURPOSES
BEING A SUBDIVISION OF PARCELS ONE AND TWO OF LOT LINE ADJUSTMENT 2015-004, RECORDED BY GRANT DEED, OCTOBER 8, 2015 IN DOCUMENT NO. 23102251, AND PARCEL ONE PER THAT CERTAIN GRANT DEED RECORDED APRIL 2, 2015 IN DOCUMENT NO. 22904355 OF OFFICIAL RECORDS SANTA CLARA COUNTY
LYING ENTIRELY WITHIN THE CITY OF MILPITAS, SANTA CLARA COUNTY

Carlson, Barbee & Gibson, Inc.
CIVIL ENGINEERS • SURVEYORS • PLANNERS
SAN RAMON, CALIFORNIA

MAY 2016

LEGEND

━━━━━	DISTINCTIVE BOUNDARY LINE
═══	RIGHT OF WAY LINE
═══	LOT LINE
- - - - - -	EASEMENT LINE
═ - - ═	MONUMENT LINE
- - - - - -	TIE LINE (AT RIGHT ANGLES)
(R)	RADIAL
(T)	TOTAL
(LL)	LOT LINE
(ML-PL)	MONUMENT LINE TO PROPERTY LINE
(M-M)	MONUMENT TO MONUMENT
(M-PL)	MONUMENT TO PROPERTY LINE
(ML-ML)	MONUMENT LINE TO MONUMENT LINE
◉	FOUND STANDARD STREET MONUMENT, UNLESS OTHERWISE NOTED
◎	SET STANDARD STREET MONUMENT, LS 7960
●	FOUND MONUMENT AS NOTED
BAE	BRIDGE AND ACCESS EASEMENT
EAE	EMERGENCY VEHICLE ACCESS EASEMENT
PAE	PUBLIC ACCESS EASEMENT
PSUE	PUBLIC SERVICE AND UTILITY EASEMENT
AC	ACRE
SF	SQUARE FEET
SNF	SEARCHED FOR NOT FOUND
(#)	RECORD DATA
CR	CORNER RECORD
/ / / / / / / /	NO VEHICULAR ACCESS

REFERENCES:

(#) INDICATES REFERENCE NUMBER
(1) PARCEL MAP (420 M 22)
(2) PARCEL MAP (417 M 3)
(3) RECORD OF SURVEY (306 M 39)
(4) PARCEL MAP (338 M 42)
(5) PARCEL MAP (422 M 9)
(6) PARCEL MAP (528 M 47)
(7) LOT LINE ADJUSTMENT 2015-004 DOC. NO. 23102251
(8) RECORD OF SURVEY (82 M 17)
(9) DOC. NO. BOOK 8680, PAGE 527
(10) RECORD OF SURVEY (253 M 7)
(11) RECORD OF SURVEY (350 M 21)
(12) RECORD OF SURVEY (299 M 19)
(13) RECORD OF SURVEY (754 M 24)
(14) CITY OF MILPITAS, ENGINEERING DIVISION, BENCHMARK SYSTEM, FEBRUARY 21, 2002
(15) DOC. NO. BOOK 8824, PAGE 144
(16) PARCEL MAP (517 M 42)
(17) BOOK 8243 O.R. PAGE 686

898/16/16

2001-020

SHEET 9 OF 9

1-257 16

APPENDIX B

Tract 10363 Centre Pointe

OWNER'S STATEMENT

WE HEREBY STATE THAT WE ARE THE OWNERS OF OR HAVE SOME RIGHT, TITLE, OR INTEREST IN AND TO THE REAL PROPERTY INCLUDED WITHIN THE SUBDIVISION SHOWN HEREON; THAT WE ARE THE ONLY PERSONS WHOSE CONSENT IS NECESSARY TO PASS A CLEAR TITLE TO SAID REAL PROPERTY; THAT WE CONSENT TO THE MAKING AND FILING OF THIS SUBDIVISION MAP AS SHOWN WITHIN THE DISTINCTIVE SYMBOL LINE.

THE REAL PROPERTY DESCRIBED BELOW IS DEDICATED AS AN EASEMENT FOR PUBLIC PURPOSES:

WE HEREBY OFFER FOR DEDICATION TO THE CITY OF MILPITAS THE EASEMENTS DELINEATED HEREON AND DESIGNATED AS "STREET DEDICATION IN EASEMENT" FOR PUBLIC USE FOR ROADWAY PURPOSES, OPERATION, ALTERATION, RELOCATION, MAINTENANCE, REPAIR AND REPLACEMENT OF ALL PUBLIC SERVICE FACILITIES AND THEIR APPURTENANCES OVER, UNDER, ALONG, AND ACROSS THE FOLLOWING:

1. "PARCEL G" AND "PARCEL H" (SHOWN AS CENTRE POINTE DRIVE)

WE HEREBY OFFER FOR DEDICATION TO THE CITY OF MILPITAS FOR PUBLIC USE FOR OPERATION, ALTERATION, RELOCATION, MAINTENANCE, REPAIR AND REPLACEMENT OF ALL PUBLIC SERVICE FACILITIES AND THEIR APPURTENANCES, OVER, UNDER, ALONG, AND ACROSS THE FOLLOWING:

1. EASEMENT FOR EMERGENCY VEHICLE ACCESS PURPOSES (EAE).
2. EASEMENT FOR PUBLIC SERVICE, UTILITY AND SIDEWALK EASEMENT PURPOSES (PSUSE).
3. EASEMENT FOR FUTURE BRIDGE IMPROVEMENTS AND PUBLIC ACCESS PURPOSES (BAE).
4. EASEMENT FOR SURFACE DRAINAGE RELEASE OF STORM WATER (SDRE).

MODIFICATION OF THE PRIVATE STREETS VERTICAL AND HORIZONTAL GEOMETRY, WITHIN SAID EASEMENT AREAS, SHALL BE PROHIBITED WITHOUT CITY APPROVAL TO AVOID THE NEGATIVE IMPACT OF STORM WATER TO SURROUNDING SUBDIVISIONS. AN ANALYSIS OF THE 100-YEAR HYDRAULIC CONDITIONS WAS PREPARED BY SCHAAF AND WHEELER, CONSULTING CIVIL ENGINEERS, IN THE DOCUMENT ENTITLED "FINAL MEMO", JOB NO. DRHB.07.16, DATED JUNE 17, 2016, SIGNED BY CAITLIN J. GILMORE, PE, RCE NO. 76810, AND IS ON FILE WITH THE CITY OF MILPITAS.

THE ABOVE MENTIONED EASEMENTS (PSUSE), (EAE), AND (SDRE) SHALL REMAIN OPEN AND FREE FROM BUILDINGS AND STRUCTURES OF ANY KIND EXCEPT UTILITY SERVICE AND UTILITY STRUCTURES, CURBS, SIDEWALKS, APPURTENANCES TO THE ABOVE, AND ALL LAWFUL UNSUPPORTED BUILDING OVERHANGS. UNOBSTRUCTED CONTINUOUS ACCESS SHALL BE MAINTAINED AT ALL TIMES.

WE HEREBY RETAIN FOR THE PRIVATE USE OF THE LOT OWNERS WITHIN THIS SUBDIVISION, THEIR LICENSEES, VISITORS AND TENANTS, WITH MAINTENANCE BY THE HOMEOWNERS ASSOCIATION AS STATED IN THE DECLARATION OF COVENANTS, CONDITIONS AND RESTRICTIONS CREATED FOR "TRACT 10363, CENTRE POINTE", THE FOLLOWING:

1. ALLEY 1A, ALLEY 1B, ALLEY 2A, ALLEY 2B, ALLEY 2C, ALLEY 2D, DRIVE 1A, DRIVE 1B, DRIVE 1C, DRIVE 2A, WILD ROSE WAY, COFFEE BERRY LANE AND DRIVE 2D AS COMMON AREA FOR PRIVATE STREET PURPOSES. SAID PRIVATE STREETS SHALL BE CONVEYED TO, AND MAINTAINED BY, THE HOMEOWNERS ASSOCIATION CREATED FOR "TRACT 10363, CENTRE POINTE", AS STATED IN THE COVENANTS, CONDITIONS, AND RESTRICTIONS. SAID STREETS ARE TO REMAIN PRIVATE AND ARE NOT OFFERED FOR DEDICATION TO THE CITY OF MILPITAS.
2. PARCEL A, PARCEL B, PARCEL C, PARCEL D, PARCEL E, AND PARCEL I AS COMMON AREA. SAID PARCELS SHALL BE CONVEYED TO, AND MAINTAINED BY, THE HOMEOWNERS ASSOCIATION CREATED FOR "TRACT 10363, CENTRE POINTE", AS STATED IN THE COVENANTS, CONDITIONS, AND RESTRICTIONS. SAID PARCELS SHALL REMAIN FREE FROM HABITABLE STRUCTURES.
3. EASEMENTS FOR PRIVATE SERVICES AND UTILITY EASEMENT PURPOSES (PRUE), INCLUDING, BUT NOT LIMITED TO, THE CONSTRUCTION AND MAINTENANCE OF SIDEWALKS, CONDUITS FOR STORM DRAINS, SANITARY SEWERS, WATER LINES, AND THEIR APPURTENANCES. SAID EASEMENTS SHALL REMAIN OPEN AND FREE FROM BUILDINGS AND STRUCTURES AND THEIR APPURTENANCES, EXCEPT FOR IRRIGATION SYSTEMS AND THEIR APPURTENANCES, LAWFUL FENCES, WALKWAYS, AND ALL LAWFUL UNSUPPORTED BUILDING OVERHANGS. UNOBSTRUCTED CONTINUOUS ACCESS SHALL BE MAINTAINED AT ALL TIMES.
4. "PARCEL F" IS INTENDED FOR FUTURE CONVEYANCE TO THE COUNTY OF SANTA CLARA FOR RIGHT OF WAY PURPOSES, AND UNTIL SUCH TIME THAT SAID CONVEYANCE OCCURS, SAID PARCEL SHALL BE RETAINED, OWNED AND MAINTAINED BY THE HOMEOWNERS ASSOCIATION CREATED FOR "TRACT 10363, CENTRE POINTE".

THE STREETS DESIGNATED AS (PRIVATE) AND SHOWN AS, PARCEL J (MARKET STREET), PARCEL K (BOND STREET), AND PARCEL L (BAJA ROSE STREET) ON THIS MAP ARE NOT PART OF THE CITY OF MILPITAS STREET SYSTEM AND ARE NOT ACCEPTED FOR PUBLIC MAINTENANCE.

WATER, SANITARY SEWER, AND STORM DRAIN UTILITIES WITHIN THE DISTINCTIVE SYMBOL LINE OF THIS MAP ARE PRIVATELY OWNED AND MAINTAINED BY THE OWNER, OR THEIR ASSIGNED, WITH THE EXCEPTION OF THE FOLLOWING:

1. WATER IN PARCEL G, PARCEL H, BAJA ROSE STREET, BOND STREET, AND MARKET STREET
2. STORM DRAIN IN PARCEL G, BAJA ROSE STREET, AND BOND STREET SOUTH OF BAJA ROSE STREET.

ALL DRY UTILITIES (GAS, ELECTRIC, TELEPHONE, CABLE, ETC.) WITHIN THE DISTINCTIVE SYMBOL LINE OF THIS MAP ARE OWNED AND MAINTAINED BY THE RESPECTIVE UTILITY COMPANY.

OWNER: D.R. HORTON CA3, INC., A DELAWARE CORPORATION

BY: _____ BY: _____

NAME: Dean K Mills NAME: _____

TITLE: Vice President TITLE: _____

OWNER ACKNOWLEDGMENT

A NOTARY PUBLIC OR OTHER OFFICER COMPLETING THIS CERTIFICATE VERIFIES ONLY THE IDENTITY OF THE INDIVIDUAL WHO SIGNED THE DOCUMENT TO WHICH THIS CERTIFICATE IS ATTACHED, AND NOT THE TRUTHFULNESS, ACCURACY, OR VALIDITY OF THAT DOCUMENT.

STATE OF CALIFORNIA
COUNTY OF Alameda } ss.

ON 10/24, 2016, BEFORE ME, Kristin M. Casey, A NOTARY PUBLIC

PERSONALLY APPEARED Dean K. Mills
WHO PROVED TO ME ON THE BASIS OF SATISFACTORY EVIDENCE TO BE THE PERSON(~~S~~) WHOSE NAME(~~S~~) IS/~~ARE~~ SUBSCRIBED TO THE WITHIN INSTRUMENT AND ACKNOWLEDGED TO ME THAT HE/~~SHE/THEY~~ EXECUTED THE SAME IN HIS/~~HER/THEIR~~ AUTHORIZED CAPACITY(~~IES~~), AND THAT BY HIS/~~HER/THEIR~~ SIGNATURE(~~S~~) ON THE INSTRUMENT THE PERSON(~~S~~), OR THE ENTITY UPON BEHALF OF WHICH THE PERSON(~~S~~) ACTED, EXECUTED THE INSTRUMENT.

I CERTIFY UNDER PENALTY OF PERJURY UNDER THE LAWS OF THE STATE OF CALIFORNIA THAT THE FOREGOING PARAGRAPH IS TRUE AND CORRECT.

WITNESS MY HAND.

NOTARY'S SIGNATURE: Kristin M. Casey
NAME OF NOTARY (PLEASE PRINT): Kristin M. Casey
PRINCIPAL COUNTY OF BUSINESS: Alameda
MY COMMISSION NUMBER: 2124729
MY COMMISSION EXPIRES: Aug. 24, 2019

23488582
Regina Alcomendras
Santa Clara - Clerk-Recorder
11/04/2016 02:30 PM
CONFORMED COPY
Copy of document recorded.
Has not been compared with original.

OWNER ACKNOWLEDGMENT

A NOTARY PUBLIC OR OTHER OFFICER COMPLETING THIS CERTIFICATE VERIFIES ONLY THE IDENTITY OF THE INDIVIDUAL WHO SIGNED THE DOCUMENT TO WHICH THIS CERTIFICATE IS ATTACHED, AND NOT THE TRUTHFULNESS, ACCURACY, OR VALIDITY OF THAT DOCUMENT.

STATE OF CALIFORNIA
COUNTY OF _____ } ss.

ON _____, 2016, BEFORE ME, _____, A NOTARY PUBLIC

PERSONALLY APPEARED _____
WHO PROVED TO ME ON THE BASIS OF SATISFACTORY EVIDENCE TO BE THE PERSON(S) WHOSE NAME(S) IS/ARE SUBSCRIBED TO THE WITHIN INSTRUMENT AND ACKNOWLEDGED TO ME THAT HE/SHE/THEY EXECUTED THE SAME IN HIS/HER/THEIR AUTHORIZED CAPACITY(IES), AND THAT BY HIS/HER/THEIR SIGNATURE(S) ON THE INSTRUMENT THE PERSON(S), OR THE ENTITY UPON BEHALF OF WHICH THE PERSON(S) ACTED, EXECUTED THE INSTRUMENT.

I CERTIFY UNDER PENALTY OF PERJURY UNDER THE LAWS OF THE STATE OF CALIFORNIA THAT THE FOREGOING PARAGRAPH IS TRUE AND CORRECT.

WITNESS MY HAND.

NOTARY'S SIGNATURE: _____
NAME OF NOTARY (PLEASE PRINT): _____
PRINCIPAL COUNTY OF BUSINESS: _____
MY COMMISSION NUMBER: _____
MY COMMISSION EXPIRES: _____

CITY CLERK'S CERTIFICATE

I, MARY LAVELLE, CITY CLERK OF THE CITY OF MILPITAS, CALIFORNIA, HEREBY CERTIFY THAT SAID CITY COUNCIL OF THE CITY OF MILPITAS, AS GOVERNING BODY OF SAID CITY AT A REGULAR MEETING HELD ON Oct. 18, 20 16, HAS TAKEN THE FOLLOWING ACTIONS:

1. APPROVED THIS FINAL MAP, "TRACT 10363, CENTRE POINTE".
2. ACCEPTED, SUBJECT TO IMPROVEMENT, ON BEHALF OF THE PUBLIC THE EASEMENTS DEDICATED FOR PUBLIC PURPOSES IN CONFORMITY WITH THE TERMS OF THE DEDICATION TO WIT:
   a.) "PARCEL G" AND "PARCEL H" (SHOWN AS "CENTRE POINTE DRIVE").
   b.) EASEMENTS FOR EMERGENCY VEHICLE ACCESS PURPOSES (EAE).
   c.) EASEMENT FOR PUBLIC SERVICE, UTILITY AND SIDEWALK EASEMENT PURPOSES (PSUSE).
   d.) EASEMENTS FOR FUTURE BRIDGE IMPROVEMENTS AND PUBLIC ACCESS PURPOSES (BAE).
   e.) EASEMENTS FOR SURFACE DRAINAGE RELEASE OF STORM WATER (SDRE).
3. FOR ASSESSMENT DISTRICTS CREATED BY THIS GOVERNING BODY, THE COUNCIL HAS DETERMINED THAT PROVISIONS HAVE BEEN MADE FOR SEGREGATION OF THE RESPONSIBILITY OF EACH OF THE PROPOSED NEW PARCELS FOR A PORTION OF THE ASSESSMENT PAYMENT OBLIGATION IN THE MANNER PROVIDED IN THE STATUTE PURSUANT TO THE WHICH THE ASSESSMENTS WERE LEVIED: COMMUNITY FACILITIES DISTRICT 2005-1 AND 2013-1.
4. PURSUANT TO SECTION 66424(g) AND 66499.20.2 OF THE SUBDIVISION MAP ACT, THE FILING OF THIS MAP SHALL CONSTITUTE ABANDONMENT OF THE FOLLOWING:
   a.) THE PORTION OF CENTRE POINTE AVENUE AS SHOWN ON THE PARCEL MAP FILED SEPTEMBER 15, 1983, IN BOOK 517 OF MAPS, AT PAGES 42 AND 43, RECORDS OF SANTA CLARA COUNTY, CALIFORNIA, CONTAINED WITHIN THE DISTINCTIVE SYMBOL LINE SHOWN HEREON.
   b.) THE PORTION OF THE PUBLIC SERVICE AND UTILITY EASEMENT (PSUE) AS SHOWN ON THE PARCEL MAP FILED SEPTEMBER 15, 1983, IN BOOK 517 OF MAPS, AT PAGES 42 AND 43, RECORDS OF SANTA CLARA COUNTY, CALIFORNIA, CONTAINED WITHIN THE DISTINCTIVE SYMBOL LINE SHOWN HEREON.

THE ABANDONMENTS DESCRIBED ABOVE ARE THEREFORE NOT SHOWN ON THIS MAP. ALL OTHER PUBLIC STREETS AND EASEMENTS NOT SPECIFICALLY LISTED HEREON FOR ABANDONMENT ARE RETAINED FOR PUBLIC USE.

DATED: 10/31/16

Mary Lavelle
MARY LAVELLE
CITY CLERK, CITY OF MILPITAS

BK 898 / PG 40-46

RECORDER'S CERTIFICATE

FILE NO. 23488582 FEE $ 20.00 PAID. ACCEPTED FOR RECORD AND FILED IN BOOK 898 OF MAPS AT PAGES 40 - 46, SANTA CLARA COUNTY RECORDS, THIS 4th DAY OF November, 2016 AT 2:30 pM., AT THE REQUEST OF FIRST AMERICAN TITLE COMPANY.

REGINA ALCOMENDRAS, RECORDER
SANTA CLARA COUNTY, CALIFORNIA

BY VANESSA ORTIZ
DEPUTY

TRACT 10363
CENTRE POINTE

SUBDIVISION FOR CONDOMINIUM PURPOSES

SANTA CLARA COUNTY, CALIFORNIA
CITY OF MILPITAS

BEING A SUBDIVISION OF PARCEL 1 AND A PORTION OF CENTRE POINTE DRIVE AS SHOWN ON THE PARCEL MAP, FILED SEPTEMBER 15, 1983 IN BOOK 517 OF MAPS, PAGES 42 AND 43, RECORDS OF SANTA CLARA COUNTY, CALIFORNIA; AND ADJUSTED PARCEL 2 AND ADJUSTED PARCEL 3 AS SHOWN ON THE CERTIFICATE OF COMPLIANCE FOR LOT LINE ADJUSTMENT NO. L.L.A. 2015-005, RECORDED NOVEMBER 20, 2015 AS DOCUMENT #23152657, OFFICIAL RECORDS OF SANTA CLARA COUNTY, CALIFORNIA

Prepared By:
RUGGERI-JENSEN-AZAR
8055 Camino Arroyo, Gilroy, CA 95020
OCTOBER 2016

JOB #122015 SHEET 1 OF 7 SHEETS

23488582

SURVEYOR'S STATEMENT

THIS MAP WAS PREPARED BY ME OR UNDER MY DIRECTION AT THE REQUEST OF D.R. HORTON CA3, INC., A DELAWARE CORPORATION, AND IS BASED ON FIELD SURVEY PREFORMED IN MARCH 2016 IN CONFORMANCE WITH THE REQUIREMENTS OF THE SUBDIVISION MAP ACT AND THE CITY OF MILPITAS ORDINANCE AND PROCEDURES, IT IS TRUE AND COMPLETE AS SHOWN. I HEREBY STATE THAT ALL THE MONUMENTS ARE OF THE CHARACTER AND OCCUPY THE POSITIONS INDICATED OR THAT THEY WILL BE SET IN THOSE POSITIONS BEFORE OCTOBER 2018, AND THAT THE MONUMENTS ARE, OR WILL BE, SUFFICIENT TO ENABLE THE SURVEY TO BE RETRACED, AND THAT THIS FINAL MAP SUBSTANTIALLY CONFORMS TO THE CONDITIONALLY APPROVED TENTATIVE MAP.

SIGNED: 10/21/2016
BRYAN PIERCE, PLS 8859 — DATE
EXPIRES: 12-31-2017

PROFESSIONAL LAND SURVEYOR — BRYAN PIERCE No. 8859 — STATE OF CALIFORNIA

CITY SURVEYOR'S STATEMENT

I HEREBY STATE THAT I HAVE EXAMINED THIS MAP AND THAT I AM SATISFIED THAT SAID MAP IS TECHNICALLY CORRECT.

SIGNED: 10/28/2016
LORI MAY WEIS — DATE
ACTING CITY SURVEYOR, CITY OF MILPITAS
MOTT McDONALD
P.L.S. NO. 8803
EXPIRES: 12-31-2016

PROFESSIONAL LAND SURVEYOR — LORI MAY WEIS No. 8803 — STATE OF CALIFORNIA

CITY ENGINEER'S STATEMENT

I HEREBY STATE THAT I HAVE EXAMINED THIS MAP; THAT THE SUBDIVISION AS SHOWN THEREIN IS SUBSTANTIALLY THE SAME AS IT APPEARED ON THE TENTATIVE MAP AND ANY APPROVED ALTERATIONS THEREOF; AND THAT THIS SUBDIVISION COMPLIES WITH PROVISIONS OF THE SUBDIVISION MAP ACT AND LOCAL ORDINANCES, APPLICABLE AT THE TIME OF APPROVAL OF THE TENTATIVE MAP.

SIGNED: 10/28/2016
GREGORY KYU DONG CHUNG, P.E. — DATE
CITY ENGINEER, CITY OF MILPITAS
R.C.E. NO. 58710
EXPIRES: 12-31-2016

REGISTERED PROFESSIONAL ENGINEER — GREGORY KYU DONG CHUNG — NO. C58710 Exp. 12/31/16 — CIVIL — STATE OF CALIFORNIA

SOILS REPORT

A GEOTECHNICAL REPORT WAS PREPARED FOR THIS PROPERTY BY ENGEO INC, ENTITLED "GEOTECHNICAL EXPLORATION", PROJECT NO. 7867.001.000, DATED DECEMBER 30, 2015, SIGNED BY THEODORE P. HAYHAM, CEG, GE 2480, AND FILED WITH THE CITY OF MILPITAS.

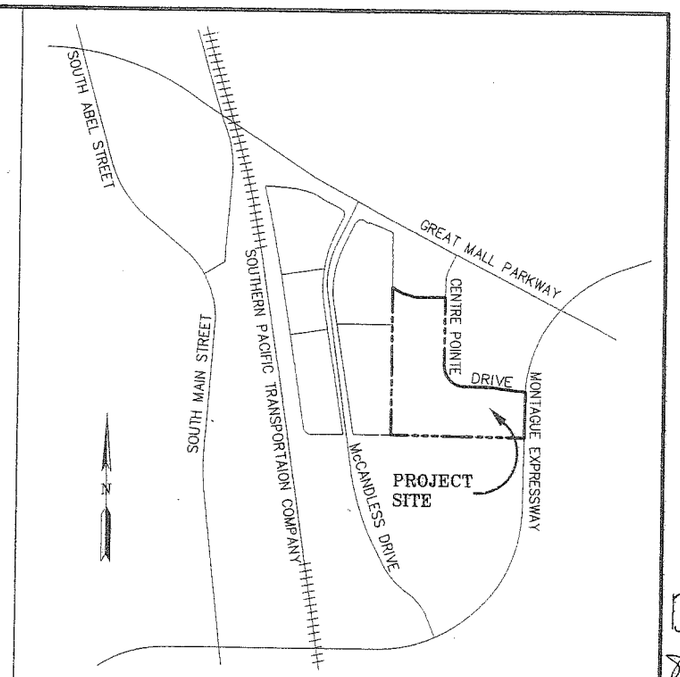

VICINITY MAP
NO SCALE

BK 898 / PG 41-46

TRACT 10363
CENTRE POINTE

SUBDIVISION FOR CONDOMINIUM PURPOSES

SANTA CLARA COUNTY, CALIFORNIA
CITY OF MILPITAS

BEING A SUBDIVISION OF PARCEL 1 AND A PORTION OF CENTRE POINTE DRIVE AS SHOWN ON THE PARCEL MAP, FILED SEPTEMBER 15, 1983 IN BOOK 517 OF MAPS, PAGES 42 AND 43, RECORDS OF SANTA CLARA COUNTY, CALIFORNIA; AND ADJUSTED PARCEL 2 AND ADJUSTED PARCEL 3 AS SHOWN ON THE CERTIFICATE OF COMPLIANCE FOR LOT LINE ADJUSTMENT NO. L.L.A. 2015-005, RECORDED NOVEMBER 20, 2015 AS DOCUMENT #23152657, OFFICIAL RECORDS OF SANTA CLARA COUNTY, CALIFORNIA

Prepared By:
RUGGERI-JENSEN-AZAR
8055 Camino Arroyo, Gilroy, CA 95020
OCTOBER 2016

JOB #122015 — SHEET 2 OF 7 SHEETS

LINE TABLE			
LINE	BEARING	DIST	
L1	N83°43'20"W	78.02'	(S84°29'13"E)(R1)
L2	N71°12'59"W	38.77'	(R2)
L3	N69°30'34"W	50.35'	(R2)
L4	N83°43'20"W	120.17'	(R2)
L5	N83°43'20"W	78.02'	(S84°29'13"E)(R1)
L6	N31°51'06"E	51.86'	(R2)(N31°05'13"E)(R1)
L7	N06°16'52"E	46.56'	(S05°30'47"W)(R1)
L8	N77°38'21"W	146.34'	(N78°24'14"W)(R1)
L9	N06°16'40"E	60.84'	
L10	N05°07'50"E	99.82'	
L11	N06°16'40"E	54.65'	(54.00')(R2)

LEGEND

- BOUNDARY LINE (DISTINCTIVE SYMBOL LINE)
- EXISTING LOT LINE
- NEW LOT LINE
- MONUMENT LINE/CENTER LINE
- EXISTING EASEMENT LINE
- NEW EASEMENT LINE
- TIE LINES ARE 90° OR RADIAL UNLESS OTHERWISE NOTED
- ABUTTER'S RIGHTS RELINQUISHED
- SET STANDARD CITY MONUMENT STAMPED 8859
- FOUND STANDARD CITY MONUMENT IN WELL, AS NOTED
- (M–ML) MONUMENT TO MONUMENT LINE
- (M–M) MONUMENT TO MONUMENT
- (T) TOTAL DIMENSION
- ( ) RECORD DATA
- (R) RADIAL BEARING
- (C) CALCULATED DIMENSION DERIVED FROM RECORDED DATA AS NOTED
- DOC DOCUMENT
- PSUSE PUBLIC SERVICE, UTILITY AND SIDEWALK EASEMENT
- PRUE PRIVATE SERVICE AND UTILITY EASEMENT
- EAE EMERGENCY VEHICLE ACCESS EASEMENT
- SDRE SURFACE DRAINAGE RELEASE EASEMENT
- BAE BRIDGE AND ACCESS EASEMENT
- * EASEMENT TO BE QUITCLAIMED BY SEPARATE INSTRUMENT

KEY MAP
NO SCALE

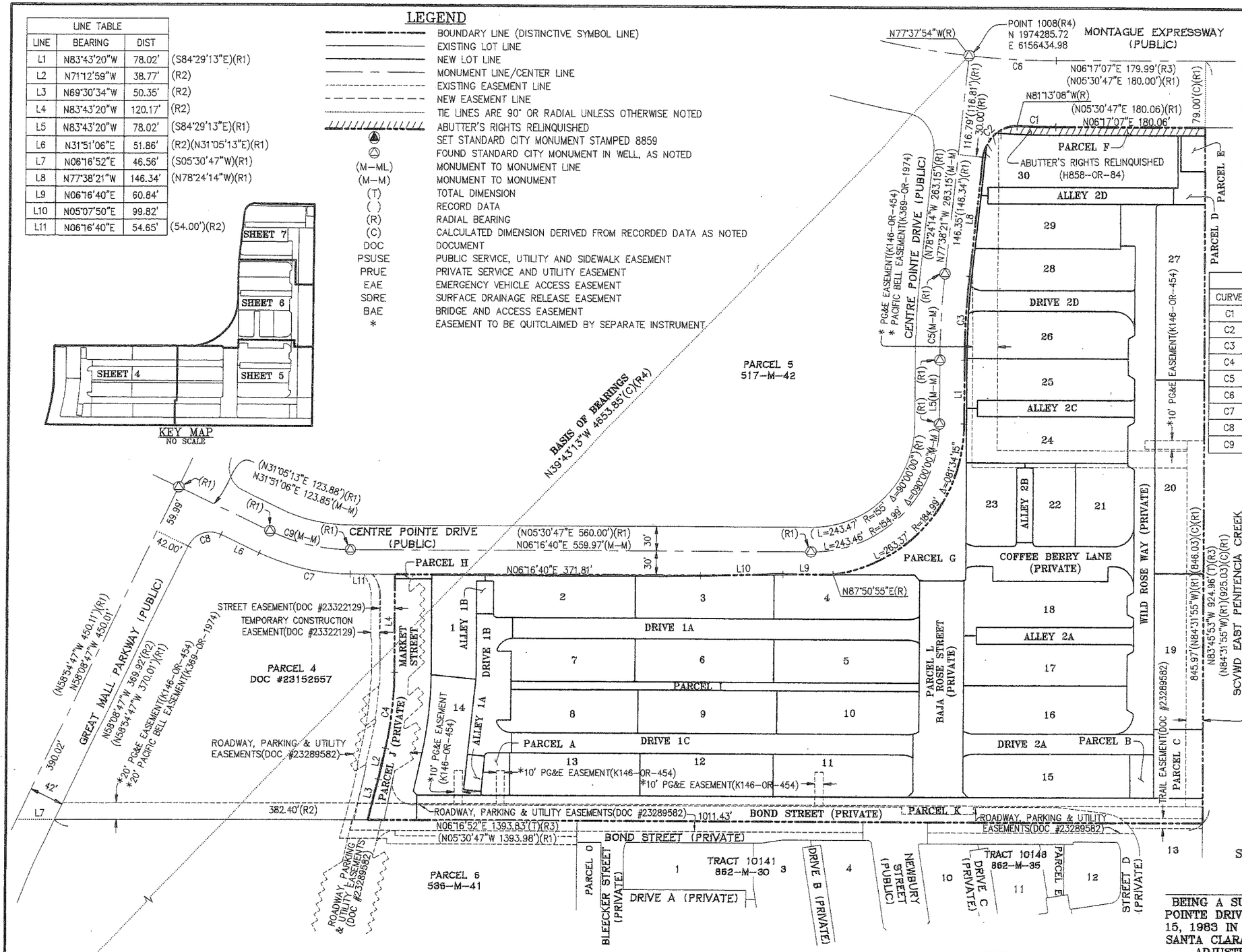

BASIS OF BEARINGS:

THE CALCULATED GRID BEARING OF N39°43'13"W OF THE LINE BETWEEN THE FOUND MONUMENT AT THE INTERSECTION OF MONTAGUE EXPRESSWAY WITH CENTRE POINTE DRIVE AND THE FOUND MONUMENT AT THE INTERSECTION OF SOUTH ABEL STREET WITH WEST CURTIS AVENUE WAS USED FOR THE BASIS OF BEARINGS. THESE MONUMENTS ARE SHOWN AS POINT NUMBERS "1008" AND "1011" ON THAT RECORD OF SURVEY FILED JUNE 26, 1996 IN BOOK 678 OF MAPS, AT PAGES 10 THROUGH 13, RECORDS OF SANTA CLARA COUNTY, CALIFORNIA. THE BEARING WAS CALCULATED FROM THE COORDINATE VALUES FROM EPOCH 1986 SHOWN ON SHEET 4 OF 4 OF THAT SURVEY.

THE VALUES OF POINTS "1008" AND "1011" ARE AS FOLLOWS:

	NORTHING	EASTING
"1008"	1974285.72	6156434.98
"1011"	1977865.34	6153460.98

CURVE TABLE				
CURVE	LENGTH	RADIUS	DELTA	
C1	47.00'	1078.94'	2°29'45"	(L=47.02' R=1079' Δ=02°29'48")(R1)
C2	60.33'	40.00'	86°25'12"	(L=60.32' R=40' Δ=86°24'48")(R1)
C3	102.98'	969.95'	6°04'59"	(L=102.98' R=970' Δ=06°04'59")(R1)
C4	93.86'	430.00'	12°30'21"	(R2)
C5	106.16'	999.95'	6°04'59"	(L=106.17' R=1000' Δ=06°04'59")(R1)
C6	106.17'	999.95'	6°04'59"	(L=106.17' R=1000' Δ=06°04'59")(R1)(R3)
C7	116.04'	259.99'	25°34'26"	(R2) (L=106.17' R=260' Δ=25°34'26")(R1)
C8	47.12'	30.00'	89°59'53"	(R2) (L=47.12' R=30' Δ=90°00'00")(R1)
C9	102.65'	229.99'	25°34'26"	(L=102.66' R=230' Δ=25°34'26")(R1)

NOTES:

1. ALL MONUMENT TIES ARE 90° OR RADIAL TO MONUMENT LINES UNLESS OTHERWISE NOTED.
2. DISTANCES AND DIMENSIONS ARE SHOWN IN FEET AND DECIMALS THEREOF.
3. COORDINATES, BEARINGS AND DISTANCES SHOWN ARE ON THE CALIFORNIA COORDINATE SYSTEM OF 1983 ZONE 3. MULTIPLY DISTANCES SHOWN BY 1.00005500 TO OBTAIN GROUND LEVEL DISTANCES.
4. MONUMENTS TO BE SET ARE SHOWN ON SHEETS 4 THROUGH 6.
5. TOTAL AREA WITHIN DISTINCTIVE SYMBOL LINE IS 10.532 AC±.
6. DUE TO ROUNDING THE SUM OF THE INDIVIDUAL DIMENSIONS MAY NOT EQUAL THE OVERALL DIMENSION.
7. THE EASEMENTS FOR "ROADWAY", "EXCLUSIVE PARKING AREAS" AND "UTILITIES" DESCRIBED IN THE AMENDED AND RESTATED RECIPROCAL STREET EASEMENT AGREEMENT RECORDED APRIL 28, 2016 AS DOCUMENT #23289582, OFFICIAL RECORDS OF SANTA CLARA COUNTY, CALIFORNIA, ARE NOT SEPARATELY DEFINED WITHIN THE STREET EASEMENT AREA.

REFERENCES:

(R1)	PARCEL MAP	–	517–M–42
(R2)	CERTIFICATE OF COMPLIANCE	–	DOCUMENT #23152657
(R3)	TRACT 10148	–	862–M–35
(R4)	RECORD OF SURVEY	–	678–M–10

0 80 160 240
SCALE IN FEET: 1"= 80'

TRACT 10363
CENTRE POINTE

SUBDIVISION FOR CONDOMINIUM PURPOSES

SANTA CLARA COUNTY, CALIFORNIA
CITY OF MILPITAS

BEING A SUBDIVISION OF PARCEL 1 AND A PORTION OF CENTRE POINTE DRIVE AS SHOWN ON THE PARCEL MAP, FILED SEPTEMBER 15, 1983 IN BOOK 517 OF MAPS, PAGES 42 AND 43, RECORDS OF SANTA CLARA COUNTY, CALIFORNIA; AND ADJUSTED PARCEL 2 AND ADJUSTED PARCEL 3 AS SHOWN ON THE CERTIFICATE OF COMPLIANCE FOR LOT LINE ADJUSTMENT NO. L.L.A. 2015–005, RECORDED NOVEMBER 20, 2015 AS DOCUMENT #23152657, OFFICIAL RECORDS OF SANTA CLARA COUNTY, CALIFORNIA

Prepared By:
RUGGERI–JENSEN–AZAR
8055 Camino Arroyo, Gilroy, CA 95020
OCTOBER 2016

JOB #122015

SHEET 3 OF 7 SHEETS

BK 898 PG 42-46

BASIS OF BEARINGS:

THE CALCULATED GRID BEARING OF N39°43'13"W OF THE LINE BETWEEN THE FOUND MONUMENT AT THE INTERSECTION OF MONTAGUE EXPRESSWAY WITH CENTRE POINTE DRIVE AND THE FOUND MONUMENT AT THE INTERSECTION OF SOUTH ABEL STREET WITH WEST, CURTIS AVENUE WAS USED FOR THE BASIS OF BEARINGS. THESE MONUMENTS ARE SHOWN AS POINT NUMBERS "1008" AND "1011" ON THAT RECORD OF SURVEY FILED JUNE 26, 1996 IN BOOK 678 OF MAPS, AT PAGES 10 THROUGH 13, RECORDS OF SANTA CLARA COUNTY, CALIFORNIA. THE BEARING WAS CALCULATED FROM THE COORDINATE VALUES FROM EPOCH 1986 SHOWN ON SHEET 4 OF 4 OF THAT SURVEY.

THE VALUES OF POINTS "1008" AND "1011" ARE AS FOLLOWS:

	NORTHING	EASTING
"1008"	1974285.72	6156434.98
"1011"	1977865.34	6153460.98

REFERENCES:

(R1) PARCEL MAP – 517-M-42
(R2) CERTIFICATE OF COMPLIANCE – DOCUMENT #23152657
(R3) TRACT 10148 – 862-M-35
(R4) RECORD OF SURVEY – 678-M-10

LINE TABLE			
LINE	BEARING	DIST	
L1	N06°16'52"E	15.79'	
L2	N06°16'52"E	15.78'	
L3	N83°43'08"W	7.00'	
L4	N06°16'41"E	21.00'	
L5	N06°16'52"E	21.00'	(R)
L6	N83°43'27"W	4.50'	
L7	N06°16'52"E	10.50'	
L8	N06°16'52"E	10.50'	
L9	N06°16'41"E	10.50'	
L10	N06°16'41"E	10.50'	
L11	N12°02'03"E	21.00'	(R)
L12	N12°02'03"E	21.00'	
L13	N12°02'03"E	10.50'	
L14	N12°02'03"E	10.50'	
L15	N83°43'08"W	4.55'	
L16	N57°31'57"E	6.40'	
L17	N83°43'08"W	25.00'	
L18	N83°43'08"W	25.00'	(R)
L19	N71°12'59"W	38.77'	
L20	N69°30'34"W	50.35'	
L21	N06°16'52"E	5.22'	
L22	N06°16'52"E	45.49'	
L23	N12°02'03"E	49.34'	
L24	N12°02'03"E	45.50'	
L25	N83°43'20"W	30.00'	

CURVE TABLE			
CURVE	LENGTH	RADIUS	DELTA
C1	25.12'	19.50'	73°47'52"
C2	2.78'	1.50'	106°12'08"
C3	2.78'	1.50'	106°11'47"
C4	25.12'	19.50'	73°48'13"
C5	6.48'	64.50'	5°45'11"
C6	7.07'	4.50'	90°00'00"
C7	6.62'	4.50'	84°14'49"
C8	2.92'	474.80'	0°21'07"
C9	7.53'	75.00'	5°45'11"
C10	1.53'	64.50'	1°21'17"
C11	4.95'	64.50'	4°23'54"

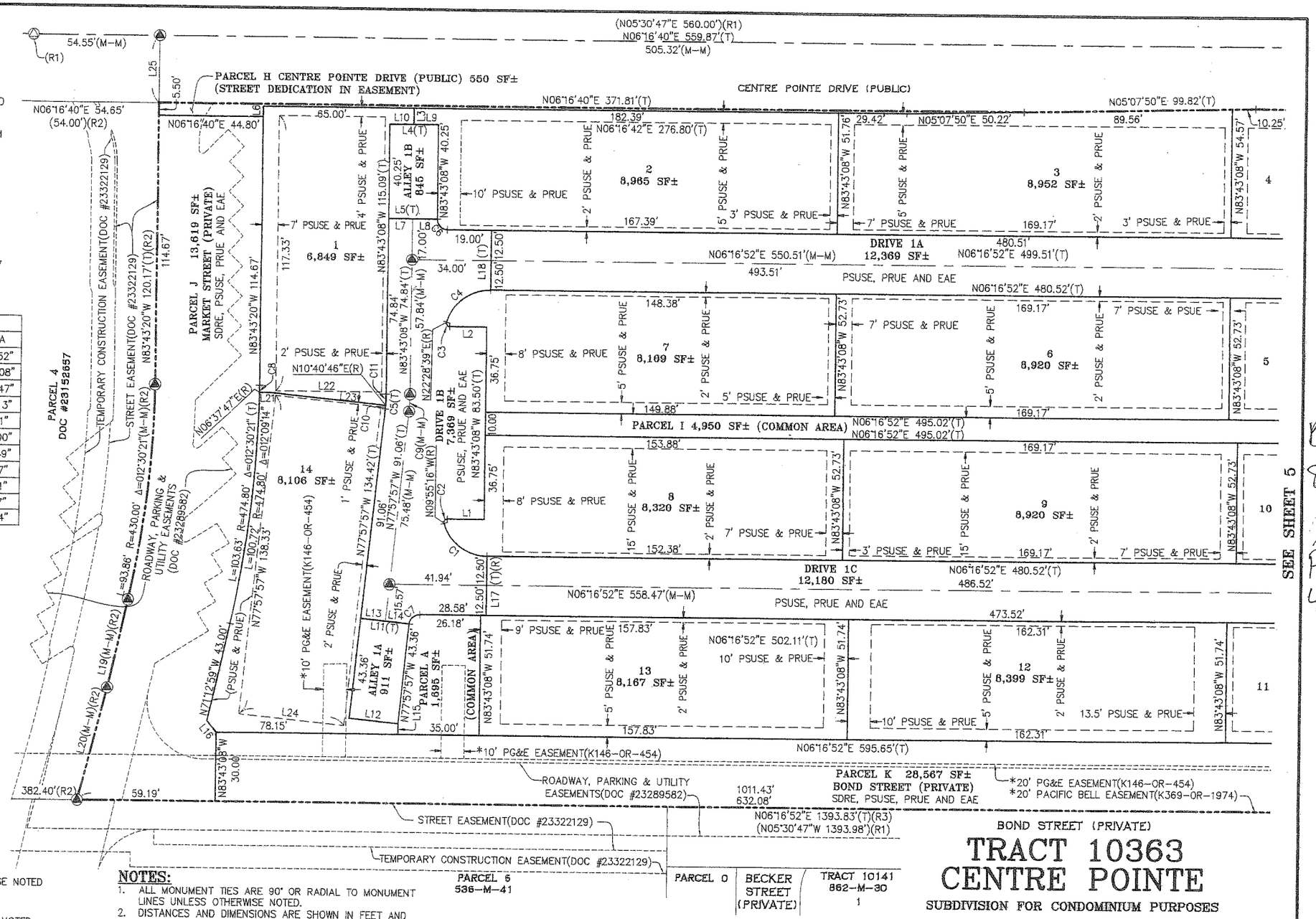

LEGEND

	BOUNDARY LINE (DISTINCTIVE SYMBOL LINE)
	EXISTING LOT LINE
	NEW LOT LINE
	MONUMENT LINE/CENTER LINE
	EXISTING EASEMENT LINE
	NEW EASEMENT LINE
	TIE LINES ARE 90° OR RADIAL UNLESS OTHERWISE NOTED
	ABUTTER'S RIGHTS RELINQUISHED
	SET STANDARD CITY MONUMENT STAMPED 8859
	FOUND STANDARD CITY MONUMENT IN WELL, AS NOTED
(M-ML)	MONUMENT TO MONUMENT LINE
(M-M)	MONUMENT TO MONUMENT
(T)	TOTAL DIMENSION
( )	RECORD DATA
(R)	RADIAL BEARING
(C)	CALCULATED DIMENSION DERIVED FROM RECORDED DATA AS NOTED
DOC	DOCUMENT
PSUSE	PUBLIC SERVICE, UTILITY AND SIDEWALK EASEMENT
PRUE	PRIVATE SERVICE AND UTILITY EASEMENT
EAE	EMERGENCY VEHICLE ACCESS EASEMENT
SDRE	SURFACE DRAINAGE RELEASE EASEMENT
BAE	BRIDGE AND ACCESS EASEMENT
*	EASEMENT TO BE QUITCLAIMED BY SEPARATE INSTRUMENT

NOTES:

1. ALL MONUMENT TIES ARE 90° OR RADIAL TO MONUMENT LINES UNLESS OTHERWISE NOTED.
2. DISTANCES AND DIMENSIONS ARE SHOWN IN FEET AND DECIMALS THEREOF.
3. COORDINATES, BEARINGS AND DISTANCES SHOWN ARE ON THE CALIFORNIA COORDINATE SYSTEM OF 1983 ZONE 3. MULTIPLY DISTANCES SHOWN BY 1.00005500 TO OBTAIN GROUND LEVEL DISTANCES.
4. MONUMENTS TO BE SET ARE SHOWN ON SHEETS 4 THROUGH 6.
5. TOTAL AREA WITHIN DISTINCTIVE SYMBOL LINE IS 10.532 AC±.
6. DUE TO ROUNDING THE SUM OF THE INDIVIDUAL DIMENSIONS MAY NOT EQUAL THE OVERALL DIMENSION.
7. THE EASEMENTS FOR "ROADWAY", "EXCLUSIVE PARKING AREAS" AND "UTILITIES" DESCRIBED IN THE AMENDED AND RESTATED RECIPROCAL STREET EASEMENT AGREEMENT RECORDED APRIL 28, 2016 AS DOCUMENT #23289582, OFFICIAL RECORDS OF SANTA CLARA COUNTY, CALIFORNIA, ARE NOT SEPARATELY DEFINED WITHIN THE STREET EASEMENT AREA.

0 30 60 90
SCALE IN FEET: 1"= 30'

BOND STREET (PRIVATE)

TRACT 10363
CENTRE POINTE

SUBDIVISION FOR CONDOMINIUM PURPOSES

SANTA CLARA COUNTY, CALIFORNIA
CITY OF MILPITAS

BEING A SUBDIVISION OF PARCEL 1 AND A PORTION OF CENTRE POINTE DRIVE AS SHOWN ON THE PARCEL MAP, FILED SEPTEMBER 15, 1983 IN BOOK 517 OF MAPS, PAGES 42 AND 43, RECORDS OF SANTA CLARA COUNTY, CALIFORNIA; AND ADJUSTED PARCEL 2 AND ADJUSTED PARCEL 3 AS SHOWN ON THE CERTIFICATE OF COMPLIANCE FOR LOT LINE ADJUSTMENT NO. L.L.A. 2015-005, RECORDED NOVEMBER 20, 2015 AS DOCUMENT #23152657, OFFICIAL RECORDS OF SANTA CLARA COUNTY, CALIFORNIA

Prepared By:
RUGGERI-JENSEN-AZAR
8055 Camino Arroyo, Gilroy, CA 95020
OCTOBER 2016

JOB #122015

SHEET 4 OF 7 SHEETS

BK 898 PG 43-46

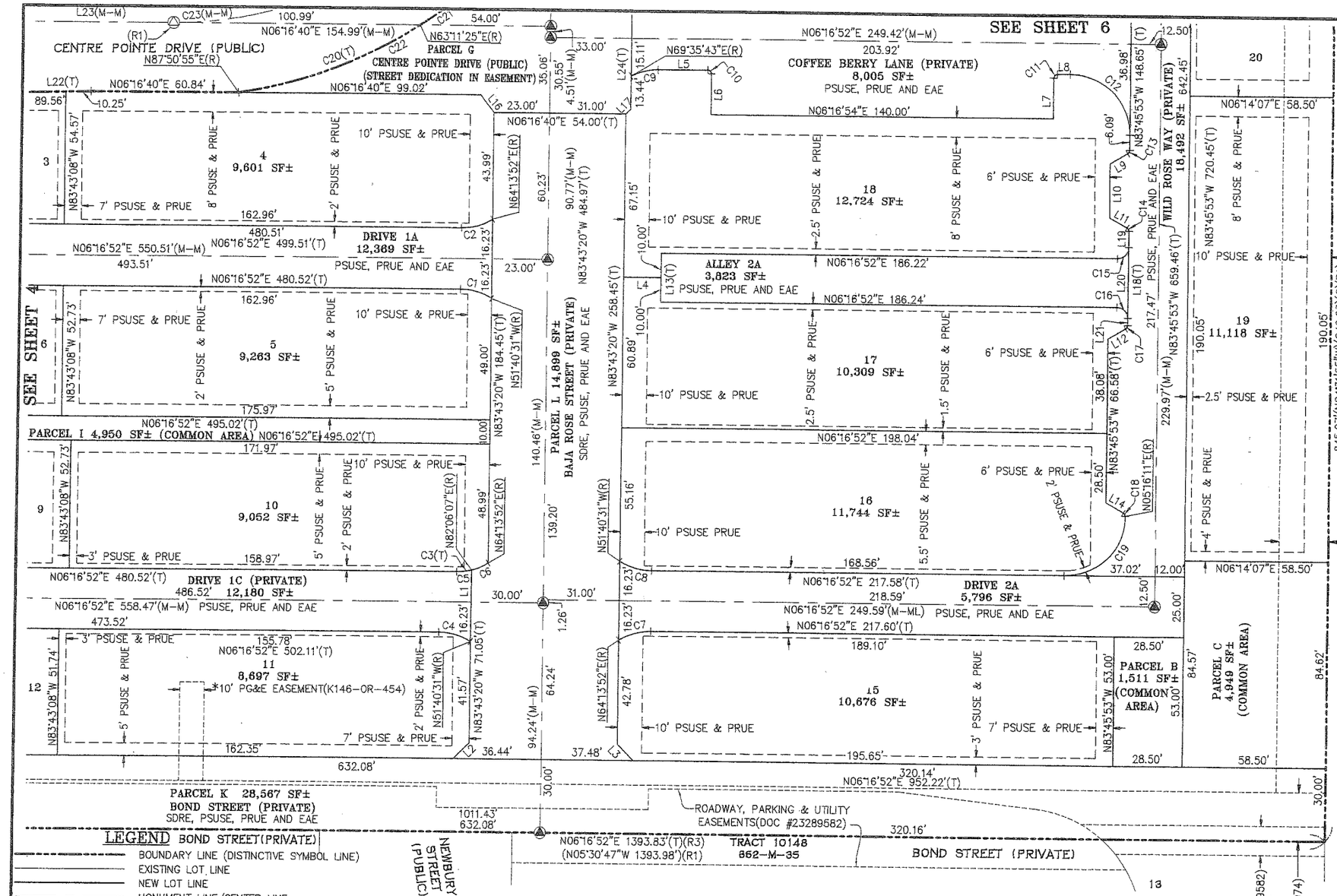

BASIS OF BEARINGS:

THE CALCULATED GRID BEARING OF N39°43'13"W OF THE LINE BETWEEN THE FOUND MONUMENT AT THE INTERSECTION OF MONTAGUE EXPRESSWAY WITH CENTRE POINTE DRIVE AND THE FOUND MONUMENT AT THE INTERSECTION OF SOUTH ABEL STREET WITH WEST CURTIS AVENUE WAS USED FOR THE BASIS OF BEARINGS. THESE MONUMENTS ARE SHOWN AS POINT NUMBERS "1008" AND "1011" ON THAT RECORD OF SURVEY FILED JUNE 26, 1996 IN BOOK 678 OF MAPS, AT PAGES 10 THROUGH 13, RECORDS OF SANTA CLARA COUNTY, CALIFORNIA. THE BEARING WAS CALCULATED FROM THE COORDINATE VALUES FROM EPOCH 1986 SHOWN ON SHEET 4 OF 4 OF THAT SURVEY.

THE VALUES OF POINTS "1008" AND "1011" ARE AS FOLLOWS:

	NORTHING	EASTING
"1008"	1974285.72	6156434.98
"1011"	1977865.34	6153460.98

0 30 60 90

SCALE IN FEET: 1"= 30'

LINE TABLE		
LINE	BEARING	DIST
L1	N83°43'20"W	13.25'
L2	N38°43'14"W	9.10'
L3	N51°16'46"E	9.17'
L4	N06°16'40"E	15.26'
L5	N06°16'52"E	20.20'
L6	N83°43'08"W	16.50'
L7	N83°43'08"W	16.50'
L8	N06°16'52"E	5.25'
L9	N23°43'08"W	8.37'
L10	N83°45'53"W	22.58'
L11	N36°11'15"E	8.37'
L12	N23°43'08"W	8.37'
L13	N83°43'08"W	20.00'
L14	N36°16'52"E	8.37'
L15	N83°43'08"W	4.55'
L16	N56°35'25"E	9.17'
L17	N38°43'14"W	2.83'
L18	N83°45'53"W	38.42'
L19	N83°45'53"W	6.59'
L20	N83°45'53"W	29.00'
L21	N83°45'53"W	2.83'
L22	N05°07'50"E	99.82'
L23	N06°16'40"E	559.87'
L24	N83°43'20"W	266.06'

BK 898 PG 44-46

REFERENCES:

(R1) PARCEL MAP – 517-M-42
(R2) CERTIFICATE OF COMPLIANCE – DOCUMENT #23152657
(R3) TRACT 10148 – 862-M-35
(R4) RECORD OF SURVEY – 678-M-10

LEGEND

- BOUNDARY LINE (DISTINCTIVE SYMBOL LINE)
- EXISTING LOT LINE
- NEW LOT LINE
- MONUMENT LINE/CENTER LINE
- EXISTING EASEMENT LINE
- NEW EASEMENT LINE
- TIE LINES ARE 90° OR RADIAL UNLESS OTHERWISE NOTED
- ABUTTER'S RIGHTS RELINQUISHED
- SET STANDARD CITY MONUMENT STAMPED 8659
- FOUND STANDARD CITY MONUMENT IN WELL, AS NOTED
- (M-ML) MONUMENT TO MONUMENT LINE
- (M-M) MONUMENT TO MONUMENT
- (T) TOTAL DIMENSION
- ( ) RECORD DATA
- (R) RADIAL BEARING
- (C) CALCULATED DIMENSION DERIVED FROM RECORDED DATA AS NOTED
- DOC DOCUMENT
- PSUSE PUBLIC SERVICE, UTILITY AND SIDEWALK EASEMENT
- PRUE PRIVATE SERVICE AND UTILITY EASEMENT
- EAE EMERGENCY VEHICLE ACCESS EASEMENT
- SDRE SURFACE DRAINAGE RELEASE EASEMENT
- BAE BRIDGE AND ACCESS EASEMENT
- * EASEMENT TO BE QUITCLAIMED BY SEPARATE INSTRUMENT

NOTES:

1. ALL MONUMENT TIES ARE 90° OR RADIAL TO MONUMENT LINES UNLESS OTHERWISE NOTED.
2. DISTANCES AND DIMENSIONS ARE SHOWN IN FEET AND DECIMALS THEREOF.
3. COORDINATES, BEARINGS AND DISTANCES SHOWN ARE ON THE CALIFORNIA COORDINATE SYSTEM OF 1983 ZONE 3. MULTIPLY DISTANCES SHOWN BY 1.00005500 TO OBTAIN GROUND LEVEL DISTANCES.
4. MONUMENTS TO BE SET ARE SHOWN ON SHEETS 4 THROUGH 6.
5. TOTAL AREA WITHIN DISTINCTIVE SYMBOL LINE IS 10.532 AC±.
6. DUE TO ROUNDING THE SUM OF THE INDIVIDUAL DIMENSIONS MAY NOT EQUAL THE OVERALL DIMENSION.
7. THE EASEMENTS FOR "ROADWAY", "EXCLUSIVE PARKING AREAS" AND "UTILITIES" DESCRIBED IN THE AMENDED AND RESTATED RECIPROCAL STREET EASEMENT AGREEMENT RECORDED APRIL 28, 2016 AS DOCUMENT #23289582, OFFICIAL RECORDS OF SANTA CLARA COUNTY, CALIFORNIA, ARE NOT SEPARATELY DEFINED WITHIN THE STREET EASEMENT AREA.

CURVE TABLE			
CURVE	LENGTH	RADIUS	DELTA
C1	13.70'	24.50'	32°02'37"
C2	13.70'	24.50'	32°03'01"
C3	13.70'	24.50'	32°03'01"
C4	13.70'	24.50'	32°02'37"
C5	6.06'	24.50'	14°10'45"
C6	7.64'	24.50'	17°52'16"
C7	13.70'	24.50'	32°03'01"
C8	13.70'	24.50'	32°02'37"
C9	11.41'	24.50'	26°41'09"
C10	2.36'	1.50'	90°00'00"
C11	2.36'	1.50'	90°00'00"
C12	38.46'	24.50'	89°57'15"

CURVE TABLE			
CURVE	LENGTH	RADIUS	DELTA
C13	1.57'	1.50'	60°02'45"
C14	1.57'	1.50'	60°02'51"
C15	7.07'	4.50'	90°02'45"
C16	7.06'	4.50'	89°57'15"
C17	1.57'	1.50'	60°02'45"
C18	1.54'	1.50'	58°59'19"
C19	38.92'	24.50'	91°00'41"
C20	263.37'	184.99'	81°34'15"
C21	76.92'	184.99'	23°49'30"
C22	79.61'	184.99'	24°39'30"
C23	243.46'	154.99'	90°00'00"

TRACT 10363
CENTRE POINTE

SUBDIVISION FOR CONDOMINIUM PURPOSES

SANTA CLARA COUNTY, CALIFORNIA
CITY OF MILPITAS

BEING A SUBDIVISION OF PARCEL 1 AND A PORTION OF CENTRE POINTE DRIVE AS SHOWN ON THE PARCEL MAP, FILED SEPTEMBER 15, 1983 IN BOOK 517 OF MAPS, PAGES 42 AND 43, RECORDS OF SANTA CLARA COUNTY, CALIFORNIA; AND ADJUSTED PARCEL 2 AND ADJUSTED PARCEL 3 AS SHOWN ON THE CERTIFICATE OF COMPLIANCE FOR LOT LINE ADJUSTMENT NO. L.L.A. 2015-005, RECORDED NOVEMBER 20, 2015 AS DOCUMENT #23152657, OFFICIAL RECORDS OF SANTA CLARA COUNTY, CALIFORNIA

Prepared By:
RUGGERI-JENSEN-AZAR
8055 Camino Arroyo, Gilroy, CA 95020
OCTOBER 2016

JOB #122015

SHEET 5 OF 7 SHEETS

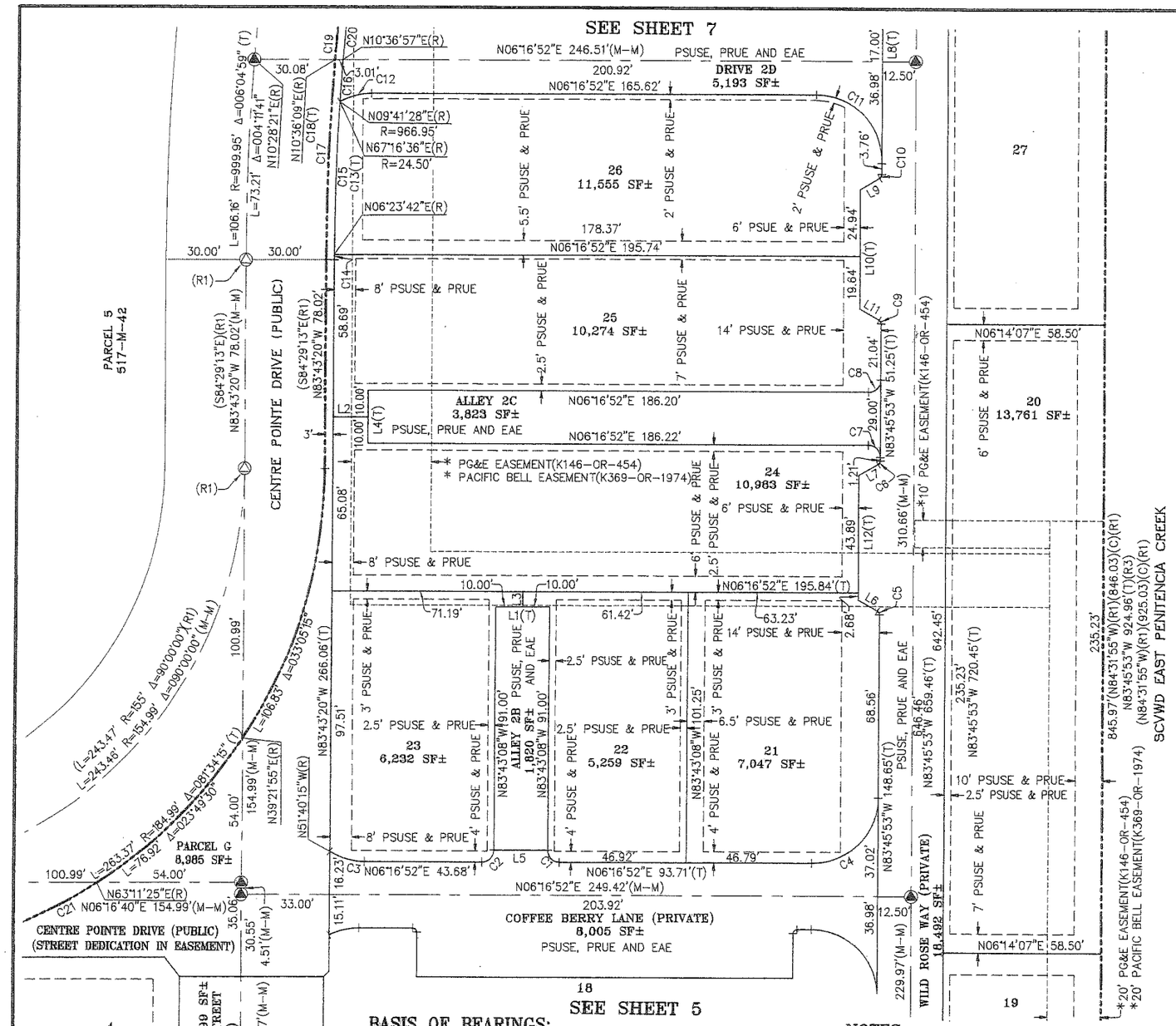

LEGEND

	BOUNDARY LINE (DISTINCTIVE SYMBOL LINE)
	EXISTING LOT LINE
	NEW LOT LINE
	MONUMENT LINE/CENTER LINE
	EXISTING EASEMENT LINE
	NEW EASEMENT LINE
	TIE LINES ARE 90° OR RADIAL UNLESS OTHERWISE NOTED
	ABUTTER'S RIGHTS RELINQUISHED
	SET STANDARD CITY MONUMENT STAMPED 8859
	FOUND STANDARD CITY MONUMENT IN WELL, AS NOTED
(M-ML)	MONUMENT TO MONUMENT LINE
(M-M)	MONUMENT TO MONUMENT
(T)	TOTAL DIMENSION
( )	RECORD DATA
(R)	RADIAL BEARING
(C)	CALCULATED DIMENSION DERIVED FROM RECORDED DATA AS NOTED
DOC	DOCUMENT
PSUSE	PUBLIC SERVICE, UTILITY AND SIDEWALK EASEMENT
PRUE	PRIVATE SERVICE AND UTILITY EASEMENT
EAE	EMERGENCY VEHICLE ACCESS EASEMENT
SDRE	SURFACE DRAINAGE RELEASE EASEMENT
BAE	BRIDGE AND ACCESS EASEMENT
*	EASEMENT TO BE QUITCLAIMED BY SEPARATE INSTRUMENT

REFERENCES:

(R1)	PARCEL MAP	–	517-M-42
(R2)	CERTIFICATE OF COMPLIANCE	–	DOCUMENT #23152657
(R3)	TRACT 10148	–	862-M-35
(R4)	RECORD OF SURVEY	–	678-M-10

LINE TABLE

LINE	BEARING	DIST
L1	N06°16'52"E	20.00'
L2	N06°16'52"E	13.08'
L3	N83°43'08"W	5.75'
L4	N83°43'08"W	20.00'
L5	N06°16'52"E	20.00'
L6	N36°16'52"E	8.38'
L7	N23°43'08"W	8.37'
L8	N83°45'53"W	107.16'
L9	N23°43'08"W	8.37'
L10	N83°45'53"W	44.58'
L11	N36°16'52"E	8.38'
L12	N83°45'53"W	46.57'

CURVE TABLE

CURVE	LENGTH	RADIUS	DELTA
C1	7.07'	4.50'	90°00'00"
C2	7.07'	4.50'	90°00'00"
C3	13.70'	24.50'	32°02'53"
C4	38.50'	24.50'	90°02'45"
C5	1.57'	1.50'	59°57'15"
C6	1.57'	1.50'	60°02'45"
C7	7.06'	4.50'	89°57'15"
C8	7.07'	4.50'	90°02'45"
C9	1.57'	1.50'	59°57'15"
C10	1.57'	1.50'	60°02'45"
C11	38.46'	24.50'	89°57'15"
C12	12.40'	24.50'	29°00'16"
C13	102.66'	966.95'	6°04'59"
C14	1.98'	966.95'	0°07'02"
C15	55.63'	966.95'	3°17'46"
C16	15.61'	966.95'	0°55'30"
C17	73.21'	969.95'	4°19'29"
C18	102.98'	969.95'	6°04'59"
C19	29.77'	969.95'	1°45'30"
C20	17.74'	966.95'	1°03'04"
C21	79.61'	184.99'	24°39'30"

0 30 60 90

SCALE IN FEET: 1"= 30'

TRACT 10363
CENTRE POINTE

SUBDIVISION FOR CONDOMINIUM PURPOSES

SANTA CLARA COUNTY, CALIFORNIA
CITY OF MILPITAS

BEING A SUBDIVISION OF PARCEL 1 AND A PORTION OF CENTRE POINTE DRIVE AS SHOWN ON THE PARCEL MAP, FILED SEPTEMBER 15, 1983 IN BOOK 517 OF MAPS, PAGES 42 AND 43, RECORDS OF SANTA CLARA COUNTY, CALIFORNIA; AND ADJUSTED PARCEL 2 AND ADJUSTED PARCEL 3 AS SHOWN ON THE CERTIFICATE OF COMPLIANCE FOR LOT LINE ADJUSTMENT NO. L.L.A. 2015-005, RECORDED NOVEMBER 20, 2015 AS DOCUMENT #23152657, OFFICIAL RECORDS OF SANTA CLARA COUNTY, CALIFORNIA

Prepared By:
RUGGERI-JENSEN-AZAR
8055 Camino Arroyo, Gilroy, CA 95020
OCTOBER 2016

JOB #122015

SHEET 6 OF 7 SHEETS

BASIS OF BEARINGS:

THE CALCULATED GRID BEARING OF N39°43'13"W OF THE LINE BETWEEN THE FOUND MONUMENT AT THE INTERSECTION OF MONTAGUE EXPRESSWAY WITH CENTRE POINTE DRIVE AND THE FOUND MONUMENT AT THE INTERSECTION OF SOUTH ABEL STREET WITH WEST CURTIS AVENUE WAS USED FOR THE BASIS OF BEARINGS. THESE MONUMENTS ARE SHOWN AS POINT NUMBERS "1008" AND "1011" ON THAT RECORD OF SURVEY FILED JUNE 26, 1996 IN BOOK 678 OF MAPS, AT PAGES 10 THROUGH 13, RECORDS OF SANTA CLARA COUNTY, CALIFORNIA. THE BEARING WAS CALCULATED FROM THE COORDINATE VALUES FROM EPOCH 1986 SHOWN ON SHEET 4 OF 4 OF THAT SURVEY.

THE VALUES OF POINTS "1008" AND "1011" ARE AS FOLLOWS:

	NORTHING	EASTING
"1008"	1974285.72	6156434.98
"1011"	1977865.34	6153460.98

NOTES:

1. ALL MONUMENT TIES ARE 90° OR RADIAL TO MONUMENT LINES UNLESS OTHERWISE NOTED.
2. DISTANCES AND DIMENSIONS ARE SHOWN IN FEET AND DECIMALS THEREOF.
3. COORDINATES, BEARINGS AND DISTANCES SHOWN ARE ON THE CALIFORNIA COORDINATE SYSTEM OF 1983 ZONE 3. MULTIPLY DISTANCES SHOWN BY 1.00005500 TO OBTAIN GROUND LEVEL DISTANCES.
4. MONUMENTS TO BE SET ARE SHOWN ON SHEETS 4 THROUGH 6.
5. TOTAL AREA WITHIN DISTINCTIVE SYMBOL LINE IS 10.532 AC±.
6. DUE TO ROUNDING THE SUM OF THE INDIVIDUAL DIMENSIONS MAY NOT EQUAL THE OVERALL DIMENSION.
7. THE EASEMENTS FOR "ROADWAY", "EXCLUSIVE PARKING AREAS" AND "UTILITIES" DESCRIBED IN THE AMENDED AND RESTATED RECIPROCAL STREET EASEMENT AGREEMENT RECORDED APRIL 28, 2016 AS DOCUMENT #23289582, OFFICIAL RECORDS OF SANTA CLARA COUNTY, CALIFORNIA, ARE NOT SEPARATELY DEFINED WITHIN THE STREET EASEMENT AREA.

BK 898 / PG 45-46

45

BASIS OF BEARINGS:

THE CALCULATED GRID BEARING OF N39°43'13"W OF THE LINE BETWEEN THE FOUND MONUMENT AT THE INTERSECTION OF MONTAGUE EXPRESSWAY WITH CENTRE POINTE DRIVE AND THE FOUND MONUMENT AT THE INTERSECTION OF SOUTH ABEL STREET WITH WEST CURTIS AVENUE WAS USED FOR THE BASIS OF BEARINGS. THESE MONUMENTS ARE SHOWN AS POINT NUMBERS "1008" AND "1011" ON THAT RECORD OF SURVEY FILED JUNE 26, 1996 IN BOOK 678 OF MAPS, AT PAGES 10 THROUGH 13, RECORDS OF SANTA CLARA COUNTY, CALIFORNIA. THE BEARING WAS CALCULATED FROM THE COORDINATE VALUES FROM EPOCH 1986 SHOWN ON SHEET 4 OF 4 OF THAT SURVEY.

THE VALUES OF POINTS "1008" AND "1011" ARE AS FOLLOWS:

	NORTHING	EASTING
"1008"	1974285.72	6156434.98
"1011"	1977865.34	6153460.98

NOTES:

1. ALL MONUMENT TIES ARE 90° OR RADIAL TO MONUMENT LINES UNLESS OTHERWISE NOTED.
2. DISTANCES AND DIMENSIONS ARE SHOWN IN FEET AND DECIMALS THEREOF.
3. COORDINATES, BEARINGS AND DISTANCES SHOWN ARE ON THE CALIFORNIA COORDINATE SYSTEM OF 1983 ZONE 3. MULTIPLY DISTANCES SHOWN BY 1.00005500 TO OBTAIN GROUND LEVEL DISTANCES.
4. MONUMENTS TO BE SET ARE SHOWN ON SHEETS 4 THROUGH 6.
5. TOTAL AREA WITHIN DISTINCTIVE SYMBOL LINE IS 10.532 AC±.
6. DUE TO ROUNDING THE SUM OF THE INDIVIDUAL DIMENSIONS MAY NOT EQUAL THE OVERALL DIMENSION.
7. THE EASEMENTS FOR "ROADWAY", "EXCLUSIVE PARKING AREAS" AND "UTILITIES" DESCRIBED IN THE AMENDED AND RESTATED RECIPROCAL STREET EASEMENT AGREEMENT RECORDED APRIL 28, 2016 AS DOCUMENT #23289582, OFFICIAL RECORDS OF SANTA CLARA COUNTY, CALIFORNIA, ARE NOT SEPARATELY DEFINED WITHIN THE STREET EASEMENT AREA.

LEGEND

	BOUNDARY LINE (DISTINCTIVE SYMBOL LINE)
	EXISTING LOT LINE
	NEW LOT LINE
	MONUMENT LINE/CENTER LINE
	EXISTING EASEMENT LINE
	NEW EASEMENT LINE
	TIE LINES ARE 90° OR RADIAL UNLESS OTHERWISE NOTED
	ABUTTER'S RIGHTS RELINQUISHED
	SET STANDARD CITY MONUMENT STAMPED 8859
	FOUND STANDARD CITY MONUMENT IN WELL, AS NOTED
(M-ML)	MONUMENT TO MONUMENT LINE
(M-M)	MONUMENT TO MONUMENT
(T)	TOTAL DIMENSION
( )	RECORD DATA
(R)	RADIAL BEARING
(C)	CALCULATED DIMENSION DERIVED FROM RECORDED DATA AS NOTED
DOC	DOCUMENT
PSUSE	PUBLIC SERVICE, UTILITY AND SIDEWALK EASEMENT
PRUE	PRIVATE SERVICE AND UTILITY EASEMENT
EAE	EMERGENCY VEHICLE ACCESS EASEMENT
SDRE	SURFACE DRAINAGE RELEASE EASEMENT
BAE	BRIDGE AND ACCESS EASEMENT
*	EASEMENT TO BE QUITCLAIMED BY SEPARATE INSTRUMENT

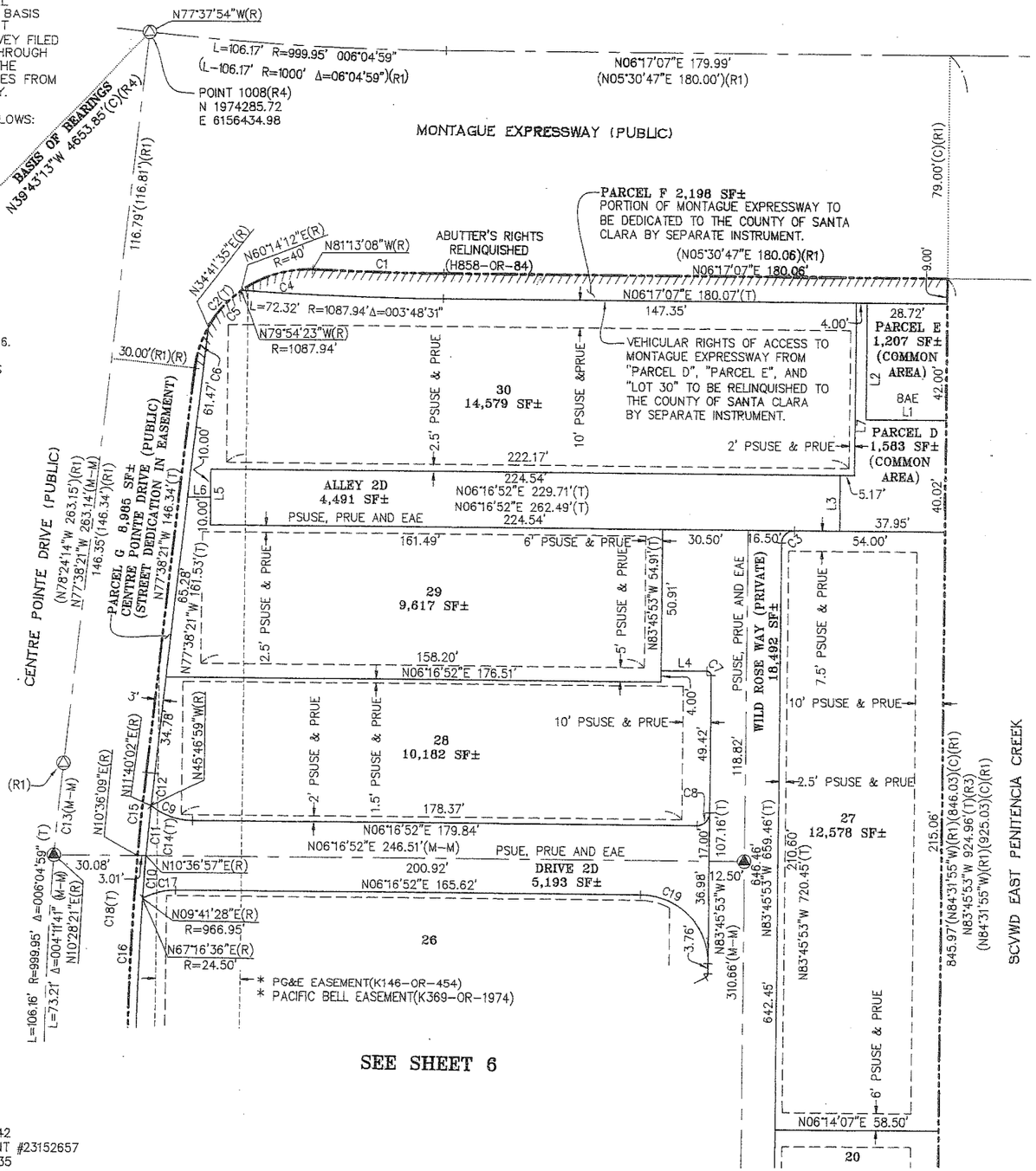

0 30 60 90
SCALE IN FEET: 1"= 30'

LINE TABLE		
LINE	BEARING	DIST
L1	N06°17'07"E	28.75'
L2	N83°43'08"W	42.00'
L3	N83°43'08"W	20.00'
L4	N06°14'07"E	16.50'
L5	N83°43'08"W	20.00'
L6	N06°16'52"E	8.06'
L7	N83°43'08"W	62.02'

CURVE TABLE			
CURVE	LENGTH	RADIUS	DELTA
C1	47.00'	1078.94'	2°29'45"
C2	60.33'	40.00'	86°25'12"
C3	7.07'	4.50'	90°02'45"
C4	26.91'	40.00'	38°32'40"
C5	17.83'	40.00'	25°32'37"
C6	15.59'	40.00'	22°19'56"
C7	2.36'	1.50'	90°00'00"
C8	7.07'	4.50'	90°02'45"
C9	16.22'	24.50'	37°56'09"
C10	15.61'	966.95'	0°55'30"
C11	17.74'	966.95'	1°03'04"
C12	11.71'	966.95'	0°41'37"
C13	32.95'	999.95'	1°53'18"
C14	102.66'	966.95'	6°04'59"
C15	29.77'	969.95'	1°45'30"
C16	73.21'	969.95'	4°19'29"
C17	12.40'	24.50'	29°00'16"
C18	102.98'	969.95'	6°04'59"
C19	38.46'	24.50'	89°57'15"

TRACT 10363
CENTRE POINTE

SUBDIVISION FOR CONDOMINIUM PURPOSES

SANTA CLARA COUNTY, CALIFORNIA
CITY OF MILPITAS

BEING A SUBDIVISION OF PARCEL 1 AND A PORTION OF CENTRE POINTE DRIVE AS SHOWN ON THE PARCEL MAP, FILED SEPTEMBER 15, 1983 IN BOOK 517 OF MAPS, PAGES 42 AND 43, RECORDS OF SANTA CLARA COUNTY, CALIFORNIA; AND ADJUSTED PARCEL 2 AND ADJUSTED PARCEL 3 AS SHOWN ON THE CERTIFICATE OF COMPLIANCE FOR LOT LINE ADJUSTMENT NO. L.L.A. 2015-005, RECORDED NOVEMBER 20, 2015 AS DOCUMENT #23152657, OFFICIAL RECORDS OF SANTA CLARA COUNTY, CALIFORNIA

REFERENCES:

(R1) PARCEL MAP - 517-M-42
(R2) CERTIFICATE OF COMPLIANCE - DOCUMENT #23152657
(R3) TRACT 10148 - 862-M-35
(R4) RECORD OF SURVEY - 678-M-10

Prepared By:
RUGGERI-JENSEN-AZAR
8055 Camino Arroyo, Gilroy, CA 95020

OCTOBER 2016

JOB #122015

SHEET 7 OF 7 SHEETS

BK 898 / PG 46-46

CITY OF MILPITAS
AGENDA REPORT
(AR)

Item Title:	**Adopt a Resolution Approving the Fiscal Year 2024-25 User and Regulatory Fee Schedule (Staff Contact: Luz Cofresí-Howe, Finance Director, 408-586-3111)**
Category:	Public Hearings-Leadership and Support Services
Meeting Date:	5/21/2024
Recommendation:	Adopt a resolution approving the Fiscal Year 2024-25 User and Regulatory Fee Schedule.

BACKGROUND:

Consistent with Council adopted fiscal policy regarding user fees, staff is bringing forward the attached User and Regulatory Fee Schedule for Fiscal Year 2024-25 for Council consideration and adoption. Per the fiscal policy, all fees were reviewed for potential adjustments to recover the full cost of services provided.

The City user and regulatory fee schedule identifies fees for services and activities provided at the request of, or on behalf of, a single party as opposed to the public at large. Examples of user and regulatory fees collected by the City of Milpitas and municipalities throughout California include, but are not limited to:

- **Planning Fees**, such as entitlement review and review for compliance with the zoning code;
- **Building Fees**, such as permitting of new construction or modifications to existing structures;
- **Engineering Fees**, such as map review, encroachment permitting, and public improvement review;
- **Utility Fees**, such as requests for sewer lateral inspections, and restoration of discontinued service;
- **Police Fees**, such as vehicle impound and false alarm response;
- **Animal Regulation Fees,** such as licensing and impound fees;
- **Fire Fees**, such as annual inspections and construction review to ensure compliance with the fire code;
- **Recreation Fees**, such as program participation fees, and facility rental fees; and
- **Administrative Fees**, such as license application review fees.

User and regulatory fees specifically exclude:

- Taxes
- Assessments
- Franchise Fees
- Development Impact Fees
- Fines or Penalties
- Utility Rates and Services Charges

User and regulatory fees are established by the City Council. The fee schedule was most recently comprehensively updated on April 18, 2023.

The fee schedule is reviewed annually by City staff as part of the normal course of operations. Typically, a cost-of-service study is completed every three to five years, with incremental updates occurring in the years in between comprehensive studies. This update represents an interim year update with minor, incremental changes proposed that incorporate feedback received during prior fee studies, and feedback received subsequent to adoption of the City's current schedule of fees.

ANALYSIS:
During interim years (i.e., during years in between comprehensive fee studies) the City Council has authorized inflationary adjustments to fees. The inflationary adjustments are based on the estimated average annual increase in total employee compensation costs, with distinct averages calculated for employees commonly classified as miscellaneous employees and employees commonly classified as safety employees. If the estimated average employee compensation costs do not change or goes down, no change shall be made to the fee schedule for that year unless an adjustment is made to targeted cost recovery levels or fee study findings indicate that an adjustment is appropriate. The City's annual budgeting process includes forecasted adjustments to City operating costs. For FY 2024-25, Miscellaneous Employee Compensation will increase by 5.8% and Safety Employee Compensation will increase by 6.06%.

Based on these changes to compensation costs, non-safety related fees are proposed to increase by 5.8% and safety-related related fees are proposed to increase by 6.06%[1]

In addition to the inflationary adjustments, several discrete changes are proposed to enhance fee schedule clarity, recalibrate fees to the City's current costs of service, and comply with State of California limitations for various fees. Discrete fee adjustments include:

Development-Related Fees

- Update the Certificate of Occupancy permit fee in to 2 categories based on the floor area of the business; and
- Clarify the fee schedule to reflect current service offerings, including:
    - Single Family Districts
    - Site Development Requiring Planning Commission or City Council Approval
    - Conditional Use Permits for Multi-Family and Non-Residential
    - Deletion of the Special Use Permit Fee

Recreation Fees

- Adjust fees to align to the City Council adopted recreation cost recovery policy, by:
    - Deletion of antiquated fees no longer in use; and
    - Adding fees for the following:
        - Fitness Passes – per visit packages for non-residents
        - Sports Center Unlimited Packages
        - MSC Dance Studio rental
        - Rental deposit for Sal Cracolice Facility Amphitheater
        - Senior Center Event Non-Member Fee

POLICY ALTERNATIVES:
As only minor fee adjustments are proposed, in line with the adopted City Fiscal Policy regarding user fees, no alternatives are recommended.

FISCAL IMPACT:
The anticipated revenue impact of the proposed changes is $700,000 per year.

CALIFORNIA ENVIRONMENTAL QUALITY ACT:
The fees (charges) authorized by this Resolution are statutorily exempt from environmental review under Guideline 15273 of the California Environmental Quality Act (CEQA), which provides an exemption for the establishment or modification of charges by public agencies, which the public agency finds are for the purpose of meeting operating expenses.

RECOMMENDATION:
Adopt a resolution approving the Fiscal Year 2024-25 User and Regulatory Fee Schedule.

---

[1] Rounding may result in adjustments marginally different than the percentages listed above.

ATTACHMENTS:

(a) Resolution Approving the User and Regulatory Fee Schedule for Fiscal Year 2024-25
(b) Illustration of Current and Proposed Fees and Fee Schedule Changes

RESOLUTION NO. _____

A RESOLUTION OF THE CITY COUNCIL OF THE CITY OF MILPITAS APPROVING THE USER AND REGULATORY FEE SCHEDULE FOR FISCAL YEAR 2024-25

WHEREAS, the City of Milpitas (the "City") charges fees for licenses, permits, and various services provided by the City (collectively, the "Fees"); and

WHEREAS, the Fees are established to offset all, or portions of, the costs of providing the various services for which the Fees are collected; and

WHEREAS, certain of the Fees are subject to the adoption procedures set forth under Government Code section 66016, and others are subject to the procedures of Government Code section 66018; and

WHEREAS, in addition to Fees, the City's User and Regulatory Fee Schedule also identifies various fines and penalties (the "Penalties") for violations of applicable State or local law, including violation of a provision of any ordinance or the City's Municipal Code; and

WHEREAS, historically the City has consolidated various fees, rates, and charges in a Master Fee Schedule including water and sewer service fees and charges adopted pursuant to the procedural and substantive requirements of article XIII D, section 6 of the California Constitution (also known as "Proposition 218") and development impact fees adopted pursuant to the procedural and substantive requirements of Government Code Section 66000 *et seq.* ("Mitigation Fee Act"); and

WHEREAS, in order to increase clarity regarding the user and regulatory fees governed by this resolution and ensure that water and sewer service fees and charges and development impact fees adopted and governed by separate actions are not inadvertently reviewed along with user and regulatory fees, these items will be identified in distinct schedules moving forward; and

WHEREAS, water and sewer service fees and charges and development impact fees are not being considered, modified, or increased as part of this resolution; and

WHEREAS, staff recommends authorizing the Finance Director to make annual inflationary adjustments for various fees identified in the User and Regulatory Fee Schedule; and

WHEREAS, inflationary adjustments will be based on the estimated average annual increase in total employee compensation costs, with distinct averages calculated for employees commonly classified as miscellaneous employees and employees commonly classified as safety employees; and

WHEREAS, if the estimated average employee compensation costs do not change or go down, no change shall be made to the fee schedule for that year unless an adjustment is made to targeted cost recovery levels or fee study findings indicate that an adjustment is appropriate; and

WHEREAS, the City Council now wishes to adopt the updated User and Regulatory Fee Schedule set forth in Exhibit 1 hereto; and

NOW, THEREFORE, the City Council of the City of Milpitas hereby finds, determines, and resolves as follows:

1. The above Recitals are true and correct and by this reference incorporated herein.

2. The City Council hereby approves the User and Regulatory Fee Schedule included herewith as **Exhibit 1**. The fees and penalties adopted pursuant to this Resolution shall supersede any prior fees, charges, penalties, or other exactions imposed by resolution or otherwise by the City Council, to the extent such prior fees, charges, penalties, or other

exactions conflict with the Fees and Penalties set forth in Exhibit 1 hereto.

3. The City Council has considered the full record before it, which may include but is not limited to such things as the staff report, testimony by staff and the public, and other materials and evidence submitted or provided to it. Based upon such consideration, the City Council finds and determines that:

   (a) The Fees established by this Resolution:

      (1) are imposed for a specific government service provided directly to the payor, or for reasonable regulatory costs of the City for issuing licenses and permits, performing investigations, inspections, and administrative enforcements of the City's Municipal Code or other rules or ordinances;

      (2) are no more than necessary to cover the reasonable costs of the governmental activity for which the Fee is imposed; and

      (3) the manner in which those costs are allocated to a payor bear a fair or reasonable relationship to the payor's burdens on, or benefits received from, the governmental activity for which the Fee is imposed.

   (b) The Penalties established by this resolution are imposed for a violation of applicable State or local law, including violation of an ordinance of the City or the Municipal Code, and persons upon whom the Penalty is imposed have adequate rights to appeal such penalty under the Municipal Code.

   (c) The Fees and Penalties are not taxes within the meaning of California Constitution article XIII C, section 1(e).

4. The Finance Director has authority to make annual inflationary adjustments for various fees identified in the Master Fee Schedule based on the estimated average annual increase in total employee compensation costs, with distinct averages calculated for employees commonly classified as miscellaneous employees and employees commonly classified as safety employees. If the estimated average employee compensation costs do not change or go down, no change shall be made to the fee schedule for that year unless an adjustment is made to targeted cost recovery levels or fee study findings indicate that an adjustment is appropriate.

5. The inflationary changes authorized by this Resolution do not apply to the rates for water and sewer service fees and charges. These rates and charges are established pursuant to the procedural and substantive requirements of article XIII D, section 6 of the California Constitution (also known as "Proposition 218"). Any reference to rates for water and sewer service fees and charges are included in the User and Regulatory Fee Schedule for information purposes only and are not considered, modified, or "increased" as such term is defined under Government Code section 53750 as part of the City's fee schedule update.

6. The inflationary changes authorized by this Resolution do not apply to development impact fees. These fees are established pursuant to the procedural and substantive requirements of Government Code Section 66000 *et seq.* ("Mitigation Fee Act"). Any reference to the development impact fees are included in the User and Regulatory Fee Schedule for information purposes only and are not considered, modified, or "increased" as part of the City's fee schedule update.

7. The updated User and Regulatory Fee Schedule will become effective sixty (60) days after adoption.

PASSED AND ADOPTED this _____ day of _____, 2024 by the following vote:

AYES:

NOES:

ABSENT:

ABSTAIN:

ATTEST:

_____
Suzanne Guzzetta, City Clerk

APPROVED

_____
Carmen Montano, Mayor

APPROVED AS TO FORM:

_____
Michael Mutalipassi, City Attorney

Exhibit 1

Illustration of Current and Proposed Fees

Effective Fiscal Year 2024-25

City of Milpitas
USER AND REGULATORY FEE SCHEDULE

Services / Activities / Subject Matter	Page
BUILDING	3
ANIMAL REGULATION	23
PLANNING	24
ENGINEERING	27
PUBLIC WORKS	28
FIRE	31
AMBULANCE	37
POLICE	40
RECREATION	42
FINANCE	56
CITY CLERK	57
INFORMATION SERVICES	58

City of Milpitas

BUILDING SAFETY AND HOUSING - CONSTRUCTION

New Construction, Tenant Improvements, Remodels

	Occupancy Classification	Threshold SqFt	FY 23/24 Fee Plan Review Base Fee	FY 23/24 Fee Plan Review Add'l 100 SF or Fraction Thereof	FY 23/24 Fee Inspection Base Fee	FY 23/24 Fee Inspection Add'l 100 SF or Fraction Thereof	FY 24/25 Fee Plan Review Base Fee	FY 24/25 Fee Plan Review Add'l 100 SF or Fraction Thereof	FY 24/25 Fee Inspection Base Fee	FY 24/25 Fee Inspection Add'l 100 SF or Fraction Thereof	Percent Change	Y'rly Infl'tr
1	Single-Family, Two-Family, Additional Dwelling Units / Remodels	100	$ 278.65		$ 456.21		$ 294.81		$ 482.67		5.80%	Y
		200	$ 399.24		$ 684.32		$ 422.39		$ 724.01		5.80%	Y
		300	$ 580.12		$ 912.42		$ 613.76		$ 965.34		5.80%	Y
		400	$ 1,062.47		$ 1,254.58		$ 1,124.09		$ 1,327.35		5.80%	Y
		500	$ 1,303.64	$ 164.26	$ 1,824.84	$ 182.48	$ 1,379.25	$ 173.79	$ 1,930.69	$ 193.07	5.80%	Y
		1,000	$ 2,124.93	$ 192.94	$ 2,737.27	$ 182.48	$ 2,248.18	$ 204.13	$ 2,896.03	$ 193.07	5.80%	Y
		1,500	$ 3,089.63	$ 192.94	$ 3,649.69	$ 273.73	$ 3,268.83	$ 204.13	$ 3,861.37	$ 289.60	5.80%	Y
		2,000	$ 4,054.33	$ 164.26	$ 5,018.32	$ 364.97	$ 4,289.49	$ 173.79	$ 5,309.39	$ 386.14	5.80%	Y
		2,500	$ 4,875.63	$ 144.71	$ 6,843.17	$ 364.97	$ 5,158.41	$ 153.10	$ 7,240.07	$ 386.14	5.80%	Y
		3,000	$ 5,599.15	$ 82.13	$ 8,668.01	$ 159.67	$ 5,923.90	$ 86.89	$ 9,170.76	$ 168.94	5.80%	Y
		4,000	$ 6,420.44	$ 96.47	$ 10,264.75	$ 228.11	$ 6,792.83	$ 102.07	$ 10,860.11	$ 241.34	5.80%	Y
		5,000	$ 7,385.14	$ 48.24	$ 12,545.81	$ 114.05	$ 7,813.48	$ 51.03	$ 13,273.47	$ 120.67	5.80%	Y
	Tract or Repetitive Fees:		25% of Original		Same as regular		25% of Original		Same as regular			N
	Commercial / Multi-Family / Non-Residential - New Construction, Tenant Improvement, and Shell											
2	A-Assembly - New Construction	1,500	$ 4,494.01	$ 65.54	$ 11,476.56	$ 81.98	$ 4,754.67	$ 69.34	$ 12,142.20	$ 86.73	5.80%	Y
		7,500	$ 8,426.28	$ 93.63	$ 16,395.09	$ 131.16	$ 8,915.00	$ 99.06	$ 17,346.01	$ 138.77	5.80%	Y
		15,000	$ 15,448.17	$ 84.26	$ 26,232.14	$ 139.90	$ 16,344.17	$ 89.15	$ 27,753.61	$ 148.02	5.80%	Y
		30,000	$ 28,087.59	$ 15.60	$ 47,217.86	$ 59.02	$ 29,716.67	$ 16.51	$ 49,956.50	$ 62.45	5.80%	Y
		75,000	$ 35,109.48	$ 20.60	$ 73,777.91	$ 24.05	$ 37,145.83	$ 21.79	$ 78,057.02	$ 25.44	5.80%	Y
		150,000	$ 50,557.66	$ 33.71	$ 91,812.51	$ 61.43	$ 53,490.00	$ 35.66	$ 97,137.63	$ 64.99	5.80%	Y
3	A-Assembly - Tenant Improvement	500	$ 1,685.73	$ 73.75	$ 3,193.48	$ 68.43	$ 1,783.50	$ 78.03	$ 3,378.70	$ 72.40	5.80%	Y
		2,500	$ 3,160.74	$ 105.36	$ 4,562.11	$ 109.49	$ 3,344.06	$ 111.47	$ 4,826.71	$ 115.84	5.80%	Y
		5,000	$ 5,794.69	$ 94.82	$ 7,299.38	$ 116.79	$ 6,130.78	$ 100.32	$ 7,722.74	$ 123.56	5.80%	Y
		10,000	$ 10,535.79	$ 23.62	$ 13,138.88	$ 49.27	$ 11,146.87	$ 24.99	$ 13,900.94	$ 52.13	5.80%	Y
		25,000	$ 14,078.73	$ 39.59	$ 20,529.50	$ 20.07	$ 14,895.30	$ 41.88	$ 21,720.22	$ 21.24	5.80%	Y
		50,000	$ 23,975.45	$ 47.95	$ 25,547.83	$ 51.10	$ 25,366.03	$ 50.73	$ 27,029.60	$ 54.06	5.80%	Y
5	B - Business - New Construction:	1,000	$ 4,249.87	$ 91.74	$ 7,983.70	$ 85.54	$ 4,496.36	$ 97.06	$ 8,446.75	$ 90.50	5.80%	Y
		5,000	$ 7,919.62	$ 126.45	$ 11,405.28	$ 136.86	$ 8,378.96	$ 133.79	$ 12,066.79	$ 144.80	5.80%	Y
		10,000	$ 14,242.30	$ 112.44	$ 18,248.45	$ 145.99	$ 15,068.35	$ 118.96	$ 19,306.86	$ 154.45	5.80%	Y
		20,000	$ 25,486.24	$ 20.75	$ 32,847.21	$ 61.59	$ 26,964.44	$ 21.95	$ 34,752.34	$ 65.16	5.80%	Y
		50,000	$ 31,711.15	$ 32.62	$ 51,323.76	$ 30.11	$ 33,550.40	$ 34.51	$ 54,300.54	$ 31.86	5.80%	Y
		100,000	$ 48,019.77	$ 48.02	$ 66,378.73	$ 66.37	$ 50,804.92	$ 50.80	$ 70,228.70	$ 70.22	5.80%	Y

City of Milpitas

BUILDING SAFETY AND HOUSING - CONSTRUCTION

New Construction, Tenant Improvements, Remodels

			FY 23/24 Fee Plan Review		FY 23/24 Fee Inspection		FY 24/25 Fee Plan Review		FY 24/25 Fee Inspection			
Occupancy Classification		Threshold SqFt	Base Fee	Add'l 100 SF or Fraction Thereof	Base Fee	Add'l 100 SF or Fraction Thereof	Base Fee	Add'l 100 SF or Fraction Thereof	Base Fee	Add'l 100 SF or Fraction Thereof	Percent Change	Y'rly Infl'tr
6	B - Business - Tenant Improvement:	500	$ 1,628.84	$ 71.26	$ 3,492.87	$ 74.85	$ 1,723.32	$ 75.40	$ 3,695.45	$ 79.19	5.80%	Y
		2,500	$ 3,054.08	$ 101.80	$ 4,989.81	$ 119.76	$ 3,231.22	$ 107.71	$ 5,279.22	$ 126.70	5.80%	Y
		5,000	$ 5,599.15	$ 91.62	$ 7,983.70	$ 127.74	$ 5,923.90	$ 96.94	$ 8,446.75	$ 135.15	5.80%	Y
		10,000	$ 10,180.28	$ 16.97	$ 14,370.65	$ 53.89	$ 10,770.73	$ 17.95	$ 15,204.15	$ 57.02	5.80%	Y
		25,000	$ 12,725.35	$ 22.40	$ 22,454.15	$ 21.96	$ 13,463.42	$ 23.70	$ 23,756.49	$ 23.23	5.80%	Y
		50,000	$ 18,324.50	$ 36.65	$ 27,942.94	$ 55.89	$ 19,387.32	$ 38.77	$ 29,563.63	$ 59.13	5.80%	Y
7	E - Education - New Construction:	500	$ 1,911.37	$ 83.62	$ 4,391.03	$ 94.09	$ 2,022.23	$ 88.47	$ 4,645.71	$ 99.55	5.80%	Y
		2,500	$ 3,583.82	$ 119.46	$ 6,272.90	$ 150.55	$ 3,791.68	$ 126.39	$ 6,636.73	$ 159.28	5.80%	Y
		5,000	$ 6,570.34	$ 107.51	$ 10,036.65	$ 160.59	$ 6,951.42	$ 113.75	$ 10,618.77	$ 169.90	5.80%	Y
		10,000	$ 11,946.07	$ 19.91	$ 18,065.96	$ 67.75	$ 12,638.94	$ 21.06	$ 19,113.79	$ 71.68	5.80%	Y
		25,000	$ 14,932.59	$ 26.28	$ 28,228.07	$ 27.60	$ 15,798.68	$ 27.81	$ 29,865.30	$ 29.20	5.80%	Y
		50,000	$ 21,502.92	$ 43.01	$ 35,128.26	$ 70.25	$ 22,750.09	$ 45.50	$ 37,165.70	$ 74.33	5.80%	Y
8	E - Education - Tenant Improvement:	100	$ 898.80	$ 196.61	$ 1,596.74	$ 171.08	$ 950.93	$ 208.02	$ 1,689.35	$ 181.00	5.80%	Y
		500	$ 1,685.26	$ 280.88	$ 2,281.06	$ 273.73	$ 1,783.00	$ 297.17	$ 2,413.36	$ 289.60	5.80%	Y
		1,000	$ 3,089.63	$ 252.79	$ 3,649.69	$ 291.98	$ 3,268.83	$ 267.45	$ 3,861.37	$ 308.91	5.80%	Y
		2,000	$ 5,617.52	$ 46.81	$ 6,569.44	$ 123.18	$ 5,943.33	$ 49.53	$ 6,950.47	$ 130.32	5.80%	Y
		5,000	$ 7,021.90	$ 61.79	$ 10,264.75	$ 50.18	$ 7,429.17	$ 65.38	$ 10,860.11	$ 53.09	5.80%	Y
		10,000	$ 10,111.53	$ 101.11	$ 12,773.91	$ 127.74	$ 10,698.00	$ 106.98	$ 13,514.80	$ 135.15	5.80%	Y
9	F - Factory - New Construction:	5,000	$ 6,179.27	$ 21.25	$ 9,124.22	$ 45.62	$ 6,537.67	$ 22.48	$ 9,653.43	$ 48.27	5.80%	Y
		25,000	$ 10,429.14	$ 47.87	$ 18,248.45	$ 109.49	$ 11,034.03	$ 50.65	$ 19,306.86	$ 115.84	5.80%	Y
		50,000	$ 22,396.61	$ 15.44	$ 45,621.12	$ 31.93	$ 23,695.61	$ 16.33	$ 48,267.15	$ 33.79	5.80%	Y
		100,000	$ 30,114.21	$ 8.91	$ 61,588.51	$ 8.36	$ 31,860.83	$ 9.42	$ 65,160.65	$ 8.85	5.80%	Y
		250,000	$ 43,476.60	$ 4.94	$ 74,134.32	$ 15.97	$ 45,998.24	$ 5.23	$ 78,434.11	$ 16.89	5.80%	Y
		500,000	$ 55,828.65	$ 11.16	$ 114,052.80	$ 22.81	$ 59,066.72	$ 11.81	$ 120,667.86	$ 24.14	5.80%	Y
10	F - Factory - Tenant Improvement:	2,000	$ 2,380.34	$ 20.16	$ 2,488.42	$ 20.74	$ 2,518.40	$ 21.33	$ 2,632.75	$ 21.94	5.80%	Y
		10,000	$ 3,993.30	$ 48.39	$ 4,147.37	$ 49.77	$ 4,224.91	$ 51.20	$ 4,387.92	$ 52.66	5.80%	Y
		20,000	$ 8,832.19	$ 16.03	$ 9,124.22	$ 16.59	$ 9,344.46	$ 16.96	$ 9,653.43	$ 17.55	5.80%	Y
		40,000	$ 12,038.57	$ 8.97	$ 12,442.12	$ 9.50	$ 12,736.81	$ 9.49	$ 13,163.77	$ 10.06	5.80%	Y
		100,000	$ 17,421.82	$ 5.14	$ 18,144.76	$ 5.18	$ 18,432.28	$ 5.44	$ 19,197.16	$ 5.48	5.80%	Y
		200,000	$ 22,560.10	$ 11.28	$ 23,328.98	$ 11.66	$ 23,868.58	$ 11.94	$ 24,682.06	$ 12.34	5.80%	Y

City of Milpitas

BUILDING SAFETY AND HOUSING - CONSTRUCTION

New Construction, Tenant Improvements, Remodels

	Occupancy Classification	Threshold SqFt	FY 23/24 Fee Plan Review Base Fee	FY 23/24 Fee Plan Review Add'l 100 SF or Fraction Thereof	FY 23/24 Fee Inspection Base Fee	FY 23/24 Fee Inspection Add'l 100 SF or Fraction Thereof	FY 24/25 Fee Plan Review Base Fee	FY 24/25 Fee Plan Review Add'l 100 SF or Fraction Thereof	FY 24/25 Fee Inspection Base Fee	FY 24/25 Fee Inspection Add'l 100 SF or Fraction Thereof	Percent Change	Y'rly Infl'tr
11	H - Hazardous Materials - New Construction:	1,000	$ 4,858.09	$ 106.27	$ 8,981.66	$ 96.23	$ 5,139.86	$ 112.43	$ 9,502.59	$ 101.81	5.80%	Y
		5,000	$ 9,108.92	$ 151.82	$ 12,830.94	$ 153.97	$ 9,637.24	$ 160.62	$ 13,575.13	$ 162.90	5.80%	Y
		10,000	$ 16,699.69	$ 136.63	$ 20,529.50	$ 164.24	$ 17,668.27	$ 144.56	$ 21,720.22	$ 173.76	5.80%	Y
		20,000	$ 30,363.07	$ 25.30	$ 36,953.11	$ 69.29	$ 32,124.13	$ 26.77	$ 39,096.39	$ 73.31	5.80%	Y
		50,000	$ 37,953.84	$ 33.40	$ 57,739.23	$ 28.23	$ 40,155.16	$ 35.34	$ 61,088.11	$ 29.87	5.80%	Y
		100,000	$ 54,653.53	$ 54.66	$ 71,853.27	$ 71.85	$ 57,823.43	$ 57.83	$ 76,020.75	$ 76.02	5.80%	Y
12	H - Hazardous Materials - Tenant Improvement:	1,000	$ 2,429.05	$ 53.14	$ 4,790.22	$ 51.32	$ 2,569.93	$ 56.22	$ 5,068.05	$ 54.30	5.80%	Y
		5,000	$ 4,554.46	$ 75.91	$ 6,843.17	$ 82.12	$ 4,818.62	$ 80.31	$ 7,240.07	$ 86.88	5.80%	Y
		10,000	$ 8,349.84	$ 68.32	$ 10,949.07	$ 87.59	$ 8,834.14	$ 72.28	$ 11,584.11	$ 92.67	5.80%	Y
		20,000	$ 15,181.53	$ 12.65	$ 19,708.32	$ 36.95	$ 16,062.06	$ 13.39	$ 20,851.41	$ 39.10	5.80%	Y
		50,000	$ 18,976.92	$ 16.70	$ 30,794.26	$ 15.05	$ 20,077.58	$ 17.67	$ 32,580.32	$ 15.93	5.80%	Y
		100,000	$ 27,326.76	$ 27.32	$ 38,321.74	$ 38.32	$ 28,911.72	$ 28.91	$ 40,544.40	$ 40.54	5.80%	Y
13	I - Licensed Clinics - New Construction:	2,000	$ 2,920.17	$ 31.94	$ 5,987.77	$ 32.08	$ 3,089.54	$ 33.79	$ 6,335.06	$ 33.94	5.80%	Y
		10,000	$ 5,475.31	$ 45.63	$ 8,553.96	$ 51.32	$ 5,792.88	$ 48.27	$ 9,050.09	$ 54.30	5.80%	Y
		20,000	$ 10,038.07	$ 41.06	$ 13,686.34	$ 54.75	$ 10,620.28	$ 43.45	$ 14,480.14	$ 57.92	5.80%	Y
		40,000	$ 18,251.04	$ 7.60	$ 24,635.41	$ 23.10	$ 19,309.60	$ 8.05	$ 26,064.26	$ 24.44	5.80%	Y
		100,000	$ 22,813.79	$ 10.04	$ 38,492.82	$ 9.41	$ 24,136.99	$ 10.62	$ 40,725.40	$ 9.96	5.80%	Y
		200,000	$ 32,851.86	$ 16.43	$ 47,902.18	$ 23.95	$ 34,757.27	$ 17.38	$ 50,680.50	$ 25.34	5.80%	Y
14	I - Licensed Clinics - Tenant Improvement:	1,000	$ 1,179.44	$ 25.80	$ 2,494.91	$ 26.73	$ 1,247.85	$ 27.30	$ 2,639.61	$ 28.28	5.80%	Y
		5,000	$ 2,211.46	$ 36.86	$ 3,564.15	$ 42.77	$ 2,339.72	$ 39.00	$ 3,770.87	$ 45.25	5.80%	Y
		10,000	$ 4,054.33	$ 33.17	$ 5,702.64	$ 45.62	$ 4,289.49	$ 35.10	$ 6,033.39	$ 48.27	5.80%	Y
		20,000	$ 7,371.52	$ 6.14	$ 10,264.75	$ 19.25	$ 7,799.07	$ 6.50	$ 10,860.11	$ 20.36	5.80%	Y
		50,000	$ 9,214.40	$ 8.11	$ 16,038.68	$ 7.84	$ 9,748.83	$ 8.58	$ 16,968.92	$ 8.30	5.80%	Y
		100,000	$ 13,268.73	$ 13.27	$ 19,959.24	$ 19.96	$ 14,038.32	$ 14.04	$ 21,116.88	$ 21.12	5.80%	Y
15	M - Mercantile - New Construction:	500	$ 2,415.77	$ 105.69	$ 4,989.81	$ 106.92	$ 2,555.88	$ 111.82	$ 5,279.22	$ 113.13	5.80%	Y
		2,500	$ 4,529.57	$ 150.99	$ 7,128.30	$ 171.08	$ 4,792.28	$ 159.74	$ 7,541.74	$ 181.00	5.80%	Y
		5,000	$ 8,304.20	$ 135.89	$ 11,405.28	$ 182.48	$ 8,785.85	$ 143.77	$ 12,066.79	$ 193.07	5.80%	Y
		10,000	$ 15,098.55	$ 25.16	$ 20,529.50	$ 76.99	$ 15,974.27	$ 26.62	$ 21,720.22	$ 81.45	5.80%	Y
		25,000	$ 18,873.19	$ 33.22	$ 32,077.35	$ 31.36	$ 19,967.83	$ 35.14	$ 33,937.84	$ 33.18	5.80%	Y
		50,000	$ 27,177.39	$ 54.36	$ 39,918.48	$ 79.83	$ 28,753.68	$ 57.51	$ 42,233.75	$ 84.46	5.80%	Y

City of Milpitas

BUILDING SAFETY AND HOUSING - CONSTRUCTION

New Construction, Tenant Improvements, Remodels

	Occupancy Classification	Threshold SqFt	FY 23/24 Fee Plan Review Base Fee	FY 23/24 Fee Plan Review Add'l 100 SF or Fraction Thereof	FY 23/24 Fee Inspection Base Fee	FY 23/24 Fee Inspection Add'l 100 SF or Fraction Thereof	FY 24/25 Fee Plan Review Base Fee	FY 24/25 Fee Plan Review Add'l 100 SF or Fraction Thereof	FY 24/25 Fee Inspection Base Fee	FY 24/25 Fee Inspection Add'l 100 SF or Fraction Thereof	Percent Change	Y'rly Infl'tr
16	M - Mercantile - Tenant Improvement:	250	$ 1,109.28	$ 97.06	$ 1,995.92	$ 85.54	$ 1,173.62	$ 102.69	$ 2,111.69	$ 90.50	5.80%	Y
		1,250	$ 2,079.91	$ 138.66	$ 2,851.32	$ 136.86	$ 2,200.54	$ 146.70	$ 3,016.70	$ 144.80	5.80%	Y
		2,500	$ 3,813.16	$ 124.79	$ 4,562.11	$ 145.99	$ 4,034.32	$ 132.03	$ 4,826.71	$ 154.45	5.80%	Y
		5,000	$ 6,933.02	$ 23.11	$ 8,211.80	$ 61.59	$ 7,335.13	$ 24.45	$ 8,688.09	$ 65.16	5.80%	Y
		12,500	$ 8,666.27	$ 30.51	$ 12,830.94	$ 25.09	$ 9,168.92	$ 32.27	$ 13,575.13	$ 26.55	5.80%	Y
		25,000	$ 12,479.43	$ 49.91	$ 15,967.39	$ 63.87	$ 13,203.24	$ 52.81	$ 16,893.50	$ 67.57	5.80%	Y
17	R-1 - Residential Hotels - New Construction:	2,000	$ 10,808.41	$ 118.22	$ 27,443.96	$ 147.02	$ 11,435.30	$ 125.07	$ 29,035.70	$ 155.55	5.80%	Y
		10,000	$ 20,265.78	$ 168.88	$ 39,205.65	$ 235.23	$ 21,441.19	$ 178.68	$ 41,479.58	$ 248.88	5.80%	Y
		20,000	$ 37,153.92	$ 151.99	$ 62,729.04	$ 250.92	$ 39,308.85	$ 160.81	$ 66,367.33	$ 265.47	5.80%	Y
		40,000	$ 67,552.59	$ 28.15	$ 112,912.27	$ 105.86	$ 71,470.64	$ 29.78	$ 119,461.19	$ 111.99	5.80%	Y
		100,000	$ 84,440.74	$ 37.15	$ 176,425.43	$ 43.13	$ 89,338.30	$ 39.31	$ 186,658.10	$ 45.63	5.80%	Y
		200,000	$ 121,594.66	$ 60.80	$ 219,551.64	$ 109.77	$ 128,647.15	$ 64.33	$ 232,285.64	$ 116.14	5.80%	Y
18	R-1 - Residential Hotels - Tenant Improvement:	500	$ 2,569.37	$ 112.41	$ 6,386.96	$ 136.86	$ 2,718.39	$ 118.93	$ 6,757.40	$ 144.80	5.80%	Y
		2,500	$ 4,817.56	$ 160.59	$ 9,124.22	$ 218.98	$ 5,096.98	$ 169.90	$ 9,653.43	$ 231.68	5.80%	Y
		5,000	$ 8,832.19	$ 144.53	$ 14,598.76	$ 233.58	$ 9,344.46	$ 152.91	$ 15,445.49	$ 247.13	5.80%	Y
		10,000	$ 16,058.54	$ 26.76	$ 26,277.77	$ 98.54	$ 16,989.93	$ 28.32	$ 27,801.88	$ 104.26	5.80%	Y
		25,000	$ 20,073.17	$ 35.33	$ 41,059.01	$ 40.15	$ 21,237.41	$ 37.38	$ 43,440.43	$ 42.48	5.80%	Y
		50,000	$ 28,905.36	$ 57.81	$ 51,095.66	$ 102.19	$ 30,581.87	$ 61.16	$ 54,059.20	$ 108.12	5.80%	Y
19	R-2 - Residential Multi-Family - New Construction:	2,000	$ 22,608.05	$ 11.83	$ 34,928.67	$ 187.12	$ 23,919.32	$ 12.52	$ 36,954.53	$ 197.97	5.80%	Y
		10,000	$ 23,554.53	$ 196.29	$ 49,898.10	$ 299.39	$ 24,920.69	$ 207.67	$ 52,792.19	$ 316.75	5.80%	Y
		20,000	$ 43,183.30	$ 176.66	$ 79,836.96	$ 319.35	$ 45,687.93	$ 186.91	$ 84,467.50	$ 337.87	5.80%	Y
		40,000	$ 78,515.09	$ 32.71	$ 143,706.53	$ 134.72	$ 83,068.97	$ 34.61	$ 152,041.51	$ 142.54	5.80%	Y
		100,000	$ 98,143.86	$ 43.18	$ 224,541.45	$ 54.89	$ 103,836.21	$ 45.69	$ 237,564.86	$ 58.07	5.80%	Y
		200,000	$ 141,327.16	$ 70.66	$ 279,429.36	$ 139.71	$ 149,524.14	$ 74.76	$ 295,636.27	$ 147.81	5.80%	Y
20	R-2 - Residential Multi-Family - Tenant Improvement:	500	$ 3,270.97	$ 143.10	$ 6,985.73	$ 149.69	$ 3,460.68	$ 151.40	$ 7,390.91	$ 158.38	5.80%	Y
		2,500	$ 6,133.06	$ 204.44	$ 9,979.62	$ 239.51	$ 6,488.78	$ 216.29	$ 10,558.44	$ 253.40	5.80%	Y
		5,000	$ 11,243.94	$ 183.99	$ 15,967.39	$ 255.48	$ 11,896.09	$ 194.66	$ 16,893.50	$ 270.30	5.80%	Y
		10,000	$ 20,443.54	$ 34.07	$ 28,741.31	$ 107.78	$ 21,629.26	$ 36.05	$ 30,408.30	$ 114.03	5.80%	Y
		25,000	$ 25,554.42	$ 44.98	$ 44,908.29	$ 43.91	$ 27,036.58	$ 47.58	$ 47,512.97	$ 46.46	5.80%	Y
		50,000	$ 36,798.36	$ 73.60	$ 55,885.87	$ 111.77	$ 38,932.67	$ 77.87	$ 59,127.25	$ 118.25	5.80%	Y

City of Milpitas

BUILDING SAFETY AND HOUSING - CONSTRUCTION

New Construction, Tenant Improvements, Remodels

	Occupancy Classification	Threshold SqFt	FY 23/24 Fee Plan Review Base Fee	FY 23/24 Fee Plan Review Add'l 100 SF or Fraction Thereof	FY 23/24 Fee Inspection Base Fee	FY 23/24 Fee Inspection Add'l 100 SF or Fraction Thereof	FY 24/25 Fee Plan Review Base Fee	FY 24/25 Fee Plan Review Add'l 100 SF or Fraction Thereof	FY 24/25 Fee Inspection Base Fee	FY 24/25 Fee Inspection Add'l 100 SF or Fraction Thereof	Percent Change	Y'rly Infl'tr
21	R-4 - Care / Assisted Living - New Construction:	2,000	$ 6,598.81	$ 72.17	$ 14,969.43	$ 80.19	$ 6,981.55	$ 76.36	$ 15,837.66	$ 84.84	5.80%	Y
		10,000	$ 12,372.78	$ 103.11	$ 21,384.90	$ 128.31	$ 13,090.40	$ 109.09	$ 22,625.22	$ 135.75	5.80%	Y
		20,000	$ 22,683.42	$ 92.80	$ 34,215.84	$ 136.86	$ 23,999.06	$ 98.18	$ 36,200.36	$ 144.80	5.80%	Y
		40,000	$ 41,242.59	$ 17.18	$ 61,588.51	$ 57.74	$ 43,634.66	$ 18.18	$ 65,160.65	$ 61.09	5.80%	Y
		100,000	$ 51,553.23	$ 22.68	$ 96,232.05	$ 23.52	$ 54,543.32	$ 24.00	$ 101,813.51	$ 24.89	5.80%	Y
		200,000	$ 74,236.66	$ 37.12	$ 119,755.44	$ 59.88	$ 78,542.38	$ 39.28	$ 126,701.26	$ 63.35	5.80%	Y
22	R-4 - Care / Assisted Living - Tenant Improvement:	1,000	$ 3,214.08	$ 70.31	$ 7,983.70	$ 85.54	$ 3,400.50	$ 74.39	$ 8,446.75	$ 90.50	5.80%	Y
		5,000	$ 6,026.41	$ 100.44	$ 11,405.28	$ 136.86	$ 6,375.94	$ 106.27	$ 12,066.79	$ 144.80	5.80%	Y
		10,000	$ 11,048.41	$ 90.40	$ 18,248.45	$ 145.99	$ 11,689.22	$ 95.64	$ 19,306.86	$ 154.45	5.80%	Y
		20,000	$ 20,088.02	$ 16.74	$ 32,847.21	$ 61.59	$ 21,253.12	$ 17.71	$ 34,752.34	$ 65.16	5.80%	Y
		50,000	$ 25,110.02	$ 22.10	$ 51,323.76	$ 25.09	$ 26,566.40	$ 23.38	$ 54,300.54	$ 26.55	5.80%	Y
		100,000	$ 36,158.43	$ 36.16	$ 63,869.57	$ 63.87	$ 38,255.62	$ 38.26	$ 67,574.00	$ 67.57	5.80%	Y
23	S-1 - Storage Moderate Hazard - New Construction:	1,000	$ 3,930.85	$ 85.99	$ 7,484.72	$ 80.19	$ 4,158.84	$ 90.97	$ 7,918.83	$ 84.84	5.80%	Y
		5,000	$ 7,370.34	$ 122.84	$ 10,692.45	$ 128.31	$ 7,797.82	$ 129.96	$ 11,312.61	$ 135.75	5.80%	Y
		10,000	$ 13,512.29	$ 110.56	$ 17,107.92	$ 136.86	$ 14,296.00	$ 116.97	$ 18,100.18	$ 144.80	5.80%	Y
		20,000	$ 24,567.79	$ 20.47	$ 30,794.26	$ 57.74	$ 25,992.73	$ 21.66	$ 32,580.32	$ 61.09	5.80%	Y
		50,000	$ 30,709.74	$ 27.02	$ 48,116.03	$ 23.52	$ 32,490.91	$ 28.59	$ 50,906.76	$ 24.89	5.80%	Y
		100,000	$ 44,222.03	$ 44.22	$ 59,877.72	$ 59.88	$ 46,786.91	$ 46.78	$ 63,350.63	$ 63.35	5.80%	Y
24	S-2 - Storage Low Hazard - New Construction:	1,000	$ 2,161.68	$ 47.29	$ 4,391.03	$ 47.05	$ 2,287.06	$ 50.03	$ 4,645.71	$ 49.78	5.80%	Y
		5,000	$ 4,053.16	$ 67.55	$ 6,272.90	$ 75.27	$ 4,288.24	$ 71.47	$ 6,636.73	$ 79.64	5.80%	Y
		10,000	$ 7,430.78	$ 60.80	$ 10,036.65	$ 80.29	$ 7,861.77	$ 64.32	$ 10,618.77	$ 84.95	5.80%	Y
		20,000	$ 13,510.52	$ 11.26	$ 18,065.96	$ 33.87	$ 14,294.13	$ 11.91	$ 19,113.79	$ 35.84	5.80%	Y
		50,000	$ 16,888.15	$ 14.86	$ 28,228.07	$ 13.80	$ 17,867.66	$ 15.72	$ 29,865.30	$ 14.60	5.80%	Y
		100,000	$ 24,318.93	$ 24.32	$ 35,128.26	$ 35.13	$ 25,729.43	$ 25.73	$ 37,165.70	$ 37.16	5.80%	Y
25	S - Storage - Tenant Improvement:	500	$ 1,600.40	$ 70.02	$ 2,744.40	$ 58.81	$ 1,693.23	$ 74.08	$ 2,903.57	$ 62.22	5.80%	Y
		2,500	$ 3,000.76	$ 100.03	$ 3,920.57	$ 94.09	$ 3,174.80	$ 105.83	$ 4,147.96	$ 99.55	5.80%	Y
		5,000	$ 5,501.38	$ 90.02	$ 6,272.90	$ 100.37	$ 5,820.47	$ 95.24	$ 6,636.73	$ 106.19	5.80%	Y
		10,000	$ 10,002.52	$ 16.67	$ 11,291.23	$ 42.34	$ 10,582.66	$ 17.64	$ 11,946.12	$ 44.80	5.80%	Y
		25,000	$ 12,503.15	$ 22.01	$ 17,642.54	$ 17.25	$ 13,228.33	$ 23.28	$ 18,665.81	$ 18.25	5.80%	Y
		50,000	$ 18,004.53	$ 36.01	$ 21,955.16	$ 43.91	$ 19,048.79	$ 38.10	$ 23,228.56	$ 46.45	5.80%	Y

City of Milpitas

BUILDING SAFETY AND HOUSING - CONSTRUCTION

New Construction, Tenant Improvements, Remodels

	Occupancy Classification	Threshold SqFt	FY 23/24 Fee Plan Review Base Fee	FY 23/24 Fee Plan Review Add'l 100 SF or Fraction Thereof	FY 23/24 Fee Inspection Base Fee	FY 23/24 Fee Inspection Add'l 100 SF or Fraction Thereof	FY 24/25 Fee Plan Review Base Fee	FY 24/25 Fee Plan Review Add'l 100 SF or Fraction Thereof	FY 24/25 Fee Inspection Base Fee	FY 24/25 Fee Inspection Add'l 100 SF or Fraction Thereof	Percent Change	Y'rly Infl'tr
26	U - Utility - Misc - New Construction:	150	$ 927.24	$ 135.22	$ 1,696.54	$ 121.18	$ 981.02	$ 143.07	$ 1,794.93	$ 128.21	5.80%	Y
		750	$ 1,738.58	$ 193.18	$ 2,423.62	$ 193.89	$ 1,839.42	$ 204.38	$ 2,564.19	$ 205.14	5.80%	Y
		1,500	$ 3,187.40	$ 173.86	$ 3,877.80	$ 206.82	$ 3,372.27	$ 183.94	$ 4,102.71	$ 218.81	5.80%	Y
		3,000	$ 5,795.28	$ 32.20	$ 6,980.03	$ 87.25	$ 6,131.40	$ 34.06	$ 7,384.87	$ 92.31	5.80%	Y
		7,500	$ 7,244.09	$ 42.50	$ 10,906.30	$ 35.55	$ 7,664.25	$ 44.96	$ 11,538.86	$ 37.61	5.80%	Y
		15,000	$ 10,431.50	$ 69.55	$ 13,572.28	$ 90.48	$ 11,036.52	$ 73.58	$ 14,359.48	$ 95.73	5.80%	Y
27	U - Utility - Misc - Tenant Improvement:	100	$ 618.16	$ 135.22	$ 1,197.55	$ 128.31	$ 654.02	$ 143.07	$ 1,267.01	$ 135.75	5.80%	Y
		500	$ 1,159.06	$ 193.18	$ 1,710.79	$ 205.30	$ 1,226.28	$ 204.38	$ 1,810.02	$ 217.20	5.80%	Y
		1,000	$ 2,124.93	$ 173.86	$ 2,737.27	$ 218.98	$ 2,248.18	$ 183.94	$ 2,896.03	$ 231.68	5.80%	Y
		2,000	$ 3,863.52	$ 32.20	$ 4,927.08	$ 92.38	$ 4,087.60	$ 34.06	$ 5,212.85	$ 97.74	5.80%	Y
		5,000	$ 4,829.40	$ 42.50	$ 7,698.56	$ 37.64	$ 5,109.50	$ 44.96	$ 8,145.08	$ 39.82	5.80%	Y
		10,000	$ 6,954.33	$ 69.55	$ 9,580.44	$ 95.80	$ 7,357.68	$ 73.58	$ 10,136.10	$ 101.36	5.80%	Y
28	Shell Building:	5,000	$ 5,840.33	$ 25.55	$ 10,977.58	$ 23.52	$ 6,179.07	$ 27.03	$ 11,614.28	$ 24.89	5.80%	Y
		25,000	$ 10,950.62	$ 36.50	$ 15,682.26	$ 37.64	$ 11,585.76	$ 38.62	$ 16,591.83	$ 39.82	5.80%	Y
		50,000	$ 20,076.14	$ 32.85	$ 25,091.62	$ 40.15	$ 21,240.55	$ 34.76	$ 26,546.93	$ 42.48	5.80%	Y
		100,000	$ 36,502.07	$ 6.08	$ 45,164.91	$ 16.94	$ 38,619.19	$ 6.44	$ 47,784.47	$ 17.92	5.80%	Y
		250,000	$ 45,627.59	$ 8.03	$ 70,570.17	$ 6.90	$ 48,273.99	$ 8.50	$ 74,663.24	$ 7.30	5.80%	Y
		500,000	$ 65,703.73	$ 13.14	$ 87,820.66	$ 17.57	$ 69,514.54	$ 13.90	$ 92,914.26	$ 18.59	5.80%	Y

* Amounts exclude City of Milpitas standard permitting fees and State of California fees.

** A - Assembly New Construction per 100 SF amounts adjusted in order to reflect proper scaling from tier to tier. No change proposed to base fee.

*** S-1 - Storage Moderate Hazard - New Construction: per 100 SF amounts adjusted in order to reflect proper scaling from tier to tier. No change proposed to base fee.

City of Milpitas

BUILDING SAFETY AND HOUSING - MISCELLANEOUS

	Activity Description	FY 23/24 Fee	FY 24/25 Fee	Charge Basis	Percent Change	Y'rly Infl'tr	Note
	MISCELLANEOUS FEES - RESIDENTIAL						
	Combination Permits						
1	Attached Garage - 1 to 3 cars	$1,375	$1,455		5.80%	Y	[a]
2	Detached Garage or Accessory Structure	$1,181	$1,250		5.80%	Y	[a]
3	Bathroom Remodel (1 or more if inspected at same time)	$1,007	$1,065		5.80%	Y	[a]
4	Kitchen Remodel	$1,007	$1,065		5.80%	Y	[a]
5	Kitchen and Bathroom Remodel	$1,463	$1,548		5.80%	Y	[a]
6	Patio Enclosure / Sunroom	$1,356	$1,434		5.80%	Y	[a]
7	Garage conversion	$1,295	$1,371		5.80%	Y	[a]
8	Green House	$1,067	$1,129		5.80%	Y	[a]
9	Patio Cover	$1,067	$1,129		5.80%	Y	[a]
10	Window, Skylight or Exterior Door	$893	$945		5.80%	Y	[a]
	Miscellaneous Construction						
11	Wood Fences over 7' high, concrete / masonry over 4' high	$795	$841		5.80%	Y	[a]
12	Sound Wall	$1,378	$1,458		5.80%	Y	[a]
13	Structural Roof Conversions	$2.12	$2.24	per sq ft	5.80%	Y	[a]
14	AC Condenser Replacement	$285	$302		5.80%	Y	
15	Furnace Replacement	$342	$362		5.80%	Y	
16	Water Heater Replacement	$342	$362		5.80%	Y	
17	Solar Permit						
	a) 15kW or less	$450	$450		0.00%	N	
	b) Above 15kW – base	$450	$450	base	0.00%	N	
	c) Above 15kW – per kW	$15	$15	per kw	0.00%	N	
18	Solar Thermal						
	a) 10kWth or less	$450	$450		0.00%	N	
	b) 10kWth or more - base	$450	$450	base	0.00%	N	
	c) 10kWth or more – per kWth	$15	$15	per kWth	0.00%	N	
19	Fireplace reconstruction	$675	$714		5.80%	Y	[a]
20	Siding/stucco replacement	$570	$603		5.80%	Y	
21	Seismic Strengthening	$675	$714		5.80%	Y	[a]
22	Miscellaneous Construction Not Listed	See hourly rates for Plan Review and Inspection	See hourly rates for Plan Review and Inspection			N	

City of Milpitas
BUILDING SAFETY AND HOUSING - MISCELLANEOUS

	Activity Description	FY 23/24 Fee	FY 24/25 Fee	Charge Basis	Percent Change	Y'rly Infl'tr	Note
	MISCELLANEOUS FEES - COMMERCIAL						
	Miscellaneous Construction						
23	Permit Issuance Fee	$196	$207		5.80%	Y	
24	Equipment Installation						
	a) Each Type - Plan Review	$482	$510		5.80%	Y	
	b) Each 2 pieces or fraction thereof - Inspection	$456	$483		5.80%	Y	
25	Racks, each type						
	a) Each Rack Type	$825	$872		5.80%	Y	
	b) Each 5 racks or fraction thereof	$228	$241		5.80%	Y	
26	Roof Screen	$1,053	$1,114		5.80%	Y	[a]
27	Fences	$1,053	$1,114		5.80%	Y	[a]
28	Monument Sign						
	a) Each Piece - Not Electrical	$697	$738		5.80%	Y	[a]
	b) Each Piece - Including Electrical	$872	$922		5.80%	Y	[a]
29	Wall Mounted Sign						
	a) Not Electrical	$469	$496		5.80%	Y	[a]
	b) Including Electrical	$644	$681		5.80%	Y	[a]
30	Solar Permit						
	a) 50kW or less	$1,000	$1,000		0.00%	N	
	b) 50kW – 250kW – Base	$1,000	$1,000	base	0.00%	N	
	c) 50kW – 250kW – per kW above 50kW	$7	$7	per kW	0.00%	N	
	b) Above 250kW – base	$2,400	$2,400	base	0.00%	N	
	c) Above 250kW – per kW	$5	$5	per kW	0.00%	N	
31	Solar Thermal						
	a) 30kWth or less	$1,000	$1,000		0.00%	N	
	b) 30kWth – 260kWth – Base	$1,000	$1,000	base	0.00%	N	
	c) 30kWth – 260kWth – per kWth above 30kWth	$7	$7	per kWth	0.00%	N	
	d) 260+ kWth – Base	$2,610	$2,610	base	0.00%	N	
	e) 260+ kWth – per kWth above 260kWth	$5	$5	per kWth	0.00%	N	
32	Miscellaneous Construction Not Listed	See hourly rates for Plan Review and Inspection	See hourly rates for Plan Review and Inspection			N	

City of Milpitas

BUILDING SAFETY AND HOUSING - MISCELLANEOUS

	Activity Description	FY 23/24 Fee	FY 24/25 Fee	Charge Basis	Percent Change	Y'rly Infl'tr	Note
	Other Plan Check, Inspection and Permit Fees						
33	Certificate of Occupancy (inspection, record review, printing)	~~$709~~				~~Y~~	
	a) Tenant space up to 400 sq ft	$709	$250		-64.73%	Y	
	b) Tenant space over 400 sq ft	$709	$750		5.80%	Y	
34	Temporary Building Permit Issuance *****	$437	$462		5.80%	Y	
35	Accessibility Exception Request	$580	$614		5.80%	Y	
36	Christmas Tree Lot	$326	$345		5.80%	Y	
37	Faithful Performance Bond Execution	$339	$359		5.80%	Y	
38	Inspection Investigation Fee (Construction w/o Permits, Per MMC)	100% of insp. Fee	100% of insp. Fee			N	
	RESIDENTIAL, COMMERCIAL, AND MEP FEES						
	Grading						
39	Permit Issuance Fee	$196	$207		5.80%	Y	
40	Plan Check:						
	a) 0 - 10,000 Cubic Yards	$482	$510		5.80%	Y	
	b) Add for each additional 10,000 CY or fraction thereof	$121	$128		5.80%	Y	
	c) Over 100,000 Cubic Yards	$1,568	$1,659		5.80%	Y	
	d) Over 100,000 Cubic Yards – add for each additional 10,000 CY or fraction thereof	$60	$64		5.80%	Y	
41	Inspection:						
	a) 0 - 10,000 Cubic Yards	$798	$845		5.80%	Y	
	b) Add for each additional 10,000 CY or fraction thereof	$114	$121		5.80%	Y	
	c) Over 100,000 Cubic Yards	$1,825	$1,931		5.80%	Y	
	d) Over 100,000 Cubic Yards – add for each additional 10,000 CY or fraction thereof	$57	$60		5.80%	Y	

City of Milpitas

BUILDING SAFETY AND HOUSING - MISCELLANEOUS

	Activity Description	FY 23/24 Fee	FY 24/25 Fee	Charge Basis	Percent Change	Y'rly Infl'tr	Note
	Site Improvement						
42	Permit Issuance	$196	$207		5.80%	Y	
43	Plan Check						
	a) 0-50,000 SF	$2,412	$2,552		5.80%	Y	
	b) 50,001-100,000 SF	$3,376	$3,572		5.80%	Y	
	c) 100,001-500,000 SF	$9,647	$10,207		5.80%	Y	
	d) 500,001+ SF	$1.45	$1.53	per 100 SF	5.80%	Y	
44	Inspection						
	a) 0-50,000 SF	$3,650	$3,861		5.80%	Y	
	b) 50,001-100,000 SF	$5,475	$5,792		5.80%	Y	
	c) 100,001-500,000 SF	$11,405	$12,067		5.80%	Y	
	d) 500,001+ SF	$1.90	$2.01	per 100 SF	5.80%	Y	
	Pools or Spas						
45	Swimming Pool or Spa						[a]
	a) Private	$1,036	$1,096		5.80%	Y	[a]
	b) Public	$1,633	$1,727		5.80%	Y	[a]
46	Swimming Pool and Spa Together						[a]
	a) Private	$1,734	$1,834		5.80%	Y	[a]
	b) Public	$2,733	$2,891		5.80%	Y	[a]
47	Existing Pools / Spas – Repair or Renovation	$567	$600		5.80%	Y	[a]
	Re-Roofing						
48	Single-Family and Two-Family	$668	$707		5.80%	Y	
49	Multi-Family, Residential, each building	$1,074	$1,136		5.80%	Y	
50	Commercial/Industrial, each building **	$1,359	$1,438		5.80%	Y	

City of Milpitas

BUILDING SAFETY AND HOUSING - MISCELLANEOUS

	Activity Description	FY 23/24 Fee	FY 24/25 Fee	Charge Basis	Percent Change	Y'rly Infl'tr	Note
	Miscellaneous Fee						
51	Change of Address	$665	$703	per request	5.80%	Y	
52	Extension of Plan Check	$98	$103		5.80%	Y	
53	Extension of Permit	$98	$103		5.80%	Y	
54	Records Research	$98	$103		5.80%	Y	
55	Records Research with Documentation, per Address	$147	$155	per address	5.80%	Y	
56	Report of Monthly or Yrly Bldg Permit Activity (no charge to public agencies)	$98	$103		5.80%	Y	
57	Reprinting of Building Permit Cards	$65	$69		5.80%	Y	
58	Alternative Materials or Methods of Construction	$724	$765		5.80%	Y	
	Other Plan Check and Inspection Permit Fees						
59	Inspection Investigation Fee (Construction w/o Permits, Per MMC)	100% of insp. Fee	100% of insp. Fee			N	
60	Reinspection Fee - per reinspection	$342	$362	per reinspection	5.80%	Y	
61	Demolition Permit	$561	$593		5.80%	Y	[a]
62	Revision / Deferred Submittal Plan Check - per hour	$241	$255	per hour	5.80%	Y	
63	Digitizing						
	a) Document Size up to 11"x17"						
	i) 1st 10 pages	$1	$1	each	0.00%	N	
	ii) Each additional page	0.50	0.50	each	0.00%	N	
	b) Document Size Larger than 11"x17"	$4	$4	per page	0.00%	N	
	Hourly Rates						
64	Hourly Rates - Normal Business Hours						
	a) Plan Check	$241	$255		5.80%	Y	
	b) Inspection	$228	$241		5.80%	Y	
65	Afterhours (Overtime) Hourly Rates						
	a) Plan Check	$289	$305		5.80%	Y	
	b) Inspection	$271	$287		5.80%	Y	
	Standard Permitting Fees						
66	Community Planning Fee - % of Building Permit	5.00%	5.00%		0.00%	N	
67	Technology Fee - % of Building Permit	3.80%	3.80%		0.00%	N	

City of Milpitas
BUILDING SAFETY AND HOUSING - MISCELLANEOUS

	Activity Description	FY 23/24 Fee	FY 24/25 Fee	Charge Basis	Percent Change	Y'rly Infl'tr	Note
	STATE FEES						
	Strong Motion Instrumentation and Seismic Hazard Mapping Fees: ***						
68	Category 1 - Residential - Min Fee = $0.50	Val. x 0.00013	Val. x 0.00013			N	
69	Category 2 - All Other Buildings - Min Fee = $0.50	Val. x 0.00028	Val. x 0.00028			N	
	Building Standards Administration Special Revolving Fund: ***						
70	Permit Valuation						
	a) $1-$25,000	$1	$1		0.00%	N	
	b) $25,001 - $50,000	$2	$2		0.00%	N	
	c) $50,001 - $75,000	$3	$3		0.00%	N	
	d) $75,001 - $100,000	$4	$4		0.00%	N	
	e) Every $25,000 or fraction thereof above $100,000	$1	$1		0.00%	N	
	ELECTRICAL						
71	Electrical Permit Issuance ****	$196	$207		5.80%	Y	
72	Plan Check Fee - (min. 1 hr) - per hour	$241	$255	per hour	5.80%	Y	
73	Receptacle Outlets, multiple on one circuit						
	a) First 20	$114	$121		5.80%	Y	
	b) Each additional 20	$95	$101		5.80%	Y	
74	Receptacles or Junction box, fed from dedicated circuit - each	$57	$60	each	5.80%	Y	
75	Switches, Dimmers, Occupancy sensors, Sensor Power Packs, etc.						
	a) First 20	$114	$121		5.80%	Y	
	b) Each additional 20	$95	$101		5.80%	Y	
76	Lighting Fixtures, Sockets						
	a) First 20	$114	$121		5.80%	Y	
	b) Each additional 20	$95	$101		5.80%	Y	
77	Track lighting with fixtures - per linear feet	$1.14	$1.21		5.80%	Y	
78	Pole/Platform-Mounted/Theatrical Fixtures - each	$57	$60	each	5.80%	Y	
79	Circuit Breaker Panel/Subpanel, Lighting Control Panel – each	$95	$101	each	5.80%	Y	
80	Residential Equipment, hardwired from dedicated circuit – each	$57	$60	each	5.80%	Y	
81	Commercial Equipment, hardwired from dedicated circuit – each	$95	$101	each	5.80%	Y	
82	Power pole for cubicles	$57	$60	each	5.80%	Y	

City of Milpitas
BUILDING SAFETY AND HOUSING - MISCELLANEOUS

	Activity Description	FY 23/24 Fee	FY 24/25 Fee	Charge Basis	Percent Change	Y'rly Infl'tr	Note
83	Generator						
	a) Portable	$114	$121	each	5.80%	Y	
	b) 10 kW or less	$114	$121	each	5.80%	Y	
	c) More than 10 kW	$171	$181	each	5.80%	Y	
84	Electrical vehicle charging station						
	a) Residential	$57	$60		5.80%	Y	
	b) Commercial	$95	$101		5.80%	Y	
85	HEPA filter						
	a) First 20	$114	$121		5.80%	Y	
	b) Each additional 20	$95	$101		5.80%	Y	
86	Time Clock	$57	$60	each	5.80%	Y	
87	Sign, lighting systems from one branch circuit						
	a) First one	$228	$241		5.80%	Y	
	b) Each additional	$114	$121		5.80%	Y	
88	Services						
	a) Not over 200 amps (new or change) – each	$114	$121	each	5.80%	Y	
	b) 201 amps - 1000 amps (new or change)	$228	$241	each	5.80%	Y	
	c) Over 1000 amperes (new or change)	$285	$302	each	5.80%	Y	
89	Power Apparatus (UPS) or Transformer	$95	$101	each	5.80%	Y	
90	Miscellaneous Apparatus, Conduits & Conductors	$95	$101	each	5.80%	Y	
91	Construction Temporary Power Pole with service panel, each pole	$114	$121		5.80%	Y	
92	Elevator	$228	$241	each	5.80%	Y	
93	Special Circuitry, per circuit	$95	$101	per circuit	5.80%	Y	
	MECHANICAL						
94	Mechanical Permit Issuance ****	$196	$207		5.80%	Y	
95	Plan Check Fee (min.1 hr)	$241	$255	per hour	5.80%	Y	
96	Install Furnace or Heater, Residential (not including duct work)	$152	$161		5.80%	Y	
97	Install, Relocate, Replace Flue Vent (not including with appliance)	$114	$121		5.80%	Y	
98	Install Hood with Mechanical Exhaust						
	a) Residential	$95	$101		5.80%	Y	
	b) Commercial	$228	$241		5.80%	Y	
99	Duct Work per VAV or Single Zone System	$95	$101		5.80%	Y	

City of Milpitas
BUILDING SAFETY AND HOUSING - MISCELLANEOUS

	Activity Description	FY 23/24 Fee	FY 24/25 Fee	Charge Basis	Percent Change	Y'rly Infl'tr	Note
100	Install Industrial-type Incinerator	$171	$181		5.80%	Y	
101	Install						
	a) Boiler (each)	$114	$121	each	5.80%	Y	
	b) Condenser, VAV or Fan Coil 0-5 ton <2000 CFM (each)	$114	$121	each	5.80%	Y	
	c) Condenser, VAV or Fan Coil Over 5 ton >2000 CFM (each)	$228	$241	each	5.80%	Y	
102	Roof-top HVAC package unit including duct work	$228	$241		5.80%	Y	
103	Dryer vent						
	a) Dryer vent, residential	$95	$101	each	5.80%	Y	
	b) Dryer vent, commercial	$228	$241	each	5.80%	Y	
104	Pump	$171	$181	each	5.80%	Y	
105	Install/Replace Fire or Fire/Smoke Dampers - 5 (or portion of)	$114	$121		5.80%	Y	
106	Non-portable Evaporative Cooler	$171	$181		5.80%	Y	
107	Single Bathroom Ventilation Fan and Duct	$95	$101		5.80%	Y	
108	Ventilation System, not HVAC	$114	$121		5.80%	Y	
109	Other Regulated Appliance	$171	$181		5.80%	Y	
110	Process Piping						
	a) Hazardous process piping system						
	i) First 4 outlets	$171	$181		5.80%	Y	
	ii) Over 4 outlets - per outlet	$95	$101	per outlet	5.80%	Y	
	b) Non-Hazardous process piping system						
	i) First 4 outlets	$171	$181		5.80%	Y	
	ii) Over 4 outlets - per outlet	$95	$101	per outlet	5.80%	Y	
	PLUMBING						
111	Plumbing Permit Issuance ****	$196	$207		5.80%	Y	
112	Plan Check Fee (min. 1 hr) - per hour	$241	$255	per hour	5.80%	Y	
113	Plumbing Fixtures						
	a) First 5 traps (or portion of)	$171	$181		5.80%	Y	
	b) Each Additional trap	$95	$101		5.80%	Y	
114	Building Drain or Sewer (New or Replacement)	$171	$181		5.80%	Y	
115	Rain Water Drainage System	$114	$121		5.80%	Y	
116	Water Heater and Vent	$171	$181		5.80%	Y	
117	Gas Piping System - (each appliance)	$114	$121		5.80%	Y	

City of Milpitas

BUILDING SAFETY AND HOUSING - MISCELLANEOUS

	Activity Description	FY 23/24 Fee	FY 24/25 Fee	Charge Basis	Percent Change	Y'rly Infl'tr	Note
118	Automatic Gas Shut-off Device (Seismic or Excess Flow) if not part of new gas piping system	$114	$121		5.80%	Y	
119	Industrial Waste Pre-Treatment System	$228	$241		5.80%	Y	
120	Grease Trap	$171	$181		5.80%	Y	
121	Grease Interceptor	$228	$241		5.80%	Y	
122	Water System Installation						
	a) New	$342	$362		5.80%	Y	
	b) Re-pipe	$228	$241		5.80%	Y	
123	Pump	$171	$181	each	5.80%	Y	
124	Repair/Alteration of Drain/Vent	$171	$181		5.80%	Y	
125	Landscape Sprinkler System	$171	$181		5.80%	Y	
126	Landscape Reclaim Water	$285	$302	per valve	5.80%	Y	
127	Backflow Protection						
	a) first 5	$171	$181		5.80%	Y	
	b) each additional 5 (or portion of)	$95	$101		5.80%	Y	
128	Reclaim Water System, No Irrigation	$342	$362		5.80%	Y	
129	Private Sewage Disposal System	$114	$121		5.80%	Y	

** Additional fees may be charged for roof penetrations and/or equipment installation.
*** Fees set by the State of California and are subject to change.

**** Permit issuance fee. When more than one specialty permit (electrical, mechanical, plumbing) is concurrently issued to one applicant, only one permit issuance fee will be charged.

***** Full permit fees of the main building permit shall be paid prior to issuance of the temporary building permit.
[a] 60% of the permit fee is considered inspection fee for the purpose of processing refund request and applying inspection investigation fee.

City of Milpitas

BUILDING SAFETY AND HOUSING - MOBILEHOME PERMIT

	Activity Description	FY 23/24 Fee	FY 24/25 Fee	Charge Basis	Percent Change	Y'rly Infl'tr	Note
	Mobilehome Permit Fees						
1	Permit Issuance Fee	$196	$207	each	5.80%	Y	
2	Permits with HCD Standard Plan Approval:	See Item A	See Item A	each	0.00%	N	
	a) Mobile Home (MH) Unit Installation (each)	$196 min.	$196 min.	each	0.00%	N	
	b) MH Unit Foundation System (each)	Table B	Table B	each	0.00%	N	
	c) Accessory building and structure, and building component (each)	Table B	Table B	each	0.00%	N	[a]
	d) Plumbing	Table C	Table C	each	0.00%	N	
	e) Mechanical	Table D	Table D	each	0.00%	N	
	f) Electrical	Table E	Table E	each	0.00%	N	
	g) Plan Review	N/A	N/A	each	0.00%	N	
3	Permits without HCD Standard Plan Approval:	See Item A	See Item A	each	0.00%	N	
	a) Accessory building and structure, and building component (each)	Table B	Table B	each	0.00%	N	[a]
	b) Plumbing	Table C	Table C	each	0.00%	N	
	c) Mechanical	Table D	Table D	each	0.00%	N	
	d) Electrical	Table E	Table E	each	0.00%	N	
	e) Plan Review						
	i) First submittal	1/2 of total permit fees	1/2 of total permit fees	each	0.00%	N	[b]
	ii) Each resubmittal						
	a) First Hour	$203	$203	each	0.00%	N	[b]
	b) Second and subsequent whole hour	$92	$92	each	0.00%	N	[b]
	c) Each 1/2 hour, or fractional part thereof	$46	$46	each	0.00%	N	[b]
	Item A						
4	Permit Fees						
	a) First Inspection:						
	i) First Hour	Sum of all categories ($196 min.)	Sum of all categories ($196 min.)	each	0.00%	N	
	ii) Second and subsequent whole hour	$82	$82	each	0.00%	N	
	iii) Each 1/2 hour, or fractional part thereof	$41	$41	each	0.00%	N	
	b) Re-Inspection (Each subsequent inspection)						
	i) First Hour	$178	$178	each	0.00%	N	
	ii) Second and subsequent whole hour	$82	$82	each	0.00%	N	
	iii) Each 1/2 hour, or fractional part thereof	$41	$41	each	0.00%	N	

City of Milpitas

BUILDING SAFETY AND HOUSING - MOBILEHOME PERMIT

	Activity Description	FY 23/24 Fee	FY 24/25 Fee	Charge Basis	Percent Change	Y'rly Infl'tr	Note
	Table B: Construction Permit Fee						
5	Total Valuation						
	a) Up to $2,000	$45.00	$45.00	each	0.00%	N	
	b) $2,001 - $25,000						
	i) Base fee for first $2,000	$45.00	$45.00	each	0.00%	N	
	ii) Fee for each additional $1,000 or fraction thereof, up to $25,000	$9.00	$9.00	each	0.00%	N	
	c) $25,001 - $50,000						
	i) Base fee for first $25,000	$252.00	$252.00	each	0.00%	N	
	ii) Fee for each additional $1,000 or fraction thereof, up to $50,000	$6.50	$6.50	each	0.00%	N	
	d) $50,001 - $100,000						
	i) Base fee for first $50,000	$414.50	$414.50	each	0.00%	N	
	ii) Fee for each additional $1,000 or fraction thereof, up to $100,000	$4.50	$4.50	each	0.00%	N	
	e) $100,001 - $500,000						
	i) Base fee for first $100,000	$639.50	$639.50	each	0.00%	N	
	ii) Fee for each additional $1,000 or fraction thereof, up to $500,000	$3.50	$3.50	each	0.00%	N	
	f) $500,001 - $1,000,000						
	i) Base fee for first $500,000	$2,039.50	$2,039.50	each	0.00%	N	
	ii) Fee for each additional $1,000 or fraction thereof, up to $1,000,000	$3.00	$3.00	each	0.00%	N	
	g) $1,000,001 and Greater						
	i) Base fee for first $1,000,000	$3,539.50	$3,539.50	each	0.00%	N	
	ii) Fee for each additional $1,000 or fraction thereof	$2.00	$2.00	each	0.00%	N	
	Table C: Plumbing Permit Fee						
6	Each plumbing fixture, trap, set of fixtures on one trap, including water, drainage piping and backflow protection thereof	$3.00	$3.00	each	0.00%	N	
7	Each building sewer	$14.00	$14.00	each	0.00%	N	
8	Each private sewage disposal system	$14.00	$14.00	each	0.00%	N	
9	Each water heater and/or vent	$7.00	$7.00	each	0.00%	N	
9	Each gas piping system for one to five outlets	$7.00	$7.00	each	0.00%	N	
10	Each gas piping system for six or more outlets, per outlet	$1.50	$1.50	each	0.00%	N	
11	Each gas regulator	$1.50	$1.50	each	0.00%	N	
12	Each water branch service outlet or outlets at the same location, or each fixture supply	$1.00	$1.00	each	0.00%	N	
13	Each installation of water treating equipment	$7.00	$7.00	each	0.00%	N	
14	Alteration or repair of water piping or water treating equipment	$7.00	$7.00	each	0.00%	N	
15	Alteration or repair of drainage or vent piping	$7.00	$7.00	each	0.00%	N	

City of Milpitas
BUILDING SAFETY AND HOUSING - MOBILEHOME PERMIT

	Activity Description	FY 23/24 Fee	FY 24/25 Fee	Charge Basis	Percent Change	Y'rly Infl'tr	Note
16	Each lawn sprinkler system on any one meter, including backflow protection devices	$7.00	$7.00	each	0.00%	N	
17	Vacuum breakers or backflow protective devices on tanks, vats, etc., or for installation on unprotected plumbing fixtures:						
	a) One to five	$7.00	$7.00	each	0.00%	N	
	b) Over five, each additional	$3.00	$3.00	each	0.00%	N	
	Table D: Mechanical Permit Fee						
18	The installation or relocation of each forced-air or gravity-type furnace or burner, including ducts and vents attached to such appliance, up to and including 100,000 Btu	$14.00	$14.00	each	0.00%	N	
19	The installation or relocation of each forced-air or gravity-type furnace or burner, including ducts and vents attached to such appliance over 100,000 Btu	$21.00	$21.00	each	0.00%	N	
20	The installation or relocation of each floor furnace, including vent	$7.00	$7.00	each	0.00%	N	
21	The installation or relocation of each suspended heater, recessed wall heater or floor-mounted unit heater	$7.00	$7.00	each	0.00%	N	
21	The installation, relocation or replacement of each appliance vent installed and not included in an appliance permit	$7.00	$7.00	each	0.00%	N	
22	The repair of, alteration of, or addition to each heating appliance, refrigeration unit, comfort cooling unit, absorption unit, or each comfort heating, cooling, absorption, or evaporative cooling system, including installation of controls	$14.00	$14.00	each	0.00%	N	
23	The installation or relocation of each boiler or compressor to and including three horsepower or each absorption system to and including 100,000 Btu	$14.00	$14.00	each	0.00%	N	
24	The installation or relocation of each boiler or compressor over three horsepower or each absorption system over 100,000 Btu	$21.00	$21.00	each	0.00%	N	
25	Each air handling unit, including ducts attached thereto	$7.00	$7.00	each	0.00%	N	
26	For each evaporative cooler other than portable type	$7.00	$7.00	each	0.00%	N	
27	For each vent fan connected to a single duct	$3.00	$3.00	each	0.00%	N	
28	For each vent ventilation system which is not a portion of any heating or air conditioning system authorized by a permit	$7.00	$7.00	each	0.00%	N	
29	Each installation of equipment regulated by this chapter for which no other fee is listed	$7.00	$7.00	each	0.00%	N	

City of Milpitas

BUILDING SAFETY AND HOUSING - MOBILEHOME PERMIT

	Activity Description	FY 23/24 Fee	FY 24/25 Fee	Charge Basis	Percent Change	Y'rly Infl'tr	Note
	Table E: Electrical Permit Fee						
30	Each wiring outlet where current is used or controlled, except services, sub-feeders and meter outlets	$0.35	$0.35	each	0.00%	N	
31	Each fixture, socket or other lamp holding device	$0.35	$0.35	each	0.00%	N	
32	Each motor of not more than 50 h.p.	$4.25	$4.25	each	0.00%	N	
33	Each motor of more than 50 h.p.	$10.50	$10.50	each	0.00%	N	
33	Each mercury arc lamp and equipment	$1.00	$1.00	each	0.00%	N	
34	Each range, water heater or clothes dryer installation	$7.00	$7.00	each	0.00%	N	
35	Each space heater or infrared heat installation	$1.50	$1.50	each	0.00%	N	
36	Each stationary cooking unit, oven, or space heater	$1.50	$1.50	each	0.00%	N	
37	Each garbage disposer, dishwasher, or fixed motor-operated appliance not exceeding ½ h.p.	$1.50	$1.50	each	0.00%	N	
38	Working light in buildings in course of construction or undergoing repairs, or where temporary lighting is to be used	$3.00	$3.00	each	0.00%	N	
39	Each incandescent electric sign	$1.50	$1.50	each	0.00%	N	
40	Electric signs or outline lighting, luminous gas type with: 1 to 4 transformers	$3.00	$3.00	each	0.00%	N	
41	Additional transformers, each	$0.35	$0.35	each	0.00%	N	
42	Each rectifier and synchronous converter, per kw.	$0.35	$0.35	each	0.00%	N	
43	Each additional circuit for a mobile home accessory building or structure or other electrical equipment	$1.50	$1.50	each	0.00%	N	
44	Each service:						
	a) 600 volts or less, not over 200-amperes	$7.00	$7.00	each	0.00%	N	
	b) 600 volts or less, over 200-amperes	$10.00	$10.00	each	0.00%	N	
	c) Over 600 volts	$14.00	$14.00	each	0.00%	N	
45	Each installation of equipment regulated by this chapter for which no other fee is listed	$7.00	$7.00	each	0.00%	N	

[a] Accessory buildings and structures, and building components includes but not limited to: awning; deck larger than 12 SF, cabana, ramada, private garage, fence over 6 ft. in height, windbreak over 6 ft. in height.

[b] Only one plan review fee will be charged for identical structures submitted in the same permit application.

City of Milpitas

BUILDING SAFETY AND HOUSING - NEIGHBORHOOD BEAUTIFICATION

	Activity Description	FY 23/24 Fee	FY 24/25 Fee	Percent Change	Y'rly Infl'tr	Note
1	1st Violation to Neighborhood Beautification Ordinance	$100	$100	0.00%	N	
2	2nd Violation to Neighborhood Beautification Ordinance	$200	$200	0.00%	N	
3	3rd or More Violations to Neighborhood Beautification Ordinance	$500	$500	0.00%	N	
4	Delinquency Penalty on Neighborhood Beautification Ordinance	$25	$25	0.00%	N	
5	Graffiti Abatement	Actual Cost	Actual Cost		N	
6	Public Nuisance Abatement	As defined in Municipal Code Sections	As defined in Municipal Code Sections		N	

City of Milpitas
ANIMAL REGULATION

	Activity Description	FY 23/24 Fee	FY 24/25 Fee	Charge Basis	Percent Change	Y'rly Infl'tr	Note
1	Animal Bites Penalty	$200	$200		0.00%	N	
2	Animal Impoundment Hearing	$50	$50		0.00%	N	
3	Animal Nuisance (e.g. barking)	$100	$100		0.00%	N	
4	Animals in Excess of Maximum Allowed Penalty	$50	$50		0.00%	N	
5	Failure to Apply for Annual Animal Facility Permit	$20	$20		0.00%	N	
6	Inadequate Control or Confinement of Potentially Dangerous Animal Penalty	$100	$100		0.00%	N	
7	Late Payments for Animal Fees	10%	10%	7 days	0.00%	N	
8	Unlicensed dog or cat penalty	$50	$50		0.00%	N	
9	Violation of Leash Law	$25	$25		0.00%	N	
10	Dog License						
	a) Altered	$25	$25		0.00%	N	
	b) Late Fee	$20	$20		0.00%	N	
	c) Unaltered	$65	$65		0.00%	N	
11	Cat License						
	a) Altered	$15	$15		0.00%	N	
	b) Late Fee	$20	$20		0.00%	N	
	c) Unaltered	$35	$35		0.00%	N	
12	Dog Seller Fee						
	a) 1st Permit within Calendar Year	$83	$88		5.80%	Y	
	b) 2nd Permit within Calendar Year	$166	$176		5.80%	Y	
13	Cat Seller Fee						
	a) 1st Permit within Calendar Year	$55	$59		5.80%	Y	
	b) 2nd Permit within Calendar Year	$111	$117		5.80%	Y	
14	Animal Disposal Fee	Actual Cost	Actual Cost			N	
15	Quarantining Animal Fee	Actual Cost	Actual Cost			N	
16	Redemption of Impounded Animal Fee	Actual Cost	Actual Cost			N	
17	Annual Animal Adoption Permit Fee	$55	$59		5.80%	Y	
18	Annual Animal Facility Permit Application Fee	$55	$59		5.80%	Y	
19	Dangerous Animal Annual Permit Fee	$166	$176		5.80%	Y	
20	Permit for Exception to Number or Type of Animals Allowed, Application Fee	$22	$23		5.80%	Y	
21	Other Requested/Required Services - See City of San Jose (The City of Milpitas contracts with the City of San Jose for various Animal Regulation services)	See City of San Jose fee schedule	See City of San Jose fee schedule			N	

City of Milpitas
PLANNING

	Activity Description	FY 23/24 Fee	FY 24/25 Fee	Percent Change	Y'rly Infl'tr	Note
	Special Events:					
1	Application ~~Fee~~ Type					
	a) Minor Events	$258	$273	5.80%	Y	[a]
	b) Regular Events	$1,007	$1,066	5.80%	Y	[a]
	c) Major Events	$6,289	$6,654	5.80%	Y	[a]
2	Conceptual Review - Planning Staff Only - per meeting	$386	$409	5.80%	Y	
	Pre-Application Review:					
3	Single Family Districts	$3,011	$3,186	5.80%	Y	
4	~~All Others~~ Multi-Family / Non-Residential	$9,594	$10,150	5.80%	Y	
	Tentative Maps:					
5	Parcel Map	$14,255	$15,082	5.80%	Y	
6	Tract Map	$20,673	$21,872	5.80%	Y	
	Minor Site Development:					
7	Over the Counter Review	$258	$273	5.80%	Y	
8	~~Staff Review Fee~~ Zoning Administrator					
	a) Staff Review - Zoning Administrator	$3,384	$3,580	5.80%	Y	
	b) Staff Review Hill Side - Zoning Administrator	$4,705	$4,978	5.80%	Y	
9	~~Requiring PC / CC Approval~~ Planning Commission / City Council	$9,882	$10,455	5.80%	Y	
	Site Development:					
10	~~New Development~~ Requiring PC / CC Approval	$18,927	$20,025	5.80%	Y	
11	Zoning Administrator	$14,636	$15,485	5.80%	Y	
12	SB35 Housing Project	$11,041	$11,681	5.80%	Y	
	Minor Conditional Use Permit:					
13	Staff Review - Zoning Administrator	$1,431	$1,514	5.80%	Y	
14	~~Requiring PC / CC Approval~~ Planning Commission / City Council	$3,232	$3,420	5.80%	Y	
15	Telecommunications	$1,008	$1,066	5.80%	Y	
	Conditional Use Permit:					
16	Single Family Districts	$695	$736	5.80%	Y	
17	Temporary Use Permit	$897	$949	5.80%	Y	
18	~~All Other CUPs~~ Multi-Family / Non-Residential	$16,078	$17,010	5.80%	Y	

City of Milpitas
PLANNING

	Activity Description	FY 23/24 Fee	FY 24/25 Fee	Percent Change	Y'rly Infl'tr	Note
	Signs:					
19	Temporary (Including Banners)	$121	$129	5.80%	Y	
20	Permanent (Including Wall Signs)	$352	$372	5.80%	Y	
21	Freestanding signs over 6ft in height	$595	$629	5.80%	Y	
	Variance:					
22	Single Family Districts	$1,058	$1,119	5.80%	Y	
23	Signs	$1,039	$1,099	5.80%	Y	
24	Multi-Family / Non-Residential	$3,258	$3,447	5.80%	Y	
	~~**Special Use Permit:**~~					
~~25~~	~~Staff Review~~	~~$1,008~~		~~z~~	~~Y~~	
~~26~~	~~Requiring PC / CC Approval~~	~~$2,581~~		~~3.50%~~	~~Y~~	
	Short-Term Rental ~~Permit~~					
25	Short-Term Rental ~~Permit~~ - Initial	$520	$550	5.80%	Y	
26	Short-Term Rental ~~Permit~~ - Renewal	$520	$550	5.80%	Y	
	Deposit-Based Fees:					
27	Amendments, General Plan, Zoning, or Specific Plan (Map or Text)	$20,000	$20,000	0.00%	N	
28	Development Agreements	$20,000	$20,000	0.00%	N	
29	Environmental Review/CEQA clearance	$35,000	$35,000	0.00%	N	
30	Planned Unit Development	$20,000	$20,000	0.00%	N	
31	Billboards	$2,500	$2,500	0.00%	N	
32	Initial Deposit to Offset Costs of Legal Review, Peer Review, Other Agency Review, etc.	$5,000	$5,000	0.00%	N	[b]
	Miscellaneous: ~~Fees:~~					
33	Amendments/Modifications to an Existing Permit					
	a) Permit Adjustment	25% of permit fee	25% of permit fee		N	
	b) Permit Amendment	50% of permit fee	50% of permit fee	0.00%	N	
34	Appeal To Planning Commission/City Council	$2,060	$2,179	5.80%	Y	
35	Time Extensions	$850	$899	5.80%	Y	
36	Public Noticing ~~Fee~~	$615	$615	0.00%	Y	
37	Copies - per page	$0.10	$0.10	0.00%	N	
38	Planning Research - per hour	$257	$272	5.80%	Y	
39	Zoning Conformance Letter	$243	$257	5.80%	Y	
40	Home Occupation Permit / Business License Review	$61	$64	5.80%	Y	
41	Tree Removal	$247	$261	5.80%	Y	

City of Milpitas
PLANNING

	Activity Description	FY 23/24 Fee	FY 24/25 Fee	Percent Change	Y'rly Infl'tr	Note
42	Building Plan Check ~~Support~~	$258	$273	5.80%	Y	
43	Building Inspection ~~Support~~	$258	$273	5.80%	Y	
44	Certificate of Occupancy Review	$129	$136	5.80%	Y	
45	Permit Compliance Review	$514	$544	5.80%	Y	
46	Letter of Determination / Interpretation	$1,029	$1,088	5.80%	Y	
47	Pass Through for Legal Fees	Pass - Through	Pass - Through		N	
48	Vendor Payment Processing Fees	Pass - Through	Pass - Through		N	[c]
49	Technology Fee - % of Permit	3.80%	3.80%	0.00%	N	

[a] Minor events are for permits issued over-the-counter for small private events. Regular events permits are typically issued for events less than four consecutive days, including block parties, or that require review by multiple departments. Major event permits are typically issued for events that exceed four consecutive days and/or anticipate crowds exceeding 1,000 people.

[b] This deposit will be collected in addition to any other deposits or fixed fees. Any unused deposit amounts will be returned to applicant.

[c] For payments made using vendor portal services, applicant shall be responsible for processing fees charged by vendor, as applicable.

* Applicants for full cost (deposit-based) submittals shall pay for all City staff and contract service provider time and materials required to process the application. Hourly rates for City staff time vary by position, as outlined in the City's full cost allocation plan.

City of Milpitas
ENGINEERING

	Activity Description	FY 23/24 Fee	FY 24/25 Fee	Percent Change	Y'rly Infl'tr	Note
1	Minor Encroachment Permit	$1,186	$1,255	5.80%	Y	
2	Lot Line / Merger Adjustment	$3,500	$3,703	5.80%	Y	[a]
3	Street / Alley Easement Vacation	$2,542	$2,690	5.80%	Y	
	Bldg Permit Reviews:					
4	Single Family New Building / Addition	$651	$689	5.80%	Y	
5	Commercial / Industrial New Building	$2,170	$2,296	5.80%	Y	
6	Commercial / Industrial Tenant Improvement	$217	$230	5.80%	Y	
7	Commercial / Industrial Site Improvement (including Grading)	$1,953	$2,066	5.80%	Y	
8	All Other Permit Application Reviews (per hour)	$217	$230	5.80%	Y	
	Engineering Plan Review: (Construction Cost Estimate)					
9	Up to $50,000	$5,542	$5,864	5.80%	Y	
10	$50,001-$200,000	$11,085	$11,728	5.80%	Y	
11	$200,001-$500,000	$16,627	$17,591	5.80%	Y	
12	Over $500,001	$22,169	$23,455	5.80%	Y	
	Engineering Inspection: (Construction Cost Estimate)					
13	Up to $50,000	$5,542	$5,864	5.80%	Y	
14	Greater than $50,000 - % of Construction Cost Estimate	10%	10%	0.00%	N	
15	Technology Fee - % of Permit	3.80%	3.80%	0.00%	N	

[a] Fee includes Planning and Engineering review.

City of Milpitas
PUBLIC WORKS

	Activity Description	FY 23/24 Fee / Rate	FY 24/25 Fee / Rate	Percent Change	Y'rly Infl'tr	Note
	Utilities					
1	Service Request and Basic Inspection	$136	$144	5.80%	Y	
2	Discontinuance of Service	$136	$144	5.80%	Y	
3	Meter Removal / Installation					
	a) Less than 2"	$110	$116	5.80%	Y	
	b) Greater than or Equal to 2"	$324	$343	5.80%	Y	
4	Water Meter Testing					
	a) Residential Deposit	$110	$110	0.00%	N	[a]
	b) Commercial Deposit	$300	$300	0.00%	N	[a]
5	Hydrant Flow Test					
	a) Two or Fewer Hydrants	$677	$716	5.80%	Y	
	b) Three Hydrants	$702	$743	5.80%	Y	
	c) Four Hydrants	$731	$774	5.80%	Y	
6	Sewer Lateral Inspection					
	a) Visual Inspection	$110	$116	5.80%	Y	
	b) Video Inspection - Residential	$477	$505	5.80%	Y	
	c) Video Inspection - Commercial	$714	$756	5.80%	Y	
7	Backflow Testing Fee	Actual Cost; per hour	Actual Cost; per hour			
8	Late Payment Penalty Fee (% of amount due)	5%	5%	0.00%	N	
9	Final Notice Penalty	5%	5%	0.00%	N	
10	Discontinuance of Service Warning Notice	$10	$10	0.00%	N	
11	Restoration Fee - During Normal Operating Hours					
	a) Low Income	$54	$56	3.67%	CPI	[b]
	b) All Others	$131	$138	5.80%	Y	
12	Restoration Fee - During Non-Operational Hours					
	a) Low Income	$163	$169	3.67%	CPI	[b]
	b) All Others	$344	$364	5.80%	Y	

Notes

[a] If meter is not accurate, deposit is refunded. If meter has been tampered with, the resident or business is charged for the repair.

[b] For residential customers who demonstrate to the City a household income below 200 percent of the federal poverty line, the City will limit any service restoration charges during normal operating hours to fifty dollars ($50), and during nonoperational hours to one hundred fifty dollars ($150) for 2020. The limits will only apply if the City's service restoration charges actually exceed these amounts. These limits are subject to an annual adjustment for changes in the Bureau of Labor Statistics' Consumer Price Index for All Urban Consumers (CPI-U) beginning January 1, 2021.

* The City's utility rate schedule is adopted separately. Beginning in Fiscal Year 2023/24 the City will consolidate the listing of utility rates into a separate schedule.

City of Milpitas
PUBLIC WORKS

	Activity Description	FY 23/24 Fee	FY 24/25 Fee	Percent Change	Y'rly Infl'tr	Note
	Public Sewers					
1	Delinquent Fees	varies	varies		N	[a]
2	Civil Penalties	varies	varies		N	[b]
3	Unmetered Wastes	varies	varies		N	[c]
4	Authority to Disconnect	varies	varies		N	[d]
5	Payment for Sewage Services	varies	varies		N	[e]
6	Inspection Fees	varies	varies		N	[f]
7	House Lateral Fee	varies	varies		N	[g]
8	Disbursements of Short Side Charges	varies	varies		N	[h]
	FOG and Stormwater Industrial/Commercial Violation					
9	First Citation	$500	$500	0.00%	N	[i]
10	Second Citation	$625	$625	0.00%	N	[i]
11	Third Citation	$750	$750	0.00%	N	[i]
	Water Service Charges					
12	Construction Water	$2,000	$2,000	0.00%	N	
13	Deposits for service	$150	$150	0.00%	N	

Notes

[a] See City of Milpitas Municipal Code Section VIII-2-5.33. Permit applications are due ninety (90) days prior to commencing discharge to the sanitary system or expiration of existing discharge permit. Any person who fails to file an application for a discharge permit prior to discharge shall be assessed a penalty for delinquent filing as follows: (1) Up to and including thirty (30) days delinquency, the penalty shall be fifty percent (50%) of the permit fee. More than thirty (30) days but less than one year delinquency, the penalty shall be one hundred percent (100%) of the permit fee. (3) More than one(1) year delinquency, the penalty shall be one thousand percent (1,000%) of the permit fee. (b) Such penalties shall be in addition to any other penalties or fines that may be levied, and in addition to any other remedies that the City may have with respect to the discharge.

[b] See City of Milpitas Municipal Code Section VIII-2-5.50. Any person who intentionally, accidentally, or negligently violates any provisions of this Chapter, any provision of any permit issued pursuant to this Chapter, or who intentionally, accidentally, or negligently discharges waste or wastewater which causes pollution, or violates any effluent limitation, national standard of performance, or national pretreatment or toxicity standard, shall be civilly liable to the City in a sum up to ten thousand dollars ($10,000) for the first day in which such violation occurs, up to twenty-five thousand dollars ($25,000) for the second day in which such violation occurs, and fifty thousand dollars ($50,000) for each additional day.

[c] See City of Milpitas Municipal Code Section VIII-2-6.02. Where rates are herein specified to be in accordance with the use of water, all such premises shall be separately metered. Where such metering is not provided, or for newly constructed units, the City shall make a reasonable estimate of the volume of water consumed to be used as a basis for sewer service charges.

[d] See City of Milpitas Municipal Code Section VIII-2-6.03. In the event of a failure to pay the charges as provided for sewage service, the City is authorized to disconnect sewer or water service, or both.

City of Milpitas
PUBLIC WORKS

Activity Description	FY 23/24 Fee	FY 24/25 Fee	Percent Change	Y'rly Infl'tr	Note
[e] See City of Milpitas Municipal Code Section VIII-2-6.04. All accounts are due and payable within fifteen (15) days of the date of the bill. Accounts shall become delinquent and a late fee equal to five percent (5%) of the amount due shall be imposed of a payment has not been received by 5:00 p.m. on the due date.					
[f] See City of Milpitas Municipal Code Section VIII-2-7.01. Each connector shall pay a fee to City for issuing of each permit, for the inspection of each house lateral, house sewer or side sewer, the sum of five dollars ($5). Where connector has on file with the City cash deposit for inspection of work, no inspection fee shall be required. In such case, all cost and expenses incurred by City in inspection of the connection shall be made from said deposit.					
[g] See City of Milpitas Municipal Code Section VIII-2-7.02. Before the issuance of a permit for the installation of a house lateral, connector shall pay City a fee which shall include the following: (A) An engineering charge to defray the cost of processing the permit application, which shall be an amount equal to forty cents ($0.40) times one-half the width of the street expressed in feet in which the house lateral is being constructed. (B) A short side charge shall be collected in all cases where the main or trunk to which connection is being made is located between the center line of the street and the property to be served. Said short side charge shall be an amount equal to four dollars and fifty cents ($4.50) times the distance in feet between the center line of the street and the main or trunk sewer to which the connection is being made. The purpose of this charge is to equalize connection cost for property on both sides of the street.					
[h] See City of Milpitas Municipal Code Section VIII-2-7.03. The City Council may disburse to connectors whose house laterals connect to a main or trunk sewer at a point beyond the center line of the street an amount equal to $4.50 times the distance in feet between the center of the street and the main or trunk sewer to which said connection was made.					
[i] See City of Milpitas Municipal Code Section XI-16-14. Any person who intentionally or negligently violates any provision of this Chapter or any provision of any permit or certificate issued pursuant to this Chapter shall be civilly liable to the city in a sum not to exceed $25,000.00 per day for each day in which such violation occurs.					

City of Milpitas
FIRE

	Activity Description	FY 23/24 Fee	FY 24/25 Fee	Charge Basis	Percent Change	Y'rly Infl'tr	Note
	FIRE INVESTIGATION/ENFORCEMENT/RESPONSE						
1	Emergency Response – Haz Mat Calls, Minimum 1-hr	HR(s) * hourly rate	HR(s) * hourly rate			N	
2	Response to DUI	HR(s) * hourly rate	HR(s) * hourly rate			N	
3	Non-Milpitas Response	HR(s) * hourly rate	HR(s) * hourly rate			N	
4	Response/Investigation Fee	HR(s) * hourly rate	HR(s) * hourly rate			N	
5	Referral Inspection (Life/Safety) 2 hrs minimum charge	HR(s) * hourly rate	HR(s) * hourly rate			N	
6	Referral Inspection (Haz Mat) 2 hrs minimum charge	HR(s) * hourly rate	HR(s) * hourly rate			N	
7	Fire Code Chapter 50 (Haz Mat) - Release Cleanup 2hrs minimum charge	HR(s) * hourly rate	HR(s) * hourly rate			N	
8	Enforcement Cost Recovery	HR(s) * hourly rate	HR(s) * hourly rate			N	
	FALSE ALARM						
9	False Alarm						
	a) First two in 12 month time-frame	no charge	no charge			N	
	b) 3rd occurrence	$300	$300		0.00%	N	
	c) 4th occurrence	$600	$600		0.00%	N	
	d) 5th or more	$900	$900		0.00%	N	
	MISCELLANEOUS						
10	Data input (HMBP/HMIS), Minimum of 2 hours	HR(s) * hourly rate	HR(s) * hourly rate			N	
11	Late fee – over 60 days	Collection Cost	Collection Cost			N	
12	Failure to obtain a permit	Double permit fee	Double permit fee			N	
13	Weed Abatement. Fee = (hrs * $/HR), minimum 1-hr	HR(s) * hourly rate	HR(s) * hourly rate			N	
14	Fire Watch, Fee = (hrs * hourly rate). Std. or OT rate	HR(s) * hourly rate	HR(s) * hourly rate			N	[a]
15	Pre-inspection (residential care facilities)	Per Code	Per Code			N	
16	Confined Space permits	HR(s) * hourly rate	HR(s) * hourly rate			N	
17	Electronic Archive, per permit	$25	$25		0.00%	N	
18	Use of Trailer	$60	$60	per hour	0.00%	N	
19	Administrative Fee	$70	$70	per hour	0.00%	N	
20	Instructor	Actual Cost	Actual Cost			N	
21	Fire Reports	$13	$13		0.00%	N	
22	Other Services Not Listed	HR(s) * hourly rate	HR(s) * hourly rate			N	

City of Milpitas
FIRE

	Activity Description	FY 23/24 Fee	FY 24/25 Fee	Charge Basis	Percent Change	Y'rly Infl'tr	Note
	FIRE PREVENTION						
	ANNUAL OPERATIONAL PERMITS						
23	A-1 Occupancy (theaters and other small viewing halls)	$1,264	$1,341		6.06%	Y	
24	A-2 Occupancy (Food & Drink Establishment)	$956	$1,013		6.06%	Y	
25	A-3 Occupancy (Worship, recreation, or amusement)	$956	$1,013		6.06%	Y	
26	A-4 & A-5 Occupancy (indoors or outdoors sport event structures)	$2,190	$2,322		6.06%	Y	
27	High Piled Storage	$1,264	$1,341		6.06%	Y	
28	Malls						
	a) Small (0 to 50,000 s.f.)	$941	$998		6.06%	Y	
	b) Medium (50,001 to 100,000 s.f.)	$1,573	$1,668		6.06%	Y	
	c) Large (over 100,000 s.f.)	$2,190	$2,322		6.06%	Y	
29	Combustible Dust Producing Facility	$632	$670		6.06%	Y	
30	Motels	$956	$1,013		6.06%	Y	
31	Hotels & Multi-Story Structures						
	a) <5 stories	$1,881	$1,995		6.06%	Y	
	b) 5+ stories - per floor	$316	$335		6.06%	Y	
32	Commercial Daycare						
	a) Small (<100 children or elderly)	$617	$654		6.06%	Y	
	b) Large (100+ children or elderly)	$1,234	$1,309		6.06%	Y	
33	Residential Daycare						
	a) Small Family Daycare (8 or fewer children)	$0	$0			N	
	b) Large Family Daycare (9-14 children)	$0	$0			N	
	c) Elderly Care (6 or fewer people)	$0	$0			N	
34	Small Apartments (3-4 units)	$310	$328		6.06%	Y	
35	Medium Apartments (5-15 units)	$1,234	$1,309		6.06%	Y	
36	Large Apartments (more than 15 units)	$1,851	$1,963		6.06%	Y	
37	Small Chemical User (Example: doctor/dentist, dry cleaner, photo shop, graphic design, print shop, automobile engine repair, propane, CO2 beverage dispensing system, battery systems, emergency generators, pools, etc.)	$647	$686		6.06%	Y	
38	Medium Chemical User (Example: automobile body shop, research and design, analytical labs, pool supplies, big-box retail stores)	$1,602	$1,700		6.06%	Y	
39	Large Chemical User (Semiconductor or similar facilities)	$2,528	$2,681		6.06%	Y	
40	Plating Shops	$1,911	$2,027		6.06%	Y	

City of Milpitas
FIRE

	Activity Description	FY 23/24 Fee	FY 24/25 Fee	Charge Basis	Percent Change	Y'rly Infl'tr	Note
41	Toxic Gas						
	a) Small Toxic Gas - Annual Monitoring Certification	$1,234	$1,309		6.06%	Y	
	b) Large Toxic Gas - Annual Monitoring Certification	$2,468	$2,618		6.06%	Y	
42	Mobile Fueling						
	a) Vendor	$1,602	$1,700		6.06%	Y	
	b) Site	$1,602	$1,700		6.06%	Y	
43	Underground Tanks	$972	$1,031		6.06%	Y	
44	Urban Runoff Inspections						
	a) Industrial	$647	$686		6.06%	Y	
	b) Restaurants (once every 2 years)	$647	$686		6.06%	Y	
45	Other Miscellaneous Annual Inspections Fee - per hour	HR(s) * hourly rate	HR(s) * hourly rate			N	
	CONSTRUCTION REVIEW / PERMIT / INSPECTION						
	Building Life / Safety:						
	Demolition Fees:						
46	Interior or Partial Building or Misc. Demolition	$618	$655		6.06%	Y	
47	Complete Building with or without Site Demolition	$928	$984		6.06%	Y	
48	Grading Fees: These are only assessed if permits are submitted separately to Building Department from new construction or remodel permits.						
	a) Less than 1 acre	$618	$655		6.06%	Y	
	b) 1-5 acres	$928	$984		6.06%	Y	
	c) Greater than 5 acres	$1,237	$1,312		6.06%	Y	
49	Site Improvement Fees: These are only assessed if permits are submitted separately to Building Department from new construction or remodel permits.						
	a) Less than 1 acre	$928	$984		6.06%	Y	
	b) 1-5 acres	$1,855	$1,967		6.06%	Y	
	c) Greater than 5 acres	$310	$328	per acre	6.06%	Y	
50	New Building – Shell:						
	a) Less than 5,000 sq. ft.	$928	$984		6.06%	Y	
	b) 5,000-25,000 sq. ft.	$1,855	$1,967		6.06%	Y	
	c) 25,000-50,000 sq. ft.	$2,783	$2,951		6.06%	Y	
	d) 50,000+ sq. ft. – per sq. ft.	$0.07	$0.07	per sq ft	6.06%	Y	

City of Milpitas
FIRE

	Activity Description	FY 23/24 Fee	FY 24/25 Fee	Charge Basis	Percent Change	Y'rly Infl'tr	Note
51	New Building – New Construction:						
	a) Less than 5,000 sq. ft.	$928	$984		6.06%	Y	
	b) 5,000-25,000 sq. ft.	$2,473	$2,623		6.06%	Y	
	c) 25,000-50,000 sq. ft.	$4,638	$4,919		6.06%	Y	
	d) 50,000+ sq. ft. – per sq. ft.	$0.10	$0.10	per sq ft	6.06%	Y	
52	Additions, Alterations, and Tenant Improvements:						
	a) Less than 5,000 sq. ft.	$589	$625		6.06%	Y	
	b) 5,000-25,000 sq. ft.	$2,328	$2,469		6.06%	Y	
	c) 25,000-50,000 sq. ft.	$4,348	$4,612		6.06%	Y	
	d) 50,000+ sq. ft. – per sq. ft.	$0.10	$0.10	per sq ft	6.06%	Y	
53	Missed Plan Check by Appointment	$310	$328		6.06%	Y	
54	Revision to Project Fee - per hour (min 1 hr)	HR(s) * hourly rate	HR(s) * hourly rate			N	
55	Tents, Canopies, or Membrane Structures:						
	a) 4 or less	$927	$983		6.06%	Y	
	b) 5+	$1,236	$1,311		6.06%	Y	
56	Temporary Assembly (Indoors or outdoors), with or w/out tent						
	a) Occupancy 50-299	$927	$983		6.06%	Y	
	b) Occupancy 300-999	$1,545	$1,638		6.06%	Y	
	c) Occupancy 1000+	$2,472	$2,622		6.06%	Y	
	Fire Extinguishing Systems: These are typically deferred submittals and reviewed and inspected after building plan submittals.						
57	Fire Service Underground:						
	a) New or Replace - each	$1,545	$1,638		6.06%	Y	
	b) Repairs	$618	$655		6.06%	Y	
58	Fire Sprinkler Systems:						
	a) Less than 2,000 sq. ft	$898	$952		6.06%	Y	
	b) 2,000+ sq. ft. – per sq. ft., fee = Base Fee + [(project sq. ft. - 2,000 sq. ft.) * per sq. ft. fee]	$0.23	$0.24		6.06%	Y	
59	Hood & Duct Systems – Each	$1,236	$1,311		6.06%	Y	
60	FM 2000 (under floor systems, etc.) each	$1,236	$1,311		6.06%	Y	
61	Other (deluge, foam, preaction, etc.) each	$1,236	$1,311		6.06%	Y	

City of Milpitas
FIRE

	Activity Description	FY 23/24 Fee	FY 24/25 Fee	Charge Basis	Percent Change	Y'rly Infl'tr	Note
	Fire Alarm Systems:						
62	Additions, Alterations, or Repairs: If more than 10 devices then the New Fire Alarm fee applies.						
	a) 1-5 Devices	$618	$655		6.06%	Y	
	b) 6-10 Devices	$1,236	$1,311		6.06%	Y	
63	New Fire Alarm:						
	a) Less than 5,000 sq. ft.	$1,236	$1,311		6.06%	Y	
	b) 5,000+ sq. ft. – per sq. ft., fee = Base Fee + [(project sq. ft. - 5,000 sq. ft.) * per sq. ft. fee]	$0.21	$0.22		6.06%	Y	
64	Hazardous Materials - Building Construction:						
	a) Small TI without process piping or tools. (Example: registration form, inert compressed gas system installations, CO2 for beverage, small auto repair or	$626	$664		6.06%	Y	
	b) Facility TI with process piping or tanks < 4,000 sq. ft. (Example: H or F Occupancy, Plating Facility, chemical bunker). Does not include tools (tool fee is	$1,240	$1,315		6.06%	Y	
	c) Facility TI with process piping or tanks > 4,000 sq. ft. (Example: H or F Occupancy, Plating Facility, chemical bunker). Does not include tools (tool fee is	$0.31	$0.33	per sq ft	6.06%	Y	
65	Tools with Hazardous Materials (Example: emergency generator, lift stations, aboveground tanks, treatment systems, battery module per 50KWh, propane system, large tank installations).						
	a) Up to Two Tools	$1,240	$1,315	up to 2 tools	6.06%	Y	
	b) Each Additional Tool	$465	$493	per tool	6.06%	Y	
66	Closure - process / tools	$943	$1,000	each	6.06%	Y	
67	Closure - Facility						
	a) Small TI without process piping or tools. (Example: registration form, inert compressed gas system installations, CO2 for beverage, small auto repair or	$626	$664		6.06%	Y	
	b) Facility TI with process piping or tanks < 4,000 sq. ft. (Example: H or F Occupancy, Plating Facility, chemical bunker). Tools included.	$1,240	$1,315		6.06%	Y	
	c) Facility TI with process piping or tanks > 4,000 sq. ft. (Example: H or F Occupancy, Plating Facility, chemical bunker). Tools included.	$0.31	$0.33	per sq ft	6.06%	Y	
68	Underground Tank Installation:						
	a) 4 Tank System or less	$5,642	$5,984		6.06%	Y	
	b) Each additional tank	$633	$672		6.06%	Y	
69	Underground Tank Removal:						
	a) 2 Tank System or Less	$2,519	$2,671		6.06%	Y	
	b) Each additional tank	$317	$336		6.06%	Y	

City of Milpitas
FIRE

	Activity Description	FY 23/24 Fee	FY 24/25 Fee	Charge Basis	Percent Change	Y'rly Infl'tr	Note
70	CERS & APSA - Fee no longer applicable						
	a) CERS - Fee no longer applicable	$0	$0			N	
	b) APSA - Fee no longer applicable	$0	$0			N	
	MISCELLANEOUS FEES:						
71	After Hours or Fast-Track Plan Check, Inspection - 3 hrs min at OT Rate	$1,089	$1,155		6.06%	Y	[a]
72	Alternate Materials & Methods Review	$1,122	$1,190		6.06%	Y	
73	New Occupancy (new business)						
	a) No Hazardous Materials	$310	$328		6.06%	Y	
	b) With Hazardous Materials	$617	$654		6.06%	Y	
74	Smoke Detectors Verifications (new owner)	$310	$328		6.06%	Y	
75	Title 19 5-year automatic fire sprinkler certification						
	a) Commercial, Industrial, Mixed Use, Hotel/Motel, Apartments, Condomimiums,						
	i. Building less than or equal to 50,000 sq. ft.	$619	$657		6.06%	Y	
	ii. Building over 50,000 sq. ft.						
	a) First 50,000 sq. ft.	$619	$657		6.06%	Y	
	b) Each additional 50,000 sq. ft. or fraction thereof	$310	$328		6.06%	Y	
	b) Townhome Buildings						
	i. Building less than or equal to 25,000 sq. ft.	$310	$328		6.06%	Y	
	ii. Building over 25,000 sq. ft.						
	a) First 25,000 sq. ft.	$310	$328		6.06%	Y	
	b) Each additional 25,000 sq. ft. or fraction thereof	$310	$328		6.06%	Y	
76	Failure to cancel a scheduled inspection 24 hrs. prior	$310	$328		6.06%	Y	
77	Temporary Certificate of Occupancy	$154	$164		6.06%	Y	
78	Standard Hourly Rate - per hour	$310	$328		6.06%	Y	
79	Overtime Hourly Fee - per hour	$363	$385		6.06%	Y	
80	Other activities not listed - per hour	$310	$328		6.06%	Y	
81	Additional Plan Review Time - Std. or OT per hr.	HR(s) * hourly rate	HR(s) * hourly rate			N	
82	Additional Inspection Time - Std. or OT per hr.	HR(s) * hourly rate	HR(s) * hourly rate			N	
83	Fire Department Technology Fee - % of permit	3.80%	3.80%		0.00%	N	
84	Emergency Response Mapping - new projects - per hour	$281	$298		6.06%	Y	

[a] Minimum 3 hours.

City of Milpitas
AMBULANCE

	Activity Description	FY 23/24 Fee	FY 24/25 Fee	Charge Basis	Percent Change	Y'rly Infl'tr	Note
	SERVICE FEES						
1	ALS-1 (Advanced Life Support)	$2,055.53	$2,055.53		0.00%	N	
2	ALS-2 (Advanced Life Support)	$2,055.53	$2,055.53		0.00%	N	
3	BLS	$1,644.43	$1,644.43		0.00%	N	
4	Mileage	$69.79	$69.79		0.00%	N	
5	Hourly Ambulance Standby	$260.13	$260.13		0.00%	N	
6	Hourly Paramedic – Individual	$130.06	$130.06		0.00%	N	
7	Hourly EMT – Individual	$86.71	$86.71		0.00%	N	
	EQUIPMENT/SUPPLIES						
8	Airway/Nasal	$39.97	$39.97		0.00%	N	
9	Airway/Oral	$21.80	$21.80		0.00%	N	
10	Bag Valve Mask	$132.62	$132.62		0.00%	N	
11	Bandage, Elastic	$10.72	$10.72		0.00%	N	
12	Bandages Triangular	$18.17	$18.17		0.00%	N	
13	Bed Pan	$18.17	$18.17		0.00%	N	
14	Blanket, Disposable	$43.60	$43.60		0.00%	N	
15	Blood Glucose Test	$36.34	$36.34		0.00%	N	
16	Burn Sheet	$67.22	$67.22		0.00%	N	
17	Cervical Collar	$130.81	$130.81		0.00%	N	
18	Cold/Hot Pack	$27.25	$27.25		0.00%	N	
19	Cpap Procedure	$563.19	$563.19		0.00%	N	
20	Defib Pads	$79.94	$79.94		0.00%	N	
21	Dressing - Major	$18.17	$18.17		0.00%	N	
22	Dressing - Minor	$18.17	$18.17		0.00%	N	
23	Ekg Electrodes	$34.52	$34.52		0.00%	N	
24	Ekg Monitor 12 Lead	$172.59	$172.59		0.00%	N	
25	Emesis Basin/Bag	$14.16	$14.16		0.00%	N	
26	Endotracheal Tube Introducer/Gum Elastic Bougie	$121.36	$121.36		0.00%	N	
27	Headbed Immobilizer	$30.88	$30.88		0.00%	N	
28	Hepa Mask	$45.42	$45.42		0.00%	N	
29	Hood, Spit Sock	$29.91	$29.91		0.00%	N	
30	Intravenous Saline Lock	$95.65	$95.65		0.00%	N	
31	Intravenous Infusion Set	$161.69	$161.69		0.00%	N	
32	Intravenous Start Kit	$72.69	$72.69		0.00%	N	

City of Milpitas
AMBULANCE

	Activity Description	FY 23/24 Fee	FY 24/25 Fee	Charge Basis	Percent Change	Y'rly Infl'tr	Note
33	Intubation Supplies	$81.75	$81.75		0.00%	N	
34	IO Supplies	$541.39	$541.39		0.00%	N	
35	King Vision Video Larynoscope Channel Blade	$30.05	$30.05		0.00%	N	
36	Lma Supreme - Supraglottic Airway	$36.06	$36.06		0.00%	N	
37	Meconium Aspirator	$16.15	$16.15		0.00%	N	
38	Nebulizer	$85.39	$85.39		0.00%	N	
39	Non-Rebreather Mask	$19.98	$19.98		0.00%	N	
40	O2 Cannula With End-Tidal	$61.72	$61.72		0.00%	N	
41	O2 Mask/Cannula	$41.79	$41.79		0.00%	N	
42	OB Pack	$145.34	$145.34		0.00%	N	
43	Patient Mover	$58.31	$58.31		0.00%	N	
44	Plueral Decompression	$123.62	$123.62		0.00%	N	
45	Pulse Oximetry	$76.30	$76.30		0.00%	N	
46	Razor, Disposable	$1.51	$1.51		0.00%	N	
47	Splint Arm	$27.25	$27.25		0.00%	N	
48	Splint Leg	$27.25	$27.25		0.00%	N	
49	Splinting (Extremity)	$130.81	$130.81		0.00%	N	
50	Strap, 5 Foot Immobization	$20.10	$20.10		0.00%	N	
51	Suction Tube	$56.32	$56.32		0.00%	N	
52	Suctioning	$114.46	$114.46		0.00%	N	
53	Temperature Measurement	$30.67	$30.67		0.00%	N	
54	Tourniquet, Combat	$109.23	$109.23		0.00%	N	
55	Universal Precautions	$50.87	$50.87		0.00%	N	
56	Urinal	$18.17	$18.17		0.00%	N	

City of Milpitas
AMBULANCE

	Activity Description	FY 23/24 Fee	FY 24/25 Fee	Charge Basis	Percent Change	Y'rly Infl'tr	Note
	MEDICATIONS						
57	Acetaminophen (Ofirmev)	$219.96	$219.96		0.00%	N	
58	Activated Charcoal	$36.92	$36.92		0.00%	N	
59	Adenosine	$105.37	$105.37		0.00%	N	
60	Albuterol	$43.60	$43.60		0.00%	N	
61	Amiodarone	$70.08	$70.08		0.00%	N	
62	Asprin	$10.90	$10.90		0.00%	N	
63	Atrophine	$30.88	$30.88		0.00%	N	
64	Atrophine High Dose	$145.69	$145.69		0.00%	N	
65	Benadryl	$30.88	$30.88		0.00%	N	
66	Calcium Chloride	$30.88	$30.88		0.00%	N	
67	Dextrose 10% 25G In 250Ml Bag	$44.03	$44.03		0.00%	N	
68	Dopamine Drip	$98.10	$98.10		0.00%	N	
69	Duodote Autoinjector	$91.29	$91.29		0.00%	N	
70	Epi 1:1,000 1Mg/1Cc	$50.87	$50.87		0.00%	N	
71	Epi 1:10,000	$50.87	$50.87		0.00%	N	
72	Glucagon	$517.78	$517.78		0.00%	N	
73	Glucose Paste	$15.82	$15.82		0.00%	N	
74	Lidocaine 2%	$39.97	$39.97		0.00%	N	
75	Midazolem	$2.89	$2.89		0.00%	N	
76	Morphine	$30.88	$30.88		0.00%	N	
77	Narcan	$58.14	$58.14		0.00%	N	
78	Nitroglycerin Tablet	$1.55	$1.55		0.00%	N	
79	Nitropaste	$14.15	$14.15		0.00%	N	
80	Normal Saline Flush Pls 10Cc	$27.16	$27.16		0.00%	N	
81	Normal Saline 1000Cc	$176.23	$176.23		0.00%	N	
82	Ondansetron Injectable	$63.22	$63.22		0.00%	N	
83	Ondansetron Oral Dissolving Tablet	$52.21	$52.21		0.00%	N	
84	Sodium Bicarb	$54.50	$54.50		0.00%	N	
85	Sterile Water	$43.60	$43.60		0.00%	N	
86	Tranexamic Acid 1,000mg	$10.37	$10.37		0.00%	N	

* These fees are intended to mirror fees authorized by the Santa Clara County Emergency Services Agency. If Santa Clara County EMS updates fees subsequent to the adoption of this schedule, this schedule shall be presumed to reflect updated amounts. In the case of discrepancies, fee amounts authorized by Santa Clara County EMS shall supersede the amounts listed above. The City will periodically examine costs to ensure that fees collected do not exceed the City's program costs of service.

City of Milpitas
POLICE

	Activity Description	FY 23/24 Fee	FY 24/25 Fee	Charge Basis	Percent Change	Y'rly Infl'tr	Note
	Citations						
1	Citation Sign off for Non Milpitas Residents	$20	$20		0.00%	N	
2	Parking Citations	$65 - $280	$65 - $280		0.00%	N	[a]
3	Copy of Traffic & Parking citations	$5	$5		0.00%	N	
	Alarm Fees and Fines						
4	Alarm Permit						
	a) Alarm Permit - Initial	$44	$46	per year	6.06%	Y	[b]
	b) Alarm Permit - Renewal	$22	$23	per year	6.06%	Y	[b]
	c) Alarm Permit - Late Filing Fee	50% of permit fee	50% of permit fee			N	
5	False Alarm Response (per calendar year)						
	a) First	No Charge	No Charge			N	
	b) Second	No Charge	No Charge			N	
	c) Third	$82	$87		6.06%	Y	
	d) Fourth	$136	$144		6.06%	Y	
	e) Fifth	$272	$289		6.06%	Y	
	f) Sixth or More	$272	$289	per response	6.06%	Y	
6	False Alarm Response - Additional Fee for Unregistered Alarm	$27	$29	per response	6.06%	Y	
	Concealed Weapon Permit						
7	Concealed Weapon Permit						
	a) Initial Application	$330	$330		0.00%	N	[c]
	b) Renewal Application	$25	$25		0.00%	N	[c]
	c) Psychological Testing	$150	Actual Cost			N	[c]
	d) Modification of Permit	$10	$10		0.00%	N	[c]

City of Milpitas
POLICE

	Activity Description	FY 23/24 Fee	FY 24/25 Fee	Charge Basis	Percent Change	Y'rly Infl'tr	Note
	Miscellaneous						
8	Fingerprints						
	a) Ink Card Up to (2) Cards	$25	$25		0.00%	N	
	b) Ink Card Over (2) Cards	$5	$5	Each Additional Card	0.00%	N	
	c) Live Scan plus DOJ and FBI fees	$25	$25		0.00%	N	
9	Subpoenas						
	a) Officer	$275	$275		0.00%	N	
	b) Records	$15	$15		0.00%	N	
10	Administrative Tow Fees						
	a) Impound	$346	$346		0.00%	N	
	b) Stored	$50	$50		0.00%	N	
11	Repossession Fee	$15	$15		0.00%	N	
12	Incident (Log Event) Reports	$5	$5		0.00%	N	
13	Photos on CD / Digital Media	$15	$15		0.00%	N	
14	Police Reports						
	a) Up to (10) Pages	$13	$13		0.00%	N	
	b) Police Reports Over (10) Pages	$1	$1	per page	0.00%	N	
15	US Investigative Request for Law Enforcement Data	$15	$15		0.00%	N	
16	Videos / Digital Reproduction	:d in 15 minute increment:	Actual Cost billed in 15 minute increments; $50 minimum			N	[d]
17	Massage Permits	$1,000	$1,000		0.00%	N	

[a] Amounts vary depending on citation type.
[b] Alarm permits are issued per calendar year. Permits will expire annually on December 31st.
[c] Additional fees may apply (e.g., other agency fees, fingerprinting, background testing, firearm training, etc.).
[d] For requests requiring special programming or formatting the City will recover actual costs, including a pass-through of any vendor costs incurred.

City of Milpitas
RECREATION

Legend for Recreation Fees:

Priority II= Milpitas Public Schools, Chamber, and Gov. Agencies; Priority III= Resident Non-Profits; Priority IV= Milpitas Residents; Priority V= Non-Resident

	Activity Description	FY 23/24 Fee	FY 24/25 Fee	Charge Basis	Percent Change	Y'rly Infl'tr	Note
	ADULT RECREATION						
	Adult Sports Enrichment Fees						
1	Sports League (full season)						
	a) per team	$545 - $775	$545 - $775	per season	varies	Y	
	b) Additional fee per non-resident player	$11	$11	per season	0%	Y	
	AQUATICS						
2	Recreational Swim	$3 - $8	$3 - $8	per person	varies	Y	
3	Swimming Lessons Group						
	a) Residents	$85 - $116	$85 - $116	per session	varies	Y	
4	Private Swimming Lessons						
	a) Residents	$40 - $50	$40 - $50	per half hour lesson	varies	Y	
~~5~~	~~Parent-Tot Drop-in swim pass~~						
	~~a) Residents~~	~~$17~~	~~$17~~	~~per 5 visits~~	~~0%~~	~~Y~~	
	ARTS & CULTURE PROGRAMS						
5	Cultural Facilities Entrance Fee	$0 - $20	$0 - $20	per person		Y	
6	Cultural Event Activity Fee	$0 - $20	$0 - $20	per person		Y	
7	Busker Fee	$0 - $20	$0 - $20	per event		Y	
8	Artisan/Cottage Vendor Fee	$25 - $105	$25 - $105	per event		Y	
9	Theatre Audition/Cast Fee						
	a) Residents	$0 - $138	$0 - $138	per production		Y	
10	Theatre Entrance Fees						
	a) General Production	$0 - $20	$0 - $20	per person		Y	
	b) Special Production	$0 - $50	$0 - $50	per person		Y	
11	**CONTRACT CLASSES / PROGRAMS**	Instructor: Negotiated Rate	Instructor: Negotiated Rate			N	

City of Milpitas
RECREATION

Legend for Recreation Fees:

Priority II= Milpitas Public Schools, Chamber, and Gov. Agencies; Priority III= Resident Non-Profits; Priority IV= Milpitas Residents; Priority V= Non-Resident

	Activity Description	FY 23/24 Fee	FY 24/25 Fee	Charge Basis	Percent Change	Y'rly Infl'tr	Note
	MEMBERSHIP						
12	**Senior Center Membership**						
	a) Residents	$14 - $18	$14 - $18	per year		Y	
	b) Non-Resident	$33	$33	per year	0%	Y	
	Sports Center Membership						
13	Fitness Passes- Per Visit Packages						
	a) 5 visits	$27	$27	per package	0%	Y	
	b) 10 visits	$54	$54	per package	0%	Y	
	c) 15 visits	$81	$81	per package	typo - adjust	Y	
	d) 20 visits	$108	$108	per package	typo - adjust	Y	
14	Fitness Passes Senior (50+)- Per Visit Packages						
	a) 5 visits	$17	$17	per package	0%	Y	
	b) 10 visits	$34	$34	per package	0%	Y	
	c) 15 visits	$51	$51	per package	typo - adjust	Y	
	d) 20 visits	$68	$68	per package	typo - adjust	Y	
15	Drop-In Fee	$8 - $14	$8 - $14	per package	varies	Y	
16	Sports Center Unlimited Packages						
	a) Monthly	$70	$70	per package	0%	Y	
	b) 3 Months	$210	$210	per package	0%	Y	
	c) 6 Months	$310	$310	per package	0%	Y	
	d) 12 Months	$510	$510	per package	0%	Y	
17	Sports Center Unlimited Packages - Senior (50+)						
	a) Monthly	$40	$40	per package	0%	Y	
	b) 3 Months	$95	$95	per package	0%	Y	
	c) 6 Months	$145	$145	per package	0%	Y	
	d) 12 Months	$255	$255	per package	0%	Y	
~~18~~	~~Annual Non-Resident Fee~~	~~$55 - $109~~	~~$55 - $109~~	~~per year~~	~~varies~~	~~Y~~	
18	Fitness Passes-Per Visit Packages - Non Resident						
	5 visits - Non Resident	n/a	$32	per package		Y	
	10 visits - Non Resident	n/a	$64	per package		Y	
	15 visits - Non Resident	n/a	$96	per package		Y	
	20 visits - Non Resident	n/a	$128	per package		Y	

City of Milpitas
RECREATION

Legend for Recreation Fees:

Priority II= Milpitas Public Schools, Chamber, and Gov. Agencies; Priority III= Resident Non-Profits; Priority IV= Milpitas Residents; Priority V= Non-Resident

	Activity Description	FY 23/24 Fee	FY 24/25 Fee	Charge Basis	Percent Change	Y'rly Infl'tr	Note
19	Fitness Passes Senior (50+)-Per Visit Packages						
	5 visits - Non Resident	n/a	$22	per package		Y	
	10 visits - Non Resident	n/a	$44	per package		Y	
	15 visits - Non Resident	n/a	$66	per package		Y	
	20 visits - Non Resident	n/a	$88	per package		Y	
20	Sports Center Unlimited Packages						
	Monthly - Non Resident	n/a	$80	per package		Y	
	3 Months - Non Resident	n/a	$238	per package		Y	
	6 Months - Non Resident	n/a	$362	per package		Y	
	12 Months - Non Resident	n/a	$611	per package		Y	
21	Sports Center Unlimited Packages-Senior (50+)						
	Monthly - Non Resident	n/a	$49	per package		Y	
	3 Months - Non Resident	n/a	$119	per package		Y	
	6 Months - Non Resident	n/a	$191	per package		Y	
	12 Months - Non Resident	n/a	$347	per package		Y	
	Artificial Turf Field						
22	Deposit (Football/Soccer)						
	a) Priority II & III	n/a	n/a		0%	N	
	b) Priority IV & V	$1,000	$1,000		0%	N	
23	Deposit (Soccer/Volleyball)						
	a) Priority II & III	n/a	n/a		0%	N	
	b) Priority IV & V	$750	$750		0%	N	
24	Artificial Turf Football/Soccer w/o lights						
	a) Priority II & III	n/a	n/a		0%	N	
	b) Priority IV	$155	$155	per hour	0%	N	
	c) Priority V	$310	$310	per hour	0%	N	
25	Artificial Turf Football/Soccer w/ lights						
	a) Priority II & III	n/a	n/a		0%	N	
	b) Priority IV	$165	$165	per hour	0%	N	
	c) Priority V	$330	$330	per hour	0%	N	

City of Milpitas
RECREATION

Legend for Recreation Fees:

Priority II= Milpitas Public Schools, Chamber, and Gov. Agencies; Priority III= Resident Non-Profits; Priority IV= Milpitas Residents; Priority V= Non-Resident

	Activity Description	FY 23/24 Fee	FY 24/25 Fee	Charge Basis	Percent Change	Y'rly Infl'tr	Note
26	Artificial Turf Volleyball/Soccer w/o lights						
	a) Priority II & III	n/a	n/a		0%	N	
	b) Priority IV	$105	$105	per hour	0%	N	
	c) Priority V	$210	$210	per hour	0%	N	
27	Artificial Turf Volleyball/Soccer w/ lights						
	a) Priority II & III	n/a	n/a		0%	N	
	b) Priority IV	$115	$115	per hour	0%	N	
	c) Priority V	$230	$230	per hour	0%	N	
28	Tournament: Field w/o lights (Football)						
	a) Priority II & III	n/a	n/a		0%	N	
	b) Priority IV	$220	$220	per hour	0%	N	
	c) Priority V	$330	$330	per hour	0%	N	
29	Tournament: Field w/ lights (Football)						
	a) Priority II & III	n/a	n/a		0%	N	
	b) Priority IV	$230	$230	per hour	0%	N	
	c) Priority V	$345	$345	per hour	0%	N	
30	Tournament: Field w/o lights (Small)						
	a) Priority II & III	n/a	n/a		0%	N	
	b) Priority IV	$165	$165	per hour	0%	N	
	c) Priority V	$248	$248	per hour	0%	N	
31	Tournament: Field w/ lights (Small)						
	a) Priority II & III	n/a	n/a		0%	N	
	b) Priority IV	$175	$175	per hour	0%	N	
	c) Priority V	$263	$263	per hour	0%	N	
	Community Center Rentals						
32	Application Fee (non-refundable)	$21 - $31	$21 - $31	per rental	0%	N	
33	Rental Deposits: Classroom/Conference Room	$200	$200	per rental	0%	N	
34	Rental Deposits: Auditorium	$500	$500	per rental	0%	N	
35	Rental Deposits: Auditorium Screen	$250	$250	per rental	0%	N	

City of Milpitas
RECREATION

Legend for Recreation Fees:

Priority II= Milpitas Public Schools, Chamber, and Gov. Agencies; Priority III= Resident Non-Profits; Priority IV= Milpitas Residents; Priority V= Non-Resident

	Activity Description	FY 23/24 Fee	FY 24/25 Fee	Charge Basis	Percent Change	Y'rly Infl'tr	Note
36	Auditorium (3 hr. minimum)						
	a) Priority II	no fee	no fee		0%	N	
	b) Priority III	$105	$105	per hour	0%	N	
	c) Priority IV	$210	$210	per hour	0%	N	
	d) Priority V	$270	$270	per hour	0%	N	
37	Conference Room (2 hr. minimum)						
	a) Priority II	no fee	no fee		0%	N	
	b) Priority III	$37	$37	per hour	0%	N	
	c) Priority IV	$74	$74	per hour	0%	N	
	d) Priority V	$134	$134	per hour	0%	N	
38	Dance Studio. Craft Classroom (2 hr. minimum)						
	a) Priority II	no fee	no fee		0%	N	
	b) Priority III	$21	$21	per hour	0%	N	
	c) Priority IV	$42	$42	per hour	0%	N	
	d) Priority V	$102	$102	per hour	0%	N	
39	Facility Attendant Fees						
	a) Priority II,III, IV	$31	$31	per hour	0%	N	
	b) Priority V	$62	$62	per hour	0%	N	
40	Piano						
	a) Priority III, IV	$21	$21	per day	0%	N	
	b) Priority V	$84	$84	per day	0%	N	
41	Auditorium Sound System (includes staff time)	$53	$53	per hour	0%	N	
	Field Rentals						
42	Application Fee (non-refundable)	$21 - $31	$21 - $31		0%	N	[a]
43	Rental Deposits						
	a) Priority II & III	n/a	n/a		0%	N	
	b) Priority IV & V	$750	$750		0%	N	
44	Cricket Pitch						
	a) Priority II & III	n/a	n/a		0%	N	
	b) Priority IV	$31	$31	per hour	0%	N	
	c) Priority V	$62	$62	per hour	0%	N	

City of Milpitas
RECREATION

Legend for Recreation Fees:

Priority II= Milpitas Public Schools, Chamber, and Gov. Agencies; Priority III= Resident Non-Profits; Priority IV= Milpitas Residents; Priority V= Non-Resident

	Activity Description	FY 23/24 Fee	FY 24/25 Fee	Charge Basis	Percent Change	Y'rly Infl'tr	Note
45	Soccer Field w/o lights (2hr. Minimum)						
	a) Priority II & III	n/a	n/a		0%	N	
	b) Priority IV	$31	$31	per hour	0%	N	
	c) Priority V	$62	$62	per hour	0%	N	
46	Soccer Field w/ lights (2hr. Minimum)						
	a) Priority II & III	n/a	n/a		0%	N	
	b) Priority IV	$42	$42	per hour	0%	N	
	c) Priority V	$84	$84	per hour	0%	N	
47	Softball/ Baseball Field w/o lights (2hr minimum)						
	a) Priority II & III	n/a	n/a		0%	N	
	b) Priority IV	$21	$21	per hour	0%	N	
	c) Priority V	$42	$42	per hour	0%	N	
48	Softball/ Baseball Field w/ lights (2hr minimum)						
	a) Priority II & III	n/a	n/a		0%	N	
	b) Priority IV	$31	$31	per hour	0%	N	
	c) Priority V	$62	$62	per hour	0%	N	
49	Tournaments: Field w/o lights						
	a) Priority II & III	n/a	n/a		0%	N	
	b) Priority IV	$63	$63	per hour	0%	N	
	c) Priority V	$126	$126	per hour	0%	N	
50	Tournaments: Field w/ lights						
	a) Priority II & III	n/a	n/a		0%	N	
	b) Priority IV	$83	$83	per hour	0%	N	
	c) Priority V	$166	$166	per hour	0%	N	
	Gym, Courts & Pool Rentals						
51	Application Fee (non-refundable)	$21 - $31	$21 - $31		0%	N	
52	Rental Deposit						
	a) Priority II & III	n/a	n/a		0%	N	
	b) Priority IV & V	$750	$750		0%	N	

City of Milpitas
RECREATION

Legend for Recreation Fees:

Priority II= Milpitas Public Schools, Chamber, and Gov. Agencies; Priority III= Resident Non-Profits; Priority IV= Milpitas Residents; Priority V= Non-Resident

	Activity Description	FY 23/24 Fee	FY 24/25 Fee	Charge Basis	Percent Change	Y'rly Infl'tr	Note
53	Large Gymnasium (3 hr. minimum)						
	a) Priority II & III	n/a	n/a		0%	N	
	b) Priority IV	$85	$85		0%	N	
	c) Priority V	$170	$170		0%	N	
54	MSC Dance Studio (2 hr. minimum)						
	a) Priority II	no fee	no fee		0%	N	
	b) Priority III	$21	$21	per hour	0%	N	
	c) Priority IV	$42	$42	per hour	0%	N	
	d) Priority V	$102	$102	per hour	0%	N	
55	Tournaments: Large Gymnasium (3 hr. Minimum)						
	a) Priority II & III	n/a	n/a		0%	N	
	b) Priority IV	$145	$145		0%	N	
	c) Priority V	$225	$225		0%	N	
56	Training Pool (2hr. minimum)						
	a) Priority II & III	n/a	n/a		0%	N	
	b) Priority IV	$52	$54-$74	per hr + 2 guards	4%	N	
	c) Priority V	$104	$108 - $128	per hr + 2 guards	4%	N	
57	Yard Pool (2 hr. minimum)						
	a) Priority II & III	n/a	n/a		0%	N	
	b) Priority IV	$65	$67-$87	per hr + 2 guards	4%	N	
	c) Priority V	$130	$135 - $155	per hr + 2 guards	4%	N	
58	Meter Pool (2 hr. minimum)						
	a) Priority II & III	n/a	n/a		0%	N	
	b) Priority IV	$75	$78-$98	per hr + 2 guards	4%	N	
	c) Priority V	$150	$155-$175	per hr + 2 guards	4%	N	
59	Facility Attendant/Scorekeeper (per attendant)						[a]
	a) Priority II & IV	$31	$31	per hour	0%	N	
	b) Priority V	$62	$62	per hour	0%	N	
60	Lifeguard Fees (per Lifeguard)						[a]
	a) Priority II & IV	$20	$20	per hour	0%	N	
	b) Priority V	$40	$40	per hour	0%	N	

City of Milpitas
RECREATION

Legend for Recreation Fees:

Priority II= Milpitas Public Schools, Chamber, and Gov. Agencies; Priority III= Resident Non-Profits; Priority IV= Milpitas Residents; Priority V= Non-Resident

	Activity Description	FY 23/24 Fee	FY 24/25 Fee	Charge Basis	Percent Change	Y'rly Infl'tr	Note
	Higuera Adobe						
61	Application Fee (non-refundable)	$21 - $31	$21 - $31		0%	N	[b]
62	Rental Deposit	$500	$500		0%	N	[b]
63	Auditorium (3hr. Minimum)						
	a) Priority II	no fee	no fee		0%	N	
	b) Priority III	$52	$52	per hour	0%	N	
	c) Priority IV	$104	$104	per hour	0%	N	
	d) Priority V	$164	$164	per hour	0%	N	
64	Facility Attendant Fees (per attendant)						
	a) Priority II, III, & IV	$31	$31	per hour	0%	N	
	b) Priority V	$62	$62	per hour	0%	N	
	City Hall						
65	Application Fee (non-refundable)	$30	$30	per rental	0%	N	
66	Rental Deposit	$500	$500		0%	N	[b]
67	City Hall Rotunda (2 hr. minimum)						
	a) Priority II	no fee	no fee		0%	N	
	b) Priority III	$40	$40	per hour	0%	N	
	c) Priority IV	$80	$80	per hour	0%	N	
	d) Priority V	$160	$160	per hour	0%	N	
68	City Hall City Council Chambers (2 hr. minimum)						
	a) Priority II	no fee	no fee		0%	N	
	b) Priority III	$78	$78	per hour	0%	N	
	c) Priority IV	$260	$260	per hour	0%	N	
	d) Priority V	$520	$520	per hour	0%	N	
69	City Hall Veterans Plaza (2 hr. minimum)						
	a) Priority II	no fee	no fee			N	
	b) Priority III	$40	$40	per hour	0%	N	
	c) Priority IV	$80	$80	per hour	0%	N	
	d) Priority V	$160	$160	per hour	0%	N	
70	Staff/hour - Maintenance and/or IT (per attendent / per staff member)	$50	$50	per hour	0%	N	
	Special Event Venue/Open Space						

City of Milpitas
RECREATION

Legend for Recreation Fees:

Priority II= Milpitas Public Schools, Chamber, and Gov. Agencies; Priority III= Resident Non-Profits; Priority IV= Milpitas Residents; Priority V= Non-Resident

	Activity Description	FY 23/24 Fee	FY 24/25 Fee	Charge Basis	Percent Change	Y'rly Infl'tr	Note
71	Application Fee (non-refundable)	$31	$31	per application	0%	N	
72	Rental Deposits	$1,000	$1,000	per day	0%	N	
73	Rental Fee						
	a) Priority II & III	$1,033	$1,033	per day	0%	N	
	b) Priority IV	$2,066	$2,066	per day	0%	N	
	c) Priority V	$3,099	$3,099	per day	0%	N	
74	Facility Attendant Fees (per attendant)	$31	$31	per hour	0%	N	
	Mobile Stage Rental						
75	Deposit (All Priorities)	$1,000	$1,000		0%	N	
76	Rental (All Priorities)	$1,370 - $2,740	$1,370 - $2,740	per day	5%	Y	
77	Light Package	$110 - $1,100	$110 - $1,100	per rental	5%	Y	[c]
78	Light Mixer	$110 - $440	$110 - $440	per rental	5%	Y	[d]
79	Light Tech	$33 - $110	$33 - $110	per hour	varies	Y	[e]
80	Staff Fee	$110 - $2,750	$110 - $2,750	per hour	5%	Y	[f]
81	Mileage	$0.50 - $3.50	$0.50 - $3.50	per mile outside City	0%	Y	[g]
82	ADA Ramp	$270	$270		4%	Y	
83	Truss Roof Cover/ Banner Support	$110 - $440	$110 - $440	per rental	5%	Y	[c]
	Picnic Area Rentals						
84	Application Fee (non-refundable)	$21 - $31	$21 - $31		0%	N	
85	Rental Deposit: Large Picnic Area	$250	$250		0%	N	
86	Small Parks with Restrooms (50 or less capacity)						
	a) Priority III & IV	$85	$85	per day per area	0%	N	[b]
	b) Priority V	$150	$150	per day per area	0%	N	[b]
87	Small Parks without Restrooms (50 or less capacity)						
	a) Priority III & IV	$65	$65	per day per area	0%	N	[b]
	b) Priority V	$130	$130	per day per area	0%	N	[b]

City of Milpitas
RECREATION

Legend for Recreation Fees:

Priority II= Milpitas Public Schools, Chamber, and Gov. Agencies; Priority III= Resident Non-Profits; Priority IV= Milpitas Residents; Priority V= Non-Resident

	Activity Description	FY 23/24 Fee	FY 24/25 Fee	Charge Basis	Percent Change	Y'rly Infl'tr	Note
88	Medium Parks 50 to 100 or less capacity						
	a) Priority III & IV	$145	$145	per day per area	0%	N	[b]
	b) Priority V	$205	$205	per day per area	0%	N	[b]
89	Large Parks More than 100+ capacity						
	a) Priority III & IV	$330	$330	per day per area	0%	N	[b]
	b) Priority V	$390	$390	per day per area	0%	N	[b]
	Sal Cracolice Facility Rental						
90	Application Fee (non-refundable)	$21 - $32	$22 - $34		6%	N	
91	Rental Deposit Meeting Room	$200	$200	per rental	0%	N	[h]
92	Rental Deposit Amphitheater	n/a	$500	per rental	0%	N	[h]
93	Rental Deposit Auditorium	$500	$500		0%	N	[h]
94	Auditorium w/kitchenette (3hr. Minimum)						
	a) Priority II	no fee	no fee		0%	N	
	b) Priority III	$85	$85	per hour	0%	N	
	c) Priority IV	$170	$170	per hour	0%	N	
	d) Priority V	$230	$230	per hour	0%	N	
95	Facility Attendant Fees (per attendant)						
	a) Priority II, III, & IV	$31	$31	per hour	0%	N	
	b) Priority V	$62	$62	per hour	0%	N	
96	Amphitheatre						
	a) Priority II, III, & IV	$130	$130	per hour	0%	N	
	b) Priority V	$190	$190	per hour	0%	N	
97	Meeting Room (2 hr Minimum)						
	a) Priority II	no fee	no fee		0%	N	
	b) Priority III	$47	$47	per hour	0%	N	
	c) Priority IV	$94	$94	per hour	0%	N	
	d) Priority V	$154	$154	per hour	0%	N	
	Senior Center Rentals						
98	Application Fee (non-refundable)	$21 - $32	$22 - $34		6%	N	
99	Rental Deposits: Auditorium	$500	$500		0%	N	[h]

City of Milpitas
RECREATION

Legend for Recreation Fees:

Priority II= Milpitas Public Schools, Chamber, and Gov. Agencies; Priority III= Resident Non-Profits; Priority IV= Milpitas Residents; Priority V= Non-Resident

Activity Description	FY 23/24 Fee	FY 24/25 Fee	Charge Basis	Percent Change	Y'rly Infl'tr	Note
100 Rental Deposits: Classrooms						
a) Priority II	no fee	no fee		0%	N	
b) Priority III	$200	$200		0%	N	
c) Priority IV	$200	$200		0%	N	
d) Priority V	$200	$200		0%	N	
101 Community Room Auditorium (3hr. Minimum)						
a) Priority II	no fee	no fee	per hour	0%	N	
b) Priority III	$95	$95	per hour	0%	N	
c) Priority IV	$190	$190	per hour	0%	N	
d) Priority V	$250	$250	per hour	0%	N	
102 Classroom 140 and 141 (Full) (2 hr. Minimum)						
a) Priority II	no fee	no fee	per hour	0%	N	
b) Priority III	$47	$47	per hour	0%	N	
c) Priority IV	$94	$94	per hour	0%	N	
d) Priority V	$154	$154	per hour	0%	N	
103 Classroom 140 and 141 (Half)						
a) Priority II	no fee	no fee	per hour	0%	N	
b) Priority III	$26	$26	per hour	0%	N	
c) Priority IV	$52	$52	per hour	0%	N	
d) Priority V	$112	$112	per hour	0%	N	
104 Facility Attendant Fees (per attendant)						
a) Priority II, III, & IV	$31	$31	per hour	0%	N	
b) Priority V	$62	$62	per hour	0%	N	
105 Dance Studio						
a) Priority II	no fee	no fee	per hour		N	
b) Priority III	$21	$21	per hour	0%	N	
c) Priority IV	$42	$42	per hour	0%	N	
d) Priority V	$102	$102	per hour	0%	N	

City of Milpitas
RECREATION

Legend for Recreation Fees:

Priority II= Milpitas Public Schools, Chamber, and Gov. Agencies; Priority III= Resident Non-Profits; Priority IV= Milpitas Residents; Priority V= Non-Resident

	Activity Description	FY 23/24 Fee	FY 24/25 Fee	Charge Basis	Percent Change	Y'rly Infl'tr	Note
	Community Garden						
106	Garden Plots (Residents Only)						
	a) Potable Water Community Gardens	$.75 -$ 1.15	$.75 -$ 1.15	per sq. foot	0%	N	
	b) Recycled Water Community Gardens	$.15 - $.55	$.15 - $.55	per sq. foot	7%	N	
	Pickleball / Tennis Court Rentals						
107	Deposit	$250	$250		0%	N	[h]
108	~~Tennis~~ Courts w/o lights (per court)						
	a) Priority II & III	n/a	n/a	per hour / per court	0%	N	
	b) Priority IV	$8	$8	per hour / per court	0%	N	
	c) Priority V	$10	$10	per hour / per court	0%	N	
109	~~Tennis~~ Courts w/ lights (per court)						
	a) Priority II & III	n/a	n/a	per hour / per court	0%	N	
	b) Priority IV	$10	$10	per hour / per court	0%	N	
	c) Priority V	$13	$13	per hour / per court	0%	N	
110	Tournament: ~~Tennis~~ Courts w/o lights						
	a) Priority II & III	n/a	n/a	per hour / per court	0%	N	
	b) Priority IV	$27	$27	per hour / per court	0%	N	
	c) Priority V	$54	$54	per hour / per court	0%	N	
111	Tournament: ~~Tennis~~ Courts w/ lights						
	a) Priority II & III	n/a	n/a	per hour / per court	0%	N	
	b) Priority IV	$31	$31	per hour / per court	0%	N	
	c) Priority V	$63	$63	per hour / per court	0%	N	
	Senior Enrichment Fees(50+ years of age)						
112	Senior Center Programs-Classes	$5 - $8	$5 - $8	per hour instruction	varies	Y	
113	Senior Center Citizen Trip Admin Fee	cost to City + Trip Admissi	Actual cost to City + Trip Admission Fee	per activity	varies	Y	[i]
114	Senior Center Events	$0 - $20	$0 - $20	per day/ticket	varies	Y	~~[j]~~
115	Senior Center Event Non-Member Fee	n/a	$5-$10	per day/ticket	varies	Y	
116	Senior Center Program/Class Non-Resident Fee	$11	$11	per class	10%	Y	

City of Milpitas
RECREATION

Legend for Recreation Fees:

Priority II= Milpitas Public Schools, Chamber, and Gov. Agencies; Priority III= Resident Non-Profits; Priority IV= Milpitas Residents; Priority V= Non-Resident

	Activity Description	FY 23/24 Fee	FY 24/25 Fee	Charge Basis	Percent Change	Y'rly Infl'tr	Note
	SPECIAL EVENTS						
	Special Event Fees						
117	Special Event Entrance Fee	$0 - $150	$0 - $150	per event	varies	Y	
118	Special Events Activity Fee	$0 - $40	$0 - $40	per activity	varies	Y	
119	Special Event Vendor Fees	$105 - $545	$105 - $545	per space OR 5% - 20% net sales	varies	Y	
120	Special Event Non-Profit Vendor Fees	$0 - $275	$0 - $275	per space OR 0% - 10% net sales	varies	Y	
	YOUTH						
	Youth Enrichment Fees						
121	Youth Sports User Fee						
	a) Outdoor	$10	$10	per player per season	0%	Y	
	b) Indoor	$21	$21	per player per season	0%	Y	
122	After School Program						
	a) Residents	$8 - $14	$8 - $14	per day for residents	varies	Y	
123	Late fee for After-School/Day Camp Programs						
	a) 1st offense & 2nd offense	$11	$11	per each 10 minutes	10%	Y	
	b) 3rd offense or more	$27	$27	per each 10 minutes	5%	Y	
124	Day Camp (Regular Day) – Internal Staff Run	$195 - $215	$202 - $223	per week	4%	Y	
125	Day Camp Extended Care – Internal Staff Run	$44	$44	per week	0%	Y	
	Department General Fees						
126	General Internal Class Program Fees	Staff time + Materials	Staff time + Materials			Y	
127	Membership Card replacement fee	$5	$5		0%	Y	
128	Transaction Fee	$1 - $6	$4 - $7	per receipt	4%	Y	
129	Trips	Actual cost to City + Trip Admission Fee	Actual cost to City + Trip Admission Fee		0%	Y	
130	General Non-Resident Fees	$22 - $33	$22 - $33	per person/class/ month/program or trip	varies	Y	
131	Rental Deposits: All other rooms	$200	$200		0%	N	~~[h]~~

City of Milpitas
RECREATION

Legend for Recreation Fees:

Priority II= Milpitas Public Schools, Chamber, and Gov. Agencies; Priority III= Resident Non-Profits; Priority IV= Milpitas Residents; Priority V= Non-Resident

	Activity Description	FY 23/24 Fee	FY 24/25 Fee	Charge Basis	Percent Change	Y'rly Infl'tr	Note
132	Recreation Services Merchandise	actual cost + % mark-up	actual cost + % mark-up		0%	Y	
133	Milpitas Resident Senior Citizen Discount (50 years+)	25% off any non-senior center based class	25% off any non-senior center based class		0%	Y	

Notes:

[a] No fee for Priority III.
[b] No fee for Priority II.
[c] Based on needs and packages.
[d] Based on needs and days.
[e] Based on cost of tech.
[f] Based on needs, actual costs of staff used in rental, time for load in/out and transportation.
[g] Based on current gas prices.
[h] No fee for Milpitas residents.
[i] Depending on trip costs.

Additional Notes:

* Recreation Fees recovery goals may be adjusted/balanced based on market factors.

City of Milpitas
FINANCE

	Activity Description	FY 23/24 Fee	FY 24/25 Fee	Charge Basis	Percent Change	Y'rly In'fltr	Note
1	Bond Payoff Calculation	$175	$185		5.80%	Y	
2	Business License						
	a) New Application Processing Fee	$50	$50	per year	0.00%	N	
	b) Processing Fee (renewal)	$25	$25	per year	0.00%	N	
3	Phone Check Fee (User Fee - Finance)	$15	$15		0.00%	N	
4	Property Damage Invoice Processing Fee	$30	$30	plus replacement cost	0.00%	N	
5	Credit Card Transaction Processing Fee	2.4%	2.4%	% of amount paid by credit card	0.00%	N	

City of Milpitas
CITY CLERK

	Activity Description	FY 23/24 Fee	FY 24/25 Fee	Charge Basis	Percent Change	Y'rly In'fltr	Note
	Miscellaneous						
1	Late Fine for Political Reform Act Filings	$10	$10	per day; up to $100 maximum fine	0.00%	N	[a]
2	Retrieval Fee for Political Reform Act Statements (5 or more years old)	$5 per search plus $0.10 per page	$5 per search plus $0.10 per page			N	[b]
3	Bingo License Renewals (Municipal Code)	$50	$50		0.00%	N	
4	Public Records Requests					N	
	a) Copies	$0	$0.10	per page			
	b) Requests Requiring Special Programming or Formatting	Actual Cost	Actual Cost	per hour / T&M			
5	Lobbyist Annual Registration Fee	$50	$50	per registration			
	a) For each client with compensation in excess of $500	$15	$15				
6	City Council Meeting Agenda Subscription	$20 plus postage	$20 plus postage	per mailed hard copy			

[a] Set by California Government Code Section 91013.

[b] Set by California Government Code Section 81008.

City of Milpitas
INFORMATION SERVICES

	Activity Description	FY 23/24 Fee	FY 24/25 Fee	Charge Basis	Percent Change	Y'rly In'fltr	Note
1	Digital Media Reproduction	$20	$20	per flash drive/DVD, etc.	0.00%	N	
2	Requests Requiring Special Programming or Formatting	Actual Cost	Actual Cost	per hour / T&M		N	

CITY OF MILPITAS
AGENDA REPORT
(AR)

Item Title:	**Presentation from Bay Area Air Quality Management District Staff on the Results of the South Bay Odor Attribution Study (Staff Contact: Christian Di Renzo, Public Works Director, 408-586-2602; and Elaine Marshall, Deputy Public Works Director, 408-586-2603)**
Category:	Presentations
Meeting Date:	5/21/2024
Recommendation:	Receive a presentation from Bay Area Air Quality Management District Staff on the Results of the South Bay Odor Attribution Study.

BACKGROUND:
Communities in and around Milpitas near a cluster of waste-handling facilities have experienced air quality and odor issues for many years. These facilities, which are all located in San José and border Milpitas, include the Newby Island Resource Recovery Park landfill and associated composting facility operated by Republic Services (NIRRP), the San José-Santa Clara Regional Wastewater Facility operated by the City of San José (RWF), and a dry anaerobic food waste digestion facility operated by ZeroWaste Energy Development Company (ZWED). There have been improvements to air quality in Milpitas due to Bay Area Air Quality Management District (BAAQMD) actions with assistance from the community. However, odors continue to be a concern. Odors have been difficult to attribute to a single facility or process as the different facilities produce many of the same odor-causing compounds.

The South Bay Odor Stakeholder Group (SBOSG) was formed in 2015 as a transparent forum to address odors that affect the Milpitas community, and discuss enforcement activities, permit and regulatory requirements, and odor mitigation and control measures. Quarterly meetings are attended by community and industry stakeholders, BAAQMD staff, staff representing the Cities of Fremont, Milpitas, and San José, and staff representing Assemblymember Alex Lee and Congressman Ro Khanna. The SBOSG identified the need for an independent odor study to better understand the contribution of different odor sources on the Milpitas community.

In 2019, BAAQMD committed to conduct an Odor Attribution Study to identify compounds from odor-producing facilities affecting Milpitas and nearby communities. BAAQMD released a Request for Proposal (RFP 2019-004 Odor Study) to identify contractors with the expertise to measure sources of odors from the landfill, transfer station, sewage treatment plant, and the compost and organic waste processing operations associated with the above mentioned facilities. In November 2019, BAAQMD Board of Directors authorized the Executive Officer/APCO to execute a contract for up to $500,000 for Jacobs Engineering Group, Inc (Jacobs). BAAQMD also executed a contract in 2019 for $92,000 with Montrose Environmental Group. In October 2020, the BAAQMD Board authorized an amendment to the Jacobs Engineering Group, Inc. contract for up to $506,000. The goal of the Odor Attribution Study was to determine the contribution and variability of odors from these facilities and any other sources in the vicinity, as well as support a strategy to reduce the odors impacting the local community.

ANALYSIS:
BAAQMD completed the Odor Attribution Study, which consisted of an overall source attribution study and a targeted odor compound fingerprint study. The source attribution study characterized the diurnal and seasonal odors through focused field sampling and data collection, while the targeted odor compound fingerprint study was a preliminary screening to identify compounds for further investigation.

The final study and information on key findings and next steps was recently published on the BAAQMD website and can be found here: https://www.baaqmd.gov/about-air-quality/air-quality-measurement/special-air-monitoring-projects/south-bay-odor-attribution-study

Staff from BAAQMD will provide a presentation on the results of the odor study projects, findings, and next steps.

RECOMMENDATION:
Receive a presentation from Bay Area Air Quality Management District Staff on the Results of the South Bay Odor Attribution Study