REGULAR MEETING OF THE MILPITAS CITY COUNCIL

AGENDA

TUESDAY, APRIL 15, 2025
CITY COUNCIL CHAMBER, 455 E. CALAVERAS BLVD, MILPITAS, CA
6:00 PM (CLOSED SESSION)
7:00 PM (PUBLIC BUSINESS)

For assistance in the following languages, you may call:
Đối với Việt Nam, gọi 408-586-2400
Para sa Tagalog, tumawag sa 408-586-3051
Para español, llame 408-586-3072

** To access written translation during the meeting, scan the QR Code.*

The City Council meeting is held in the City Council Chamber at City Hall, 455 E. Calaveras Blvd., Milpitas and via teleconference/Zoom webinar.
You may watch the Council meeting without providing public comment by accessing it via links here.

Meeting shall be livestreamed - Go to:
Facebook: https://www.facebook.com/CityofMilpitas/
YouTube: https://www.milpitas.gov/youtube
Web Streaming: https://www.milpitas.gov/webstreaming

PUBLIC COMMENT INSTRUCTIONS

Oral public comments may only be provided live during the City Council meeting in person, unless the City Council approves remote public comment. All comments provided shall be limited to three minutes or less as determined by the Mayor. All members of the public will be limited to one comment per agenda item, and one comment for non-agenda items. Members of the public may submit written comments by email to CityClerk@milpitas.gov

The meeting will be streamed via Zoom for viewing purposes only unless the City Council approves remote public comment. To watch via Zoom, please register at:

https://ci-milpitas-ca-gov.zoom.us/webinar/register/WN_mMBJ2n4mS1yJhzdBtk6OYw

NOTE: If a member of the public wishes to share any presentation materials for Council consideration, they must be submitted to the Clerk's Office by email to CityClerk@milpitas.gov by 12:00 p.m. on the day of the meeting. No presentations will be accepted in person in the Council Chambers.

MILPITAS CITY COUNCIL CODE OF CONDUCT

- Be respectful and courteous (words, tone, and body language).
- Model civility.
- Avoid surprises.
- Praise publicly and criticize privately.
- Focus on the issue, not the person.
- Refrain from using electronic devices while on the Council dais.
- Disclose conflicts of interest and affiliations related to agenda items.
- Separate governing from campaigning.
- The Council speaks with one voice after making policy on issues.
- Respect the line between policy and administration.
- Council will hold one another accountable to comply with this Code of Conduct.

CALL MEETING TO ORDER by Mayor and ROLL CALL by City Clerk (6:00 PM)

ADJOURN TO CLOSED SESSION

(a) PUBLIC EMPLOYEE APPOINTMENT AND HIRING

Pursuant to Government Code Section 54957(b)(1)
Employee Position: Interim City Manager

(b) CONFERENCE WITH LABOR NEGOTIATOR

Pursuant to Government Code Section 54957.6
Agency's Designated Representative(s): Christopher Creech, Assistant City Attorney
Employee Organization(s): Unrepresented – Interim City Manager

(c) CONFERENCE WITH LABOR NEGOTIATOR

Pursuant to Government Code Section 54957.6
Agency's Designated Representative(s): Matt Cano, Assistant City Manager
Employee Organization(s): Unrepresented – City Attorney

CLOSED SESSION ANNOUNCEMENT:

Report on action taken in Closed Session, if required per Government Code Section 54957.1, including the vote or abstention of each member present.

PLEDGE OF ALLEGIANCE

INVOCATION (Councilmember Chua)

PRESENTATIONS (7:05 PM)

- National Public Safety Telecommunicators Week – April 14-20 (Proclamation)
- Earth Day - April 22 (Proclamation)
- Arts, Culture & Creativity Month (Proclamation)
- American Muslim Appreciation & Awareness Month (Proclamation)
- Synopsys Championship Science Fair 2024 STEM Winners (Certificate)

PUBLIC FORUM (7:20 PM)

Members of the public are invited to speak on any item that does not appear on today's agenda. Comments will be limited to three minutes or less at the Mayor's discretion. When called to speak, you are encouraged to state your name for the record. As an item not listed on the agenda, no action can be taken, however the City Council may instruct the City Manager to place the item on a future meeting agenda.

ANNOUNCEMENT OF CONFLICT OF INTEREST AND CAMPAIGN CONTRIBUTIONS

READING OF THE CITY COUNCIL CODE OF CONDUCT

APPROVAL OF AGENDA

CONSENT CALENDAR (7:25 PM)

Consent calendar items are considered to be routine and will be considered for adoption by one motion. There will be no separate discussion of these items unless a City Councilmember, member of the audience or staff requests the Council to

remove an item from (or be added to) the consent calendar. Any person desiring to speak on any item on the consent calendar should ask to have that item removed from the consent calendar.

C1. Receive City Council Calendar of Meetings (Staff Contact: Suzanne Guzzetta, City Clerk, 408-586-3001)

Recommendation: Receive City Council Calendar of Meetings for April and May 2025.

C2. Approve City Council Meeting Minutes (Staff Contact: Suzanne Guzzetta, City Clerk, 408-586-3001)

Recommendation: Approve City Council Meeting minutes of April 1, 2025.

C3. Receive the Preview List of Anticipated Items for the Next Regular City Council Meeting (Staff Contact: Suzanne Guzzetta, City Clerk, 408-586-3001)

Recommendation: Receive the list of anticipated agenda items for the next regular City Council meeting.

C4. Receive and Review the List of Agenda Items Requested by City Councilmembers (Staff Contact: Suzanne Guzzetta, City Clerk, 408-586-3001)

Recommendation: Receive the list of items that have been requested by City Councilmembers and received consensus in previous meetings to date.

C5. Authorize and Approve Travel Request for Mayor Montano to Atlanta, GA (Staff Contact: Matt Cano, Assistant City Manager, 408-586-3012)

Recommendation: Authorize and approve travel to Atlanta, GA for Mayor Carmen Montano, to attend the NALEO 42nd Annual Conference to be held on July 22–24, 2025, for an estimated not-to-exceed amount of $3200 budgeted under the Individual Elected Official allocation for Conferences/Meetings/ Trainings.

C6. Adopt a Resolution Releasing Unclaimed Checks with a Value Less than $15 (Staff Contact: Luz Cofresí-Howe, Finance Director, 408-586-3111)

Recommendation: (1) Adopt a resolution releasing Unclaimed Checks with a value less than $15; and (2) Transfer a total of $308.54 in Unclaimed Checks to the General Fund.

C7. Receive and Approve the Calendar Year 2024 Controlled Equipment Annual Report (Staff Contact: Jared Hernanzez, Chief of Police, 408-586-2406)

Recommendation: Receive and approve the Calendar Year 2024 Controlled Equipment Annual Report.

C8. Approve and Authorize the City Manager, or Designee, to Execute Amendment No. 1 to the Funding Agreement between the City of Milpitas and the Santa Clara Valley Transportation Authority for the Calaveras Boulevard Widening Project, CIP No. 4258 (Staff Contact: Christian Di Renzo, Public Works Director, 408-586-2602)

Recommendation: Approve and authorize the City Manager, or designee, to execute Amendment No. 1 to the Funding Agreement between the City of Milpitas and the Santa Clara Valley Transportation Authority for the Calaveras Boulevard Widening Project, CIP No. 4258.

C9. Adopt a Resolution to Approve Project Plans and Specifications, and Award Construction Contract to GSW Construction, Inc. for the McCandless Well Facility, Project No. 7076 (Staff Contact: Christian Di Renzo, Public Works Director, 408-586-2602)

Recommendation: (1) Adopt a resolution to approve the project plans and specifications, (2) Award the construction contract to GSW Construction, Inc. in the total amount of $5,336,500, (3) Authorize the City Manager to execute the construction contract with GSW Construction, Inc.; and (4) Authorize the Public Works Director to negotiate and execute contract change order(s) in an aggregate amount not to exceed $800,000 for the McCandless Well Facility, Project No. 7076.

C10. Approve Personnel Realignment to Meet Department Operations (Staff Contact: Christian Di Renzo, Public Works Director, 408-586-2602)

Recommendation: (1) Approve the deletion of a vacant Principal Engineer position and the addition of a Public Works Division Manager – Engineering position in the Utility Engineering Division of Public Works; and (2) Approve the deletion of a vacant Senior Public Works Lead position and the addition of a Maintenance Supervisor position in the Utility Maintenance division of Public Works.

C11. Adopt a Resolution Authorizing the Purchase of a Sewer Closed Circuit Television Truck from U-Rock Utility Equipment through a Sourcewell Cooperative Purchase Agreement (Staff Contact: Christian Di Renzo, Public Works Director, 408-586-2602)

Recommendation: Adopt a resolution authorizing the purchase of a sewer closed circuit television camera truck for the Public Works Department from U-Rock Utility Equipment through a Sourcewell Cooperative Purchase Agreement in an amount not-to-exceed $372,368.81.

C12. Receive an Update on the Security Improvements at the McCarthy Ranch Sewer Lift Station (Main Lift) and Determine that the Condition Continues to Constitute an Emergency (Staff Contact: Christian Di Renzo, Public Works Director, 408-586-2602)

Recommendation: (1) Receive an update on the security improvements at the McCarthy Ranch Sewer Lift Station; and (2) Determine by a four-fifths vote that the condition continues to constitute an emergency.

C13. Consider a Fee Waiver Request from the Samuel Ayer High School Alumni Association (Staff Contact: Renee Lorentzen, Director of Recreation and Community Services, 408-586-3409)

Recommendation: Approve a fee waiver of $1,500 for the Samuel Ayer High School Alumni Association 25th Annual All Class Reunion Picnic at Murphy Park on September 20, 2025.

PUBLIC HEARINGS (7:30 PM)

Members of the public may be allotted up to three (3) minutes or less at the Mayor's discretion, to comment on any public hearing item. Applicants/Appellants and their representatives may be allotted up to a total of ten (10) minutes for opening statements and up to a total of five (5) minutes maximum for closing statements. Items requested/recommended for continuance are subject to Council's consent at the meeting.

14. Adopt a Resolution to Amend the Site Development Permit and Approve a Density Bonus Permit to Modify the Design and Unit Configuration of a Building at 1355 California Circle (Staff Contact: Jay Lee, Planning Director, 408-586-3077)

Recommendation: (1) Conduct a public hearing; and (2) Adopt a resolution to amend the Site Development Permit and approve a Density Bonus Permit for an apartment building at 1355 California Circle, subject to findings and conditions of approval.

15. Adopt a Resolution Approving a General Plan Amendment to Update the Town Center and Neighborhood Commercial Mixed-Use (NCMU) Descriptions and Introduce an Ordinance Approving a Zoning Amendment to Establish the NCMU District and Update the Existing Town Center District to Create Housing Opportunity Districts (Staff Contact: Jay Lee, Planning Director, 408-586-3077)

Recommendation: (1) Conduct a public hearing and determine that the EIR Addendum and Supplemental Letter to the Addendum adequately analyze the potential environmental impacts associated with the proposed General Plan and Zoning Amendments and are in compliance pursuant to CEQA Guidelines §15162 and §15164, (2) Adopt a resolution approving General Plan Text and Map Amendment No. GP24-0001 to update the Town Center (TWC) and Neighborhood Commercial Mixed-Use (NCMU) descriptions and amend the land use designation of certain parcels; and (3) Waive the first reading beyond the title and introduce Ordinance No. 38.857 approving Zoning Text and Zoning Map Amendment No. ZA24-0001 to establish the Neighborhood Commercial Mixed-Use (NCMU-1,2,3) district and subdistricts, and update the existing Town Center (TC districts to establish the subdistricts (TC-1,2,3).

COMMUNITY SERVICES AND SUSTAINABLE INFRASTRUCTURE (8:30 PM)

16. Receive a Presentation on the Draft Public Art Master Plan (Staff Contact: Renee Lorentzen, Recreation and Community Services Director, 408-586-3409)

Recommendation: Receive a presentation on the draft Public Art Master Plan and provide feedback on key strategies to staff.

LEADERSHIP AND SUPPORT SERVICES (9:00 PM)

17. Adopt a Resolution Appointing an Interim City Manager (Staff Contact: Kelli Parmley, Human Resources Director, 408-586-3086)

Recommendation: (1) Adopt a resolution to appoint an Interim City Manager effective on approval and until a permanent City Manager is appointed, (2) Approve and authorize the Mayor to execute an employment agreement on behalf of the City, and (3) Authorize the Assistant City Manager or designee to take such other actions as necessary and appropriate to carry out the purpose of this appointment.

ANNOUNCEMENTS AND FUTURE AGENDA ITEMS (9:30 PM)

Members of the City Council or City Manager may make brief announcements at this time. Members of the City Council may also suggest future agenda items. For future agenda items, the City Council shall not debate the topic or engage in discussion but shall simply state a "yes" or "no" as whether to move the item forward. If a majority of the City Council agrees to move the item forward, the City Manager shall place the item on a future agenda.

ADJOURNMENT (9:35 PM)

KNOW YOUR RIGHTS UNDER THE OPEN GOVERNMENT ORDINANCE

Government's duty is to serve the public, reaching its decisions in full view of the public. Commissions and other City agencies exist to conduct the people's business. This ordinance assures that deliberations are conducted before the people and City operations are open to the people's review. For more information on your rights under the Open Government Ordinance or to report a violation, contact the City Attorney's office at Milpitas City Hall, 455 E. Calaveras Blvd., Milpitas, CA 95035
e-mail:mmutalipassi@milpitas.gov / Phone: 408-586-3040

The Open Government Ordinance is codified in the Milpitas Municipal Code as Title I Chapter 310 and is available online at the City's website www.milpitas.gov by selecting the Milpitas Municipal Code link.

Materials related to an item on this agenda submitted to the City Council after initial distribution of the agenda packet are available for public inspection at the City Clerk's office at Milpitas City Hall, 3rd floor 455 E. Calaveras Blvd., Milpitas and on City website. City Council agendas and related materials can be viewed online: www.milpitas.gov/government/council/agenda_minutes.asp (select meeting date)

APPLY TO SERVE ON A CITY COMMISSION

Commission application forms are available online at www.milpitas.gov or at Milpitas City Hall.
Contact the City Clerk's Office at 408-586-3001 for more information.

If you need assistance, per the Americans with Disabilities Act, for any City of Milpitas public meeting, please call the City Clerk at 408-586-3001 or send an e-mail to CityClerk@milpitas.gov prior to the meeting. You may request a larger font agenda.

March 2025

S	M	T	W	T	F	S
						1
2	3	4	5	6	7	8
9	10	11	12	13	14	15
16	17	18	19	20	21	22
23	24	25	26	27	28	29
30	31					

Milpitas City Council Calendar
April 2025

May 2025

S	M	T	W	T	F	S
				1	2	3
4	5	6	7	8	9	10
11	12	13	14	15	16	17
18	19	20	21	22	23	24
25	26	27	28	29	30	31

Sunday	Monday	Tuesday	Wednesday	Thursday	Friday	Saturday
		1 **6:00 PM**-Closed Session **7:00 PM**-City Council	**2** **2:00 PM**-Santa Clara VTA Monthly Briefing - Northeast Group (CM) (Santa Clara) **5:30 PM**-Veterans Commission (GB) **7:00 PM**-Community Housing Commission (EC)	**3** **5:30 PM**-Milpitas Chamber of Commerce Board (GB) **5:30 PM**-Santa Clara VTA Board of Directors (CM)	**4**	**5**
6	**7** **7:00 PM**-Parks, Recreation & Cultural Resources Commission (EC)	**8**	**9** **4:30 PM**-City Council Finance Subcommittee (CM/EC) **7:00 PM**-Silicon Valley Clean Energy Board of Directors (GB) (Cupertino) **7:00 PM**-Planning Commission	**10** **4:00 PM**-Treatment Plant Advisory Committee (CM) (San Jose) **4:00 PM**-Santa Clara VTA Policy Advisory Committee (EC) **6:00 PM**-Youth Advisory Commission (HL) **7:00 PM**-Cities Assoc of SCC (CM)	**11**	**12**
13	**14**	**15** **5:00 PM**-Closed Session **7:00 PM**-City Council	**16** **6:00 PM**-Energy and Environmental Sustainability Commission (EC)	**17**	**18**	**19**
20	**21** **7:00 PM**-Science, Technology, and Innovation Commission (WL)	**22** **1:30 PM**-Senior Advisory Commission (HL)	**23** **5:30 PM**-Cities Assoc. of SCC - Recycling and Waste Reduction Commission (CM)	**24** **12:00 PM**-Santa Clara County Library JPA Board Meeting (CM) (Campbell, CA)	**25**	**26**
27	**28**	**29**	**30**			

April 2025

S	M	T	W	T	F	S
		1	2	3	4	5
6	7	8	9	10	11	12
13	14	15	16	17	18	19
20	21	22	23	24	25	26
27	28	29	30			

Milpitas City Council Calendar
May 2025

June 2025

S	M	T	W	T	F	S
1	2	3	4	5	6	7
8	9	10	11	12	13	14
15	16	17	18	19	20	21
22	23	24	25	26	27	28
29	30					

Sunday	Monday	Tuesday	Wednesday	Thursday	Friday	Saturday
				1 **5:30 PM**-Santa Clara VTA Board of Directors (CM) **5:30 PM**-Milpitas Chamber of Commerce Board (GB)	**2**	**3**
4	**5** **7:00 PM**-Parks, Recreation & Cultural Resources Commission (EC)	**6** **6:00 PM**-Closed Session **7:00 PM**-City Council	**7** **2:00 PM**-Santa Clara VTA Monthly Briefing - Northeast Group (CM) (Santa Clara)	**8** **4:00 PM**-Santa Clara VTA Policy Advisory Committee (EC) **4:00 PM**-Treatment Plant Advisory Committee (CM) (San Jose) **6:00 PM**-Youth Advisory Commission (HL) **7:00 PM**-Cities Assoc of SCC (CM)	**9**	**10**
11	**12** **4:30 PM**-Economic Development and Trade Commission (WL)	**13** **4:00 PM**-Milpitas HOPE	**14** **4:30 PM**-City Council Finance Subcommittee (CM/EC) **7:00 PM**-Planning Commission **7:00 PM**-Silicon Valley Clean Energy Board of Directors (GB) (Cupertino)	**15** **6:30 PM**-Bay Area Water Supply Conserv Agency (CM) (Oak Room - San Mateo Main Library) **7:00 PM**-Public Safety and Emergency Preparedness Commission (WL)	**16**	**17**
18	**19** **7:00 PM**-Science, Technology, and Innovation Commission (WL) **7:00 PM**-Library and Education Commission (HL) (Milpitas Public Library) **7:00 PM**-Arts Commission Special Meeting	**20** **5:00 PM**-Closed Session **7:00 PM**-City Council	**21** **6:00 PM**-Energy and Environmental Sustainability Commission (EC)	**22** **4:00 PM**-Silicon Valley Regional Interoperability Authority (SVRIA) (GB)	**23**	**24**
25	**26** **Memorial Day – City Observed Holiday** **City Hall Closed**	**27**	**28** **12:00 PM**-Santa Clara Valley Water District - Water Commission (CM) **7:00 PM**-Planning Commission	**29**	**30**	**31**

SPECIAL MEETING OF THE MILPITAS CITY COUNCIL

MINUTES

TUESDAY, APRIL 1, 2025

The City Council of the City of Milpitas convened in a Special Meeting on April 1, 2025, in the City Council Chamber, 455 E. Calaveras Blvd, Milpitas, CA, and via teleconference/Zoom webinar.

CALL MEETING TO ORDER by Mayor and ROLL CALL by City Clerk

Mayor Montano called the Regular City Council meeting to order at 8:03 AM. Roll Call was taken by City Clerk Guzzetta.

PRESENT:	Mayor Montano, Vice Mayor Barbadillo (8:07 AM), Councilmember Chua, Councilmember Lam, Councilmember Lien
ABSENT:	None

PLEDGE OF ALLEGIANCE

The City Council recited the pledge of allegiance.

PUBLIC FORUM

There were no public comments.

ANNOUNCEMENT OF CONFLICT OF INTEREST AND CAMPAIGN CONTRIBUTIONS

Acting City Attorney Creech asked the Mayor and City Councilmembers if they had any personal conflicts of interest. By roll call, there were no conflicts of interest (Absent: Barbadillo). Acting City Attorney Creech asked the Mayor and City Councilmembers if they had any reportable campaign contributions. By roll call, there were no reportable campaign contributions (Absent: Barbadillo).

READING OF THE CITY COUNCIL CODE OF CONDUCT

Mayor Montano read the City Council Code of Conduct.

APPROVAL OF AGENDA

After discussion, motion: to approve the agenda.

Motion/Second: Councilmember Chua / Vice Mayor Barbadillo
Motion carried by the following:

AYES:	Mayor Montano, Vice Mayor Barbadillo, Councilmember Chua, Councilmember Lam, Councilmember Lien
NOES:	None

Acting City Atorney Creech briefed the City Council on the Closed Session Agenda.

ADJOURN TO CLOSED SESSION

The City Council adjourned to Closed Session at 8:09 AM.

(a) PUBLIC EMPLOYEE APPOINTMENT, HIRING AND INTERVIEWS

Pursuant to Government Code Section 54957(b)(1)
Employee Position: Interim City Manager

Vice Mayor Barbadillo left the meeting at 11:05 AM.

CLOSED SESSION ANNOUNCEMENT:

The City Council reconvened at 11:12 AM.

Acting City Attorney Creech had no report out from Closed Session.

ADJOURNMENT

Mayor Montano adjourned the meeting at 11:13 AM.

Draft meeting minutes submitted by City Clerk, Suzanne Guzzetta

JOINT MEETING OF THE MILPITAS CITY COUNCIL AND HOUSING AUTHORITY

MINUTES

TUESDAY, APRIL 1, 2025

The City Council of the City of Milpitas convened on the regular City Council meeting day in a Joint Meeting of the Milpitas City Council and Housing Authority on April 1, 2025, in the City Council Chamber, 455 E. Calaveras Blvd, Milpitas, CA, and via teleconference/Zoom webinar.

CALL MEETING TO ORDER by Mayor and ROLL CALL by City Clerk

Mayor Montano called the Regular City Council meeting to order at 5:30 PM. Roll Call was taken by City Clerk Guzzetta.

PRESENT:	Mayor Montano, Vice Mayor Barbadillo (5:31 PM), Councilmember Chua, Councilmember Lam, Councilmember Lien
ABSENT:	None.

Acting City Attorney Creech briefed the City Council on the Closed Session Agenda.

The City Council adjourned to Closed Session at 5:32 PM.

ADJOURN TO CLOSED SESSION

(a) PUBLIC EMPLOYEE APPOINTMENT AND HIRING

Pursuant to Government Code Section 54957(b)(1)
Employee Position: Interim City Manager

(b) CONFERENCE WITH LABOR NEGOTIATOR

Pursuant to Government Code Section 54957.6
Agency's Designated Representative(s): Kelli Parmley, Human Resources Director
Employee Organization(s): Unrepresented – Interim City Manager

CLOSED SESSION ANNOUNCEMENT:

The City Council reconvened at 7:23 PM.

Acting City Attorney Creech had no report out from Closed Session.

PLEDGE OF ALLEGIANCE

Mayor Montano led the Pledge of Allegiance.

INVOCATION

Councilmember Chua provided the invocation.

PRESENTATIONS

Mayor Montano and the City Council presented proclamations in recognition of Fair Housing Month, Cesar Chavez Day, and Black April. Rosa Amador from La Raza Roundtable accepted the proclamation for Cesar Chavez Day. Ha Phan accepted the proclamation for Black April.

PUBLIC FORUM

There were the following public speakers:
1. Voltaire Montemayor

ANNOUNCEMENT OF CONFLICT OF INTEREST AND CAMPAIGN CONTRIBUTIONS

Acting City Attorney Creech asked the Mayor and City Councilmembers if they had any personal conflicts of interest. By roll call, there were no conflicts of interest. Acting City Attorney Creech asked the Mayor and City Councilmembers if they had any reportable campaign contributions. By roll call, there were no reportable campaign contributions.

READING OF THE CITY COUNCIL CODE OF CONDUCT

Mayor Montano read the City Council Code of Conduct.

APPROVAL OF AGENDA

After discussion, motion: to approve the agenda.

Motion/Second: Councilmember Chua / Councilmember Lien
Motion carried by the following:

AYES:	Mayor Montano, Vice Mayor Barbadillo, Councilmember Chua, Councilmember Lam, Councilmember Lien
NOES:	None

CONSENT CALENDAR

Councilmember Chua asked to pull Item C5.

There were no public comments.

After discussion, motion: to approve the Consent Calendar.

Motion/Second: Vice Mayor Barbadillo / Councilmember Lien
Motion carried by the following:

AYES:	Mayor Montano, Vice Mayor Barbadillo, Councilmember Chua, Councilmember Lam, Councilmember Lien
NOES:	None

1. Receive City Council Calendar of Meetings (Staff Contact: Suzanne Guzzetta, City Clerk, 408-586-3001)

Received City Council Calendar of Meetings for April 2025.

2. Approve City Council Meeting Minutes (Staff Contact: Suzanne Guzzetta, City Clerk, 408-586-3001)

Approved City Council Meeting minutes of March 18, 2025.

3. Receive the Preview List of Anticipated Items for the Next Regular City Council Meeting (Staff Contact: Suzanne Guzzetta, City Clerk, 408-586-3001)

Received the list of anticipated agenda items for the next regular City Council meeting.

4. Receive and Review the List of Agenda Items Requested by City Councilmembers (Staff Contact: Suzanne Guzzetta, City Clerk, 408-586-3001)

Received the list of items that have been requested by City Councilmembers and received consensus in previous meetings to date.

5. Approve an Amendment to the Professional Services Agreement with Berry, Dunn, McNeil & Parker LLC for Enterprise Resource Planning Consulting Services (Staff Contact: Luz Cofresí-Howe, Finance Director, 408-586-3111; and Kelli Parmley, Human Resources Director 408-586-3086)

Item pulled from Consent Calendar.

6. Receive and Authorize Submittals of the 2024 Housing Element Annual Progress Report and Housing Successor Agency Annual Report to California Department of Housing and Community Development and Governor's Office of Planning and Research (Staff Contact: Sarah Balcha, Acting Housing Official, 408-586-3268)

Received and authorized submittals of the 2024 Housing Element Annual Progress Report and Housing Successor Agency Annual Report to the California Department of Housing and Community Development and Governor's Office of Planning and Research.

7. Receive the 2024 General Plan Annual Progress Report and Authorize Submittal of the Report to the Governor's Office of Planning and Research (Staff Contact: Jay Lee, Planning Director, 408-586-3077; and Lillian VanHua, Principal Planner, 408-586-3073)

Received the 2024 General Plan Annual Progress Report and authorized the submittal of the report to the Governor's Office of Planning and Research (OPR).

8. Adopt a Resolution to Accept Fire Service Project as Part of the Fire Station No. 1 Modular Building Replacement, Project No. 3465 and Authorize the City Engineer to File a Notice of Completion and Issue a Notice of Final Acceptance after the One-Year Warranty (Staff Contact: Christian Di Renzo, Public Works Director, 408-586-2602; and Michael Silveira, City Engineer, 408-586-3303)

Adopted **Resolution No. 9397** to accept Fire Service Project as part of Fire Station No.1 Modular Building Replacement, Project No. 3465, and authorized the City Engineer to file a Notice of Completion and issue a Notice of Final Acceptance after the one-year warranty.

9. Approve an Amendment to the Master Agreement with the Santa Clara Valley Transportation Authority Relating to the Silicon Valley Rapid Transit Berryessa BART Extension Project for Reimbursement of Pavement Restoration along City Streets (Staff Contact: Christian Di Renzo, Public Works Director, 408-586-2602; Michael Silveira, City Engineer, 408-586-3303)

Approved and authorized the City Manager, or designee, to execute Amendment No. 17 to the Master Agreement with the Santa Clara Valley Transportation Authority relating to the Silicon Valley Rapid Transit Berryessa BART Extension Project for reimbursement of pavement restoration along City streets.

10. Receive an Update on the Security Improvements at the McCarthy Ranch Sewer Lift Station (Main Lift) and Determine that the Condition Continues to Constitute an Emergency (Staff Contact: Christian Di Renzo, Public Works Director, 408-586-2602)

(1) Received an update on the security improvements at the McCarthy Ranch Sewer Lift Station; and
(2) Determined by a four-fifths vote that the condition continues to constitute an emergency.

PUBLIC HEARINGS

11. Conduct a Public Hearing on the Request for a Bingo License for the Barbara Lee Senior Center (Staff Contact: Suzanne Guzzetta, City Clerk, 408-586-3001)

City Manager Thomas introduced the item. City Clerk Guzzetta presented the report.

Councilmember Chua spoke in support of the item, noting the seniors had requested the bingo and volunteered to help manage the sessions.

Councilmember Lam asked about the license renewal duration and operating hours. Recreation and Community Services Director Lorentzen noted the Senior Center would run 3-hour sessions around 10 a.m. to 1 p.m., utilizing the Senior Center's operating hours.

Mayor Montano asked about inspection requirements. Police Chief Hernandez explained that bingo providers must annually report changes in management, procedures, and financial status.

Councilmember Lam asked about security requirements. Police Chief Hernandez and Acting City Attorney Creech confirmed no specific security mandate exists, but Chief Hernandez noted he could recommend security if it was warranted.

Councilmember Lien asked after revenues from bingo games. Recreation and Community Services Director Lorentzen explained that most goes to bingo winners, with excess revenue, estimated at $500-$750 annually, going to the city's general fund.

Vice Mayor Barbadillo noted the growing number of bingo licenses and suggested reviewing the bingo ordinance in the future.

Mayor Montano opened the public hearing.
1. Voltaire

Mayor Montano closed the public hearing.

After discussion, motion: to approve a Bingo License for the City of Milpitas Barbara Lee Senior Center to hold a regular bingo game..

Motion/Second: Councilmember Chua / Councilmember Lien
Motion carried by the following:
AYES: Mayor Montano, Vice Mayor Barbadillo, Councilmember Chua, Councilmember Lam, Councilmember Lien
NOES: None

LEADERSHIP AND SUPPORT SERVICES

12. Receive presentations about City of Milpitas Property Tax and City of Milpitas Transactions (Sales) & Use Tax (Staff Contact: Luz Cofresí-Howe, Finance Director, 408-586-3111)

City Manager Thomas and Finance Director Cofresí-Howe introduced the item. HdL President Paula Cone presented the report on property tax. HdL Principal Tracy Vesely presented the report on Trasanctions (Sales) & Use Tax.

Both representatives from HdL responded to questions from the City Council.

There were the following public speakers:
1. Voltaire Montemayor

ITEMS PULLED FROM CONSENT CALENDAR

5. Approve an Amendment to the Professional Services Agreement with Berry, Dunn, McNeil & Parker LLC for Enterprise Resource Planning Consulting Services (Staff Contact: Luz Cofresí-Howe, Finance Director, 408-586-3111; and Kelli Parmley, Human Resources Director 408-586-3086)

Councilmember Chua initiated the discussion, requesting clarification from staff on the requested increase. She expressed concerns about project management oversight, questioned deliverables, and emphasized the need for a detailed project plan to justify the expense. Finance Director Cofresí-Howe explained the original budget underestimated external project management needs and that the project scope had evolved significantly since its inception in 2021. She noted that the Finance and HRIS modules are closely integrated, and both she and the Human Resources Director are serving as project leads due to limited staff capacity.

Mayor Montano suggested deferring the item until a new city manager is in place but acknowledged the urgency conveyed by staff. Finance Director Cofresí-Howe cautioned that even a short delay could impact the project timeline and staff workload.

Councilmember Lien inquired about the operational impact of a delay. Luz and City Manager Thomas explained that postponement would strain resources, especially as staff are also preparing the city budget. Finance Director Cofresí-Howe emphasized the need for continuity to meet the targeted go-live dates for the Finance and HRIS modules, respectively.

Vice Mayor Barbadillo supported the funding, noting the necessity of the project and the professional judgment of staff. He acknowledged the historical issues and offered confidence in the current leadership's approach.

Councilmember Lam confirmed that the project would not halt immediately if a decision was delayed to the next meeting. Finance Director Cofresí-Howe replied they could continue short-term but stressed that the remaining hours were being rapidly consumed.

There were the following public speakers:
1. Voltaire Montemayor

City Manager Thomas offered final comments on the item.

After discussion, Vice Mayor Barbadillo made a motion: to approve and authorize the City Manager, or designee, to execute an amendment to the Professional Services Agreement with Berry, Dunn, McNeil & Parker LLC for Enterprise Resource Planning Consulting Services in the amount of $620,000 with additional authority to approve changes of up to 10%.

Councilmember Chua asked to remove the 10% contingency authority from the recommendation. Vice Mayor Barbadillo agreed to the amendment and restated the amended motion: to approve and authorize the City Manager, or designee, to execute an amendment to the Professional Services Agreement with Berry, Dunn, McNeil & Parker LLC for Enterprise Resource Planning Consulting Services in the amount of $610,500. Councilmember Lien seconded the motion.

Motion/Second: Vice Mayor Barbadillo / Councilmember Lien
Motion carried by the following:
AYES: Mayor Montano, Vice Mayor Barbadillo, Councilmember Lam, Councilmember Lien
NOES: Councilmember Chua

ANNOUNCEMENTS AND FUTURE AGENDA ITEMS

CIty Manager Thomas announced the budget study session scheduled for April 2, 2025, at 5 p.m., noting modifications made to the chambers to accommodate staff presentations.

Council Member Chua proposed creating a Milpitas Community Concert Choir, requesting city support for marketing and rehearsal space. There was unanimous consensus to add the item to the prioritization list.

Councilmember Lam announced the implementation of household battery disposal services at City Hall, thanking the City Manager, Assistant City Manager, and Public Works staff for this initiative.

Vice Mayor Barbadillo made the following requests:
1. To review the bingo ordinance to enhance transparency. There was unanimous consensus to add the item to the prioritization list.
2. Develop a project management policy. Assistant City Manager Matt Cano suggested creating an informational memo outlining project management phases and internal checks and balances.

Mayor Montano proposed adding names to the plaque at the Cesar Chavez Plaza when funding becomes available in the future. There was consensus to add the item to the prioritization list (Noes: Lien).

Councilmember Lam brought up concerns about the electronic devices language in the City Council Code of Conduct, suggesting modifications to the existing language. There was unanimous consent to bring the item forward with a future handbook update.

Councilmember Chua raised concerns on a report that one of the City Fire Stations did not have a flag pole. Fire Chief Schoonover assured the Councilmember that all stations have flagpoles and agreed to look into the matter.

ADJOURNMENT

Mayor Montano adjourned the meeting at 10:35 PM.

Draft meeting minutes submitted by City Clerk, Suzanne Guzzetta

TENTATIVE CITY COUNCIL AGENDA ITEM LIST

as of 4/11/2025

May 6, 2025 – Regular Meeting (7:00 PM)

CLOSED SESSION

INVOCATION (Vice Mayor Barbadillo)

PRESENTATION
- Affordable Housing and Building Safety Month (Proclamation)
- National Mental Health Awareness Month (Proclamation)
- Older Americans Month (Proclamation)

CONSENT CALENDAR
1. Receive City Council calendar for May 2025 (City Clerk)
2. Approve City Council meeting minutes of April 2 and 15, 2025 (City Clerk)
3. Preview list of items for May 20, 2025 (City Clerk)
4. Commission Appointments (City Clerk)
5. Agreement with WeHOPE for $203,033 for Homeless Outreach, Assessment and Case Management Services (Housing)
6. Adopt a Resolution Authorizing the Application to the HOME Investment Partnerships Program grant for $500,000 (Housing)
7. Housing Opportunity District Ordinance 2nd Reading (Planning)
8. Amendment to Lisa Wise consulting Professional Services Agreement for Comprehensive Zoning Ordinance Update (Planning)
9. Resolution to Approve Engineer's Report & Adopt Resolution of Intent to Levy & Collect Assessments and Provide Notice of Public Hearing for LLMD District No. 95-1 (Public Works / Engineering)
10. Resolution to Approve Engineer's Report & Adopt Resolution of Intent to Levy & Collect Assessments and Provide Notice of Public Hearing for LLMD District No. 98-1 (Public Works / Engineering)
11. Cape/Slurry Seal Road Preservation Award (Public Works / Engineering)
12. Add / Delete Public Works Staffing Changes: Maintenance Assistant to Maintenance Workers (2) (Public Works)
13. Acceptance of SVCE Grant for Vehicle Electrification (Public Works)
14. Emergency Declaration Update - Main Sewer Lift Station Security Measures (Public Works)
15. Public Art Master Plan Adoption (Recreation)

PUBLIC HEARINGS
16. Fire Hazard Severity Zone Maps (Fire Prevention)
17. CDBG FY 2025-2030 Consolidated Plan and FY25-26 Annual Action Plan (Housing)

LEADERSHIP AND SUPPORT SERVICES
18. Council Quarterly Prioritization (City Manager)

MILPITAS CITY COUNCIL
AGENDA ITEM REQUESTS

OPEN ITEMS				
Request No.	**Topic**	**Submitted by:**	**Date Requested**	**STATUS and/or DATE scheduled on City Council meeting agenda:**
1	Revise City Council Code of Conduct language regarding the use of electronic devices.	Lam	4/1/2025	This item is scheduled for consideration in the next quarterly prioritization update.
2	Add names to the plaque at the Cesar Chavez Plaza when funding becomes available in the future	Montano	4/1/2025	This item is scheduled for consideration in the next quarterly prioritization update.
3	Develop a project management informational memo.	Barbadillo	4/1/2025	This item is scheduled for consideration in the next quarterly prioritization update.
4	Review the bingo ordinance to enhance transparency	Barbadillo	4/1/2025	This item is scheduled for consideration in the next quarterly prioritization update.
5	Create a Milpitas Community Concert Choir with city support for marketing and rehearsal space.	Chua	4/1/2025	This item is scheduled for consideration in the next quarterly prioritization update.
6	Look into adding an entertainment zone to Main Street.	Montano	3/4/2025	An update on this item is included in the quarterly prioritization update.
7	Staff provide a detailed analysis of overtime expenditures by department.	Barbadillo	3/4/2025	An update on this item will be included as part of the FY 25-26 Budget Process
8	Return with a hiring activity report.	Barbadillo	3/4/2025	An update on this item will be included as part of the FY 25-26 Budget Process
9	Look into a policy to require a Super Majority vote by Council for any deductions to budget reserves.	Chua	2/18/2025	An update on this item is included in the quarterly prioritization update.
10	Bring back a discussion regarding fentanyl-related issues	Barbadillo	2/18/2025	An update on this item is included in the quarterly prioritization update.
11	Feasibility study regarding a police satellite office.	Montano	2/18/2025	An update on this item is included in the quarterly prioritization update.

ACTIVE ITEMS				
Request No.	**Topic**	**Submitted by:**	**Date Requested**	**STATUS and/or DATE scheduled on City Council meeting agenda:**
12	Staff organize a job fair for City job openings	Chua	11/19/2024	An update on this item is included in the quarterly prioritization update.
13	Bring back a study or analysis of the permit process	Chua	11/19/2024	An update on this item is included in the quarterly prioritization update.
14	Invite the HR Director to a future meeting to present on hiring processes and vacancies	Lien	10/1/2024	An update on this item is included in the quarterly prioritization update.
15	Explore updating the city's business tax rate schedule	Chua	10/1/2024	An update on this item is included in the quarterly prioritization update.
16	Explore funding options for new signage following the decision to rename the Milpitas Library to the Milpitas Jose Esteves Library	Barbadillo	9/3/2024	An update on this item is included in the quarterly prioritization update.
17	Send a letter to Supervisory Otto Lee regarding the weeds on Montague Expressway	Montano	8/13/2024	An update on this item is included in the quarterly prioritization update.
18	Update the animal control ordinance to include other animals such as horses and cats	Chua	9/3/2024	An update on this item is included in the quarterly prioritization update.
19	Look into a property for sale on Main Street to investigate the cost and feasibility of creating a museum for downtown or Old Town Main Street as part of the revitalization efforts.	Montano	8/13/2024	An update on this item is included in the quarterly prioritization update.
20	Look into adopting an ordinance similar to San Jose allowing ADUs (Accessory Dwelling Units) to	Chua	8/13/2024	An update on this item is included in the quarterly prioritization update.
21	Conduct a traffic study on Escuela Parkway to address circulation concerns	Montano	5/7/2024	An update on this item is included in the quarterly prioritization update.
22	Explore the possibility of augmenting the Planning Commission stipend	Barbadillo	4/16/2024	An update on this item is included in the quarterly prioritization update.
23	Consideration of the 20% Low Income Below Market Rate Housing	Montano	12/5/2023	An update on this item is included in the quarterly prioritization update.

NOTE: Deferred and Completed Items are not listed

MILPITAS CITY COUNCIL
AGENDA ITEM REQUESTS

ACTIVE ITEMS				
Request No.	**Topic**	**Submitted by:**	**Date Requested**	**STATUS and/or DATE scheduled on City Council meeting agenda:**
24	Bring back Bingo and the Tour at the Senior Center	Chua	11/7/2023	An update on this item is included in the quarterly prioritization update.
25	Referral for utility infrastructure cost on Main Street from Carlo to Corning Streets	Montano	10/17/2023	An update on this item is included in the quarterly prioritization update.
26	Main Street International Festival	Lien	10/3/2023	An update on this item is included in the quarterly prioritization update.
27	Pickleball Pilot Project	Chua	2/28/2023	An update on this item is included in the quarterly prioritization update.
28	Main Street Infrastructure Projects	Montano	2/28/2023	An update on this item is included in the quarterly prioritization update.
29	Main Street Flooding at Library	Chua	2/28/2023	An update on this item is included in the quarterly prioritization update.
30	Have the City look into the possibility of a Citywide Senior Discount	Barbadillo	2/7/2023	An update on this item is included in the quarterly prioritization update.
31	City Manager to look into defining either a standalone teen center or updating information to indicate the Senior Center also functions as a Teen Center	Chua	9/20/2022	An update on this item is included in the quarterly prioritization update.
32	City Manager look into implementing a workshop for small businesses on the bidding process for projects in the city	Chua	8/9/2022	An update on this item is included in the quarterly prioritization update.
33	Quarterly or Monthly crime statistics on Homekey Project	Chua	6/7/2022	An update on this item is included in the quarterly prioritization update.
34	Memorial Plaque in honor of youth skateboarder that passed away	Montano	6/7/2022	An update on this item is included in the quarterly prioritization update.
35	Evaluate reopening the childcare center with a non-profit organization running the center	Montano	2/1/2022	An update on this item is included in the quarterly prioritization update.
36	Staff to look into mural Art on Great Mall Parkway on the VTA owned Light rail pillars	Montano	11/16/2021	An update on this item is included in the quarterly prioritization update.
37	Have a picture of Albert Vogel Sr. put up in the Senior Center	Montano	10/19/2021	An update on this item is included in the quarterly prioritization update.
38	Include a bust of Maria Lemire on the Mural in front of the Senior Center	Montano	8/17/2021	An update on this item is included in the quarterly prioritization update.
39	Consider Community Museum and Park on Main St.	Phan	8/20/2019	Discussions with the property owner of this site are ongoing.

NOTE: Deferred and Completed Items are not listed

CITY OF MILPITAS
AGENDA REPORT
(AR)

Item Title:	**Authorize and Approve Travel Requests for Mayor Montano to Atlanta, GA (Staff Contact: Matt Cano, Assistant City Manager, 408-586-3012)**
Category:	Consent Calendar-Leadership and Support Services
Meeting Date:	4/15/2025
Recommendation:	Authorize and approve travel to Atlanta, GA for Mayor Carmen Montano, to attend the *NALEO 42nd Annual Conference* to be held on July 22–24, 2025, for an estimated not-to-exceed amount of $3,200 budgeted under the Individual Elected Official allocation for Conferences/Meetings/Trainings.

BACKGROUND:
The National Association of Latino Elected and Appointed Officials (NALEO) 42nd Annual Conference is the nation's largest and most prestigious gathering of Latino elected and appointed officials. This year, the NALEO conference will be held in Atlanta, GA from July 22–24, 2025. The conference is designed to enhance participant governance skills and deepen understanding of critical policy issues in a cross-jurisdictional context. Additionally, Mayor Montano's attendance at this conference will foster relationships with their peers. Included in this agenda packet is the preliminary conference agenda as Attachment 1.

ANALYSIS:
The City of Milpitas Travel and Expense Policy requires the City Council to approve all travel for elected officials and the City Manager. City Council approval of the Atlanta, GA travel request will allow Mayor Carmen Montano to gain additional knowledge from other elected and appointed officials, and bring that knowledge back to share with her colleagues. Continued conference participation and attendance also ensure that the Milpitas community is fully represented at the regional, state, and national levels.

POLICY ALTERNATIVE(S):
Not Applicable

FISCAL IMPACT:
The estimated individual expenses for the NALEO 42ND Annual Conference, including the registration fee, lodging, meals, mileage, airport parking and incidental reimbursements, are $3,200.

As this is the Mayor's first travel expenditure for Fiscal Year 2025-26, Mayor Carmen Montano will have a full $10,000 available of her annual travel allocation. if the City Council approves the recommendation, Mayor Montano will have $6,800 remaining in her annual travel allocation for Fiscal Year 2025-26.

CALIFORNIA ENVIRONMENTAL QUALITY ACT (CEQA):
The action is an organizational or administrative activity of the City government that will not result in direct or indirect physical changes in the environment and is not a project pursuant to Cal. Code of Regs., tit. 14, § 15378.

RECOMMENDATION:
Authorize and approve travel to Atlanta, GA for Mayor Carmen Montano, to attend the *NALEO 42nd Annual Conference* to be held on July 22–24, 2025, for an estimated not-to-exceed amount of $3,200 budgeted under the Individual Elected Official allocation for Conferences/Meetings/Trainings.

ATTACHMENT(S):
(a) NALEO 42nd Annual Conference Agenda
(b) Council Conferences/Trainings FY 2025-26 Budget Tracking Sheet

REGISTER NOW

Agenda

Conference sessions are designed to enhance participant governance skills and deepen understanding of critical policy issues in a cross-jurisdictional context.

Times in the agenda are in Eastern Time Zone. All events are subject to change.

Monday, Jul 21, 2025

2:00 PM - 5:00 PM EDT

Conference Early Bird Registration

Tuesday, Jul 22, 2025

9:00 AM - 10:00 AM EDT

Opening Gavel Ceremony & Breakfast Plenary: Growth of the Latino Community in the South

The American South has seen some of the largest rates of Latino population growth in the country. From 2010 to 2020, the region's total population grew from 26.6 million to 28.5 million — an increase of 7.1 percent — while the region's Latino population increased by 40 percent to 1.9 million. Georgia had the biggest raw population increase of nearly 270,000 Latinos and has seen continued growth in the number of Latino elected officials across all levels of government. Such growth has influenced the region's culture, economy, workforce, voting population, and political representation. During this opening plenary, panelists will provide an overview of the region's Latino community, including its economic impact and the evolution of its political leadership.

10:00 AM - 10:30 AM EDT

NALEO Service Project

NALEO Marketplace & Networking Break

10:30 AM - 12:00 PM EDT

Health Track: Medicaid: Federal Legislation, Funding Cuts & Local Level Impact

More than 70 million Americans, about one-fifth of the population, rely on Medicaid for their healthcare coverage. Congressional proposals to make changes to Medicaid would result in a significant shift of fiscal responsibility to state and local governments. During this session, participants will receive an overview of the Medicaid landscape, the impact of congressional proposals on local governments and the provision of healthcare for their most vulnerable populations, and the options available to policymakers at the local level to help ensure their constituents have access to the healthcare they need.

Tech Track: AI Regulations & Technology Developments

With hundreds of Artificial Intelligence (AI)-related bills introduced in 2025, state policymakers are navigating a rapidly evolving regulatory landscape. This session will provide an update on key legislative trends, emerging AI regulations, and policy priorities shaping the future of AI governance. Experts will also discuss how this technology is expected to expand across multiple sectors and what policymakers need to know to stay ahead of these developments.

Powering the Future: Meeting America's Growing Energy Needs

As the nation's energy demands grow, policymakers must navigate the challenges of ensuring reliable and sustainable power for the communities they represent and the industries that employ people and fuel local economies. From the rise of AI and data centers to the expansion of advanced manufacturing and smart infrastructure, energy consumption is evolving rapidly. This session will explore strategies to modernize the grid and enhance resilience while meeting the needs of a changing economy.

Education Track: The Future of Public Education

Public education remains at the forefront of national discourse as recent changes in legislation require schools and districts to evolve. A thorough understanding of federal and state education policy and how it will affect student success at the local levels requires a focused governance and leadership approach from school boards. In this session, participants will receive an overview of the public education landscape, understand the implication of national trends on local school districts, and acquire strategies to serve students in future contexts.

12:30 PM - 2:00 PM EDT

National Leadership Luncheon & Plenary

2:30 PM - 4:00 PM EDT

Tech Track: AI and the Workforce: Opportunities, Challenges, & Policy Considerations

Artificial intelligence (AI) is transforming workforce industries at a rapid pace, reshaping how jobs are created and performed. As AI-driven tools become more integrated into the healthcare, education, manufacturing, and public services sectors, policymakers must understand the implications for job creation and economic opportunities for the Latino workforce. This session will provide an overview of AI's impact on the workforce, highlight best practices in leveraging AI for workforce development, and explore strategies to ensure Latino workers and businesses are positioned for success in an AI-driven economy.

Governance Track: The New Financial Landscape for State & Local Governments

Governance Track: The New Financial Landscape for State & Local Governments

State and local governments face growing budget challenges due to expiring federal pandemic-era aid, inflation outpacing state funding, and slower local revenue growth. This session will provide policymakers with an overview of how governments are adjusting their fiscal strategies to sustain essential services and projects. Participants will also gain insights into short- and long-term approaches to maintaining fiscal resilience in an evolving economic landscape.

Financial Track: Expanding Homeownership for Stronger Communities

Homeownership is a key path to generational wealth, but many Latino families face barriers like limited financing options, housing shortages, and heirs' property issues. By 2040, Latinos are projected to account for 70% of net new homeowners, making policies that support access to homeownership vital for economic stability. This session will examine these barriers and explore best practices and policy solutions to expand homeownership opportunities and ensure long-term financial stability for Latino households.

5:00 PM - 7:00 PM EDT

Opening Reception: Welcome to ATL

Attendees will not want to miss out on the opportunity to network with colleagues from across the country as they enjoy an assortment of culinary delights and refreshing cocktails at this kick-off event at the World of Coca-Cola.

Wednesday, Jul 23, 2025

9:00 AM - 10:00 AM EDT

Breakfast Plenary: New Federal Policies & the Latino Community

The Trump Administration has enacted numerous changes that affect federal policies around immigration, education, health, energy, trade, foreign policy, and many others. This plenary will provide elected officials from all levels of government with an overview of the federal landscape and how these changes affect the Latino community.

10:00 AM - 10:30 AM EDT

NALEO Marketplace & Networking Break

NALEO Service Project

10:30 AM - 12:00 PM EDT

Financial Track: Investing in Latinas Through Financial Empowerment & Entrepreneurship

Latinas are a powerful force in our homes, workplaces, and the U.S. economy, with high rates of business ownership and economic output growing over 51 percent since 2010. However, financial wealth-building remains a challenge for many Latino families. This session will equip elected officials with strategies to support Latina economic empowerment through financial literacy and entrepreneurship, fostering long-term financial security and economic resilience.

Governance Track: Land Use 101

Governance Track: Land Use 101

Among the most critical responsibilities for policymakers is determining how the physical configuration of their communities will change, develop, and adapt to meet their residents' present and future needs. This session will provide a high-level overview of land use planning and will highlight best practices and innovative strategies communities are using to repurpose, develop, or sell underutilized land for better use.

Health Track: Meeting the Health Needs of Veterans & First Responders

Military personnel and first responders experience tremendous physical and mental strain in the line of duty. The U.S. is home to nearly 1.5 million Latino veterans and 265,000 Latino first responders. Service to community and country leads to high incidence of mental health issues, injuries, and exposure to hazardous materials. This session will provide an overview of the health status of veterans and first responders. It will also provide participants with innovative policy solutions and best practices to care for these frontline heroes.

Governance Track: Professional Development for Latinos in the Corporate & Public Sector

Latino professional organizations have long held a role in cultivating talent for the corporate and public sectors. Latinos are projected to make up over 20 percent of the labor force by 2030, increasing the need for professional development tailored to the community. In this session, participants will hear from a panel of leaders who head professional and leadership organizations that develop the Latino workforce across different sectors.

12:30 PM - 2:00 PM EDT

National Leadership Luncheon & Plenary: Separating Fact from Fiction: A Postmortem on the Latino Vote of 2024

In November 2024, Latinos once again played a decisive role in the presidential election and local and state contests. NALEO Educational Fund projected that at least 17.5 million Latinos nationwide would vote, representing a 6.5 percent increase from 2020 Latino turnout. This plenary will provide a profile of the current Latino electorate, address the Latino community's impact on the 2024 election, and what steps candidates up and down the ballot can take to secure the Latino vote in 2026 and beyond.

2:30 PM - 4:00 PM EDT

Health Track: Strengthening Mental Health Support for Latino Communities

Mental health is essential to overall well-being, yet many Latinos face barriers to care due to stigma, cost, and limited access to services. As Latino policymakers shape and improve healthcare systems, they play a key role in expanding access to services, strengthening the healthcare workforce, and addressing disparities. This session will explore the factors affecting Latino mental health and explore strategies to improve health outcomes.

Emergency Response to Weather Related Events

Response and recovery efforts in the early days and weeks following a disaster can drastically impact the speed and sustainability of community recovery and resiliency. This session will explore long-term policy challenges, opportunities, and strategies communities can implement before an emergency for more effective disaster response and recovery.

Education Track: Fostering School Board and Superintendent Relations

Education Track: Fostering School Board and Superintendent Relations

Between 2019 and 2024, more than 40 percent of school districts experienced a superintendent's departure, an alarming turnover pattern that has lasting impacts on school district systems, staff, and students. In this session, participants will learn strategies that governing board members can employ to help cultivate and support superintendents' leadership.

Thursday, Jul 24, 2025

9:00 AM - 10:00 PM EDT

Breakfast

10:30 AM - 12:00 PM EDT

National Leadership Plenary: Commemorating the 60th Anniversary of the Voting Rights Act of 1965

Sixty years ago, on August 6, 1965, President Lyndon. B. Johnson signed the Voting Rights Act of 1965 (VRA) into law. The VRA was landmark legislation aimed at eliminating practices that had historically disenfranchised Black Americans, preventing them from registering to vote and casting ballots. This federal legislation helped transform political power in the South. In 1975, the VRA was amended to strengthen its protections for Latinos, Asian Americans, and Native Americans, including requirements to provide language access and assistance in elections for these groups. During this commemoration, panelists will reflect on the 60 years since the signing of the VRA and the current and future state of voting rights.

12:30 PM - 2:00 PM EDT

Networking Luncheon: A Taste of the South

As we conclude the NALEO 42nd Annual Conference, enjoy some delectable dishes from the Peach State in this relaxed, Southern hospitality experience celebrating Latino leadership from across the country.

CONTACT US

naleoconference@naleo.org

POWERED BY eSHOW

© Copyright 2025. All Rights Reserved.

ATTACHMENT 2

Council Conferences/Trainings FY 2025-26 Budget Tracking Sheet

Mayor Montano				
	Training/Travel Event	FY24-25 Amount Expended/Estimates	Total $ 3,200.00	Remaining Balance $ 6,800.00
1	NALEO 42nd Annual Conference July 22-24, 2025	$3,200.00	estimated	

Vice Mayor Barbadillo				
	Training/Travel Event	FY24-25 Amount Expended/Estimates	Total $ 0.00	Remaining Balance $ 10,000.00

Councilmember Chua				
	Training/Travel Event	FY24-25 Amount Expended/Estimates	Total $ 0.00	Remaining Balance $ 10,000.00

Councilmember Lien				
	Training/Travel Event	FY24-25 Amount Expended/Estimates	Total $ 0.00	Remaining Balance $ 10,000.00

Councilmember Lam				
	Training/Travel Event	FY24-25 Amount Expended/Estimates	Total $ 0.00	Remaining Balance $ 10,000.00

CITY OF MILPITAS
AGENDA REPORT
(AR)

Item Title:	**Adopt a Resolution Releasing Unclaimed Checks with a Value less than $15 in the aggregate amount of $308.54 (Staff Contact: Luz Cofresí-Howe, 408-586-3111)**
Category:	Consent Calendar-Leadership and Support Services
Meeting Date:	4/15/2025
Recommendation:	(1) Adopt a resolution releasing Unclaimed Checks with a value less than $15 and (2) Transfer a total of $308.54 in Unclaimed Checks to the General Fund.

BACKGROUND:
According to the City of Milpitas' Standard Operating Procedure (SOP) No. 26-1, which conforms with California Government Code Section 50055, unclaimed checks, and credits of less than $15, or any amount if the depositor's name is unknown, which remain unclaimed for more than one year may be transferred to the General Fund by authorization of the City Council.

ANALYSIS:
The City has thirty-two (32) unclaimed checks of less than $15 in the aggregate amount of $308.54 related to Refund of overpayment of Business License or Recreation Activity Fees on classes offered by the Recreation and Community Services Department. All the funds listed in Exhibit A of the attached resolution are older than February 2024 and have remained unclaimed for more than one year. Consistent with SOP No. 26-1, staff recommends the City Council adopt a resolution authorizing the transfer of the unclaimed checks amount to the General Fund.

POLICY ALTERNATIVE(S):

Alternative 1: Do not approve the proposed recommendation to release Unclaimed Checks.
Pros: None
Cons: Compliance with the City of Milpitas' Standard Operating Procedure (SOP) No. 26-1, which in turn conforms with California Government Code Section 50055.
Reason for Not Recommending: The transfer to the General Fund of the Unclaimed Checks which remain unclaimed for more than one year is in accordance with the City of Milpitas' Standard Operating Procedure (SOP) No. 26-1, which conforms with California Government Code Section 50055.

FISCAL IMPACT:
The recommended action will increase General Fund revenues by $308.54 in FY24-25.

California Environmental Quality Act (CEQA):
The action being considered is exempt from environmental review pursuant to CEQA Guideline 15378(b)(4) as a governmental fiscal activity without a commitment to any project that would result in a potentially significant impact on the environment.

RECOMMENDATION:
(1) Adopt a resolution releasing Unclaimed Checks with a value less than $15 and
(2) Transfer a total of $308.54 in Unclaimed Checks to the General Fund.

Attachment(s):
(a) Resolution
(b) Exhibit A – Finance Operation Accounts Unclaimed Checks of less than $15 and one year or older

RESOLUTION NO. _____

A RESOLUTION OF THE CITY COUNCIL OF THE CITY OF MILPITAS RELEASING UNCLAIMED CHECKS

WHEREAS, the checks on the list attached hereto as **Exhibit A** have been outstanding and unclaimed for more than one year; and

WHEREAS, the amounts on the checks on the list attached hereto as **Exhibit A** are each less than $15, or for an amount in which the depositor's name is unknown.

NOW, THEREFORE, the City Council of the City of Milpitas hereby finds, determines, and resolves as follows:

1. The City Council has considered the full record before it, which may include but is not limited to such things as the staff report, testimony by staff and the public, and other materials and evidence submitted or provided to it. Furthermore, the recitals set forth above are found to be true and correct and are incorporated herein by reference.

2. The total amount of $308.54 of the unclaimed checks on the list attached hereto as **Exhibit A** shall be transferred to the General Fund in FY24-25, in accordance with Section 50055 of the California Government Code.

PASSED AND ADOPTED this on _____ day of _____, 2025 by the following vote:

AYES:

NOES:

ABSENT:

ABSTAIN:

ATTEST:

_____
Suzanne Guzzetta, City Clerk

APPROVED:

_____
Carmen Montano, Mayor

APPROVED AS TO FORM:

_____
Christopher Creech, Acting City Attorney

Exhibit A

UNCLAIMED CHECKS

- Amount Less Than $15.00
- No Later than February 2024

Check No.	Date		Amount
409140	2/17/2023	$	5.00
409101	2/17/2023	$	6.25
409161	2/17/2023	$	5.00
409211	2/24/2023	$	6.00
409240	2/24/2023	$	6.25
409615	3/10/2023	$	13.75
410148	4/7/2023	$	13.92
410706	5/12/2023	$	8.50
410726	5/12/2023	$	10.00
411062	5/26/2023	$	13.00
412014	7/14/2023	$	5.21
412457	7/28/2023	$	10.50
412266	7/28/2023	$	10.50
412416	7/28/2023	$	10.50
412333	7/28/2023	$	10.50
412289	7/28/2023	$	10.50
412385	7/28/2023	$	10.50
412296	7/28/2023	$	10.50
412415	7/28/2023	$	10.50
412699	8/11/2023	$	6.40
412612	8/11/2023	$	9.89
413310	9/15/2023	$	10.37
413318	9/15/2023	$	10.37
413251	9/15/2023	$	10.37
413534	10/6/2023	$	12.50
413552	10/6/2023	$	10.00
413774	10/13/2023	$	14.40
414006	10/27/2023	$	8.12
414340	11/17/2023	$	11.00
414916	1/5/2024	$	8.50
415208	1/26/2024	$	11.78
415383	2/9/2024	$	7.96
	TOTAL	**$**	**308.54**

CITY OF MILPITAS
AGENDA REPORT
(AR)

Item Title:	**Receive and Approve the Calendar Year 2024 Controlled Equipment Annual Report (Staff Contact: Jared Hernanzez, Chief of Police, 408-586-2406)**
Category:	Consent Calendar-Public Safety
Meeting Date:	4/15/2025
Recommendation:	Receive and approve the Calendar Year 2024 Controlled Equipment Annual Report.

BACKGROUND:

On September 30, 2021, California Governor Gavin Newsom approved Assembly Bill 481, requiring California law enforcement agencies to obtain approval of a Military Equipment Use Policy from their applicable governing body (City Council) before taking actions related to the funding, acquisition, or use of controlled equipment. Assembly Bill 481 allows the governing body to approve the funding, acquisition, and use of controlled equipment (Military Equipment) within its jurisdiction if the equipment meets specified standards.

The Controlled Equipment Use Policy and an Annual Controlled Equipment Use Report are subject to annual review to affirm the criteria outlined in Assembly Bill 481 have been met. In addition, Assembly Bill 481 requires the publication of the Controlled Equipment Use Policy and a Controlled Equipment Use report on the Department's website annually and at least thirty (30) days before a mandated publicly available meeting.

California Government Code section 7072 requires an annual report within a year of the policy approval and annually after that for as long as the controlled equipment is in use. The annual report must contain the following information: (1) a summary of how the equipment was used and the purpose of its use; (2) a summary of any complaints or concerns from members of the public about the equipment; (3) the results of an internal audit, including any information about violations of the equipment use policy and any actions taken in response; (4) the total annual cost for each type of equipment, including acquisition, personnel, training, transportation, maintenance, storage, upgrade, and other ongoing expenses, and from what source funds will be provided for the controlled equipment in the calendar year following submission of the annual report; (5) the quantity possessed for each type of controlled equipment; and (6) if the law enforcement agency intends to acquire additional controlled equipment in the next year, and the quantity sought for each type of qualifying equipment.

ANALYSIS:

The Milpitas Police Department is committed to protecting lives and property by working with the Milpitas community and providing professional and responsive police services. To accomplish its mission effectively and safely, the Milpitas Police Department possesses and utilizes specific specialized equipment (controlled equipment) to safeguard the Milpitas community and protect the City's first responders. While the City's inventory of controlled equipment varies, the mere possession of this equipment does not warrant its use. The merits and the totality of the circumstances of each unique incident are considered before controlled equipment is utilized in compliance with department policy and law.

The term "military equipment," as used in Assembly Bill 481, does not necessarily indicate that the equipment is or has been used by the military. Many items defined as "military equipment" by the bill are often used by law enforcement to preserve life and enhance public and officer safety while remaining prepared to handle the various lethal and non-lethal challenges facing our communities. The Milpitas Police Department's use of controlled equipment is consistent with overall best practices employed by police departments nationwide. Items used by the Milpitas Police Department that are considered controlled equipment under Assembly

Bill 481 include, but are not limited to, emergency response equipment such as command vehicles and armored rescue vehicles, less lethal shotguns, less lethal 40mm projectile launchers, or precision weapons such as rifles, unmanned aircraft systems, and other select items.

The 2024 Annual Controlled Equipment Use Report contains a summary of the equipment usage guidelines, inventory, fiscal impact, complaints, and reported community concerns for calendar year 2024 (January 1, 2024, through December 31, 2024). Although controlled equipment was deployed during the year, it was rarely utilized. The Milpitas Police Department received no complaints from the community about its controlled equipment or policies related to its use. Furthermore, an internal audit of the controlled equipment revealed no policy violations for the storage or use of controlled equipment. The impact of controlled equipment-related expenses on the operating budget was negligible; the total annual costs related to controlled equipment for 2024 were approximately $32,063.34 or 0.077% of the Police Department's overall operating budget.

The draft 2024 Annual Controlled Equipment Use Report was presented at the Public Safety & Emergency Preparedness Commission public meeting on March 20, 2025 by the Police Department liaison. The commission members did not respond with any questions/concerns related to the 2024 Annual Controlled Equipment Use Report nor the Controlled Equipment Use Policy. No members of the public commented on the item.

To continue providing adequate police services and maximize the department's ability to keeping the community and officers safe, the Milpitas Police Department will procure the following controlled equipment, previously approved by Council, for calendar year 2025:

- Four (4) DJI Avata Unmanned Aircraft System (UAS) drones

The continued access to and use of this equipment is vital in ensuring our officers have the appropriate tools to de-escalate situations, preserve life, ensure safety for all people in Milpitas, and protect civil liberties.

POLICY ALTERNATIVE(S):
Alternative 1: Do not accept and approve the 2024 Annual Controlled Equipment Use Report.
Pros: There are no identified benefits to this alternative.
Cons: The City would not be in compliance with California State Law Assembly Bill 481.

Reason for Not Recommending: The Milpitas Police Department use of controlled equipment is consistent with overall best practices employed by police departments nationwide and in line with department policy. Not accepting the report would not comply with annual reporting requirements of AB481.

FISCAL IMPACT:
There is no additional fiscal impact associated with accepting and approving the 2024 Annual Controlled Equipment Use Report.

CALIFORNIA ENVIRONMENTAL QUALITY ACT (CEQA):
The action is continuing administrative or maintenance activity and is not a project pursuant to Cal. Code Regs., tit. 14, § 15378.

RECOMMENDATION:
Receive and approve the Calendar Year 2024 Controlled Equipment Annual Report.

ATTACHMENT(S):
(a) 2024 Controlled Equipment Annual Report
(b) PSEPC Draft Meeting Minutes 3.20.25

Milpitas Police Department

Controlled Equipment Annual Report

January 1, 2024, to December 31, 2024

Chief Jared Hernandez - 1275 North Milpitas Boulevard, Milpitas, Ca 95035 - www.milpitas.gov

Table of Contents

Executive Summary 2
Introduction 4
Summary of Controlled Equipment Usages 5
Current Inventory of Controlled Equipment 6
Controlled Equipment Categories 7
Unmanned Aerial Systems (UAS) 8
Robots 12
Armored Vehicle 14
Mobile Incident Command Vehicle 16
40 MM Less-Lethal Launchers and Munitions 18
Less-Lethal Shotgun and Munitions 24
Less-Lethal Pepperball Launcher and Munitions 26
Diversionary Devices 31
Rifles, Munitions, and Accessories 34
Chemical Agents and Smoke Canisters 43
Breaching Tools 48
Training Summary 53
Training Costs 53
Fiscal Impact 55
Projected Acquisitions for 2025 56
Consumable Controlled Equipment 56
Non-Consumable Controlled Equipment 57
Department Transparency 58
Controlled Equipment Coordinator Report 59
Conclusion 60
Appendix 61
Definitions 61
Policy - Controlled Equipment (Military Equipment) 62

Executive Summary

On September 30, 2021, California Governor Gavin Newsom approved Assembly Bill 481 requiring California law enforcement agencies to obtain approval of a Military Equipment Use Policy by their applicable governing body (City Council) prior to taking certain actions related to the funding, acquisition, or use of controlled equipment.

Assembly Bill 481 allows the governing body to approve the funding, acquisition, and use of controlled equipment ("Military Equipment") within its jurisdiction if the equipment meets specified standards. The Controlled Equipment Use Policy and an Annual Controlled Equipment Use Report is subject to annual review to affirm the criteria outlined in Assembly Bill 481 have been met.

Assembly Bill 481 requires the publication of the Controlled Equipment Use Policy and a Controlled Equipment Use Report on the Department's website annually and at least thirty (30) days prior to a mandated publicly available meeting.

California Government Code section 7072 requires an annual report within a year of the policy approval and annually after that for as long as the controlled equipment is in use. The annual report must contain the following information:

(1) A summary of how the equipment was used and the purpose of its use.

(2) A summary of any complaints or concerns from members of the public about the equipment.

(3) The results of an internal audit, including any information about violations of the equipment use policy, and any actions taken in response.

(4) The total annual cost for each type of equipment, including acquisition, personnel, training, transportation, maintenance, storage, upgrade, and other ongoing expenses; and from what source funds will be provided for the controlled equipment in the calendar year following submission of the annual report.

(5) The quantity possessed for each type of controlled equipment.

(6) If the law enforcement agency intends to acquire additional controlled equipment in the next year, and the quantity sought for each type of qualifying equipment.

The Police Department shall hold at least one well-publicized and conveniently located community engagement meeting, at which the public may discuss and ask questions regarding the annual report, the law enforcement agency's funding, acquisition, and/or the use of the controlled equipment.

The Milpitas Police Department recognizes the public's ongoing interest in how controlled equipment is used to protect our community and is committed to maintaining our community's trust in providing professional and responsive police services. As such, the Milpitas Police Department has authored the following comprehensive Annual Controlled Equipment Use Report to remain transparent with our community and in accordance with annual reporting requirements set forth by applicable California Law.

Introduction

The Milpitas Police Department is committed to the protection of lives and property by working with our community and providing professional and responsive police services. To accomplish our mission effectively and safely, the Milpitas Police Department possesses and utilizes certain specialized equipment (controlled equipment) to safeguard the citizens of Milpitas and protect our first responders. While our inventory of controlled equipment varies, the mere possession of this equipment does not warrant its use. The merits and a totality of the circumstances of each unique incident are considered before controlled equipment is utilized in compliance with department policy and law.

The term “military equipment,” as used in Assembly Bill 481, does not necessarily indicate the equipment is, or has been used, by the military. Many items defined as “military equipment” by the bill are more often used by law enforcement to preserve life and enhance public and officer safety while remaining prepared to handle the various lethal and non-lethal challenges facing our communities. The Milpitas Police Department’s use of controlled equipment is consistent with overall best practices employed by police departments throughout the country.

Items used by the Milpitas Police Department that are considered controlled equipment under Assembly Bill 481 include, but are not limited to, emergency response equipment such as command vehicles and armored rescue vehicles, less lethal shotguns, less-lethal 40mm projectile launchers, precision weapons such as rifles, unmanned aircraft systems, and other select items. The continued access to, and use of, this equipment is vital in ensuring our officers have the appropriate tools necessary to de-escalate situations, preserve life, ensure safety for all people, and protect civil liberties.

This Annual Controlled Equipment Use Report outlines a summary of the equipment usage guidelines, inventory, fiscal impact, complaints, and reported community concerns for calendar year 2024 (January 1, 2024, through December 31, 2024).

Summary of Controlled Equipment Usages

The Milpitas Police Department provides law enforcement services twenty-four hours a day, seven days a week, serving a city population of over 81,000. The daytime population of Milpitas increases to over 98,000 people. The Department is committed to de-escalating situations, and using force is reserved for instances where less intrusive options are not feasible. In 2024, the Milpitas Police Department responded to approximately 66,953 calls for service. Of those calls for service, officers used force on only 11 occasions, representing 0.016% of the total calls for service. Officers used controlled equipment in 2 cases involving the use of force, specifically less lethal 40mm projectile rounds (i.e. impact sponge round, bean bag, etc.).

Police events and critical incidents are unpredictable and often very dynamic. The availability and use of specific equipment are necessary for incident commanders, officers, and specialized units to resolve incidents safely and effectively. It is incumbent upon incident commanders, supervisors, individual officers, and specialized teams to recognize the circumstances wherein specialized equipment should be deployed and to utilize the equipment within the confines of department policy and state law. Each use of controlled equipment is reviewed to ensure it was used properly and justly based on the totality of the circumstances, public safety, officer safety, civil rights, state law, and information available at the time of use.

Current Inventory of Controlled Equipment

The Milpitas Police Department is committed to remaining transparent about the Department's controlled equipment inventory and the sharing of the equipment's capabilities, uses, and other related information with our community and elected officials. The data provided in this report is accurate as of January 2025, however, inventory may have fluctuated by the time of this report's publication.

The inventory of controlled equipment, particularly consumable material (ammunition, diversionary devices, munitions, etc.) may fluctuate due to a variety of factors including but not limited to operational usage, operational deterioration, training, maintenance, expiration and replenishment guidelines.

The following is a list of the various types, descriptions, and guidelines for usage of controlled equipment currently employed by the Department:

(***NOTE:** The descriptions and source photos contained in this report are for controlled equipment descriptive purposes only and are not an endorsement by the City of Milpitas or the Milpitas Police Department of a product or vendor.)

Controlled Equipment Categories

Assembly Bill 481 created Government Code 7070 which designated 15 categories of items deemed “military” or more accurately defined as controlled equipment:

*	**Category 1:**	Unmanned, remotely piloted, powered aerial or ground vehicles
*	**Category 2:**	Mine-resistant ambush-protected vehicles or armored personnel carriers
*	**Category 3:**	High mobility multipurpose wheeled vehicles (HMMWV), two-and-one-half-ton trucks, five-ton trucks, or wheeled vehicles that have a breaching or entry apparatus attached
	Category 4:	Tracked armored vehicles that provide ballistic protection to their occupants
*	**Category 5:**	Command and control vehicles that are either built or modified to facilitate the operational control and direction of public safety units
	Category 6:	Weaponized aircraft, vessels, or vehicles of any kind
*	**Category 7:**	Battering rams, slugs, and breaching apparatuses that are explosive in nature
	Category 8:	Firearms of .50 caliber or greater, excluding standard-issue shotguns and standard-issue shotgun ammunition
	Category 9	Ammunition of .50 caliber or greater, excluding standard-issue shotgun ammunition
*	**Category 10:**	Specialized firearms and ammunition of less than .50 caliber, including firearms and accessories identified as assault weapons in Penal Code § 30510 and Penal Code §30515, with the exception of standard-issue handguns
*	**Category 11:**	Any firearm or firearm accessory that is designed to launch explosive projectiles
*	**Category 12:**	Noise-flash diversionary devices and explosive breaching tools, munitions containing tear gas and pepper balls, excluding standard, service issued handheld pepper spray.
	Category 13:	TASER® Shockwave, microwave weapons, water cannons, and long-range acoustic devices
*	**Category 14:**	Kinetic energy weapons and munitions
	Category 15:	Any other equipment as determined by a governing body or a state agency to require additional oversight

*** Indicates a category of controlled equipment previously approved by the governing body and utilized by the Milpitas Police Department.**

Unmanned Aerial Systems (UAS) (Category 1)

An unmanned aerial system of any type that can sustain direct flight, whether remotely controlled or via pre-programing, and all the attached systems are designed for gathering information via photography, recording, or any other means.

Capability: The Milpitas Police Department uses UAS of varying sizes and capabilities to enhance public safety. The UAS can be deployed when an overhead view would assist officers or incident commanders with planning and responding to a situation. Types of situations include but are not limited to, infrastructure damage assessments, major traffic collision investigations, search for missing persons, natural disaster management, crime scene photography, SWAT, tactical or other public safety and life-preservation missions, and/or in response to specific requests from local, State, or Federal fire authorities for fire response and/or prevention. All UAS used by the Department is used in compliance with all federal, state, and local laws.

Usage: Use is established under Milpitas Policy Manual Section 456 and FAA Regulation 14 CFR Part 107. It is the policy of the Milpitas Police Department to utilize UAS only for official law enforcement purposes, and in a manner that respects the privacy of our community, pursuant to State and Federal law. UAS usages include collection of evidence in the form of aerial photography/video in support of an investigation (i.e., shooting scenes, homicide scenes); support of SWAT and Patrol during high-risk, tactical, or other public safety life preservation missions (i.e., interior visual assessments of structures or outdoor areas to gain intelligence prior to officers entering a dwelling or contacting a potentially armed or a resistive subject that may be hiding); to conduct aerial searches for missing persons; and provide aerial observation to assist in managing natural disasters (i.e., fires, floods, storms) or in any other manner to preserve life and enhance public safety. In 2024, the Milpitas Police Department conducted 287 UAS flights. Of these, 157 were related to criminal investigations or incidents, 71 supported non-criminal activities, such as demonstrations/teen academies, and 59 were used for training purposes.

Training Requirements: All Department UAS operators are licensed by the Federal Aviation Administration for UAS operation. Although not required by POST or the FAA, officers attend a 20-hour internal training course. Course topics include nomenclature, proper and safe flying techniques, privacy concerns, laws, and review of the Department's UAS policy.

The Department currently utilizes the following UAS:

DJI Mavic Mini

Cost	$500 each
Quantity	2
Lifespan	3-5 Years
Funding Source	Grant Funding

Manufacturer: DJI

Manufacturer Description: Miniature UAS that weighs approximately 249 grams and can record video and audio with approximately 30 minutes of flight time. This is a remotely operated battery-powered aircraft designed to be operated within sight of the operator or a spotter. Each aircraft is equipped with a camera capable of relaying a real-time image back to the operator.

DJI Mavic Enterprise Duals

Cost	$3,500 each
Quantity	4
Lifespan	3-5 Years
Funding Source	Grant Funding

Manufacturer: DJI

Manufacturer Description: UAS that has a color and infrared camera as well as audible speaker and light. Capable of video recording and weighs 899 grams, approx. 30 minutes of flight time. This is a remotely operated battery-powered aircraft designed to be operated within sight of the operator or a spotter. Each aircraft is equipped with a camera capable of relaying a real-time image back to the operator.

DJI Matrice 210 V2

Cost	$10,410
Quantity	1
Lifespan	3-5 Years
Funding Source	Grant Funding

Manufacturer: DJI

Manufacturer Description: UAS that has a color and infrared camera as well as audible speaker and light. Capable of video recording and weighs 899 grams, approx. 30 minutes of flight time. This is a remotely operated battery-powered aircraft designed to be operated within sight of the operator or a spotter. Each aircraft is equipped with a camera capable of relaying a real-time image back to the operator.

DJI Matrice 300 RTK

Cost	$11,349
Quantity	1
Lifespan	3-5 Years
Funding Source	Grant Funding

Manufacturer: DJI

Manufacturer Description: UAS that is foul weather capable and has dual gimbal, has an IR camera, zoom camera and light. Has video recording capabilities and is approx. 14 pounds. Has 55 minutes of flight time. This is a remotely operated battery-powered aircraft designed to be operated within sight of the operator or a spotter. Each aircraft is equipped with a camera capable of relaying a real-time image back to the operator.

DJI Matrice 30 Series

Cost	$13,198
Quantity	1
Lifespan	3-5 Years
Funding Source	Grant Funding

Manufacturer: DJI

Manufacturer Description: UAS that is an all-weather drone and integrates multiple high-performance sensors into a light weight and portable body. This is a remotely operated battery-powered aircraft designed to be operated within sight of operator or a spotter. Each aircraft is equipped with digital video streaming technology capable of relaying a real-time image back to the operator, and obstacle detection sensors. This UAS weighs 3770g and has a maximum flight time of 41 minutes.

Autel Robotics EVO II Dual 640 - Refurbished

Cost	$0
Quantity	1
Lifespan	3-5 Years
Funding Source	N/A

Manufacturer: Autel Robotics

Manufacturer Description: The EVO II Dual has about 32-34 minutes of flight time per battery. The Orange color of the Dual is great for functionality and ease of operation and is easier to see in the sky. This is a remotely operated battery-powered aircraft designed to be operated within sight of the operator or a spotter. Each aircraft is equipped with a camera capable of relaying a real-time image back to the operator.

Robots (Category 1)

A machine that is capable of being controlled remotely and can be deployed in-lieu of a human to gather visual and auditory intelligence, as well as conduct limited physical manipulation of items.

Capability: Robots can be used to reduce risk to human life in dangerous or potentially volatile situations. They are also used in tactical support of special operations and can be used to acquire visual/audio intelligence, deliver de-escalation tools such as a Crisis Negotiation Team phone, open doors, and clear buildings without risk to human life.

Usage: It is the policy of the Milpitas Police Department to utilize a robot only for official law enforcement purposes, and in a manner that respects the privacy of our community, pursuant to State and Federal law. Use is authorized by the Division Captain or designee.

Training Requirements: Only assigned operators who have completed the in-house required training shall be permitted to operate the robots. Training topics include nomenclature, operation techniques, and practical exercises.

The Department currently utilizes the following Robots:

Robotex Avatar II

Cost	$19,406
Quantity	1
Lifespan	8-10 Years
Funding Source	Grant Funding

Manufacturer: Robotex

Manufacturer Description: The AVATAR II enables law enforcement to remotely inspect dangerous situations and gather video and audio intelligence, including direct-to-unit video and audio recording, a touchscreen display, increased durability, and secure Wi-Fi networking. With these capabilities' officers will be better equipped to remotely gather intelligence and keep themselves and their teams safe from harm.

ICOR Mini Caliber

Cost	$48,500
Quantity	1
Lifespan	8-10 Years
Funding Source	General Funds

Manufacturer: ICOR

Manufacturer Description: The Mini Caliber is a lightweight, modular portable robot designed for rapid deployment, it is simple to operate and quick to deploy for searching rooms, hallways, stairwells, and confined spaces. It also includes an extendible rotating claw arm that simplifies opening door handles, providing protection and safety to their operators.

Armored Vehicle (Categories 2 & 3)

Commercially produced 4-wheel drive vehicle designed for law enforcement that provides protection against bullets, shell fragments, and other projectiles.

Capability: The Medevac is primarily used by the Special Weapons and Tactics Team (SWAT) to safely transport personnel to and from critical incidents, extract citizens from volatile situations, high-risk rescue operations, training, provide emergency medical staff and/or Tactical Emergency Medicine (TEM) personnel a safe working environment, and to delivering equipment in high-risk environments. The Medevac can also be used to conduct rescue missions during disasters. Additionally, the vehicle is utilized for community engagement efforts and other applications deemed appropriate.

Usage: Use is established under Milpitas Policy Manual Section 707. It is the policy of the Department to utilize the armored vehicle only for official law enforcement purposes, and pursuant to State and Federal law.

Training Requirements: All drivers/operators shall attend formalized instruction and be trained in vehicle operations and practical driving techniques. POST certified driving instructors provide training consisting of safe driving practices and proper operation of the vehicle's equipment.

The Department currently utilizes the following Armored Vehicle:

2018 LENCO Bearcat MEDEVAC, G2

Cost	$388,800
Quantity	1
Lifespan	25 Years
Funding Source	Capital Improvement

Manufacturer: LENCO

Manufacturer Description: The Lenco BearCat Medevac, also known as the MedCat, was designed to meet the combined requirements of SWAT & Tactical Emergency Medical Service Teams. The Medevac can be used as an armored Response & Rescue SWAT truck for dangerous callouts and is equipped to provide Tactical EMS with a safe & effective environment to deal with trauma cases. It seats 10-12 personnel with open floor plan that allows for rescue of down personnel. It can stop various projectiles, which provides greater safety to citizens and officers beyond the protection level of shield and personal body armor.

Mobile Incident Command Vehicle (Category 5)

A completely self-contained command post designed to provide shelter, access to department computers, and restroom facilities for extended events. This vehicle can also be used to manage/facilitate pre-planned or significant events, which require on-site planning and incident command personnel.

Capability: As a mobile base of operation, this vehicle contains specialized command, control, and communications equipment that can be used during critical incidents, large events, natural disasters, and community events. The replacement command vehicle (anticipated delivery February 2024) will be equipped to function as a fully operational mobile Public Safety Answering Point (PSAP) and will serve as a backup to the existing Dispatch Center in the Police Department.

Usage: The command vehicle shall be used by trained personnel in a manner consistent with Department policy and training. Furthermore, only personnel who have completed the Departmental Training and who are properly licensed will be allowed to drive the command vehicle.

Training Requirements: All drivers/operators shall attend formalized instruction and be trained in vehicle operations and practical driving techniques. POST certified driving instructors provide training consisting of safe driving practices and proper operation of the vehicle's equipment.

The Department currently operates the following MIC's:

Mobile Incident Command Vehicle

Cost	$1,250,000
Quantity	1
Lifespan	25 Years (Chassis) 6 Years (IT Systems)
Funding Source	Capital Improvement Grant, ARPA

Manufacturer: LDV, Inc.

Manufacturer Description: The Mobile Emergency Operations Center (MEOC) will be a fully functioning Mobile Public Safety Answering Point (PSAP) and serve as a backup to our existing Dispatch Center. The MEOC will also be a shared asset used by the Police and Fire Departments during critical incidents, preplanned large events, searching for missing persons, natural disasters, and community events. This vehicle was delivered in February 2024.

40 MM Less-Lethal Launchers and Munitions (Categories 11, 12, & 14)

A single-shot impact launcher capable of firing an array of less-lethal 40mm rounds.

Capability: De-escalate situations using less-lethal force and gain compliance from a safe distance. 40MM Less-Lethal Launchers have an effect range of up to 20 yards.

Usage: The 40mm less-lethal launcher may be deployed to gain compliance or de-escalate conflicts to help prevent a situation from becoming a lethal force situation. The system's effectiveness provides time and distance between officers and a suspect, reducing the immediacy of the threat and allows opportunity for further de-escalation. This system can be used to address self-destructive/suicidal, dangerous, and/or combative individuals; to gain a tactical advantage from a distance (i.e., breaking a window to get an unobstructed view of an individual or disabling a security camera); against potentially vicious animals; and for riot/crowd control and/or civil unrest incidents where the use of the 40mm is objectively reasonable.

Training Requirements: Sworn members utilizing 40MM less-lethal chemical agents or impact rounds are trained in their use by POST-Certified less-lethal chemical agent's instructors. Training includes a review of the Departments Use of Force Policy, nomenclature, familiarization of the system and a qualification course.

The Department utilizes the following 40 MM Less-Lethal Launcher and Munitions:

Defense Technologies 40 MM Single Shot Launcher #1425

Cost	$810 each
Quantity	6
Lifespan	25 Years
Funding Source	General Funds

Manufacturer: Defense Technology

Manufacturer Description: The 40MM Single Launcher is a tactical single-shot launcher that features an adjustable Integrated Front Grip (IFG) with a rail-mounted holographic sight. It will fire standard 40mm less lethal ammunition, up to 4.8 inches in cartridge length. It will launch a 40MM less lethal round up to 131 feet and is only authorized to be used by trained personnel.

The Department currently possesses the following 40mm munitions:

Defense Technology 40mm Exact Impact Sponge Round #6325

Cost	$18 each
Quantity	0 of 20
Lifespan	5 Years
Funding Source	General Funds

Manufacturer: Defense Technology

Manufacturer Description: A less-lethal 40mm lightweight plastic and foam projectile fired from a single or multi-round purpose built 40mm launcher with a rifled barrel at 325 FPS. The 30-gram foam projectile delivers 120 ft/lbs. of energy on impact. The 40mm Exact Impact Sponge Round provides accurate and effective performance when fired from the approved distance of not less than five (5) feet and as far as 131 feet from the target.

Defense Technology 40MM Direct Impact Marking Round #6326

Cost	$30 each
Quantity	7 of 7
Lifespan	5 Years
Funding Source	General Funds

Manufacturer: Defense Technology

Manufacturer Description: A less-lethal 40MM lightweight plastic and crushable foam projectile fired from a single or multi-round purpose-built 40mm launcher with a rifled barrel at 295 FPS. The green foam nose indicates that the round contains a marking agent.

Defense Technology 40MM Direct Impact Reloadable Training Kit #6530

Cost	$1300 each
Quantity	1
Lifespan	No Expiration
Funding Source	General Funds

Manufacturer: Defense Technology

Manufacturer Description: The 250-piece Direct Impact Reloadable Training Kit allows realistic training to be conducted at a fraction of the cost of using operational rounds. These reusable projectiles can be reloaded by hand in the field in less than 10 seconds without the need for presses or other reloading equipment. These rounds are not for use on humans.

Defense Technology Spede-Heat 40MM Long Range, CS, Round #6182

Cost	$30 each
Quantity	40 of 40
Lifespan	5 Years
Funding Source	General Funds

Manufacturer: Defense Technology

Manufacturer Description: The SPEDE-HEAT CS Long-Range Munitions delivers one chemical canister of CS agent from a 40 mm launcher down range up to 150 yards. The Spede-Heat is a pyrotechnic round designed specifically for outdoor use in riot situations with a high-volume continuous burn that expels its payload in approximately 20-40 seconds from a single source. The Spede-Heat family may be used to conceal tactical movement.

Defense Technology Ferret 40MM Powder Barricade Round CS #1292

Cost	$30 each
Quantity	43
Lifespan	5 Years
Funding Source	General Funds

Manufacturer: Defense Technology

Manufacturer Description: A less lethal 40MM round used to penetrate barriers, such as windows, hollow core doors, wallboard, and thin plywood. Upon impacting the barrier, the nose cone ruptures and instantaneously delivers a small chemical payload inside of a structure or vehicle. In a tactical deployment situation, the 40mm Ferret is primarily used to dislodge barricaded subjects from confined areas. Its purpose is to minimize the risks to all parties through pain compliance, temporary discomfort, and/or incapacitation of potentially violent or dangerous subjects.

Defense Technology Ferret 40MM Powder Barricade Training Round Inert #1293

Cost	$23 each
Quantity	14
Lifespan	5 Years
Funding Source	General Funds

Manufacturer: Defense Technology

Manufacturer Description: An inert training less lethal 40MM round used to penetrate barriers, such as windows, hollow core doors, wallboard, and thin plywood. Upon impacting the barrier, the nose cone ruptures and instantaneously delivers an inert payload inside of a structure or vehicle. The 40mm inert Ferret round is primarily used to train personnel in the proper use of its deployment.

Defense Technology Ferret 40MM Liquid Barricade Training Round Inert #1263

Cost	$23 each
Quantity	15
Lifespan	5 Years
Funding Source	General Funds

Manufacturer: Defense Technology

Manufacturer Description: A less-lethal 40mm lightweight plastic and foam projectile fired from a single or multi-round purpose-built 40mm launcher with a rifled barrel at 325 FPS. The 30-gram foam projectile delivers 120 ft/lbs. of energy on impact. The 40mm Exact Impact Sponge Round provides accurate and effective performance when fired from the approved distance of not less than five (5) feet and as far as 131 feet from the target.

Combined Systems Inc. 40MM Sponge, Smokeless Spin Stabilized Round #4577

Cost	$30 each
Quantity	1174
Lifespan	5 Years
Funding Source	General Funds

Manufacturer: Combined Systems Inc.

Manufacturer Description: A spin-stabilized projectile delivering blunt trauma effect. Although it is extremely accurate and consistent, accuracy is dependent on the launcher. Effectiveness depends on many variables, such as distance, clothing, stature, and the point where the projectile impacts. Its purpose is to minimize the risks to all parties through pain compliance and/or incapacitation of potentially violent or dangerous subjects.

Less-Lethal Shotgun and Munitions (Categories 10 & 14)

The less-lethal shotgun is a standard Remington Model 870, 12-gauge shotgun that has been converted to fire bean bag rounds as an alternative to lethal force when appropriate. The less-lethal shotgun has a distinctive, orange-colored stock and foregrip to distinguish it from lethal weapons.

Capability: The less-lethal shotgun can fire a 12-gauge Super-Sock Bean Bag Round with a maximum effective range of seventy-five (75) feet. The range of the weapon system helps to maintain space between officers and a suspect reducing the immediacy of the threat, which is a principle of de-escalation.

Usage: The less-lethal shotguns can be deployed to de-escalate conflict and reduce the need for lethal force. The system's effectiveness allows time and distance between officers and a suspect, reducing the immediacy of the threat and allows opportunity for further de-escalation. This system can be used to address self-destructive/suicidal, dangerous, and/or combative individuals, to gain a tactical advantage from a distance (i.e., breaking a window to get an unobstructed view of an individual or disabling a security camera), against potentially vicious animals, riot/crowd control and/or civil unrest incidents where the use of the 40mm is objectively reasonable.

Training Requirements: All officers must successfully complete a minimum of two hours of department training before they can deploy the less lethal shotgun. Training includes a review of the Departments Use of Force Policy, nomenclature, familiarization of the system, and a qualification course.

The Department possesses the following Less Lethal Shotguns and Munitions:

Remington 870 Less Lethal 12 Gauge Shotgun

Cost	$946 each
Quantity	35
Lifespan	25 Years
Funding Source	General Funds

Manufacturer: Remington

Manufacturer Description: The Remington 870 Less Lethal Shotgun is used to deploy the less lethal 12-gauge Super-Sock Beanbag Round up to a distance of 75 feet. The range of the weapon system helps to maintain space between officers and a suspect reducing the immediacy of the threat which is a principle of De-escalation.

Combined Systems Inc. Super-Sock Bean Bag Round #2581

Cost	$32/ Box
Quantity	112 of 150 Boxes
Lifespan	No Expiration
Funding Source	General Funds

Manufacturer: Combined Systems Inc.

Manufacturer Description: A less lethal 2.4-inch 12-gauge shotgun round firing a ballistic fiber bag filled with 40 grams of lead shot at a velocity of 270-290 feet per second (FPS). CTS Super-Sock rounds are discharged from a dedicated 12-gauge shotgun that is distinguishable by an orange butt stock and fore grip. This round provides accurate and effective performance when fired from the approved distance of not fewer than five (5) feet. The maximum effective range of this munition is up to 75 feet from the target.

Less-Lethal Pepperball Launcher and Munitions (Categories 12 & 14)

The Pepperball VKS Launcher is a semi-automatic less-lethal launcher designed to provide officers with an alternative to lethal force when appropriate. The less-lethal Pepperball launcher has a distinctive, yellow-colored stock and magazine to distinguish it from lethal weapons.

Capability: The Pepperball VKS Launcher fires .68-caliber projectiles with irritant powder, with a maximum effective range of 150 feet. It offers both single-shot and semi-automatic firing modes, giving the flexibility to choose between precision and rapid deployment. The range of the weapon system helps to maintain space between officers and a suspect, reducing the immediacy of the threat, which is a principle of de-escalation.

Usage: The Pepperball VKS Launcher can be deployed to de-escalate conflict and reduce the need for lethal force. The system's effectiveness allows time and distance between officers and a suspect, reducing the immediacy of the threat and allows opportunity for further de-escalation. This system can be used to address self-destructive/suicidal, dangerous, and/or combative individuals, to gain a tactical advantage from a distance (i.e., breaking a window to get an unobstructed view of an individual or disabling a security camera.), against potentially vicious animals, riot/crowd control and/or civil unrest incidents where the use of the Pepperball VKS Launcher is objectively reasonable.

Training Requirements: All officers must successfully complete a minimum of eight hours of department training before they can deploy the Pepperball VKS. Training includes a review of the Department's Use of Force Policy, nomenclature, familiarization of the system, and a qualification course.

The Department utilizes the following Pepperball Launcher and Munitions:

Pepperball VKS Pro Launcher

Cost	$1375 each
Quantity	4
Lifespan	No Listed Expiration
Funding Source	Grant Funding

Manufacturer: Pepperball

Manufacturer Description: The Pepperball VKS is a long-range, semi-automatic non-lethal launcher designed for law enforcement use. It is capable of firing projectiles and VXR (Variable Kinetic Rounds, which include impact, marking, and illuminating rounds. The VKS offers variable kinetic impact, meaning it can adjust the force of impact based on the situation, proving a versatile tool for non-lethal applications.

Pepperball EL-2 Electronic Hopper

Cost	$650 each
Quantity	4
Lifespan	No Listed Expiration
Funding Source	Grant Funding

Manufacturer: Pepperball

Manufacturer Description: The Pepperball EL-2 Hopper is a 160-round electric feed hopper for use with the Pepperball VKS platforms. This ultra durable and lightweight hopper feeds 20+ PPS (Projectiles Per Second), making it ideal for dynamic law enforcement scenarios. The hopper's electronic feed system prevents malfunctions and supports rapid fire capability, ensuring uninterrupted performance when used.

Pepperball Glass Breaking Round

Cost	$270/Case
Quantity	100
Lifespan	No Listed Expiration
Funding Source	Grant Funding

Manufacturer: Pepperball

Manufacturer Description: The Pepperball Glass Breaking Round is a specialized projectile designed to shatter tempered glass, such as vehicle windows or barriers, providing officers with enhanced tactical capabilities. Constructed with a durable ceramic tip, this round enables precise and effective breaching while maintaining a safe distance. Ideal for gaining unobstructed views, accessing confined spaces, or disrupting hostile environments.

Pepperball VXR Inert Round

Cost	$236/Case
Quantity	100
Lifespan	No Listed Expiration
Funding Source	Grant Funding

Manufacturer: Pepperball

Manufacturer Description: The Pepperball VXR Inert Round is a .68 caliber, extended range projectile designed for training and scenario-based exercises. Filled with a harmless, non-irritant powder, it allows officers to practice accurate deployment and tactical techniques in safe, controlled environment. With a maximum range of up to 150 feet, the VXR Inert Round mimics the performance of live Pepperball rounds, ensuring realistic training without the use of irritants.

Pepperball Round Inert Training Round

Cost	$657/Case
Quantity	750
Lifespan	No Listed Expiration
Funding Source	Grant Funding

Manufacturer: Pepperball

Manufacturer Description: The Pepperball Inert Training Round is a .68-caliber projectile filled with a non-irritant, inert powder, designed specifically for training purposes. It allows officers to practice marksmanship, handling, and tactical scenarios safely and effectively. The round closely replicates the weight and trajectory of live Pepperball projectiles, ensuring realistic training sessions while eliminating exposure to irritants. Ideal for both indoor and outdoor training environments.

Pepperball VXR Live-x OC Powder

Cost	$213/Case
Quantity	50
Lifespan	No Listed Expiration
Funding Source	Grant Funding

Manufacturer: Pepperball

Manufacturer Description: The Pepperball VXR Live-X Round is a .68-caliber, extended-range projectile containing a highly concentrated OC (Oleoresin Capsicum) powder, delivering maximum irritant impact. With a range of up to 150 feet, the VXR Live-X Round is ideal for long-distance engagement, effectively incapacitating aggressive individuals by causing intense discomfort to the eyes, respiratory system, and skin. It is a powerful tool for controlling dangerous situations while maintaining officer safety and creating opportunities for de-escalation.

Pepperball Round Live X OC Powder

Cost	$255/Case
Quantity	90
Lifespan	No Listed Expiration
Funding Source	Grant Funding

Manufacturer: Pepperball

Manufacturer Description: The Pepperball Live-X Round is a .68-caliber projectile containing a potent OC (Oleoresin Capsicum) powder, designed for close-to-mid-range engagement. Upon impact, it disperses a powerful irritant that causes intense eye, skin, and respiratory discomfort, effectively incapacitating aggressive individuals. This round is an essential tool for safely managing high-risk situations, providing officers with a non-lethal option for controlling threats and de-escalating conflicts.

Pepperball VXR Blue Ink

Cost	$165/Case
Quantity	50
Lifespan	No Listed Expiration
Funding Source	Grant Funding

Manufacturer: Pepperball

Manufacturer Description: The VXR Blue Ink Pepperball is a non-lethal projectile designed for use in less-lethal force situations. It combines a pepper irritant with a visible blue dye to mark targets, aiding in identification and providing an effective deterrent. Upon impact, the Pepperball releases an irritant that causes temporary discomfort, such as burning or irritation to the skin and eyes, while the blue dye marks the individual for easier tracking and identification. This tool is often used in law enforcement to subdue suspects without causing permanent harm.

Diversionary Devices (Category 12)

A handheld device that can be deployed to emit a flash, sound, and/or smoke.

Capability: To produce atmospheric overpressure and brilliant white light that can cause short-term (6 to 8 seconds) physiological/psychological, sensory deprivation to give officers a tactical advantage. A diversionary device is ideal for distracting dangerous suspects during apprehensions, hostage rescues, room entry, or other high-risk arrest situations.

Usage: Diversionary devices shall only be used by officers who have been trained in the proper use. These devices can be deployed in hostage and barricaded subject situations; in high-risk (search/arrest) warrant services where there may be hazards to officers; during other high-risk situations where the use would be advantageous in preserving life and/or increase officer safety; and during training exercises.

Training Requirements: Prior to using this equipment, officers must attend diversionary device training. Training is provided by POST certified instructors in the safe handling, deployment, and documentation of the use of this equipment.

Note: Some orders of Diversionary Devices can only be ordered in minimum quantities. As a result, some inventories may occasionally exceed needed amounts.

The Department currently possesses the following Diversionary Devices:

Combined Tactical Systems Inc. #7290-2 Noise Flash Device

Cost	$52 each
Quantity	10 of 24
Lifespan	No Expiration
Funding Source	General Funds

Manufacturer: Combined Systems Inc.

Manufacturer Description: A non-bursting, non-fragmenting multi-bang device that produces a thunderous bang with an intensely bright light. Ideal for distracting dangerous suspects during assaults, hostage rescue, room entry, or other high-risk arrest situations.

Combined Tactical Systems Inc. #7290-9 Noise Flash Device Multi Burst

Cost	$60 each
Quantity	6 of 6
Lifespan	No Expiration
Funding Source	General Funds

Manufacturer: Combined Systems Inc.

Manufacturer Description: A multi-bang, non-bursting, non-fragmenting multi-bang device that produces a thunderous bang with an intensely bright light. Ideal for distracting dangerous suspects during assaults, hostage rescue, room entry, or other high-risk arrest situations.

Defense Technology #8902 Noise Flash Device Low Role

Cost	$55 each
Quantity	0 of 24
Lifespan	No Expiration
Funding Source	General Funds

Manufacturer: Defense Technology

Manufacturer Description: A non-bursting, limited movement and rolling, non-fragmenting device that produces a thunderous bang with an intensely bright light. Ideal for distracting dangerous suspects during assaults, hostage rescue, room entry, or other high-risk arrest situations.

Rifles, Munitions, and Accessories (Category 10 & 11)

The rifle is a long-barreled firearm designed for greater accuracy over a long distance.

Capability: The rifle provides officers the ability to engage hostile suspects from distances far greater than their handguns. The standard issued rifles can have an effective range of 600 yards and offer increased accuracy over a handgun. However, rifles are not appropriate for every situation.

Usage: Officers may deploy the rifle in any circumstance where the officer can articulate a reasonable expectation that the rifle may be needed. Examples of some general guidelines for deploying the rifle may include, but are not limited to, the following:

a) Situations where the officer reasonably anticipates an armed encounter.
b) When an officer is faced with a situation that may require the delivery of accurate and effective shot placement at long range.
c) Situations where an officer reasonably expects the need to meet or exceed a suspect's weaponry.
d) When an officer reasonably believes there may be a need to deliver accurate shot placement on a barricaded suspect or a suspect with a hostage.
e) When an officer reasonably believes a suspect may be wearing body armor.
f) When needed to euthanize an animal.

Training Requirements: Prior to deploying a rifle, officers must successfully complete a 16-hour POST approved training course. The course is taught by POST certified instructors. Officers are required to pass a qualification course annually.

The Department currently possesses the following rifles:

Colt Tactical Carbine Model AR-15A3

Cost	$800 each
Quantity	100
Lifespan	No Expiration
Funding Source	General Funds

Manufacturer: Colt

Manufacturer Description: A rifle that fires an intermediate-power cartridge (.223) which is more powerful than a standard pistol but less powerful than a standard rifle. Rifle and has a 16" barrel. The magazine holds 30 rounds of ammunition, and the rifle has a collapsible stock. The carbine provides officers the ability to engage hostile suspects at distances generally greater than the effective distance of their handguns. Additionally, AR-15 rifles offer advantages over handguns, such as increased accuracy potential and the ability to defeat soft body armor but are not appropriate for every situation.

Colt Tactical Carbine Model M16

Cost	$800 each
Quantity	4
Lifespan	No Expiration
Funding Source	General Funds

Manufacturer: Colt

Manufacturer Description: A rifle that fires an intermediate-power cartridge (.223) which is more powerful than a standard pistol but less powerful than a standard rifle. Rifle and has a 16" barrel. The magazine holds 30 rounds of ammunition, and the rifle has a collapsible stock. The carbine provides officers the ability to engage hostile suspects at distances generally greater than the effective distance of their handguns. Additionally, AR-15 rifles offer advantages over handguns, such as increased accuracy potential and the ability to defeat soft body armor but are not appropriate for every situation.

Sionics Weapons Systems Model Short Barrel Rifle (SBR) LE

Cost	$1500 each
Quantity	15
Lifespan	No Expiration
Funding Source	General & Grant Funding

Manufacturer: Sionics Weapons Systems

Manufacturer Description: A rifle that fires an intermediate-power cartridge (.223) which is more powerful than a standard pistol but less powerful than a standard rifle. Rifle and has a 16" barrel. The magazine holds 30 rounds of ammunition, and the rifle has a collapsible stock. The carbine provides officers the ability to engage hostile suspects at distances generally greater than the effective distance of their handguns. Additionally, AR-15 rifles offer advantages over handguns, such as increased accuracy potential and the ability to defeat soft body armor but are not appropriate for every situation.

Heckler and Koch Model MP5A3

Cost	$1000 each
Quantity	7
Lifespan	No Expiration
Funding Source	General Funds

Manufacturer: Heckler and Koch

Manufacturer Description: A submachine gun chambered in 9mm it is universally applicable making it useable in all areas and under all conditions. The magazine holds 30 rounds of ammunition and allows officers the ability to engage hostile suspects at distances generally greater than the effective distance of their handguns. Used by the Special Weapons and Tactics Team.

Remington Model 700 P Bolt Action Rifle

Cost	$0 each
Quantity	3
Lifespan	No Expiration
Funding Source	Donation

Manufacturer: Remington

Manufacturer Description: A semi-automatic shoulder-fired rifle with precision optics that fires a .308 Winchester cartridge. The .308 rifle provides SWAT Snipers the ability to engage hostile suspects at great distances with accuracy. The .308 rifles are used exclusively by officers assigned to the SWAT Sniper Team. These rifles are typically deployed with the SWAT Sniper Team during high-risk SWAT operations and special events or instances wherein Sniper Over Watch Teams are needed.

Remington Model 700 SPS Bolt Action Rifle

Cost	$0
Quantity	1
Lifespan	No Expiration
Funding Source	Personal Rifle

Manufacturer: Remington

Manufacturer Description: A semi-automatic shoulder-fired rifle with precision optics that fires a .308 Winchester cartridge. The .308 rifle provides SWAT Snipers the ability to engage hostile suspects at great distances with accuracy. The .308 rifles are used exclusively by officers assigned to the SWAT Sniper Team. These rifles are typically deployed with the SWAT Sniper Team during high-risk SWAT operations and special events or instances wherein Sniper Over Watch Teams are needed.

Remington Model 700 PSS Bolt Action Rifle

Cost	$0
Quantity	1
Lifespan	No Expiration
Funding Source	Personal Rifle

Manufacturer: Remington

Manufacturer Description: A semi-automatic shoulder-fired rifle with precision optics that fires a .308 Winchester cartridge. The .308 rifle provides SWAT Snipers the ability to engage hostile suspects at great distances with accuracy. The .308 rifles are used exclusively by officers assigned to the SWAT Sniper Team. These rifles are typically deployed with the SWAT Sniper Team during high-risk SWAT operations and special events or instances wherein Sniper Over Watch Teams are needed.

Ruger Precision Rifle Model 18028 Bolt Action Rifle

Cost	$0
Quantity	1
Lifespan	No Expiration
Funding Source	Personal Rifle

Manufacturer: Ruger

Manufacturer Description: A semi-automatic shoulder-fired rifle with precision optics that fires a .308 Winchester cartridge. The .308 rifle provides SWAT Snipers the ability to engage hostile suspects at great distances with accuracy. The .308 rifles are used exclusively by officers assigned to the SWAT Sniper Team. These rifles are typically deployed with the SWAT Sniper Team during high-risk SWAT operations and special events or instances wherein Sniper Over Watch Teams are needed.

Masterpiece Arms, Model PMR Pro .308 Rifle

Cost	$0
Quantity	1
Lifespan	No Expiration
Funding Source	Personal Rifle

Manufacturer: Masterpiece Arms

Manufacturer Description: A semi-automatic shoulder-fired rifle with precision optics that fires a .308 cartridge. The rifle provides SWAT Snipers the ability to engage hostile suspects at great distances with accuracy. The .308 rifles are used exclusively by officers assigned to the SWAT Sniper Team. These rifles are typically deployed with the SWAT Sniper Team during high-risk SWAT operations and special events or instances wherein Sniper Over Watch Teams are needed.

Colt M16A1 Rifle

Cost	$0 each
Quantity	15
Lifespan	No Expiration
Funding Source	1033/ LESO Program

Manufacturer: Colt

Manufacturer Description: Received from the military and converted to semi-automatic AR-15. (4) are currently in use in the Traffic Safety Unit. The traffic safety unit utilizes converted rifles to enhance the tactical capabilities when on their motorcycles to augment their service pistols when needed. (7) are in use by the Honor Guard for ceremonial display. Honor Guard members are sworn peace officers who have been specially chosen from all divisions of the department. Duties include providing funeral honors for officers who have been killed in the line of duty or other ceremonial duties as assigned. (4) are currently not in use.

Ti-Fighter 5.56mm Thread On Suppressor

Cost	$1,195 Each
Quantity	15
Lifespan	No Expiration
Funding Source	Grant Funding

Manufacturer: Ti-Fighter

Manufacturer Description: TI-Fighter 5.56 Thread On Suppressors are an attachment to the entry rifles used by the Department's SWAT team. The benefits of suppressors include noise reduction, reduced muzzle flash, reduced recoil, increased accuracy, and minimization of concussion impact. The suppressors are also capable of bringing rifle fire into approved OSHA standards.

The Department currently possesses the following rifle munitions:

Federal Gold Medal .223 55 Grain (GR) Rifle Round (Training)

Cost	$236/ Case
Quantity	19 of 150 Cases
Lifespan	No Expiration
Funding Source	General Fund

Manufacturer: Federal

Manufacturer Description: Federal 223 Remington ammo features a lead core 55 Grain Full Metal Jacket bullet that is nonmagnetic, non-corrosive boxer primer and new virgin brass casing that can be reloaded up to seven times for those high volume 223 ammo shooters that love to reload their 223 Remington ammunition. The Federal American Eagle 223BL ammo offers muzzle velocity of 3240 feet per second and muzzle energy of 1282 ft lbs.

Hornady 9MM Critical Duty 135 GR

Cost	$290/ Case
Quantity	12 of 25 Cases
Lifespan	No Expiration
Funding Source	General Fund

Manufacturer: Hornady

Manufacturer Description: This law enforcement cartridge offers match accuracy with a high ballistic coefficient providing superior long-range performance. The patented design eliminates clogging and aids in bullet expansion. A large mechanical jacket to core band works to keep the bullet and core from separating for maximum weight retention, excellent expansion, consistent penetration, and terminal performance through all FBI tactical handgun ammunition tests. The bright nickel-plated case simplifies chamber checks in reduced light and is loaded with low flash propellant to help preserve night vision in low light firing.

Hornady .223 55GR Tap Urban Rifle Round (Duty)

Cost	$160/ Case
Quantity	70 of 300 Cases
Lifespan	No Expiration
Funding Source	General Fund

Manufacturer: Hornady

Manufacturer Description: Federal 223 Remington ammo features a lead core 55 Grain Full Metal Jacket bullet that is nonmagnetic, non-corrosive boxer primer and new virgin brass casing that can be reloaded up to seven times for those high volume 223 ammo shooters that love to reload their 223 Remington ammunition. The Federal American Eagle 223BL ammo offers a muzzle velocity of 3240 feet per second and muzzle energy of 1282 ft-lbs.

Hornady .308 Winchester A-Max Tap Rifle Round

Cost	$250/ Case
Quantity	21 of 60 Cases
Lifespan	No Expiration
Funding Source	General Fund

Manufacturer: Hornady

Manufacturer Description: This law enforcement cartridge offers match accuracy with a high ballistic coefficient providing superior long-range performance. This load demonstrates expansion and fragmentation similar to the 110-gr. load, but with a noticeable increase in penetration and retained bullet weight. This bullet penetrates glass with minimal deflection and exhibits excellent expansion and fragmentation characteristics.

Winchester 9MM 124 GR Full Metal Jacket

Cost	$282/ Case
Quantity	20 of 20 Case
Lifespan	No Expiration
Funding Source	General Fund

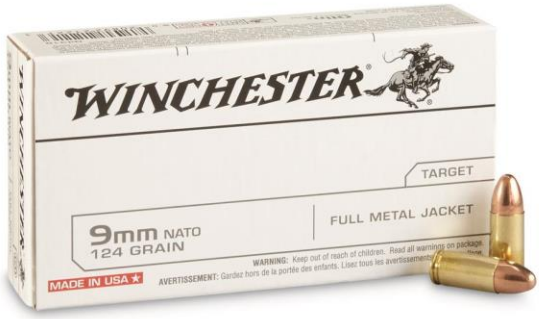

Manufacturer: Winchester

Manufacturer Description: This law enforcement cartridge is loaded with a 124-grain Full Metal Jacket bullet. The Full Metal Jacket bullet is ideal for range practice and is known for its reliability, consistent performance, and accuracy. The jacket extends from the nose to the base, preventing bullet expansion and barrel leading. This ammunition is new production, non-corrosive, ammo, featuring brass cases, boxer primed, and is reloadable.

Chemical Agents and Smoke Canisters (Category 12)

Canisters containing non-lethal chemical agents and/or smoke that are released when deployed.

Capability: Chemical agent and smoke canisters have a variety of individual capabilities and applications. Chemical agent and smoke canisters carry the agent into the environment in a variety of methods, including but not limited to powder, a liquid mist, smoke, pyrotechnic devices, and vapor aerosols. Exposure to chemical agents normally causes no lasting effects. This equipment has indoor and outdoor capabilities and uses.

Usage: The use of chemical agents causes mucous membranes and exposed skin to become inflamed resulting in a burning sensation. It provides a temporary respiratory effect and induces discomfort on the skin. Smoke canisters are used to create a diversion or conceal the movement of a tactical team. Chemical agents and smoke canisters may be utilized during confrontations with violent or potentially violent suspects, as a less lethal option to assist with dispersing violent crowds, and/or for the arrest of suspects.

Training Requirements: Sworn members utilizing chemical agent canisters are certified by POST less lethal and chemical agent instructors. Sworn members are trained in the proper use of chemical agent cannisters and smoke canisters, nomenclature, and documentation for the use of this equipment.

The Department currently possesses the following chemical agent and smoke canisters:

Defense Technology Flameless Tri-Chamber Safe-Smoke Canister #1032

Cost	$40 each
Quantity	5
Lifespan	5 Years
Funding Source	General Fund

Manufacturer: Defense Technology

Manufacturer Description: The design of the Tri-Chamber Flameless Saf-Smoke allows for the contents to burn within an internal can and disperse the agent safely with reduced risk of fire. Primarily designed for indoor tactical situations and will deliver about 20-25 seconds of burn time. Was designed for barricaded situations in mind to primarily detect and or dislodge a barricaded subject. The purpose of the Tri-Chamber Flameless Saf-Smoke is to minimize the risk to all parties through pain compliance and or incapacitation of potentially violent or dangerous subjects.

Defense Technology Flameless Tri-Chamber Safe-Smoke Canister #1033

Cost	$40 each
Quantity	4 of 10
Lifespan	5 Years
Funding Source	General Fund

Manufacturer: Defense Technology

Manufacturer Description: The design of the Tri-Chamber Flameless Saf-Smoke allows for the contents to burn within an internal can and disperse the agent safely with reduced risk of fire. Primarily designed for indoor tactical situations and will deliver about 20-25 seconds of burn time. Was designed for barricaded situations in mind to primarily detect and or dislodge a barricaded subject. The purpose of the Tri-Chamber Flameless Saf-Smoke is to minimize the risk to all parties through pain compliance and or incapacitation of potentially violent or dangerous subjects.

Defense Technology Military Style Saf-Smoke Canister #1063

Cost	$22 each
Quantity	30
Lifespan	5 Years
Funding Source	General Fund

Manufacturer: Defense Technology

Manufacturer Description: The Saf-Smoke canister was designed for training but may also be used in operations. The Saf-Smoke offers the same burn times as other smoke canisters making it an appropriate choice for training or simulation deployment of chemical agent canisters.

Defense Technology Maximum HC Smoke Large Style Canister #1073

Cost	$30 each
Quantity	14
Lifespan	5 Years
Funding Source	General Fund

Manufacturer: Defense Technology

Manufacturer Description: The Maximum HC Smoke is designed specifically for outdoor use in criminal riotous situations with a high-volume continuous burn that expels its payload in approximately 1.5-2 minutes through four gas ports located on the top of the canister. The smoke can be used to conceal tactical movement or route a crowd. The volume of smoke and agent is vast and obtrusive.

Defense Technology Maximum HC Smoke Military Style Canister #1083

Cost	$30 each
Quantity	8 of 10
Lifespan	5 Years
Funding Source	General Fund

Manufacturer: Defense Technology

Manufacturer Description: The Maximum HC Smoke is designed specifically for outdoor use in criminal riotous situations with a high-volume continuous burn that expels its payload in approximately 20-40 seconds through four gas ports located on the top of the canister. The smoke can be used to conceal tactical movement. The volume of smoke and agent is vast and obtrusive.

Defense Technology Han-Ball Grenade CN #1091

Cost	$40 each
Quantity	3
Lifespan	5 Years
Funding Source	General Fund

Manufacturer: Defense Technology

Manufacturer Description: The Han-Ball Grenade is a launchable grenade and is a maximum effect device that delivers three stimuli for psychological and physiological effects: light, sound and CS. This grenade is a launchable and combines loud report and flash with effects of chemical agents making it suitable for riot control situations.

Defense Technology Han-Ball Grenade CS #1092

Cost	$40 each
Quantity	103
Lifespan	5 Years
Funding Source	General Fund

Manufacturer: Defense Technology

Manufacturer Description: The Han-Ball Grenade is a launchable grenade and is a maximum effect device that delivers three stimuli for psychological and physiological effects: light, sound and CS. This grenade is a launchable and combines loud report and flash with effects of chemical agents making it suitable for riot control situations.

Defense Technology Flameless Expulsion Grenade Inert #2043

Cost	$40 each
Quantity	3 of 3
Lifespan	5 Years
Funding Source	General Fund

Manufacturer: Defense Technology

Manufacturer Description: The Inert Flameless Expulsion Grenade is a training device that will allow team members to deploy the grenade without effecting roll players. This compact, non-pyrotechnic, inert powder device provides safe expulsion without risk of fire. Unlike pyrotechnical grenades, this device's contents are expelled upon actuation of a CO2 cartridge that will affect a confined area of approximately 1500 square feet.

Breaching Tools (Categories 7, 10, & 14)

Tools that are used to gain entry into structures by defeating locks and/or fortifications. These tools include breaching shotguns and explosive breaching equipment.

Capability: A breaching shotgun can defeat lightly fortified or locked doors. Explosive breaching tools can defeat heavily fortified doors and structures. The listed breaching tools are utilized by SWAT operators and are capable of breaching glass, metal doors, wood doors, deadbolts, locks, and hinges.

Usage: Breaching (or forced entry) is used to rapidly access a locked or fortified room or structure to preserve life, affect and arrest, or to conduct a search when lawfully able to do so. Forced entry is strictly regulated and may only be done when legal parameters are met.

Training Requirements: Sworn members are trained in the proper use of the breaching shotgun. Explosive breacher(s) shall be licensed as a Blaster by Cal/OSHA. Explosive Breachers will attend an approved "Tactical Energetic Breaching" course.

The Department currently possesses the following explosive breaching tools:

Remington 870 Short Barrel Breaching Shotgun

Cost	$810 each
Quantity	2
Lifespan	25 Years
Funding Source	General Fund

Manufacturer: Remington

Manufacturer Description: This weapon allows breachers to safely utilize shotgun breaching rounds in order to destroy deadbolts, locks, and hinges. The stand-off that is attached to the end of the barrel allows for positive placement of the gun into the correct position and vents gases to prevent overpressure.

Combined Tactical Systems 12 Gauge Breaching Munition #2570

Cost	$7/ Box
Quantity	24 of 24 Boxes
Lifespan	No Expiration
Funding Source	General Fund

Manufacturer: Remington

Manufacturer Description: 12-gauge frangible slug to disrupt locking mechanisms and hinges, defeat and breach external and internal doors.

Defense Technology TKO 12 Gauge Breaching Round #3105

Cost	$7/ Box
Quantity	3 of 3 Boxes
Lifespan	No Expiration
Funding Source	General Fund

Manufacturer: Defense Technology

Manufacturer Description: The 12-Gauge **TKO** Breaching Round is a 12-Gauge shell loaded with a compressed zinc slug, utilizing smokeless powder as a propellant. The TKOP is capable of defeating door lock mechanisms, doorknobs, hinges, deadbolts safety chains and pad locks on both wooden or hollow core doors. Upon impact the zinc slug disintegrates into a fine powder eliminating fragmentation.

KBT (Kinetic Breaching Tool)

Cost	$10,750
Quantity	1
Lifespan	10 Years
Funding Source	Grant Funding

Manufacturer: KBT

Manufacturer Description: This kinetic energy tool was built to fill the gap between manual forced entry and explosive breaching. The KBT employs the best physics in the form of a self-contained impact ram with powder-actuated cartridges that go directly into a door or entryway. The device captures the force of the ram within the tool so there is no projectile or explosive energy that leaves the device. The KBT is designed to increase operator safety by allowing operators to breach from behind a shield or to the side of the door.

KBT (Kinetic Breaching Tool) .45 Caliber Blank Rounds

Cost	$2.97 Each
Quantity	287
Lifespan	No Expiration
Funding Source	Grant Funding

Manufacturer: KBT

Manufacturer Description: This kinetic energy tool operates by using a proprietary .45 caliber handgun blank and an eight (8) round cylinder for multiple breaches. Unlike explosive or shotgun breaching, all the force generated from the KBT is mechanically driven through a ram. This means that no projectile or explosive energy leaves the device except for the force of the ram which is permanently captured in the device.

Dyno Noble Inc. Primacord (UN0065)

Cost	$2/ Foot
Quantity	2647 Feet
Lifespan	10 Years
Funding Source	General Fund

Manufacturer: Dyno Nobel Inc.

Manufacturer Description: PRIMACORD is a detonating cord that is a thin, flexible plastic tube usually filled with pentaerythritol tetranitrate (PETN, pentrite). With the PETN exploding at a rate of approximately 6400m/s, any common length of detonation cord appears to explode instantaneously. It is a highspeed fuse which explodes, rather than burns, and is suitable for detonating high explosives. Explosive entry is a non-lethal force option, but it should only be used when you can justify that spending any length of time in front of a door with a mechanical breach would be too dangerous for the officer conducting the breach or that mechanical breaching would fail on a reinforced objective.

Nonel Lead Line (UN0349)

Cost	$1/ Foot
Quantity	4610 Feet
Lifespan	10 Years
Funding Source	General Fund

Manufacturer: Dyno Nobel Inc.

Manufacturer Description: NONEL LEAD LINE provides maximum flexibility to the blaster in choosing a position of safety from which to initiate nonelectric blast rounds in either underground or surface applications. LEAD LINE propagates a low energy signal, similar to a dust explosion, at approximately 6500 ft/sec (2000 m/sec) along the tubes length with minimal disturbance to the outside of the tube.

Nonel Detonator Assembly Non-Elelctric (UN0361)

Cost	$15/ each
Quantity	83
Lifespan	10 Years
Funding Source	General Fund

Manufacturer: Dyno Nobel Inc.

Manufacturer Description: A detonator assembly is a small sensitive primary explosive device generally used to detonate a larger, more powerful and less sensitive secondary explosive such as a plastic explosive. Detonator assemblies come in a variety of types, including non-electric caps, electric caps, and fuse caps.

Training Summary

The safe use of certain controlled equipment requires ongoing training to maintain proficiency and required certifications. While the department conducts most ongoing training internally through the Professional Standards Unit, external training courses and services are also necessary. Training courses can vary each year depending on operational needs and State or Federal mandates. Consumable and non-consumable equipment are often used during training to ensure competency during actual operational use. Funding sources for training include the Police Department's operating budget and/or grants.

Training Costs

The personnel cost of training is absorbed into the Department's operating budget. The estimated cost for staff to attend externally hosted training for 2024 was approximately $9628.34.

The below table reflects the expended controlled equipment used during training in calendar year 2024.

Item	Used	Cost
Nonel Detonator Assembly Non-Elelctric (UN0361)	27	$405
Dyno Noble Inc. Primacord (UN0065)	297.5 feet	$595
Combined Systems Inc. 40MM Sponge, Smokeless Spin Stabilized Round #4577	26	$780
Combined Systems Inc. Super Sock Bean Bag Round #2581	24 Boxes	$768
Federal Gold Medal .223 55 Grain (GR) Rifle Round	37 Cases	$8732
Hornady 9MM Critical Duty 135 GR	2 Cases	$580
Hornady .223 55gr Rifle Round, Tap Urban	45 Cases	$7200
Hornady .308 Winchester 155gr Rifle Round, A-Max Tap	7 Cases	$1750
Nonel Lead Line (UN0349)	390 Feet	$390
TOTAL:		$21,200

EQUIPMENT COSTS

The following table summarizes equipment related expenditures for calendar year 2024 and the projected expenses in calendar year 2025. Equipment expenditures include the acquisition of new equipment, the replacement of damaged equipment, and the ongoing maintenance of the controlled equipment.

Equipment Type	Annual Expenditure (2024)	Projections (2025)
Unmanned Aircraft System	$0	$30,000
Robots	$0	$0
Armored Vehicles	$935	$1000
Mobile Incident Command	$0	$1000
40 mm Less-Lethal Launchers	$300	$300
Less-Lethal Shotguns	$0	$0
Diversionary Devices	$0	$1000
Rifles	$0	$10,712
Chemical Agents and Smoke Canisters	$0	$8,178.71
Breaching Tools	$0	$0
TOTAL	**$1235**	**$52,190.71**

The Milpitas Police Department is projected to acquire one (1) DJI Matrice and four (4) DJI Avata drones using grant funding, which was approved by City Council during the 2024 calendar year. These purchases were outlined in the 2024 Controlled Equipment Report under Projected Acquisitions.

In addition, the Milpitas Police Department is projected to acquire consumable controlled equipment (i.e. Chemical Agents and Smoke Canisters) with the current replenishment schedules and policies.

Fiscal Impact

The Milpitas Police Department is budgeted for 128 full-time employees which includes 94 full-time sworn officer positions and 34 non-sworn full-time professional staff positions. During Fiscal Year 2023/2024 the Police Department had an operating budget of $41,516,360.

Although the City of Milpitas adopts its operating budget on a fiscal year basis (beginning July 1st) the cost of controlled equipment expenditures is reflected in this report for calendar year 2024 as required by Assembly Bill 481.

During 2024, the Milpitas Police Department spent approximately $32,063.34 for controlled equipment and associated training. Some expenditures for controlled equipment were funded through State and/or Federal grants reducing the impact of acquiring, utilizing, maintaining, and training with controlled equipment to the Department's operating budget. Although a portion of these expenditures were paid for with grant funding, the total expenditures represent only 0.077% of the Police Department's operating budget.

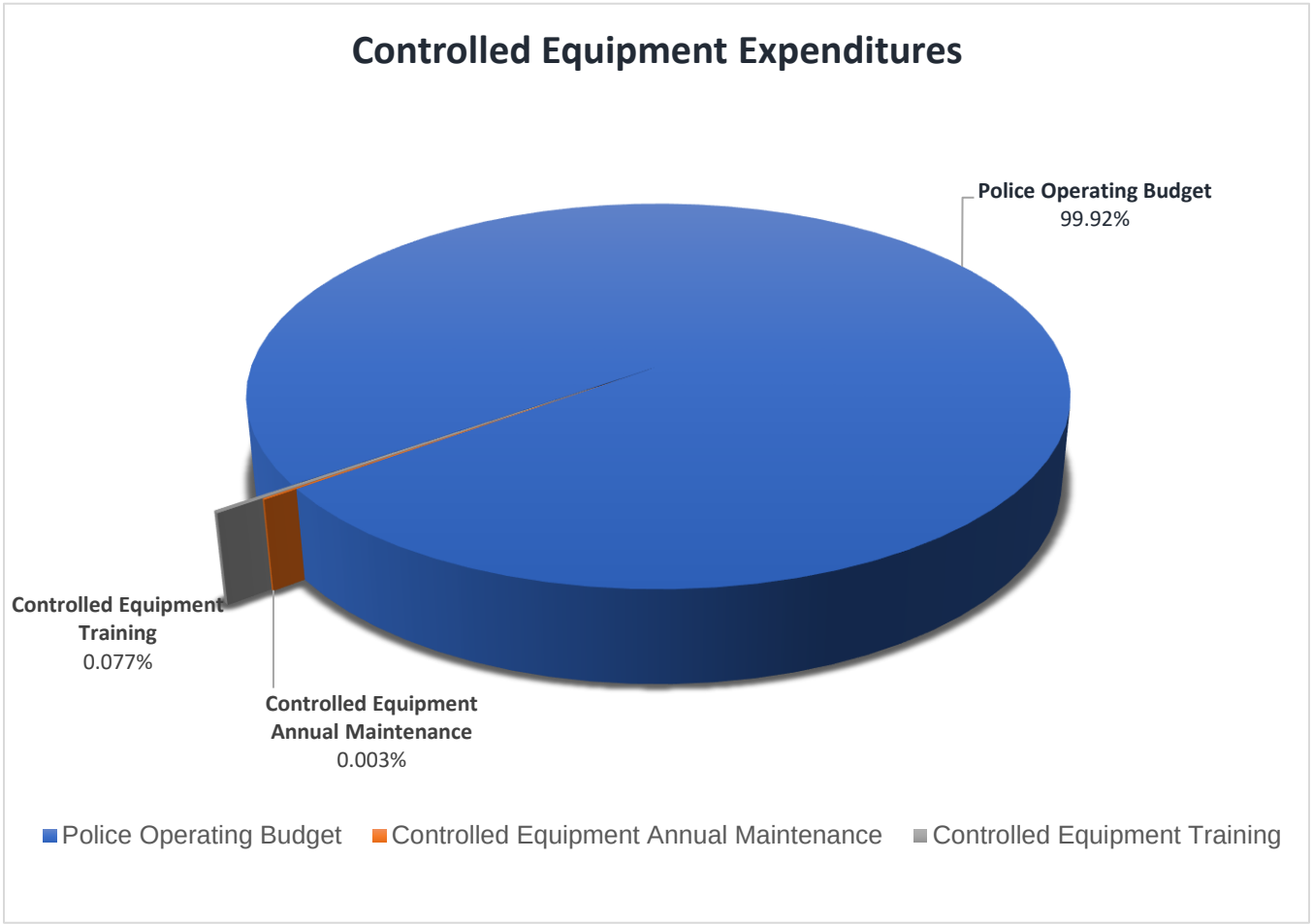

Projected Acquisitions for 2025

Although most acquisitions can be anticipated, the unanticipated replacement of existing controlled equipment may be necessary due to loss or damage. Replacement of these items will be handled on a case-by-case basis dependent on operational need, and in compliance with department policy for acquisition of controlled equipment.

Consumable Controlled Equipment

Consumable controlled equipment acquisitions for 2024 will remain consistent with current replenishment schedules and policies. Acquisitions will only restore quantities previously approved by the governing body. Some consumable controlled equipment acquisitions will be substituted with different brands, but their functionality and purpose remained unchanged.

Categories of consumable controlled equipment include:

- Ammunition – all calibers
- Chemical Agent and Smoke Canisters
- Specialty Munitions (40mm Munitions and Less Lethal Munitions)
- Diversionary Devices

Non-Consumable Controlled Equipment

Precision Rifle and Accessories
The Department is seeking the addition of a Masterpiece Arms, LE-BA .308 precision rifle. The rifle is a semi-automatic shoulder-fired rifle with precision optics that fires a .308 cartridge. The rifle provides SWAT Snipers the ability to engage hostile suspects at great distances with accuracy. The .308 rifles are used exclusively by officers assigned to the SWAT Sniper Team. These rifles are typically deployed with the SWAT Sniper Team during high-risk SWAT operations and special events or instances wherein Sniper Over Watch Teams are needed.

Funding for acquisition of the precision rifles will be from grant funding. Projected costs for the equipment are listed below:

Manufacturer Name and Model	Category	Quantity	Cost
Masterpiece Arms, LE-BA .308 precision rifle	9	2	$10,712
TOTAL:			**$10,712**

Lifespan:
Masterpiece Arms, LE-BA .308 precision rifle – No Listed Expiration

Fiscal Impact:
Annual maintenance is approximately $50.

Training:
Prior to using a rifle, officers must be certified by POST instructors in the operation of the rifle, be a member of the SWAT team, and be assigned as a sniper.

Department Transparency

In some instances, the application and use of controlled equipment may prompt questions or cause concern for community members.

The Milpitas Police Department strives to provide transparency on police activities, department policies, agency practices, and the use of controlled equipment. Remaining accountable to our community builds trust, confidence, and enhances community relationships. Prior to Assembly Bill 481, the Milpitas Police Department regularly presented equipment purchases and policies to the Public Safety and Emergency Preparedness Commission and utilizes various community engagement events to introduce our community to select controlled equipment including our Unmanned Aircraft Systems, Armored Rescue Vehicle, Mobile Incident Command Vehicle, and specialized SWAT equipment. We continue to use community events to create public awareness, transparency, and education.

Controlled Equipment Coordinator Report

Although the Department remains transparent with our community, we may occasionally receive complaints about our policies, practices, and/or the use of controlled equipment. The Milpitas Police Department is committed to completing thorough and fair investigations of complaints. Resolving complaints in a fair, impartial, and expeditious manner helps maintain community trust and ensures the Milpitas Police Department will continue to provide superior service to our community.

The Milpitas Police Department has a designated Controlled Equipment Coordinator that is responsible for conducting controlled equipment inspections and audits to ensure compliance with Assembly Bill 481. The Controlled Equipment Coordinator is also the designated point of contact for receiving citizen complaints as well as tracking policy violations related to the use of controlled equipment.

Inventory

The Controlled Equipment Coordinator conducted an inventory check and did not identify any discrepancies reported during the annual report on Controlled Equipment Use for calendar year 2024. The inventory itemization in this report reflects the current inventory of all Controlled Equipment at the Milpitas Police Department.

Complaints

The Milpitas Police Department did not receive any citizen complaints about the use or possession of controlled equipment for calendar year 2024.

Policy Violations

The Milpitas Police Department did not identify any policy violations related to the deployment or use of controlled equipment for calendar year 2024.

Conclusion

The equipment, resources, and training outlined in this report allows the Milpitas Police Department to protect our community by enhancing public and officer safety. The use of controlled equipment aids us in resolving critical incidents safely and effectively. Although controlled equipment is utilized infrequently, it is crucial that the equipment be readily available in rapidly evolving and dynamic situations where such equipment can be used to effectively respond to threats of public safety.

When deciding how controlled equipment is funded, acquired, or used, the Milpitas Police Department considers the public's welfare, safety, and civil liberties. This annual controlled equipment report reaffirms the department's commitment to providing transparency and information to our communities and elected officials in addition to ensuring compliance with the law.

The department places high regard to meaningful public input in using controlled equipment in our community. Inquires, complaints or concerns can be submitted to the Milpitas Police Department's Controlled Equipment Coordinator via email at,

controlledequipmentcoordinator@milpitas.gov

For more information, please visit the police department's website at,

https://www.milpitas.gov/milpitas/departments/police

Appendix

Definitions

1. Governing Body- The legislative body of the City of Milpitas.

2. Controlled Equipment- Includes items defined by California Government Code section 7070, subsections (c)(1) through (c)(16).

3. “Controlled Equipment Impact Statement” means a publicly released, written document that includes, at a minimum, all of the following:

   (a) Description: A description of each type of Controlled Equipment, the quantity sought, its capabilities, expected lifespan, intended uses and effects, and how it works, including product descriptions from the manufacturer of the Controlled Equipment.

   (b) Purpose: The purposes and reasons for which the Milpitas Police Department (hereinafter, “Police Department”) proposes to use each type of Controlled Equipment.

   (c) Fiscal Cost: The fiscal cost of each type of Controlled Equipment, including the initial costs of obtaining the equipment, the estimated or anticipated costs of each proposed use, the estimated or anticipated costs of potential adverse impacts, and the estimated or anticipated annual, ongoing costs of the equipment, including operating, training, transportation, storage, maintenance, and upgrade costs.

   (d) Impact: An assessment specifically identifying any potential impacts that the use of Controlled Equipment might have on the welfare, safety, civil rights, and civil liberties of the public, and what specific affirmative measures will be implemented to safeguard the public from potential adverse impacts.

   (e) Mitigations: Specific, affirmative technical and procedural measures that will be implemented to safeguard the public from such impacts.

   (f) Alternatives: Alternative method or methods by which the Police Department can accomplish the purposes for which the Controlled Equipment is proposed to be used, the annual costs of alternative method or methods, and the potential impacts of alternative method or methods on the welfare, safety, civil rights, and civil liberties of the public.

Appendix

Policy - Controlled Equipment (Military Equipment)

708.1 PURPOSE AND SCOPE

The purpose of this policy is to provide guidelines for the approval, acquisition, and reporting of use requirements of controlled equipment, also defined as “military equipment” pursuant to Assembly Bill 481 (Government Code § 7070; Government Code § 7071; Government Code § 7072).

708.1.1 DEFINITIONS

Definitions related to this policy include (Government Code § 7070):

Governing body – The elected or appointed body that oversees the Department.

Controlled Equipment – Includes items defined in California Government Code section 7070, subsections (c)(1) through (c)(16); and any other item deemed to be controlled equipment by the governing body.

708.2 POLICY

It is the policy of the Milpitas Police Department that members of this department comply with the provisions of Government Code § 7071 with respect to controlled equipment.

708.3 CONTROLLED EQUIPMENT COORDINATOR

The Chief of Police, or designee, shall act as the controlled equipment coordinator. The responsibilities of the controlled equipment coordinator include but are not limited to:

(a) Acting as a liaison to the governing body to meet the requirements of this policy.

(b) Identifying equipment currently owned or used by the Milpitas Police Department, and that equipment the Department intends to acquire or use, that qualifies as controlled equipment and ensuring compliance with legislative mandates.

(c) Conducting an annual inventory of all controlled equipment.

(d) Collaborating with any allied agency that may use controlled equipment within the City of Milpitas (Government Code § 7071).

(e) Preparing for, scheduling, and coordinating an annual community engagement meeting to include:

1. Publicly noticing the meeting no less than 30 days in advance.

2. Preparing for public inquiries regarding the department’s funding, acquisition, and use of equipment.

(f) Preparing the annual controlled equipment report for submission to the Chief of Police and ensuring that the report is made available to the public on the department website (Government Code § 7072).

(g) Establishing a procedure for the public to register a complaint or concern, submit a question about the use of controlled equipment, and identify how the Department will respond.

708.4 CONTROLLED EQUIPMENT INVENTORY

A list of equipment currently held by the department or in coordination with another local agency is attached to this policy as Exhibit 1 and incorporated into this policy by reference. The inventory list will be updated each year as part of the annual report required pursuant to AB 481.

708.5 APPROVAL

The Chief of Police or the authorized designee shall obtain approval from the governing body by way of an ordinance adopting the controlled equipment policy. As part of the approval process, the Chief of Police or the authorized designee shall ensure the proposed controlled equipment policy is submitted to the governing body and is available on the department website at least 30 days prior to any public hearing concerning the controlled equipment (Government Code § 7071). The controlled equipment policy must be approved by the governing body prior to engaging in any of the following (Government Code § 7071):

(a) Requesting controlled equipment from the Federal Government pursuant to 10 USC § 2576a (Ex: 1033 Program)

(b) Seeking funds for controlled equipment, including but not limited to applying for a grant, soliciting or accepting private, local, state, or federal funds, in-kind donations, or other donations or transfers.

(c) Acquiring controlled equipment either permanently or temporarily, including by borrowing or leasing.

(d) Collaborating with another law enforcement agency in the deployment or other use of controlled equipment within the jurisdiction of this department.

(e) Using any new or existing controlled equipment for a purpose, in a manner, or by a person not previously approved by the governing body.

(f) Soliciting or responding to a proposal for, or entering into an agreement with, any other person or entity to seek funds for, apply to receive, acquire, use, or collaborate in the use of controlled equipment.

(g) Acquiring controlled equipment through any means not provided above.

708.6 EXIGENCY- PROCUREMENT AND USE
Nothing in this policy shall prohibit the procurement or use of controlled equipment when exigent circumstances exist. In rare circumstances, exigent circumstances may occur where the immediate procurement and use of controlled equipment may be necessary to preserve life, prevent physical harm to officers or other persons, prevent the destruction of relevant evidence, prevent the escape of the suspect, or maintain public safety. In the event such an event occurs, the Chief of Police or the authorized designee may authorize the procurement and use of controlled equipment. Any exigent procurement and/or use of controlled equipment will be reported to the governing body, in writing, unless such information is confidential or privileged under local, state, or federal law.

708.7 ANNUAL REPORT
Upon approval of a controlled equipment policy, the Chief of Police or their authorized designee shall submit a controlled equipment report to the governing body for each type of controlled equipment approved within one year of approval, and annually thereafter for as long as the controlled equipment is available for use (Government Code § 7072).

The Chief of Police or the authorized designee shall also make each annual controlled equipment report publicly available on the department website for as long as the controlled equipment is available for use. The report shall include all information required by Government Code § 7072 for the preceding calendar year for each type of controlled equipment in department inventory.

708.8 COMMUNITY ENGAGEMENT
Within 30 days of submitting and publicly releasing the annual report, the Department shall hold at least one well-publicized and conveniently located community engagement meeting, at which the Department should discuss the report and respond to public questions regarding the funding, acquisition, or use of controlled equipment.

708.9 MAINTENANCE AND RESUPPLY OF CONTROLLED EQUIPMENT
In the event a previously approved supply of controlled equipment falls below the approved quantity, the Department may replenish the supply, as needed, without first obtaining additional approval from the Governing Body.

CITY OF MILPITAS
Public Safety and Emergency Preparedness Commission

MEETING MINUTES DRAFT

7:00 p.m.
Thursday, March 20, 2025
Milpitas City Hall – Committee Room
455 E. Calaveras Blvd., Milpitas, CA 95035

CALL TO ORDER Chair Berryhill called the meeting to order at 7:00 P.M.

PLEDGE of ALLEGIANCE Chair Berryhill led the pledge of allegiance.

ROLL CALL OEMC Charlop called the roll.

PRESENT: Berryhill, Clendenin, Gan, Nakapalau, Yip-Chuan, Morales, Hogg, Shah
Councilmember: Lam
Staff: Battalion Chief Bankston, Deputy Chief Zamora, Capt. Jamison, Lt. Kyle Sanchez, OEM Coordinator Charlop

ABSENT: Cacao, Luu

SEATING OF ALTERNATES None.

APPROVAL OF AGENDA March 20, 2025 Motion/Second: Clendenin/Nakapalau
Motion carried by a vote of all AYES.

APPROVAL OF MINUTES November 21, 2024 Motion/Second: Nakapalau/Clendenin
Motion carried by a vote all AYES, Abstentions: Hogg, Morales

PUBLIC FORUM No public forum.

ANNOUNCEMENTS

A. VTA Survey
B. Remind commissioners about term expiration and to notify the Mayor and Clerk.

PRESENTATIONS Presentation of Assembly Bill 481 – Controlled Equipment Report (Milpitas Police)

BUSINESS ITEMS

A. Elections
   1. Chair: Nominees include Berryhill and Morales. Berryhill wins votes 5 to Morales 2.
   2. Vice-Chair: Morales runs uncontested.
   3. Review Past and Upcoming Public Education Events:
      Review:
      a. Holi Festival at Cardoza Park, 3/8: great turn out, began the public education outreach campaign for Genasys.
      b. CPR/AED Training Class at the Library, 3/13: 44 attendees, MFD Engine 86 joined, promoted Genasys at the event.

Upcoming:

a. Bring “Stop the Bleed” Course to Milpitas
b. Family Camp Out 7/26
c. National Night Out 8/5
d. Pumpkins in the Park 10/25
e. MUSD Health Fair
f. Other

B. 2025 Work Plan Adoption: Review of Genasys, re-assigned work plan groups due to new commissioners.

LIAISON REPORT

A. Council Report (Councilmember Lien):

1. Garbage fees are being increased by 9.19%. Senior discounts apply for those 62 and older.
2. Rivian moving into the City by the end of the year.
3. Mid-year 2024-25 report and budget in review for 2025/26 adoption.
4. Kron Castle planning to install fiber optic cable in Milpitas.
5. Jan. 1, 2027 there is a state mandate for water heaters to be electric.

A. MUSD Report (Schoolboard Member Yip-Chuan):

1. There are new members to the school board. Chris Norwood is now the President. Kelly Yip-Chuan is Vice-President. Robert Jung has joined the school board.
2. Measure Q passed, MUSD is in the process of forming an Oversite Committee
3. MUSD is heavily recruiting to bring students over to the Innovation Campus. $280M to renovated campus.
4. Cal Hills High School now hosts 9th grade.

B. Emergency Management Report (OEM Coordinator Charlop):

1. The 2025 CERT Calendar is complete.
2. CERT new member class begins April 12th, running April 19th and 26th.
3. Berryhill reported out about the new RACES equipment acquired.

C. Fire (BC Bankston):

1. MFD is short one Captain and one Firefighter Paramedic, with another firefighter paramedic to retire in April.
2. MFD has three conditional offers out to potential firefighters.

D. Police (Lt. Jamison):

1. MPD has 12 vacant police officer positions, they have made four conditional offers- two laterals and two entry level officers joining.
2. MPD has promoted Officer Lynch, Heylen, Sanchez and Jamison.

ADJOURNMENT

Chair Berryhill adjourned the meeting at 8:20 p.m. Next meeting is May 15, 2025.

DRAFT

DRAFT

CITY OF MILPITAS
AGENDA REPORT
(AR)

Item Title:	**Approve and Authorize the City Manager, or Designee, to Execute Amendment No. 1 to the Funding Agreement between the City of Milpitas and the Santa Clara Valley Transportation Authority for the Calaveras Boulevard Widening Project, CIP No. 4258 (Staff Contact: Christian Di Renzo, Public Works Director, 408-586-2602)**
Category:	Consent Calendar-Community Development
Meeting Date:	4/15/2025
Recommendation:	Approve and authorize the City Manager, or designee, to execute Amendment No. 1 to the Funding Agreement between the City of Milpitas and the Santa Clara Valley Transportation Authority for the Calaveras Boulevard Widening Project, CIP No. 4258.

BACKGROUND:

The Calaveras Boulevard Widening Project, CIP No. 4258 (Project), is in the Adopted FY 2025-2029 Capital Improvement Program (CIP). The Project provides for the design and construction for the replacement of the bridges that are to include three travel lanes and pedestrian and bicycle facilities in both directions between Milpitas Boulevard and Abel Street along Calaveras Boulevard.

Calaveras Boulevard is a State-owned and operated highway (SR 237) and is a critical 6-lane transportation artery providing residents and businesses access to I-680 and I-880 freeways and local streets through the City of Milpitas. However, it reduces from 6-lanes to 4-lanes at the bridge structures creating traffic congestion. On January 3, 2006, the City and Santa Clara Valley Transportation Authority (VTA) entered into a cooperative agreement to prepare the Project Study Report (PSR) for the Project. VTA completed the PSR in September of 2009 and determined the traffic congestion at the bridge structures would worsen as growth continued in the region, and that widening of the bridge structures to 6 lanes would provide traffic congestion relief.

Because projects on State highways typically take many years to complete, the City Council adopted the Calaveras Boulevard Widening Traffic Impact Fee in 2009 that applies to private development projects that generate additional vehicle trips to help accelerate the Project delivery by establishing a revenue source for the City's future funding obligation.

Santa Clara County voters passed 2016 Measure B which is a 30-year half cent countywide sales tax initiative to enhance transit, highways, expressways and active transportation. In October 2021, staff submitted a Measure B funding application to VTA for the 10-year Expenditure Program competitive call-for-projects which was eventually recommended for funding by the VTA program scoring committee. The 2016 Measure B Program Category Guidelines under the Highway IC Category requires the Project to provide a minimum 10% non-2016 Measure B funding contribution. At the time of the application, the City generated approximately $5.0 million in traffic impact fees from development projects which can only fund the completion of the Project Approval and the Environmental Document (PA&ED) phase. As VTA recognizes the importance of the Project in the region, the City and VTA entered into an agreement to complete the PA&ED phase in the amount of $5.0 million approved by the City Council on December 7, 2021 (Attachment 1) to advance the Project's delivery and aid in competing for funding from County, State and/or Federal transportation grants. The agreement was funded by the TASP Impact Fee Fund ($3.5 million) and the Calaveras Boulevard Widening Traffic Impact Fee Fund ($1.5 million).

The City and VTA will coordinate and work on obtaining Highway IC Category funds for the design, Right-of-Way, and construction phases of the Project by applying to and complying with the 2016 Measure B Highway Interchange Program Prioritization and Project Selection Process after the PA&ED phase has been approved and completed.

ANALYSIS:
The Project is currently in the PA&ED phase and this phase is anticipated to be completed by the Fall of 2026. VTA has made significant progress on the preliminary design, but is still working on resolving Right-of-Way matters with Caltrans and Union Pacific Railroad (UPRR). The columns of the bridge structures require encroachment into their properties to minimize the cost of the Project and will require additional time in order to determine the best option moving forward. The agreement between the City and VTA has expired and requires an extension so that VTA may continue their efforts on the Project upon approval, the design phase is anticipated to start by the end of 2026 in order to start construction in 2029, pending approval of the PA&ED and funding for the remaining phases of the Project.

Staff recommends the City Council approve and authorize the City Manager to execute Amendment No. 1 to the Funding Agreement with VTA (Attachment 2) to extend the term of the agreement to June 30, 2026 when the PA&ED phase is anticipated to be completed.

POLICY ALTERNATIVE(S):

Alternative 1: Deny approval and authorization of Amendment No. 1 to Funding Agreement with VTA.

Pros: None

Cons: Not approving Amendment No. 1 would prevent VTA from completing the PA&ED phase of the Project.

Reason for Not Recommending: A denial would delay the completion of this critical transportation infrastructure project that will provide traffic congestion relief benefiting the residents and businesses of the City.

FISCAL IMPACT:
There is no fiscal impact from this action.

CALIFORNIA ENVIRONMENTAL QUALITY ACT (CEQA):
As part of the Milpitas and VTA funding agreement, VTA will prepare the necessary environmental documentation for the City's Calaveras Boulevard Widening Project, Project No. 4258 in compliance with California Environmental Quality Act.

RECOMMENDATION:
Approve and authorize the City Manager, or designee, to execute Amendment No. 1 to the Funding Agreement between the City of Milpitas and the Santa Clara Valley Transportation Authority for the Calaveras Boulevard Widening Project, CIP No. 4258.

ATTACHMENT(S):
(a) Funding Agreement
(b) Amendment

DocuSign Envelope ID: 90AC8FE1-74CB-4CEC-9FF9-36B2AE8FF6D8

EPD202201-1127
Received 28 January 2022

FUNDING AGREEMENT
BETWEEN THE CITY OF MILPITAS AND
SANTA CLARA VALLEY TRANSPORTATION AUTHORITY
FOR THE STATE ROUTE 237 – CALAVERAS BOULEVARD WIDENING PROJECT

THIS AGREEMENT ("Agreement") dated 1/28/2022, ~~2021~~, for purposes of reference, is made and entered into by and between the CITY OF MILPITAS, a municipal corporation of the State of California ("CITY"), and SANTA CLARA VALLEY TRANSPORTATION AUTHORITY, a public agency organized as a special district under California law ("VTA"). Hereinafter, CITY and VTA may be individually referred to as "Party" or collectively referred to as "Parties".

I. RECITALS

A. Where WHEREAS, CITY and VTA entered into a cooperative agreement to prepare the Project Study Report ("PSR") for State Route 237/Calaveras Boulevard Widening Project on January 3, 2006; and

B. WHEREAS, the PSR evaluated alternatives to improve traffic operations Calaveras Boulevard in the City of Milpitas, California; and

C. WHEREAS, the PSR for Calaveras Boulevard Widening was completed in September 2009 and approved by the State of California Department of Transportation ("Caltrans") on February 24, 2010; and

D. Whereas, on June 24, 2016, the VTA Board of Directors adopted a resolution to place a ballot measure before the voters of Santa Clara County in November 2016 to authorize a one-half of one percent retail transaction and use tax ("**2016 MEASURE B**") for 30 years for nine transportation-related program categories; and

E. Whereas, on November 8, 2016, the voters of Santa Clara County enacted 2016 MEASURE B for 30 years to pay for the nine transportation-related program categories; and

F. Whereas, on October 5, 2017, the VTA Board of Directors established the 2016 Measure B Program ("PROGRAM") and adopted the 2016 Measure B Program Category Guidelines; and

G. Whereas, the PROGRAM includes a "Highway Interchange" program category (HIGHWAY IC CATEGORY), which includes a list of eligible projects, that funds highway projects throughout the valley; and

DocuSign Envelope ID: 90AC8FE1-74CB-4CEC-9FF9-36B2AE8FF6D8

H. Whereas, the 2016 Measure B Program Category Guidelines for the HIGHWAY IC CATEGORY requires a minimum 10% non-2016 Measure B contribution for development of PROJECT; and

I. Whereas, CITY and VTA each recognize the need to improve traffic operations, improve local circulation and provide Complete Streets benefits in the City of Milpitas in the County of Santa Clara along Calaveras Boulevard between Abel Street and Milpitas Boulevard by widening the Calaveras Boulevard bridges over North Main Street and the UPRR/BART tracks hereinafter referred to as "PROJECT "; and

J. Whereas, the PROJECT is eligible to receive HIGHWAY IC CATEGORY funds; and

K. Whereas, in June 2009, the Milpitas City Council: (i) established a traffic impact fee for private development for the Calaveras Boulevard Widening project and a Five Million Dollars ($5,000,000) in traffic impact fees was collected by April 2021; and (ii) identified that these funds may be used towards CITY's matching contribution towards the PROJECT; and

L. Whereas, CITY and VTA would like to begin the Project Approval and Environmental document ("PA&ED") phase of the PROJECT; and

M. Whereas, on August 5, 2021, the VTA Board of Directors established the 2016 Measure B Highway Interchange Program Prioritization and Project Selection Process and directed staff to develop a ranked priority list of HIGHWAY IC CATEGORY projects; and

N. Whereas, as a result of the August 5, 2021, VTA Board action, allocation of HIGHWAY IC CATEGORY funds for the final design (PS&E), right-of-way (ROW), and/or construction phases of the PROJECT is not guaranteed and is dependent on the results of the selection process; and

O. Whereas, CITY and VTA will coordinate and work on obtaining HIGHWAY IC CATEOGORY funds for the PS&E, ROW, and construction phases of the PROJECT by submitting an application to and complying with the 2016 Measure B Highway Interchange Program Prioritization and Project Selection Process as identified; and

P. Whereas, this Agreement is intended to delineate the duties, and funding responsibilities of the Parties for the PROJECT.

NOW, THEREFORE, in consideration of the mutual promises contained in this Agreement, the Parties agree as follows:

II. AGREEMENT

1. The PROJECT. The Parties agree to construct the PROJECT pursuant to the terms and

DocuSign Envelope ID: 90AC8FE1-74CB-4CEC-9FF9-36B2AE8FF6D8

conditions set forth herein.

2. **Scope of Work.** The Scope of Work is the PA&ED phase of the PROJECT, which includes but not limited to: (i) obtaining all necessary permits and approvals required from all governmental or regulatory agencies and/ or entities having jurisdiction over the PROJECT; and (ii) those planning and design activities necessary to complete the PA&ED phase.

3. **Cost of PROJECT.** The anticipated total cost of the PROJECT is One Hundred Forty-Three Million Four Hundred Fifty Thousand Dollars ($143,450,000).

4. **CITY'S Financial Contribution**. CITY agrees to contribute to the PROJECT an amount not to exceed Five Million Dollars ($5,000,000) (hereinafter "CITY'S Contribution") towards the development of the PA&ED phase of the PROJECT.

5. **Use of CITY's Contribution.** VTA will use the CITY's Contribution and the interest earned thereon for allowable costs and expenses for the sole purpose of completing the PA&ED phase of PROJECT, as set forth in this Agreement.

   Upon execution of the Agreement, VTA shall invoice CITY for the CITY's Contribution, and, upon receipt, will deposit the CITY's Contribution into an interest-bearing account. CITY shall pay to VTA the CITY's Contribution within thirty (30) calendar days after receipt of invoice.

   Should the PROJECT be awarded HIGHWAY IC CATEGORY funds as a result of the 2016 Measure B Highway Interchange Program Prioritization and Project Selection Process, CITY's Contribution and any interest earned will be considered as part of the required minimum 10% non-2016 Measure B contribution of total PROJECT cost.

   CITY's financial contribution towards design, right-of-way and Construction phases will be subject to future negotiation and mutually agreed upon in a written amendment to this agreement.

6. **City's Role in PROJECT.** During the term of the PROJECT, CITY shall provide CITY staff oversight of, and participation in, the PROJECT, and necessary and appropriate coordination with all departments of the CITY. The CITY is not expected to take on an administrative role or hire consultants for the PROJECT, but may inspect work on the PROJECT as desired. CITY will issue, if required, necessary encroachment permits for the PROJECT at no cost where the work meets the CITY's encroachment permit requirements. After reasonable opportunity to review PROJECT's documents and subject to the CITY's discretion, the CITY shall provide timely reviews, comments, and approvals of PROJECT's documents submitted by VTA to CITY. CITY will attend any Project Development Team meetings. CITY costs incurred to administer and participate in the PROJECT as described in this Agreement will not be allowable costs against CITY's Contribution.

7. **VTA's Role in PROJECT.**

DocuSign Envelope ID: 90AC8FE1-74CB-4CEC-9FF9-36B2AE8FF6D8

a. Tasks. VTA shall perform and/or be responsible for the following tasks to complete the PROJECT:

i. Serve as project manager for PROJECT;
ii. Coordinate with the State of California and other relevant stakeholders as necessary to allow for review and approval of PROJECT;
iii. Complete Project Approval/Environmental Document (PA/ED) work for PROJECT;
iv. Complete activities necessary for the final design (PS&E) documents for PROJECT, subject to future funding;
v. Complete ROW activities, subject to future funding;
vi. Advertise, award, and administer Construction contract, subject to future funding;
vii. Conduct close-out activities for the PROJECT, subject to future funding.

Costs and expenses to perform these tasks shall be considered allowable costs and expenses pursuant to this Agreement.

b. Consultants. VTA may retain design consultants to perform any of the functions listed in Section II Article 3. VTA's administrative costs to procure and manage consultant agreements as well as the actual costs of such consultants shall be allowable costs pursuant to this Agreement.

c. Project Cost Updates. VTA shall actively monitor actual PROJECT expenditures to ensure that CITY's Contribution is used to pay for allowable PROJECT expenditures.

If an amount exceeding CITY's Contribution is required to complete the PA&ED phase of the PROJECT, VTA shall notify CITY in writing that additional funds are needed pursuant to Section II Article 4. VTA shall not perform any work until an amendment to this Agreement is executed, adding funds to cover the PA&ED phase of the PROJECT completion.

d. Other Project Management Duties VTA shall include CITY staff as an active participant within VTA's project management process, VTA will hold periodic project development team meetings as agreed upon by the PROJECT team to assess the progress of PROJECT and address PROJECT issues as they arise.

8. Compliance with Governmental Requirements. VTA shall comply with all laws and regulations pertaining to the PROJECT.

Compliance with 2016 Measure B requirements. In anticipation of future 2016 Measure B funds, VTA and CITY will comply with all 2016 Measure B requirements as identified in the 2016 Measure B Program and Program Guidelines for the HIGHWAY IC CATEGORY.

DocuSign Envelope ID: 90AC8FE1-74CB-4CEC-9FF9-36B2AE8FF6D8

9. **Term of Agreement.** This Agreement shall become effective upon full execution and shall remain in effect through the earlier of: (i) December 31, 2024, or (ii) completion of the PA&ED phase of the PROJECT. If the PA&ED phase of the PROJECT is delayed beyond December 31, 2024, or cancelled completely, either Party may terminate this Agreement which can be accomplished by either Party giving written notice to the other Party of such termination with a 30 day notice. Any unused funds will be returned to each Party. .This term of this Agreement can be extended by Amendment in accordance with Article 17.

10. **Audit and Record Retention.** CITY may audit the expenses incurred in the performance of this Agreement. VTA shall retain all records related to the PROJECT for three (3) years after the completion of PROJECT. During this period and during the PROJECT, VTA shall make these records available to the City for inspection within a reasonable time, upon City's written request. VTA will repay any portion of the City Contribution used for unallowable expenses as determined by the audit.

11. **Parties' Representatives.** The General Manager of VTA, or the General Manager's designee, is hereby made the representative of VTA for all purposes under this Agreement. The Director of the Public Works for CITY ("Director"), or the Director's designee, is hereby made the representative of CITY for all purposes under this Agreement.

12. **Indemnification.**

    a. Neither VTA nor any officer or employee thereof shall be responsible for any damage or liability occurring by reason of CITY's negligence, recklessness, or willful misconduct under or in connection with any work, authority or jurisdiction associated with the PROJECT. In addition, CITY shall fully indemnify and hold VTA harmless from any liability imposed for injury (as defined by Government Code §810.8) occurring by reason of CITY's negligence, recklessness, or willful misconduct under or in connection with any work, authority or jurisdiction delegated to CITY under this Agreement. This provision will survive the termination or expiration of this Agreement.

    b. Neither CITY nor any officer or employee thereof shall be responsible for any damage or liability occurring by reason of VTA's negligence, recklessness, or willful misconduct in the completion of any work associated with the PROJECT. In addition, VTA shall fully indemnify and hold CITY harmless from any liability imposed for injury (as defined by Government Code §810.8) occurring by reason of VTA's negligence, recklessness, or willful misconduct in the completion of the work, undertaken by VTA pursuant to this Agreement. This provision will survive the termination or expiration of this Agreement.

13. **No Waiver.** The failure of either Party to insist upon the strict performance of any of the terms of this Agreement shall not be deemed a waiver of any right or remedy that either Party may have and shall not be deemed a waiver of their right to require strict performance of all of the terms thereafter.

DocuSign Envelope ID: 90AC8FE1-74CB-4CEC-9FF9-36B2AE8FF6D8

14. **Notice.** Any notice required to be given by either Party, or which either Party may wish to give, shall be in writing and served either by personal delivery or sent by certified or registered mail, postage prepaid, addressed as follows:

To VTA: Santa Clara Valley Transportation Authority
Chief Engineering and Program Delivery Officer
3331 North First Street, Bldg. A
San Jose, CA 95134-1906

To CITY: City of Milpitas
Steve Erickson, City Engineer/Engineering Director
Department of Public Works
455 E. Calaveras Blvd.
Milpitas, CA 95035
serickson@ci.milpitas.ca.gov

Notice shall be deemed effective on the date personally delivered or, if mailed, three (3) days after deposit in the United States mail.

15. **Dispute Resolution.** If a question arises regarding interpretation of this Agreement or its performance, or the alleged failure of a Party to perform, the Party raising the question or making the allegation shall give written notice thereof to the other Party. The Parties shall promptly meet in an effort to resolve the issues raised. If the Parties fail to resolve the issues raised, alternative forms of dispute resolution, including mediation or arbitration, may be pursued by mutual agreement. It is the intent of the Parties to the extent possible that litigation be avoided as a method of dispute resolution.

16. **Entire Agreement.** This Agreement constitutes the entire Agreement between the Parties pertaining to the subject matter contained therein and supersedes all prior or contemporaneous agreements, representations, and understandings of the Parties relative thereto.

17. **Amendments.** No alteration or variation of the terms of this Agreement will be valid unless made in writing and signed by both of the Parties hereto, and no oral understanding or agreement not incorporated herein will be binding on any of the Parties hereto.

18. **Warranty of Authority to Execute Agreement.** Each Party to this Agreement represents and warrants that each person whose signature appears hereon has been duly authorized and has the full authority to execute this Agreement on behalf of the entity that is a Party to this Agreement.

19. **Severability**. If any term, covenant, condition or provision of this Agreement, or the application thereof to any person or circumstance, shall to any extent be held by a court of

competent jurisdiction to be invalid, void or unenforceable, the remainder of the terms, covenants, conditions and provisions of this Agreement, or the application thereof to any person or circumstance, shall remain in full force and effect and shall in no way be affected, impaired or invalidated thereby.

20. Governing Law. The laws of the State of California will govern this Agreement, as well as any dispute that might arise between VTA and CITY, without regard to conflict of law provisions.

WITNESS THE EXECUTION HEREOF the day and year first hereinabove set forth.

"CITY" City of Milpitas a municipal corporation	"VTA" Santa Clara Valley Transportation Authority a public agency
DocuSigned by: D9F94EEB50844F3...	DocuSigned by: D2267F28DC0541F...
Steven McHarris City Manager	Carolyn M. Gonot General Manager/CEO
Jan-27-2022	1/28/2022
Date	Date
APPROVED AS TO FORM:	APPROVED AS TO FORM:
DocuSigned by: 3286B08D07EF4B3...	DocuSigned by: 0849A5C9E5B6413...
Christopher Diaz City Attorney	TBD Judith Propp VTA Counsel

DocuSign Envelope ID: 90AC8FE1-74CB-4CEC-9FF9-36B2AE8FF6D8

Santa Clara Valley Transportation Authority

MEMORANDUM

TO: Carolyn Gonot, General Manager/CEO

FROM: Gene Gonzalo – Highway Program Manager

DocuSigned by:
Gene Gonzalo
59497F702DD7478...

DATE: January 28, 2022

SUBJECT: General Manager's signature for Funding Agreement between City of Milpitas and VTA for the SR 237 Calaveras Boulevard Improvements Project (P-1219)

On January 6, 2022, the VTA Board of Directors authorized the General Manager to execute cooperative agreements with Cities and Towns of Santa Clara County for planning, environmental, design, right-of-way, and construction phases of 2016 Measure B roadway projects. The 2016 Measure B Program includes the SR 237 Calaveras Boulevard Improvements Project in City of Milpitas.

On December 7, 2021, Joint Meeting of the Milpitas City Council, and the Milpitas Housing Authority approved and authorized to execute the funding agreement with the Santa Clara Valley Transportation Authority (VTA) for completion of the Project Approval/ Environmental Documentation (PA/ED) phase of the Project.

This funding agreement between City of Milpitas and VTA is for $5,000,000 for VTA to complete the PA/ED phase of the project. An amendment to this agreement will be needed for the subsequent final design, right-of-way, and construction phases.

The Funding Agreement between City of Milpitas and VTA will establish roles and responsibilities to complete the SR 237 Calaveras Improvements Project. This Funding Agreement was signed by City of Milpitas and will be executed upon receipt of VTA signatures.

Enclosures:
Funding Agreement
Board Memorandum dated January 6, 2022

Submitted by: Shanthi Chatradhi

3331 North First Street
San Jose, CA 95134-1927

Administration 408-321-5555
Customer Service 408-321-2300

Solutions that move you

DocuSign Envelope ID: 90AC8FE1-74CB-4CEC-9FF9-36B2AE8FF6D8

EPD202201-1064
Received 18 January 2022

6.6

Santa Clara Valley Transportation Authority

Date: January 3, 2022
Current Meeting: January 6, 2022
Board Meeting: January 6, 2022

APPROVED ACCEPTED ADOPTED AMENDED DEFERRED REVIEWED
Santa Clara Valley Transportation Authority
Board of Directors
Elaine R. Baltao, Board Secretary
BY:
DATE 1/6/22

BOARD MEMORANDUM

TO: Santa Clara Valley Transportation Authority Board of Directors

THROUGH: General Manager/CEO, Carolyn M. Gonot

FROM: Chief Engineering & Prog Delivery Officer, Casey Emoto

SUBJECT: VTA Highway Program Cooperative Agreement

Policy-Related Action: Yes **Government Code Section 84308 Applies: No**

ACTION ITEM

RECOMMENDATION:

Authorize the General Manager to execute Cooperative Agreements with:

1. California Department of Transportation (Caltrans);
2. Cities and Towns of Santa Clara County and the County of Santa Clara;
3. State and regional agencies such as the California Highway Patrol (CHP) and the Metropolitan Transportation Commission (MTC);
4. Special Districts such as the Santa Clara Valley Open Space Authority and the Midpeninsula Regional Open Space District; and
5. Private parties such as Google

for planning, environmental, design, right of way, and construction phases of highway program and highway program-related projects.

EXECUTIVE SUMMARY:

This request is to update and amend the project list that was approved by the VTA Board of Directors (Board) on January 10, 2019 with the projects approved by the Board for the Plan Bay Area 2050 Project List.

STRATEGIC PLAN/GOALS:

The VTA Highway Program's projects provide improved mobility and new active transportation infrastructure to encourage growth in non-motorized travel demand. These improvements are consistent with VTA's core values of safety, quality, and sustainability.

3331 North First Street
San Jose, CA 95134-1927
Administration 408-321-5555
Customer Service 408-321-2300

Solutions that move you

CERTIFIED COPY

DocuSign Envelope ID: 90AC8FE1-74CB-4CEC-9FF9-36B2AE8FF6D8

FISCAL IMPACT:

There are no direct fiscal impacts because of this action. However, the individual agreements could have a fiscal impact. To the extent that agreements are beyond the authorization of the General Manager, they will be brought to the Board for approval.

BACKGROUND:

On October 5, 2017, the Board adopted a resolution establishing the 2016 Measure B Program and the 2016 Measure B Program Category Guidelines. The 2016 Measure B Program includes the following roadway-related funding: $750 million for the Highway Interchanges Program, $350 million for the State Route 85 Corridor, and $750 million for the County Expressways Program.

On January 10, 2019, the Board authorized the General Manager to executive cooperative agreements with various agencies: Federal, State, County, and cities for planning, environmental, design, right of way, and construction phases of the highway and highway-related projects in the adopted VTP 2040 and the 2016 Measure B Highway Program.

On June 4, 2020, the Board approved VTA's Draft Plan Bay Area (PBA) 2050 Fiscally Constrained Project List (Project List) followed by submittal of the Project List for inclusion in the Regional Transportation Plan/Sustainable Communities Strategy (RTP/SCS) adopted by the Metropolitan Transportation Commission (MTC) and the Association of Bay Area Government (ABAG). The current adopted RTP/SCS is known as Plan Bay Area 2050 (PBA 2050). Funding for these projects is anticipated from the State Transportation Improvement Program (STIP), the 2016 Measure B sales tax, local contributions, State grants, Federal grants, and other sources.

DISCUSSION:

The purpose of this memorandum is to request a continuation of the authority granted on January 10, 2019 to the General Manager to enter into agreements with various agencies for the delivery of an identified list of highway and highway-related projects, but with this application to an updated list of projects.

The updated list of projects is due to the PBA 2050 Project List and the 2016 Measure B Highway Interchanges Program (see Attachments A and B). Funding made available through the various Senate Bill 1 (SB 1) programs and the 2016 Measure B Program allows many of the listed projects to be developed and delivered.

The staff recommendation is to authorize the General Manager (GM) to execute cooperative and funding agreements for highway and highway-related improvement projects with Caltrans, local agencies, regulatory agencies, regional agencies such as CHP and MTC, and special districts such as the Santa Clara Valley Open Space Authority and the Midpeninsula Regional Open Space District; and funding agreements with private parties such as Google for developing projects. The cooperative agreements would cover all phases of projects including planning, environmental, design, right of way, construction, and project closeout. This action to grant authority to the General Manager to enter into agreements needed for the delivery of capital

CERTIFIED COPY

DocuSign Envelope ID: 90AC8FE1-74CB-4CEC-9FF9-36B2AE8FF6D8

projects helps to streamline the process to initiate the start of projects and especially useful in such cases as with SB 1 funds where there are strict requirements for the award of contracts that could hinge on the ability to get cooperative agreements in place.

In the case of highway projects with significant involvement by VTA and Caltrans, the agreements would establish the roles and responsibilities of VTA and Caltrans for project phases through construction. The agreements could also establish grant funding reimbursement parameters.

For VTA and regulatory agencies, the agreements could establish VTA's commitments to environmental mitigation measures, VTA's compliance with regulatory agency standards and policies, and VTA's reimbursement of services provided by the regulatory agencies. The local agency agreements could identify local agency contributions toward a project and the roles and responsibilities of VTA and the local agency relative to the subject project. For special districts and private parties, the agreements would allow VTA to receive funding contribution for developing the projects that would provide benefits to both VTA and the private parties.

The VTA Administrative Code, Chapter 5, establishes the powers and duties of the GM including the delegated authority of the GM to execute grant agreements for amounts not to exceed $5,000,000 for projects and programs that are identified and included in VTA's budget. Section 9-23 of the VTA Administrative Code also allows the GM to enter into cooperative agreements with public agencies and public utilities: (a) in amounts up to $1,000,000; or (b) in connection with a public works construction project, in amounts up to $2 million, provided the construction project is budgeted and has been previously approved by the Board. If agreements are beyond the GM's authority under the administrative code, GM authorization to execute such agreements would be submitted to the Board for approval.

ALTERNATIVES:

An alternative to the recommendation of this memorandum is for staff to appear before the VTA Board of Directors to request GM authorization to enter into agreements for each individual project as was the practice prior to the January 10, 2019 action by the Board. However, this would have the risk of certain projects taking longer to get started.

The existing practice to have the GM with authority up to a certain threshold has worked well. Approval of this request would continue this practice moving forward for the projects included in this memorandum.

CLIMATE IMPACT:

The VTA Highway Program's projects have the potential to shift vehicle trips to bicycle or walking trips given the project's inclusion of improvements for these travel modes. The active transportation improvements included in this request offer an ability to help decrease vehicle miles traveled by reducing travel demand for trips by motor vehicles.

CERTIFIED COPY

DocuSign Envelope ID: 90AC8FE1-74CB-4CEC-9FF9-36B2AE8FF6D8

STANDING COMMITTEE DISCUSSION/RECOMMENDATION:

The Congestion Management Program and Planning Committee received this item at their December 16, 2021 meeting and recommended Board approval.

Prepared by: Lam Trinh - Project Manager
Memo No. 7994

ATTACHMENTS:

- Attachment A - VTP 2050 Project List (PDF)
- Attachment B - 2016 Measure B Highway Program (PDF)
- Public Comment (PDF)

I certify that the foregoing instrument is a true and exact copy of the original on file in the Secretary of the Board of Director's office.

Regina Jenens

Date 1/20/2022

DocuSign Envelope ID: 90AC8FE1-74CB-4CEC-9FF9-36B2AE8FF6D8

ATTACHMENT A - PLAN BAY AREA 2050 PROJECT LIST

#	Title	Description	Preliminary Start Date	Anticipated Opening Date	Sponsor	Plan Bay Area 2040 ID	Total Project Cost in Millions ($YOE)*
Programmatic Categories							
1	Future Transit Corridor Studies Program	Placeholder for future transit corridor studies	2021	2040	VTA	17-07-0066	$100
2	Fast Transit Implementation Program	System-wide improvements that prioritize transit to improve speed and reliability. Improvements could include: Hardware and software upgrades to support TSP pilot projects; upgrading countywide signals and controller boxes to enable cloud-based TSP; tactical bus lanes; enhanced bus lanes; queue jumps; bypass lanes; in lane stopping treatments such as straightening duckouts and building curb extensions or boarding islands; stop improvements such as fixing curbs at bus stops to provide level boarding; faster boarding improvements such as equipment that supports faster fare collection, all door boarding, and off board fare collection; software and hardware upgrades for improved headway management.	2021	2040	VTA	New	$500
3	High Capacity Transit Corridors Program	Construction of the first phase of high capacity transit corridors that will come out of the Strategic Plan for Advancing High Capacity Transit Corridors.	2021	2040	VTA	New	$500
4	Bicycle and Pedestrian Program	Bicycle and Pedestrian Projects outlined in Measure B; Also includes projects identified by the Countywide Bicycle Program, Local City Bicycle Plans, and other local Pedestrian Plans. Program also includes Bicycle Superhighway.	2021	2040	Multi Agency	New	$400
5	Minor Streetscape Improvements/Complete Streets Program	Projects in this category implement multimodal elements throughout Santa Clara County. Complete Streets projects identified by local agencies that improve multimodal access.	2021	2040	Multi Agency	New	$425
6	Local Intersection Improvements Program	Minor roadway expansion less than 1/4 mile. Includes intersection improvements by local agencies.	2021	2040	Multi Agency	New	$425
7	Local Station Access Projects Program	Implement Station Area Access Projects for future BART, Caltrain and Light Rail Stations	2021	2040	Multi Agency	New	$237
8	Intelligent Transportation Systems Program	Implement Systems Operations and Management Program for Santa Clara County.	2021	2040	Multi Agency	New	$250
9	Future Caltrain Grade Separation Program - Design and Engineering	Assistance to Member Agencies to study future Caltrain Grade Separations not covered in 2016 Measure B.	2021	2040	Multi Agency	New	$125
10	Local Priority Development Area Implementation Program	Assistance to Member Agencies to address implementation of Priority Development Areas.	2021	2040	Multi Agency	New	$33
11	Climate Action Improvement Program	Projects in this category implement strategies and programs that reduce emissions, encourage alternative transportation modes, and manage transportation demand.	2021	2040	Multi Agency	New	$118
Projects							
12	Measure B Affordable Fares	Program objective is to increase ridership by reducing the cost of transit services for low-income populations including seniors, persons with disabilities, youth and students.	2017	2040	VTA	17-07-0007	$44
13	BART Silicon Valley Extension - San Jose (Berryessa) to Santa Clara	The Berryessa Station to San Jose Extension Project would physically extend BART from the future BART Berryessa Station in San Jose to Downtown San Jose and then into Santa Clara. Project includes four new stations - Alum Rock, Downtown San Jose, Diridon, and Santa Clara.	2000	2030	VTA	17-07-0012	$5,581
14	Implement El Camino Rapid Transit Project	Transit speed and passenger amenity improvements along the El Camino corridor.	2000	2040	VTA	17-07-0013	$24
15	Alviso Wetlands Doubletrack	Improvements study for railroad tracks in the Alviso wetland in order to improve resiliency of railroad infrastructure, enhance species and habitat restoration, and ensure that such infrastructure can support plans for increased train capacity between Oakland and the South Bay.	2017	2023	ACE	17-07-0021	$200
16	Measure B Bus Stop Improvements	Enhance transit waiting environments by improving accessibility and amenities at VTA bus stops.	2017	2040	VTA	17-07-0056	$47
17	Measure B Frequent Core Bus Network - 15 minutes	Provide 15-minute all day bus service on VTA's highest ridership routes	2017	2040	VTA	17-07-0057	$658
18	Extend Capitol Expressway light rail to Eastridge Transit Center - Phase II	This project will extend light rail from the existing Alum Rock Light Rail Station to the Eastridge Transit Center with elevated structures at Capitol Avenue, Story Road, and Tully Road. The Eastridge extension will include light rail stations at Story Road and at the Eastridge Transit Center.	2000	2025	VTA	17-07-0061	$453
19	Extend light-rail transit from Winchester Station to Route 85 (Vasona Junction)	Extends light rail from Winchester Station to Route 85 (Vasona Junction).	2030	2040	VTA	17-07-0062	$347
20	Mineta San Jose International Airport APM connector - planning and environmental	The Airport People Mover Project will provide a dedicated guideway connection from Mineta San Jose International Airport to the Caltrain and future BART stations at the Santa Clara Transit Center, and the VTA Light Rail on North First Street.	2000	2025	Multi Agency	17-07-0063	$200
21	Caltrain Enhanced Growth Scenario	The project includes enhanced service levels that will maximize the use of available infrastructure and more fully serve expected market demand on the Caltrain corridor over the next decade and beyond. It envisions growing in 2022 (FY23) to 6, 7-car trains per peak hour per direction (tphpd) (~168 trains per day), and in 2027 (FY28) to 8, 7-car trains per peak hour per direction (~204 trains per day). The project includes capital improvements needed to support growth in train service, such as additional electric train fleet, more train storage, and station improvements. The total cost is $1.211 billion, the amount shown is VTA's share.	2017	2022	JPB	17-07-0065	$400
22	Mtn View Transit Center Improvements	Improvements to accommodate the increased number of Caltrain and light rail riders by adding underground parking and expanding bus/shuttle transfer area.	2030	2040	Mtn View	New	$150

CERTIFIED COPY

DocuSign Envelope ID: 90AC8FE1-74CB-4CEC-9FF9-36B2AE8FF6D8

#	Title	Description	Preliminary Start Date	Anticipated Opening Date	Sponsor	Plan Bay Area 2040 ID	Total Project Cost in Millions (5YOE)*
23	Downtown Coordinated Area Plan and Transit Center Improvements	Planning and construction of Palo Alto Avenue grade separation and multimodal Transit Center improvements , including bike/pedestrian undercrossing upgrades and new Everett bike/ped crossing between Alma and El Camino Real. Includes offsite access improvements such as improved multi-modal facilities/Complete Streets on routes to the station	2030	2040	Palo Alto	New	$300
24	Diridon Station Improvements	VTA's BART Diridon Station will be located adjacent to the south side of West Santa Clara Street, between Autumn Street and the San José Diridon Caltrain Station. This station would consist of a below-ground concourse and boarding platform. Street-level pedestrian connections will be provided to the Diridon Caltrain Station and VTA's Diridon Light Rail Station. This station will also include bicycle facilities. The station area will be integrated with mixed use development, creating a transit oriented community.	2000	2040	VTA/San Jose	New	$3,263
25	SR 87 Technology-based Corridor Improvements	Improvements in San Jose to address mainline congestion and system reliability through the implementation of technology-based operational improvements to the freeway.	2017	2036	VTA	17-07-0009	$43
26	Hwy. Transportation Operations System/Freeway Performance Initiative Phase 1 & 2	Implement Freeway Performance Initiative projects for Santa Clara County, which includes freeway ITS infrastructure, arterial management, incident management, emergency preparedness, and operations and maintenance of ITS infrastructure.	2017	2036	VTA	17-07-0010	$58
27	Environmental Studies for SR-152 New Alignment	Project includes further environmental and planning studies for the SR-152 corridor, including a new alignment and potential toll options.	2016	2030	VTA	17-07-0022	$50
28	US 101/Zanker Rd./Skyport Dr./Fourth St. Interchange Improvements	Construct a new interchange at U.S. 101/Zanker Road/Skyport Drive/Fourth Street including complete streets improvements.	2024	2027	Multi Agency	17-07-0023	$184
29	Lawrence/Stevens Creek/I_280 Interchange	Lawrence/Stevens Creek/I-280 Interchange: Provide direct connections between Lawrence Expressway and I-280	2028	2036	Multi Agency	17-07-0024	$120
30	I-280/Winchester Blvd Interchange Improvements	Improve I-280/ Winchester Blvd Interchange to relieve congestion and improve operations and local circulation. This will also incorporate complete streets elements.	2030	2036	Multi Agency	17-07-0025	$100
31	I-280/Wolfe Road Interchange Improvements	Modify I-280/Wolfe Road Interchange to relieve congestion and improve local circulation. This will also incorporate complete streets elements.	2027	2036	Multi Agency	17-07-0026	$92
32	US 101/Mabury Rd./Taylor St. Interchange Improvements	Construct interchange at U.S. 101/Mabury Road/Taylor Street with complete streets improvements.	2030	2036	Multi Agency	17-07-0027	$76
33	I-280 Mainline Improvements from County line to Sunnyvale	New HOV lane added to I-280 from existing HOV lane at Magdalena Avenue to the San Mateo County Line. Requires constructing a new lane.	2028	2036	Multi Agency	17-07-0028	$103
34	I-280/Saratoga Avenue Interchange Improvements	Modify I-280/ Saratoga Avenue Interchange to relieve congestion and improve local circulation through complete streets improvements.	2030	2036	Multi Agency	17-07-0029	$54
35	I-280 Northbound Braided Ramps between Foothill Expressway and SR 85	Improve braided ramps on northbound I-280 between Foothill Expressway and Route 85.	2030	2036	Multi Agency	17-07-0030	$51
36	US 101 Southbound/Trimble Rd./De La Cruz Blvd./Central Expressway Interchange Improvements	Improve interchange at U.S. 101 southbound Trimble Road/De la Cruz Boulevard/Central Expressway. This project will incorporate complete streets elements.	2017	2025	Multi Agency	17-07-0031	$68
37	I-680/ Alum Rock/ McKee Road Interchange Improvements	Reconfigure interchange, improve traffic operations and relieve congestion at the I-680/ Alum Rock and I-680/ McKee Road interchanges. Construct an Express Bus Station in the Median of I-680 to connect buses using HOV or Express Lanes with Santa Clara Alum Rock BRT Station.	2030	2036	Multi Agency	17-07-0032	$43
38	SR 237/Mathilda Ave. and US 101/Mathilda Ave. Interchange Improvement	Modify US 101/Mathilda and SR 237/Mathilda interchanges, reducing to one signalized intersection and increasing intersection spacing in the Mathilda Ave./SR 237 interchange area. Project to include ramp improvements, addition of auxiliary lanes, construction of new ramp configurations, and complete streets elements.	2017	2025	Multi Agency	17-07-0033	$45
39	US 101 Interchanges Improvements: San Antonio Rd. to Charleston Rd./Rengstorff Ave.	Improve U.S. 101 interchanges at San Antonio Road to Charleston Road/Rengstorff Avenue including new auxiliary lane. This project will incorporate complete streets elements.	2021	2028	Multi Agency	17-07-0034	$40
40	US 101/Buena Vista Ave. Interchange Improvements	Construct a full interchange at US 101 and Buena Vista Avenue in Gilroy. The interchange includes a flyover southbound on-ramp to braid with the existing truck exit at the CHP Inspection Station and complete streets elements. Off-ramp diagonal ramps will be constructed.	2021	2030	Multi Agency	17-07-0035	$40
41	SR 85 Northbound to Eastbound SR 237 Connector Ramp and Northbound SR 85 Auxiliary Lane	Widen off-ramp from Northbound SR 85 to SR 237 Eastbound to two lanes; construct auxiliary lane on Eastbound SR 237 between SR 85 on-ramp to Middlefield Rd.; construct braid off-ramp on Eastbound SR 237 between SR 85 and Dana St.	2030	2036	Multi Agency	17-07-0036	$38
42	SR 85/El Camino Real Interchange Improvements	Improve SR 85 auxiliary lanes between El Camino Real and SR 237, and SR 85/El Camino Real interchange.	2030	2036	Multi Agency	17-07-0037	$42
43	US 101/Blossom Hill Rd. Interchange Improvements	Widen interchange at U.S. 101/Blossom Hill Road. This project will provide complete street improvements.	2021	2023	Multi Agency	17-07-0038	$27
44	US 101/Old Oakland Rd. Interchange Improvements	Improve interchange at U.S. 101/Old Oakland Road. This project will provide complete street improvements.	2022	2024	Multi Agency	17-07-0039	$27
45	US 101/Shoreline Blvd. Interchange Improvements	Interchange improvements at Shoreline Boulevard. This project will provide complete street improvements.	2023	2025	Multi Agency	17-07-0040	$16
46	SR 237/Great America Parkway WB Off- Ramps Improvements	Widening existing offramp.	2022	2024	Multi Agency	17-07-0042	$14

CERTIFIED COPY

DocuSign Envelope ID: 90AC8FE1-74CB-4CEC-9FF9-36B2AE8FF6D8

ATTACHMENT A - PLAN BAY AREA 2050 PROJECT LIST

#	Title	Description	Preliminary Start Date	Anticipated Opening Date	Sponsor	Plan Bay Area 2040 ID	Total Project Cost in Millions ($YOE)*
47	SR 237/El Camino Real/Grant Rd. Intersection Improvements	Widen Westbound SR 237 within the existing median to extend both of the left-turn lanes; lengthen the Northbound El Camino Real right-turn lane onto SR 237 starting the lane at Yuba Drive; widen the Southbound El Camino Real left-turn lane within the existing median; and construct a right-turn lane on Southbound El Camino Real for traffic accessing Westbound Grant Rd.	2021	2023	Multi Agency	17-07-0043	$6
48	Widen Calaveras Blvd. overpass from 4 to 6 lanes	Replaces the existing four lane bridge, which currently has a single sidewalk and no bicycle lane over the Union Pacific (UP) Railroad tracks, to a six lane bridge. Project will also add sidewalks and bicycle lanes in both directions.	2030	2036	Multi Agency	17-07-0051	$92
49	Other County Program: Safety, Security, Noise	General noise abatement program for countywide	2021	2040	Multi Agency	17-07-0064	$54
50	SR 17 Corridor Congestion Relief in Los Gatos	Operational improvements for the SR 17 Corridor, including upgrading Highway 17/Highway 9 interchange to improve pedestrian and bicycle safety, mobility, and roadway operations; deploying advanced transportation technology to reduce freeway cut thru traffic in Los Gatos, including traffic signal control system upgrades in Los Gatos, traveler information system, advanced ramp metering systems and multi-modal congestion relief solutions	2021	2027	Multi Agency	17-07-0067	$50
51	237 WB Additional Lane from McCarthy to North First	Corridor improvements in the cities of San Jose, Santa Clara and Milpitas to address mainline congestion and regional connectivity by the addition of SR 237 westbound auxiliary lane between McCarthy Boulevard and North First Street	2021	2025	Multi Agency	17-07-0068	$32
52	US 101/SR 25 Interchange	The project consists of reconfiguring the interchange at US 101 and SR 25 just south of the City of Gilroy in Santa Clara County, connecting SR 25 and Santa Teresa Boulevard, and widening the existing freeway from 4 to 6 lanes from the Monterey Street interchange to the US 101/SR 25 interchange.	2017	2023	Multi Agency	17-07-0069	$250
53	Envision Highway Minor Projects	Includes: 1-280 NB Second exit lane to Foothill Expressway; SR 17 SB/Hamilton Ave Off-Ramp widening; San Tomas expressway at SR-17 Improvements; US101/SR 152 10th Street Ramp and Intersection Improvements; and Charcot Avenue Extension over I-880	2021	2036	Multi Agency	17-07-0079	$60
54	I-280 Downtown Access Improvements between 3rd St. and 7th St.	Improve I-280 downtown access between 3rd Street and 7th Street.	2035	2040	Multi Agency	New	$34
55	I-280/Bird Interchange Improvements	Improve the bike and ped facilities from Virginia Street, northward through the interchange, to San Carlos Street. The project would also consider signal and signal timing improvements and other roadway and interchange ramp modifications.	2025	2028	Multi Agency	New	$9
56	I-680/Montague Expwy. Interchange Improvement	Improve interchange at I-680/Montague Expressway. Widen Montague Expressway from 4 to 6 lanes between Dempsey and Pectin; including modifications to I-680 interchange in Milpitas. This project will provide complete street improvements.	2030	2036	Multi Agency	New	$54
57	I-880/Montague Expwy. Interchange Improvement	Improve interchange at I-880/Montague Expressway. Construct Partial Clover interchange at I-880 and Montague Expressway, including improvements on Montague. This project will provide complete street improvements.	2030	2036	Multi Agency	New	$19
58	South County US 101 Ramp Metering	Various ramp metering projects in Morgan Hill and Gilroy	2021	2036	Multi Agency	New	$78
59	SR 237 Eastbound Auxiliary Lanes: Mathilda Ave. to Fair Oaks Ave.	Widen to add auxiliary lanes.	2024	2030	Multi Agency	New	$8
60	SR 237 Westbound On-Ramp at Middlefield Rd.	Construct Route 237 westbound on-ramp from Middlefield Road to Route 237 westbound.	2024	2027	Multi Agency	New	$50
61	SR 237 Westbound to Southbound SR 85 Connector Ramp Improvements (including SR 85 Auxiliary Lanes between El Camino Real and SR 237)	Construct a collector/distributor road in the westbound direction on SR 237 from the Central Expressway overcrossing to SR 85. Widen off-ramp from westbound SR 237 to Southbound SR 85 to two lanes. Add auxiliary lane in the southbound direction between SR 237 and the El Camino Real interchange on SR 85.	2030	2035	Multi Agency	New	$47
62	SR 237 Westbound/Eastbound Auxiliary Lanes (Coyote Creek to N. First St, and N. First St. to Zanker Rd.)	Construct a new GP lane and reconstruct existing auxiliary lane on WB from Coyote Creek to Zanker Rd.; Construct new GP and auxiliary on WB SR237 from Zanker Rd. to N. First St.; and construct new GP lane and auxiliary on EB SR237 from N. First St. to Zanker Rd.	2025	2030	Multi Agency	New	$76
63	SR 85/I-280/Homestead Rd. Interchange Improvements	Improve interchange on SR 85/I-280/Homestead Road. Complete streets elements will be included.	2030	2036	Multi Agency	New	$32
64	SR 87/Capitol Expressway/Narvaez Ave. Interchange Improvements	Improve interchange at SR 87 and Capitol / Narvaez. Complete streets elements will be included.	2030	2036	Multi Agency	New	$43
65	US 101/Ellis Street	Improve interchange at US 101/Ellis Street. Complete streets elements will be included.	2024	2026	Multi Agency	New	$25
66	US 101/SR 237	Improve interchange at US 101/SR 237. Complete streets elements will be included.	2030	2040	Multi Agency	New	$150
67	SR 237/Maude	Improve interchange at SR 237/Maude. Complete streets elements will be included.	2024	2026	Multi Agency	New	$20
68	SR 237/Java Drive	Improve interchange at SR 237/Java Drive. Complete streets elements will be included.	2024	2026	Multi Agency	New	$50
69	SR 237/Carribbean Drive/Lawrence Expressway	Improve interchange at SR 237/Carribbean Drive/Lawrence Expressway. Complete streets elements will be included.	2024	2026	Multi Agency	New	$70
70	SR 237 Mainline Improvements	Improve SR 237 mainline operations	2023	2030	Multi Agency	New	$20
71	US 101/Moffett Blvd. Interchange Improvements	Reconfigure interchange, improve traffic operations and relieve congestion. Complete streets elements will be included.	2030	2036	Multi Agency	New	$81
72	US 101/Montague Expwy. Interchange Improvements	Construct partial cloverleaf interchange at US 101 and Montague Expressway. Complete streets elements will be included.	2025	2030	Multi Agency	New	$64

CERTIFIED COPY

DocuSign Envelope ID: 90AC8FE1-74CB-4CEC-9FF9-36B2AE8FF6D8

#	Title	Description	Preliminary Start Date	Anticipated Opening Date	Sponsor	Plan Bay Area 2040 ID	Total Project Cost in Millions ($YOE)*
73	Soundwall Program	Soundwall Program for Highways not covered in Measure B	2021	2040	Multi Agency	New	$38
74	SR 85 Express Lanes: US 101 (South San Jose) to Mountain View	Project will convert existing HOV lane to express lane and add a second express lane between SR 87 and I-280 in both directions.	2021	2031	VTA	17-07-0074	$233
75	US 101 Express Lanes: San Mateo County line to Dunne Avenue in Morgan Hill	Convert HOV Lanes to express lane and add a second express lane in some segments.	2018	2035	VTA	17-07-0075	$524
76	I-880 Express Lanes: SR-237 to US-101	Convert existing HOV lane to an express lane in both directions between SR 237 and US 101.	2034	2036	VTA	17-07-0081	$60
77	SR-87 Express Lanes: US 101 to SR-85	Convert existing HOV lane to an express lane in both directions between I-880 and SR-85	2038	2040	VTA	17-07-0082	$61
78	I-680 Express Lanes: SR-237 to US-101	Convert existing general purpose lane to an express lane in both directions between SR-237 and US-101; including NB GP Conversion between SR 237 and Alameda Countyline.	2038	2040	VTA	17-07-0083	$72
79	I-280 Express Lanes: US-101 to Magdalena Avenue	Convert existing HOV lane to an express lane in both directions between US 101 and Magdalena Avenue. This includes GP lane conversion between US 101 and Leigh Avenue.	2034	2038	VTA	17-07-0084	$100
80	Santa Clara County Express Lanes - Environmental and Design Phase for Future Segments	This program includes environmental and design phases for future express lane segments in Santa Clara Count., including along I-880, the widening of US 101 between Dunne Avenue and 10th Street with conversion to Express Lane, and for Highway 17.	2033	2040	VTA	17-07-0085	$129
81	Envision Expressway (Tier 1 Expressway Plan) Major and Minor Projects	Various operational and capacity improvements to expressways in Santa Clara County comprising the Tier 1 investments from the Santa Clara County Expressway Plan. These projects include capacity improvements for Almaden Expressway, Capitol Expressway, Foothill Expressway, Lawrence Expressway, Montague Expressway, Oregon-Page Mill Expressway, San Tomas Expressway, Santa Teresa Boulevard. This project also includes the following ITS/Signal upgrades: Replace/upgrade/add fiber optic lines; upgrade equipment for new technologies; systemwide pedestrian sensors; enhance/replace bicycle and vehicle detection with new technologies on the County expressways	2017	2040	County	17-07-0074	$864
82	Lawrence Expwy .: Expand to Eight Lanes from Moorpark Ave . to South of Calvert Dr .	Convert HOV Lanes to express lane and add a second express lane in some segments.	2030	2036	County	New	$7
83	Hale/Santa Theresa Avenue Extension (Phase 2)	Second of Phase of Hale Avenue extension with improved roadway.	2030	2036	County	New	$9
84	Widen Montague Expressway between Trade Zone and I-680	Widen Montague Expwy to 8 lanes in both directions between Trade Zone and I-680.	2022	2025	County	New	$17
85	Additional Local Road Preservation/Rehab	This project provides additional funding to local streets and roads preservation and rehabilitation beyond what is included in the regional local roads maintenance project	2017	2040	VTA	17-07-0004	$1,500
86	Widen San Tomas Expressway to 8 Lanes from Stevens Creek Blvd to Campbell Ave	Widen San Tomas Expressway from 6 to 8 Lanes from Stevens Creek Blvd to Campbell Ave.	2030	2036	VTA	17-07-0087	$45
87	Widen Brokaw Bridge over Coyote Creek	Widen north side of the bridge to add on additional through traffic lane on westbound Brokaw Road.	2030	2040	VTA	17-07-0090	$29
88	Widen Oakland Road from 4-lanes to 6-lanes between U.S. 101 and Montague Expressway	Widens Oakland Rd. from 4 to 6 lanes between US 101 and Montague Expwy. Also provides median island landscaping and operational improvements in roadway corridor.	2017	2027	San Jose	17-07-0091	$25
89	East Whisman across barrier connection between Ravendale and Ferguson (under SR 237)	Design and construction of new across barrier connection between Ravendale and Ferguson, under SR 237 as identified in the Draft East Whisman Precise Plan	2025	2027	Mtn View	New	$20
90	10th Street Bridge Widening	Widen existing 76' overcrossing at US101 and 10th Street and approach roadways between Chestnut Street and Camino Aroyo . The widened overcrossing will consist of 6-lane structure with 6' shouldrs/ bicycle lanes, and 8' sidewalks. Modify existing loop cloverleaf ramp on southbound and northbound US 101. This will help the traffic congestion and it is an important emergency access route.	2022	2025	Gilroy	New	$22
91	Chynoweth Ave/Thornwood Dr Extension (Almaden Expwy to Winfield Blvd)	Plan and construct a grade separation project.	2030	2040	San Jose	New	$21
92	King Rd Expansion over Penitencia Creek	Eliminate roadway bottleneck along King Road and replace bridge to accommodate flood control and bike/ped trail facilities along Penitencia Creek and bike/ped access route to the planned Berryessa BART station.	2030	2040	San Jose	New	$10
93	Quarry Road Extension to Caltrain Station	Bicycle, pedestrian, and transit connection between El Camino Real and Quarry Road and the Palo Alto Transit Center	2021	2025	Palo Alto	New	$4
94	Mary Avenue Extension over US 101	Extend Mary Avenue over US 101 and SR 237 to extend roadway to Moffett Business Park	2021	2026	Sunnyvale	New	$90
95	Caltrain Grade Separations	Measure B Caltrain Grade Separations	2017	2040	Multi Agency	17-07-0002	$900
96	SR 85 Corridor Improvements - Measure B	This program will fund corridor transit studies that improve transit connectivity and reduce traffic congestion in this corridor. It also includes a reserve amount for future projects along SR 85 that would be funded with Measure B sales tax	2017	2040	Multi Agency	17-07-0058	$350
					Totals		$22,735

*Projects escalated to Year of Expenditure (YOE)

CERTIFIED COPY

DocuSign Envelope ID: 90AC8FE1-74CB-4CEC-9FF9-36B2AE8FF6D8

ATTACHMENT B

VTA 2016 MEASURE B HIGHWAY PROGRAM
US 101 Improvements in the cities of Palo Alto and Mountain View to address regional connectivity and circulation between San Antonio Road and Charleston Road at the US 101/San Antonio Road, US 101/Rengstorff/Charleston Road and US 101/Shoreline Boulevard interchanges.
SR 85/SR 237 Area Improvements in Mountain View to address mainline congestion and regional connectivity through the SR 85/SR 237 connector, SR 85/El Camino Real interchange, and the SR 237/El Camino/Grant Road interchange.
SR 237/US 101/Mathilda Avenue Area Improvements in Sunnyvale to address local roadway congestion.
SR 237 Corridor Improvements in the cities of San Jose, Santa Clara and Milpitas to address mainline congestion and regional connectivity by addition of a SR 237 westbound lane between McCarthy Boulevard and North First Street, improvements at the SR 237/Great America Parkway westbound off-ramp, and replacement/widening of the Calaveras Boulevard structures over the UPRR tracks.
West County Improvements along I-280 in Cupertino, Los Altos, Los Altos Hills and Sunnyvale to address mainline congestion with mainline and interchange improvements from Magdalena Avenue to the San Mateo County line.
SR 85/I-280 Area Improvements in Cupertino, Los Altos, and Sunnyvale to address regional connectivity through a northbound I-280 braided ramp between SR 85 and Foothill Boulevard and improvements at the northbound I-280 off-ramp to Foothill Boulevard.
US 101/Trimble Road/De La Cruz Boulevard to Zanker Road Area Improvements to address local roadway connectivity and mainline congestion in San Jose and Santa Clara with US 101/Trimble Road/De La Cruz Boulevard interchange improvements, southbound US 101/SB 87 connector improvements, and a new US 101/Zanker Road interchange.
US 101/Old Oakland Road Improvements in San Jose to address local roadway congestion, access, and connectivity.
A new interchange on US 10/Mabury Road in San Jose to address regional access.
I-680 Corridor Improvements in San Jose to address mainline congestion and regional connectivity by improving the I-680/Alum Rock Avenue and I-680/McKee Road interchanges.
I-280/Lawrence Expressway/Stevens Creek Boulevard Interchange Improvements to address mainline and local roadway congestion.
I-280/Saratoga Avenue Interchange Improvements to address local circulation and mainline congestion.

CERTIFIED COPY

DocuSign Envelope ID: 90AC8FE1-74CB-4CEC-9FF9-36B2AE8FF6D8

I-280/Winchester Boulevard Area Improvements in Santa Clara and San Jose to address regional connectivity and local circulation.
SR 87 Corridor Technology-based Improvements in San Jose to address mainline congestion and system reliability through the implementation of technology-based operational improvements to the freeway.
Highway 17 Corridor Congestion Relief: Upgrade Highway 17/9 interchange to improve pedestrian and bicycle safety, mobility, and roadway operations; deploy advanced transportation technology to reduce freeway cut thru traffic in Los Gatos, including traffic signal control system upgrades in Los Gatos, Traveler Information Systems advanced ramp metering systems; support Multi-Modal Congestion Relief Solutions, including enhanced Highway 17 Express Bus service, implementing local bus system improvements that reduce auto trips to schools, work and commercial areas in Los Gatos; and develop park and ride lots to serve as transit hubs for express bus, shuttles, local bus system connections.
SR 17 Southbound/Hamilton Avenue Off-ramp Widening Improvements in Campbell to address mainline congestion and local circulation.
SR 17/San Tomas Expressway Improvements in Campbell to address mainline congestion and local circulation.
US 101/Blossom Hill Boulevard improvements in San Jose to address local roadway congestion and connectivity including for bicyclists and pedestrians.
US 101 Improvements in Gilroy to address mainline congestion and regional connectivity with a new US 101/Buena Vista Avenue interchange and US 101/SR 152 10th Street ramp and intersection improvements.
SR 152 Corridor Improvements in Gilroy including US 101/SR 25 interchange improvements to address regional connectivity and goods movement network improvements.
I-280/Wolfe Road Interchange Improvements in Cupertino to address mainline congestion and improve local traffic circulation.
I-880/Charcot Avenue Overcrossing in San Jose to address local relief circulation and adjacent I-880 interchanges congestion relief.
Noise Abatement Projects in Santa Clara County to implement treatments to address existing freeway noise levels throughout the county.
Intelligent Transportation Systems (ITS) Projects in Santa Clara County such as integrated corridor management systems, traffic operations systems, ramp metering, managed lanes, and local traffic signal control systems to address freeway mainline congestion and local roadway congestion caused by cut-through traffic.

CERTIFIED COPY

AMENDMENT No. 1 TO
FUNDING AGREEMENT
BETWEEN THE CITY OF MILPITAS AND
SANTA CLARA VALLEY TRANSPORTATION AUTHORITY
FOR THE STATE ROUTE 237
CALAVERAS BOULEVARD IMPROVEMENTS PROJECT

This FUNDING AGREEMENT AMENDMENT No.1 ("**First Amendment**") dated _____, 2025 for purposes of reference, is made and entered into by and between CITY OF MILPITAS, a municipal corporation of the State of California ("**CITY**") and SANTA CLARA VALLEY TRANSPORTATION AUTHORITY, a public agency organized as a special district under California law ("**VTA**"). Hereinafter, CITY and VTA may be individually referred to as "PART" or collectively referred to as "**Parties.**"

I. RECITALS

A. On January 28, 2022, Parties entered into an agreement ("**FUNDING AGREEMENT**") setting forth their respective obligations in regard to the Project Approval and Environmental Document (PA&ED) phase of the Calaveras Boulevard Improvements Project ("**PROJECT"**).

B. The PROJECT is scheduled to be completed by June 30, 2026.

C. The Parties wish to amend the FUNDING AGREEMENT to extend the term from December 31, 2024 to June 30, 2026.

NOW, THEREFORE, the Parties agree to amend the FUNDING AGREEMENT as follows:

II. AMENDED AGREEMENT

1. SECTION II PARAGRAPH 9. Term of Agreement is hereby amended to extend the agreement to June 30, 2026. The first sentence shall be restated as follows:

> This Agreement shall become effective upon full execution and shall remain effect through the earlier of (i) June 30, 2026, or (ii) completion of the PA&ED phase of the Project.

SECTION II PARAGRAPH 14 Notice is hereby amended to update VTA's address and shall be restated as follows:

> Any notice required to be given by either Party, or which either party may wish

to give, shall be in writing and served either by personal delivery or sent by certified or registered mail, postage prepaid, addressed as follows:

To VTA: Santa Clara Valley Transportation Authority
Chief Engineering & Program Delivery Officer
3331 North First Street, Bldg. A
San Jose, CA 95134-1906

To CITY: City of Milpitas
Michael Silveira,
City Engineer
455 E. Calaveras Blvd.
Milpitas, CA 95035
msilveira@milpitas.gov

Notice shall be deemed effective on the date personally delivered or, if mailed, three (3) days after deposit in the United States mail."

2. Any exhibits or attachments referenced in and/or attached to this First Amendment are incorporated into the Contract by this reference.

3. The capitalized terms used in this First Amendment have the meanings as defined in the Contract unless specifically defined in this First Amendment.

4. Except as modified by this First Amendment, all provisions of the Contract, including any exhibits and subsequent amendments to them, remain in full force and effect. All references to the Contract in this First Amendment refer to the Contract as amended unless otherwise specifically set forth or otherwise indicated by context.

5. In the event of any conflict between the provisions of this First Amendment and the provisions of the Contract, the provisions of this First Amendment will prevail. Whether or not specifically amended by this First Amendment, all of the terms and provisions of the Contract are deemed amended to the extent necessary to give effect to the purpose and intent of this First Amendment.

6. If any provision of the Contract, as amended by this First Amendment, is held by a court of competent jurisdiction to be invalid, void, or unenforceable, the remaining provisions will continue in full force without being impaired or invalidated in any way.

7. This First Amendment may be executed in one or more counterparts, each of which will be deemed an original but all of which will constitute one and the same instrument. For purposes of this Contract, an electronic copy of a signed

contract, or an electronically signed contract, has the same force and legal effect as a contract executed with an original ink signature. The term “electronic copy of a signed contract” refers to a writing as set forth in Evidence Code Section 1550. The term “electronically signed contract” means a contract that is executed by applying an electronic signature using technology approved by each of the Parties.

The Parties have caused their undersigned, duly authorized signatories to sign this First Amendment on the dates set forth below.

“CITY”
City of Milpitas
a municipal corporation

Approved By:

By:_____
Ned Thomas, City Manager

Date: _____

Approved As To Form:

By:_____
Christopher Creech, Acting City Attorney

Approved As To Scope:

By:_____
Luz Cofresi-Howe
Finance Director / Risk Manager

Approved As To Content:

By:_____
Christian Di Renzo, Public Works Director

“VTA”
Santa Clara Valley Transportation Authority
a public agency

By:_____
Carolyn M. Gonot
General Manager/CEO

Date: _____

Approved As To Form:

By:_____
Andrew Lee
Assistant Counsel

CITY OF MILPITAS
AGENDA REPORT
(AR)

Item Title:	**Adopt a Resolution to Approve Project Plans and Specifications, and Award Construction Contract to GSW Construction, Inc. for the McCandless Well Facility, Project No. 7076 (Staff Contact: Christian Di Renzo, Public Works Director, 408-586-2602)**
Category:	Consent Calendar-Community Services and Sustainable Infrastructure
Meeting Date:	4/15/2025
Recommendation:	(1) Adopt a resolution to approve the Project plans and specifications, (2) Award the construction contract to GSW Construction, Inc. in the total amount of $5,336,500, (3) Authorize the City Manager to execute the construction contract with GSW Construction, Inc.; and (4) Authorize the Public Works Director to negotiate and execute contract change order(s) in an aggregate amount not to exceed $800,000 for the McCandless Well Facility, Project No. 7076.

BACKGROUND:

The McCandless Well Facility, CIP Project No. 7076 (Project), is in the Adopted FY 2025-29 Capital Improvement Program (CIP). The Project provides for the design and construction of a potable water well at Delano Manongs Park. The Project site, approximately 10,000 square feet, is situated at the southwest corner of the park and will serve the City's Midtown and Metro Specific Plan areas. The Project is planned to be completed in three phases where the first phase was completed in 2019 for the test well and the second phase completed the installation of the permanent 600-foot deep well casing in the Fall of 2020. The final phase is to construct the above-ground well facility that includes the pump building, treatment facility, holding tank, associated components required for full system operation and site improvements.

Under California Code Regulations, Title 22 § Section 64558 (Title 22), the State Division of Drinking Water (DDW) requires jurisdictions to conduct a source capacity planning study to ensure there is sufficient water supply for anticipated community growth over a projected period of at least ten years. In 2015, DDW requested a formal evaluation of the City water source capacity based on the projected growth of the City's Midtown Specific Plan and Transit Area Specific Plan.

On June 15, 2021, the City Council adopted the 2020 Urban Water Management Plan (UWMP), which assesses the City's water supply needs for the update to the specific plans, currently known as Milpitas Gateway-Main Street Specific Plan and Milpitas Metro Specific Plans. Per the Adopted 2021 Water Master Plan, the specific plans are projected to build approximately 11,650 residential units and 3.5 million in non-residential building square footage for an estimated water demand of 3.3 million gallons per day. To meet this demand, the UWMP identified a combination of groundwater supply and above-grade storage tanks as the most effective strategy. Utilizing groundwater wells and blending of the water supply from the City's two wholesalers (San Francisco Public Utility Commission and Valley Water) will help minimize the required storage capacity from six to two million gallons for the Valley Water pressure zone. Additionally, expanding the City water portfolio to include groundwater wells will supplement the loss of supply due to cutbacks from the wholesalers, in the event of prolonged droughts, or natural disasters that may damage conveyance infrastructure. The City has three wells located in, or planned for, the southwestern part of the City: Pinewood Well is fully developed as an emergency well, McCandless Well will be in operation by 2027, and Curtis Well is anticipated to be in operation by or around 2035.

ANALYSIS:

The Project was advertised on the City eProcurement system, OpenGov Procurement, and digital construction trade publications on February 7, 2025, and in the Milpitas Post on February 7 and 14, 2025, in accordance

with the bidding requirements of the Uniform Public Construction Cost Accounting Act. The Project was also posted at Milpitas City Hall, Sports Center, and Senior Center per City Council direction and Government Code section 36933. The bid opening was held on March 11, 2025, and three (3) sealed bids were received with the price range from $5,336,500 to $ 6,186,000. The lowest, responsive, responsible bidder is GSW Construction, Inc., submitting a bid in the amount of $5,336,500. The Project Plan and Specifications (**Attachment 2**); and the Engineer's Construction Estimate for the Project's base bid is $5,118,000 and the Summary of Bid Results is as follows while detailed information about the bid results (**Attachment 3)** are included in the agenda packet.

Bidder	Location	Base Bid
Engineer's Construction Estimate	-	$5,118,000
GSW Construction, Inc.	San Francisco, CA	$5,336,500
TSI Engineering, Inc.	North Highlands, CA	$5,690,786
Pacific Infrastructure	Pleasanton, CA	$6,186,000

The bid prices submitted range from 4% to 21% over the Engineer's Construction Estimate. The wide variation is likely due to the current construction market which has been affected by inflation and bidders' ability to self-perform work rather than hire subcontractor(s), workload schedules, overhead costs and profit margin thresholds, and material and labor markups.

Staff reviewed the bid proposal submitted by GSW Construction, Inc., the apparent lowest bidder, and found their bid proposal to be responsive. Staff recommends awarding a construction contract in the amount of $5,336,500 to GSW Construction, Inc., the lowest responsible bidder submitting a responsive bid. No bid protests were filed with the City. There is sufficient funding available in the Project budget to award this contract and no additional funding appropriation is required.

The construction contingency established for the Project to address any unforeseen conditions that arise during construction is $800,000 which is 15% of the total contract value. As previously approved for the successful completion of recent projects with tight completion schedules, staff is requesting the use of the same change order policy used for previous projects (**Attachment 4**). This policy allows for a timely completion of the Project, while addressing the need to respond swiftly to construction conditions and approve necessary change orders to limit potential claims or risks to the City. The change order authority will not be exceeded without prior City Council Approval.

POLICY ALTERNATIVE(S):
Alternative 1: Deny approval of the Project's plans and specifications and not award the construction contract to GSW Construction, Inc.

Pros: None.

Cons: Not approving the plans and specifications and awarding the construction contract to the low bidder for the Project will prevent the City from completing the installation of the new well facility which could result in a water supply deficiency for anticipated growth within the Midtown and Metro Specific Plan areas.

Reason not Recommended: Under Title 22, State law requires the City to maintain an adequate water supply for peak usage, droughts, and emergencies. Blending the water supply from the water wholesalers is the most effective strategy for the City. Without McCandless Well, the above-grade water reservoir storage requirement within the Valley Water pressure zone would have to increase significantly (as would the needed footprint) and additional measures would be required to avoid running out of wholesale treated water in the event of an emergency or prolonged drought.

FISCAL IMPACT:
Adequate funds are available in the Project budget and no additional funding appropriation is required. The Project is funded by several funding sources including TASP Impact Fees, a Water Bond, the Water Capital Surcharge Fund, and the Water Line Extension Fund.

As of March 5, 2025, the uncommitted balance of the Project is as follows:

CIP 7076	$ 8,615,426

Summary of Estimated Construction Cost:

Construction Contract	$ 5,336,500
15% Construction Contingency	$ 800,000
Total	**$ 6,136,500**

CALIFORNIA ENVIRONMENTAL QUALITY ACT (CEQA):

On February 4, 2020, the City Council adopted an addendum to the June 3, 2008, TASP Environmental Impact Report (EIR) pursuant to CEQA Guidelines Section 15164 to address minor changes and additions. The addendum determined the environmental impacts from the implementation of the Project would not result in substantial changes requiring major revisions to the previous EIR, as outlined in CEQA Guidelines Section 15162.

RECOMMENDATION:

(1) Adopt a resolution to approve the Project plans and specifications.
(2) Award the construction contract to GSW Construction, Inc. in the total amount of $5,336,500.
(3) Authorize the City Manager to execute the construction contract with GSW Construction, Inc.
(4) Authorize the Public Works Director to negotiate and execute contract change order(s) in an aggregate amount not to exceed $800,000 for the McCandless Well Facility, Project No. 7076.

ATTACHMENT(S):

(1) Resolution
(2) Plan and Specification
(3) Bid Summary
(4) Change Order Policy

Attachment 1

RESOLUTION NO. _____

A RESOLUTION OF THE CITY COUNCIL OF THE CITY OF MILPITAS APPROVING PROJECT PLANS & SPECIFICATIONS; AWARD THE CONSTRUCTION CONTRACT TO THE LOWEST RESPONSIBLE BIDDER SUBMITTING A RESPONSIVE BID, GSW CONSTRUCTION, INC., IN A TOTAL AMOUNT OF $5,336,500; AUTHORIZE THE CITY MANAGER TO EXECUTE THE CONSTRUCTION CONTRACT WITH GSW CONSTRUCTION, INC., AND AUTHORIZE THE PUBLIC WORKS DIRECTOR TO NEGOTIATE AND EXECUTE CONTRACT CHANGE ORDER(S) IN AN AGGREGATE AMOUNT NOT TO EXCEED $800,000 FOR THE MCCANDLESS WELL FACILITY, PROJECT NO. 7076.

WHEREAS, the McCandless Well Facility Project, City Project No. 7076 ("Project"), is in the approved 2025-29 Capital Improvement Program and provides for the design and construction of a potable water well at Delano Manongs Park; and

WHEREAS, the Project is to construct the above-ground well facility for the ground well including the pump building, treatment facility, holding tank, associated components required for full system operation, and site improvements; and

WHEREAS, the Project was advertised on City's eProcurement system, OpenGov Procurement, and digital construction trade publications on February 7, 2025, and in the Milpitas Post on February 7 and 14, 2025, in accordance with the bidding requirements of the Uniform Public Construction Cost Accounting Act and posted at Milpitas City Hall, Sports Center, and Senior Center as per City Council direction and Government Code section 36933; and

WHEREAS, the Engineer's Estimate for the Project base bid items is $5,118,000; and

WHEREAS, on March 11, 2025, three (3) sealed bid proposals were received and the bid pricing ranged from $5,336,500 to $6,186,00; and

WHEREAS, no bid protest was filed with the City within five (5) calendar days of the bid opening as set forth in the Project specifications; and

WHEREAS, the lowest responsible bidder submitting a responsive bid is GSW Construction, Inc., in the base bid amount of $5,336,500; and

WHEREAS, staff recommends the City Council award a construction contract to GSW Construction, Inc., the lowest responsible bidder submitting a responsive bid for the Project, and authorize the City Manager to execute a construction contract for bid in the amount of $5,336,500 in accordance with State law; and

WHEREAS, staff recommends the City Council authorize the Public Works Director to negotiate and execute change order(s) in an amount not to exceed $800,000; approximately fifteen percent (15%) of the total contract value, due to the Project's tight completion schedule and staff's capability to respond swiftly to unanticipated construction conditions to limit potential claims or risk to the City; and

WHEREAS, sufficient funds are available in the Project budget to award the contract to GSW Construction, Inc., in total amounts of $5,336,500; and

WHEREAS, staff recommends the City Council approve the Project plans and specifications.

NOW, THEREFORE, the City Council of the City of Milpitas hereby finds, determines, and resolves as follows:

1. The City Council has considered the full record before it, which may include but is not limited to such things as the staff report, testimony by staff and the public, and other materials and evidence submitted or provided to it. Furthermore, the recitals set forth above are found to be true and correct and are incorporated herein by reference.

2. The City Council hereby approves the Project Plans and Specifications.

3. The City Council hereby awards the construction contract to and authorizes the City Manager to execute the contract and related documents with the lowest responsible bidder submitting a responsive bid, GSW Construction, Inc., in the amount of $5,336,500 for the Project.

4. The Public Works Director is hereby authorized to negotiate and execute contract change order(s) in an aggregate amount not to exceed $800,000 for the Project.

PASSED AND ADOPTED this _____ day of _____, 2025, by the following vote:

AYES:

NOES:

ABSENT:

ABSTAIN:

ATTEST:

_____
Suzanne Guzzetta , City Clerk

APPROVED:

_____
Carmen Montano, Mayor

APPROVED AS TO FORM:

_____
Christopher Creech, Acting City Attorney

CONDITIONS OF APPROVAL

1. A CERTIFIED GREEN BUILDING PROFESSIONAL SHALL PROVIDE PROGRESS INSPECTION REPORTS TO THE CITY INSPECTOR DURING CONSTRUCTION. PRIOR TO FINAL INSPECTION, THE CERTIFIED GREEN BUILDING PROFESSIONAL SHALL PROVIDE A LETTER OF COMPLIANCE TO THE CITY INSPECTOR THAT CERTIFIES THE PROJECT HAS BEEN CONSTRUCTED IN ACCORDANCE WITH THE REQUIREMENTS ON THE CALGREEN CHECKLISTS ON PLAN.

ATTACHMENT 2

CITY OF MILPITAS
SANTA CLARA COUNTY, CALIFORNIA

McCANDLESS WELL FACILITY
PROJECT NO. 7076
FEBRUARY 2025
BID SUBMITTAL

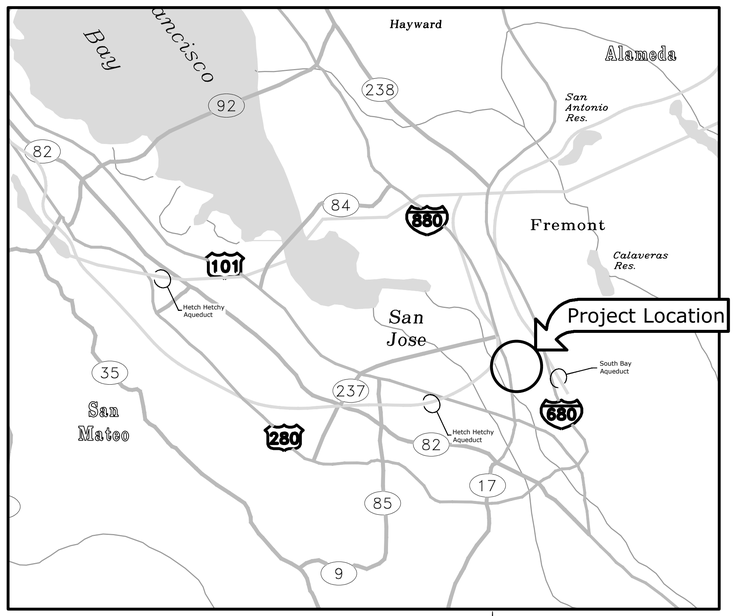

VICINITY MAP
NOT TO SCALE

N

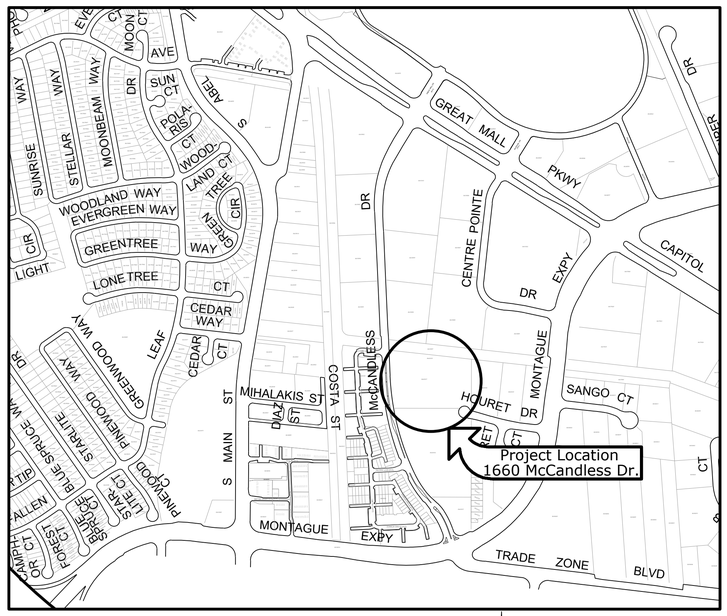

LOCATION MAP
NOT TO SCALE

N

GENERAL NOTES:

1. THE CONTRACTOR SHALL POSSESS CLASS A – GENERAL ENGINEERING CONSTRUCTION LICENSE
2. WORK UNDER THIS CONTRACT SHALL AT A MINIMUM CONFORM TO THE FOLLOWING CODES
   - 2022 CALIFORNIA BUILDING CODE (CBC)
   - 2022 CALIFORNIA MECHANICAL CODE (CMC)
   - 2022 CALIFORNIA PLUMBING CODE (CPC)
   - 2022 CALIFORNIA ELECTRIC CODE (CEC)
   - 2022 CALIFORNIA ENERGY CODE (CEnC)
   - 2022 CALIFORNIA GREEN BUILDING CODE (CGBC)
   - 2022 CALIFORNIA FIRE CODE (CFC)
   - 2023 MILPITAS MUNICIPAL CODE (MMC)
3. BUILDING CODE ANALYSIS:
   - CONSTRUCTION TYPE: VB
   - OCCUPANCY GROUP: F-1
   - SPRINKLER SYSTEM: NOT REQUIRED
   - BUILDING AREA: 953 SQ FT (SINGLE STORY)
   - OVERALL SITE AREA: 10,000 SQ FT

INDEX OF DRAWINGS

SHEET	DRAWING	DESCRIPTION
1	G01	COVER, DRAWING INDEX, AND LOCATION MAPS
2	G02	GENERAL NOTES, SYMBOLS, AND ABBREVIATIONS
3	G03	BLUEPRINT FOR A CLEAN BAY
4	G04	2023 CALGREEN MANDATORY MEASURES CHECKLIST (NON-RESIDENTIAL)
5	G05	PROCESS FLOW SCHEMATIC, HYDRAULIC PROFILE, AND DESIGN CRITERIA
6	C01	EXISTING CONDITIONS & DEMOLITION PLAN
7	C02	SITE WORK AND GRADING PLAN
8	C03	SITE PIPING PLAN
9	C04	CIVIL DETAILS 1
10	C05	CIVIL DETAILS 2
11	C06	CIVIL DETAILS 3
12	C07	CIVIL DETAILS 4
13	CP-1	YARD PIPING CATHODIC PROTECTION PLAN & NOTES
14	CP-2	BACKWASH TANK CATHODIC PROTECTION PLAN & SECTION
15	CP-3	STORAGE TANK CATHODIC PROTECTION SCHEMATIC & DETAILS 1
16	CP-4	STORAGE TANK CATHODIC PROTECTION DETAILS 2
17	CP-5	STORAGE TANK CATHODIC PROTECTION DETAILS 3
18	CP-6	YARD PIPING CATHODIC PROTECTION DETAILS 1
19	CP-7	YARD PIPING CATHODIC PROTECTION DETAILS 2
20	A01	CHEMICAL BUILDING ELEVATIONS
21	A02	CHEMICAL BUILDING FLOOR PLAN
22	A03	ARCHITECTURAL DETAILS & SCHEDULES
23	M01	CHEMICAL FEED BUILDING PLAN AND SECTIONS
24	M02	FILTER VESSEL PLAN & SECTIONS
25	M03	BACKWASH STORAGE TANK PLAN AND SECTIONS
26	M04	BACKWASH STORAGE TANK DETAILS
27	M05	CHEMICAL FEED SYSTEM PLANS AND DETAILS
28	M06	MECHANICAL DETAILS 1
29	M07	MECHANICAL DETAILS 2
30	M08	WELL HEAD PLAN AND SECTIONS
31	M09	WELL HEAD DETAILS
32	M10	ENERGY COMPLIANCE FORMS – MECHANICAL SYSTEMS
33	S01	GENERAL STRUCTURAL NOTES & SPECIFICATIONS
34	S02	STATEMENT OF SPECIAL INSPECTIONS
35	S03	TYPICAL STRUCTURAL DETAILS
36	S04	CHEMICAL BUILDING FOUNDATION PLAN
37	S05	CHEMICAL BUILDING ROOF FRAMING PLAN
38	S06	CHEMICAL BUILDING SECTIONS
39	S07	FOUNDATION SECTIONS & DETAILS
40	S08	ROOF FRAMING SECTION & DETAILS
41	S09	BACKWASH STORAGE TANK PLAN, SECTIONS & DETAILS
42	S10	FILTER VESSEL FOUNDATION PLAN, SECTIONS & DETAILS
43	E01	ELECTRICAL SYMBOLS & ABBREVIATIONS
44	E02	ATS & MSBB ONE LINE DIAGRAM
45	E03	ATS & MSBB ELEVATION
46	E04	CONTROL PANEL ELEVATION & BACKPAN LAYOUT
47	E05	CONTROL PANEL ELEMENTARY DIAGRAMS
48	E06	VFD ELEMENTARY DIAGRAM
49	E07	FULL SPEED ELEMENTARY DIAGRAM
50	E10	EXAMPLE INTERCONNECTION DIAGRAM
51	E11	TYPICAL ELECTRICAL DETAILS NO. 1
52	E12	TYPICAL ELECTRICAL DETAILS NO. 2
53	E13	TYPICAL ELECTRICAL DETAILS NO. 3
54	E14	TYPICAL ELECTRICAL DETAILS NO. 4
55	E20	LIGHTING FIXTURE SCHEDULE, GENERAL NOTES & CONDUIT SCHEDULE
56	E21	ELECTRICAL OVERALL SITE PLAN
57	E22	FILTER AREA ELECTRICAL PLAN
58	E23	RESTROOM ELECTRICAL ROOM POWER PLAN
59	E30A	CHEMICAL FEED BUILDING ELECTRICAL REFLECTIVE PLAN
60	E30B	CHEMICAL FEED BUILDING ELECTRICAL BASE PLAN
61	E30C	CHEMICAL FEED BUILDING ELECTRICAL POWER PLAN
62	ET41	TITLE 24 ENERGY INDOOR LIGHTING
63	ET42	TITLE 24 ENERGY OUTDOOR LIGHTING
64	I01	INSTRUMENTATION SYMBOLS & ABBREVIATIONS
65	I02	WELL & AUXILIARY SYSTEM P&ID
66	I03	FILTER CELL P&ID
67	I04	SURFACE WASH PUMPS, BACKWASH WASTE & AIR COMPRESSOR SYSTEM P&ID
68	I05	SODIUM HYPOCHLORITE SYSTEM P&ID
69	I06	FERRIC CHLORIDE SYSTEM P&ID
70	I07	AMMONIUM SULFATE SYSTEM P&ID

DEFERRED SUBMITTALS:

THE FOLLOWING ITEMS SHALL BE SUBMITTED FOR REVIEW:

1. PREFABRICATED METAL ROOF AND TRUSS DRAWINGS AND CALCULATIONS
2. BACKWASH TANK SHOP DRAWINGS
3. BACKWASH STORAGE TANK ANCHORAGE
4. BACKWASH STORAGE TANK FOUNDATION
5. FILTER VESSEL SHOP DRAWINGS
6. EQUIPMENT ANCHORAGE DRAWINGS AND CALCULATIONS FOR PUMPS, FILTER VESSEL, ELECTRICAL/CONTROL EQUIPMENT, TANKS AND AIR COMPRESSOR.
7. FRP GRATING INSIDE BUILDING
8. A/C UNITS, EXHAUST FAN, INTAKE LOUVER

DEFERRED SUBMITTAL ITEMS LISTED ARE DEPICTED IN THE CONTRACT DOCUMENTS TO SHOW DESIGN INTENT AND RELATIONSHIP WITH OTHER BUILDING COMPONENTS AND SYSTEMS. DEFERRED SUBMITTAL SHALL BE APPROVED PRIOR TO THE CONSTRUCTION OF ANY WORK IN THE DEFERRED SUBMITTAL ITEMS. DOCUMENTS FOR DEFERRED SUBMITTAL ITEMS SHALL BE SUBMITTED TO THE REGISTERED DESIGN PROFESSIONAL IN RESPONSIBLE CHARGE WHO SHALL REVIEW THEM AND FORWARD THEM TO THE BUILDING OFFICIAL WITH A NOTATION INDICATING THAT THE DEFERRED SUBMITTAL DOCUMENTS HAVE BEEN REVIEWED AND FOUND TO BE IN GENERAL CONFORMANCE TO THE DESIGN OF THE BUILDING. THE DEFERRED SUBMITTAL ITEMS SHALL NOT BE INSTALLED UNTIL THE DEFERRED SUBMITTAL DOCUMENTS HAVE BEEN APPROVED BY THE BUILDING OFFICIAL. IF THE CONTRACTOR PROPOSES DEVIATIONS FROM THE SHOWN DESIGN INTENT, THE CONTRACTOR IS RESPONSIBLE FOR ANY ADDITIONAL EFFORT, MATERIAL, AND DESIGN AT NO ADDITIONAL COST TO THE CITY.

BEFORE EXCAVATING
CALL U.S.A.
UNDERGROUND SERVICE ALERT
800-642-2444
TWO WORKING DAYS BEFORE ALL
PLANNED WORK OPERATIONS
PLANNED

811 Know what's below. Call before you dig.

WEST YOST
Water. Engineered.
6800 Koll Center Parkway
Suite 150
Pleasanton, CA 94566
(925) 426-2580
FAX (530) 756-5991

Designer Stamp:
REGISTERED PROFESSIONAL ENGINEER — JEFFREY WANG — No. C60930 — Exp. 12-31-26 — CIVIL — STATE OF CALIFORNIA
2/6/2025

Record Drawings

Designer: _____ Date: _____
Public Works Inspector: _____ Date: _____
Utility/Facility Dept. Head: _____ Date: _____
Project Engineer: _____ Date: _____
Public Improvements Initially Accepted by the City Council on: _____ Res. No. _____

Drawn By: ____ Date: _____
Checked By: ____ Date: _____
Designed By: ____ Date: _____

Revisions

Num.	Description	Engr. Aprv.	Date
1			

CITY OF MILPITAS
CALIFORNIA
INCORPORATED JANUARY 26, 1954

CITY OF MILPITAS
ENGINEERING DIVISION

McCANDLESS WELL FACILITY
PROJECT NO. 7076

COVER, DRAWING INDEX, AND LOCATION MAPS

RECOMMENDED FOR BIDDING BY: Lyhak Eam DATE: 2/7/2025
LYHAK EAM, P.E., Public Works Division Manager – Engineering

APPROVED FOR BIDDING BY: Michael Silveira DATE: 2/7/2025
MICHAEL SILVEIRA, P.E., City Engineer

DWG No. G01
PROJECT NO. 7076
Rec. Dwg No.
SCALE: AS SHOWN
SHEET 1 OF 70

N:\Clients\2705 City of Milpitas\30-23-27 McCandless WFL\CAD\Production\27030-23027-G01.dwg 2-06-25 10:16:29 AM stauffer

GENERAL NOTES:

1. ALL WORK AND MATERIALS SHALL COMPLY WITH STANDARD SPECIFICATIONS, CONSTRUCTION DETAILS, AND STANDARD DRAWINGS (LISTED ON THIS SHEET) OF THE CITY OF MILPITAS AVAILABLE IN THE CITY ENGINEER'S OFFICE. IT IS THE RESPONSIBILITY OF THE CONTRACTOR TO OBTAIN PERMITS NECESSARY TO PERFORM THE IMPROVEMENTS IN THESE PLANS FROM THE APPROPRIATE AGENCIES AND TO COMPLY WITH THE AGENCIES' REQUIREMENTS. THE CONTRACTOR MUST COMPLY WITH ALL APPLICABLE NATIONAL, STATE AND LOCAL LAWS.
2. THE OFFICIAL COPY OF THESE PLANS IS ON FILE IN THE OFFICE OF THE CITY ENGINEER IN MILPITAS.
3. ALL UTILITIES AND IMPROVEMENTS THAT BECOME DAMAGED DURING CONSTRUCTION SHALL BE COMPLETELY RESTORED TO THE SATISFACTION OF THE CITY ENGINEER AND UTILITY OWNER.
4. LAND AVAILABLE TO THE CONTRACTOR IS INDICATED ON THE DRAWINGS. ANY ADDITIONAL LAND REQUIRED FOR STAGING, STORAGE, ETC., SHALL BE ACQUIRED BY THE CONTRACTOR AT THE CONTRACTOR'S EXPENSE. PROVIDE TEMPORARY FENCING AND EROSION CONTROLS AT IDENTIFIED CONSTRUCTION EASEMENT LIMITS. MAINTAIN FENCING AND EROSION CONTROLS THROUGHOUT CONSTRUCTION IN ACCORDANCE WITH SPECIFICATIONS AND PERMITS. RESTORE DISTURBED AREAS TO ORIGINAL GRADE.
5. CONTRACTOR SHALL CONTROL DUST AT ALL TIMES DURING CONSTRUCTION AS REQUIRED BY THE CITY AND THE REGIONAL AIR QUALITY CONTROL BOARD.
6. ACTUAL FIELD CONDITIONS MAY VARY FROM THOSE SHOWN ON DRAWINGS. CONTRACTOR SHALL BE RESPONSIBLE FOR VERIFYING ACTUAL ABOVE-GROUND AND BELOW-GROUND CONDITIONS PRIOR TO START OF CONSTRUCTION.
7. A $2,000 DEPOSIT SHALL BE MADE TO THE CITY OF MILPITAS AND A CONSTRUCTION WATER METER SHALL BE OBTAINED FOR INCIDENTAL WATER USED DURING CONSTRUCTION, INCLUDING PIPELINE FLUSHING AND PRESSURE TESTING.
8. THE CONTRACTOR SHALL NOTIFY UNDERGROUND SERVICE ALERT (U.S.A.) AT (800) 642-2444 48 HOURS PRIOR TO ANY CONSTRUCTION ACTIVITIES AND OBTAIN A REFERENCE NUMBER.
9. PRIOR TO ANY CONSTRUCTION OR INSTALLATION OF PUBLIC FACILITIES, THE CITY'S CONSTRUCTION MANAGER SHALL ARRANGE A PRE-CONSTRUCTION CONFERENCE BETWEEN THE CONTRACTOR, CONSTRUCTION MANAGER, INSPECTOR, DESIGN ENGINEER, AND OTHER CITY REPRESENTATIVES. THIS MEETING SHALL TAKE PLACE A MINIMUM OF SEVEN (7) DAYS PRIOR TO THE SCHEDULED START OF WORK.
10. THE CONTRACTOR SHALL CALL THE CITY OF MILPITAS TO SCHEDULE INSPECTIONS A MINIMUM OF 48 HOURS PRIOR TO START OF CONSTRUCTION.
11. PRIOR TO ANY WORK, THE CONTRACTOR SHALL OBTAIN A CITY BUSINESS LICENSE.
12. THE CONTRACTOR IS RESPONSIBLE FOR THE PRESERVATION AND/OR PERPETUATION OF ALL EXISTING MONUMENTS AND STAKES WITHIN THE CONTRACTOR'S AREA OF WORK. THE CONTRACTOR SHALL NOT DISTURB OR REMOVE ANY MONUMENTS OR STAKES WITHOUT THE PERMISSION OF THE CITY ENGINEER, AND HE SHALL BEAR THE EXPENSE OF RESETTING ANY MONUMENTS OR STAKES WHICH MAY BE DISTURBED OR REMOVED WITH OR WITHOUT PERMISSION. THE CONTRACTOR SHALL PROVIDE A MINIMUM OF 15 WORKING DAYS NOTICE TO THE CITY ENGINEER PRIOR TO DISTURBANCE OR REMOVAL OF EXISTING MONUMENTS OR STAKES. THE CONTRACTOR SHALL UTILIZE THE SERVICES OF A CALIFORNIA LICENSED LAND SURVEYOR TO RESET ALL DISTURBED OR REMOVED MONUMENTS AND STAKES OR PROVIDE WITNESS MONUMENTS, AND FILE THE REQUIRED DOCUMENTATION WITH THE COUNTY SURVEYOR PURSUANT TO THE BUSINESS AND PROFESSIONS CODE SECTION 8771.
13. WHEN IT IS FOUND THAT FIELD CONDITIONS ARE NOT AS SHOWN ON THE PLANS, CONTRACTOR SHALL ALERT THE CONSTRUCTION MANAGER. THE CONSTRUCTION MANAGER MAY REQUEST THE DESIGN ENGINEER TO MAKE REVISIONS AND/OR ADJUSTMENTS TO THE PLANS PRIOR TO FURTHER CONSTRUCTION.
14. CONTRACTOR SHALL COORDINATE WITH PACIFIC GAS AND ELECTRIC COMPANY FOR THE DESIGN AND INSTALLATION OF ALL GAS AND ELECTRIC FACILITIES.
15. CONSTRUCTION SHALL NOT BEGIN UNTIL 7 AM AND SHALL END BY 7 PM, WEEKDAYS, EXCEPT HOLIDAYS.
16. A NATIONAL POLLUTION DISCHARGE ELIMINATION SYSTEM PERMIT (NPDES CONSTRUCTION PERMIT) IS REQUIRED PRIOR TO COMMENCEMENT OF CONSTRUCTION ACTIVITY RELATED TO THIS SITE AND SHALL BE OBTAINED BY THE CITY. ANY DISCHARGE (DURING CONSTRUCTION) OF GROUNDWATER INTO THE DOWNSTREAM STORM SYSTEM MUST BE UNCONTAMINATED. THE CONTRACTOR SHALL MAKE THIS DETERMINATION PRIOR TO ANY DISCHARGE.
17. IF ARCHAEOLOGICAL MATERIALS ARE UNCOVERED DURING GRADING, TRENCHING OR OTHER EXCAVATION, EARTHWORK WITHIN 100' OF THIS AREA SHALL BE STOPPED UNTIL A PROFESSIONAL ARCHAEOLOGIST WHO IS CERTIFIED BY THE SOCIETY OF CALIFORNIA ARCHAEOLOGIST (SCA) OR THE SOCIETY OF PROFESSIONAL ARCHAEOLOGIST (SOPA) HAS HAD AN OPPORTUNITY TO EVALUATE THE SIGNIFICANCE OF THE FIND AND SUGGEST APPROPRIATE MITIGATION MEASURES, IF THEY ARE DEEMED NECESSARY.
18. RECORD DRAWINGS OF ORIGINAL PLANS, INCLUDING A COPY OF THE AUTOCAD FILES (DIGITAL FORMAT) SHALL BE FURNISHED TO THE CONSTRUCTION MANAGER WITHIN SIXTY (60) DAYS OF THE COMPLETION OF CONSTRUCTION AND PRIOR TO INITIAL ACCEPTANCE OF PUBLIC IMPROVEMENTS.
19. ALL GRADING SHALL COMPLY WITH CITY OF MILPITAS GRADING ORDINANCE, THIS PLAN, AND THE PRELIMINARY SOILS REPORT PREPARED BY RGH CONSULTANTS, DATED JUNE 4, 2019 AND ALL SUBSEQUENT ADDENDA.
20. THE FOLLOWING ENTITIES SHALL BE RESPONSIBLE FOR INSPECTION AND MAINTENANCE / OWNERSHIP OF THE LISTED FACILITIES AND COMPLETION CERTIFICATE BY DESIGN ENGINEER:

Facilities	Ownership	Inspection	Design Engineer
Water	City of Milpitas	Public Works	Not Required
Sewer	City of Milpitas	Public Works	Not Required
Storm	City of Milpitas	Public Works	Not Required
Street	City of Milpitas	Public Works	Not Required
Street Light	City of Milpitas	Public Works	Not Required

GENERAL NOTES (CONT):

SITE PAVING

1. UPON COMPLETION OF ROUGH GRADING, ACTUAL THICKNESS (STRUCTURAL SECTION) OF THE BASE MATERIAL AND AC PAVEMENT SHALL BE DETERMINED BASED ON THE RESULTS OF R-VALUES, SAND EQUIVALENTS LABORATORY TESTING. GEOTECHNICAL/SOIL ENGINEER SHALL RECOMMEND THE STRUCTURAL SECTIONS OF PAVEMENT TO THE CITY ENGINEER FOR REVIEW AND APPROVAL.
2. THE CONTRACTOR SHALL NOT ORDER OR PLACE ANY PORTLAND CEMENT CONCRETE OR ASPHALT CONCRETE PAVING UNTIL THE FORMS AND SUBGRADE AND/OR AGGREGATE BASE HAVE BEEN INSPECTED BY THE CITY PUBLIC WORKS INSPECTOR AND APPROVED BY THE ENGINEER IN CHARGE OF CONSTRUCTION.
3. EDGE OF EXISTING PAVEMENT SHALL BE TACK COATED PRIOR TO CONSTRUCTING NEW PAVEMENT.
4. MANHOLES, WATER VALVE BOXES, CLEAN OUT FRAMES AND COVERS SHALL BE BROUGHT TO FINISHED GRADE BY THE CONTRACTOR AFTER PAVING IS COMPLETED.
5. THE FINAL OR SURFACE LAYER OF ASPHALT CONCRETE SHALL NOT BE PLACED UNTIL ALL ON-SITE IMPROVEMENTS HAVE BEEN COMPLETED, INCLUDING ALL GRADING, AND UNTIL ALL UNACCEPTABLE CONCRETE WORK HAS BEEN REMOVED AND REPLACED, UNLESS OTHERWISE APPROVED BY THE CITY ENGINEER.

UNDERGROUND

1. THE LOCATION, DEPTH AND EXISTENCE OF UNDERGROUND IMPROVEMENTS ARE SHOWN IN THEIR APPROXIMATE POSITIONS BASED UPON INFORMATION AVAILABLE TO THE ENGINEER. THE CONTRACTOR SHALL EXCAVATE INSPECTION HOLES "POT HOLES" AND DETERMINE THE LOCATION AND DEPTH OF ALL UNDERGROUND STRUCTURES AND UTILITIES THAT ARE IN THE VICINITY OF AND/OR MAY BE AFFECTED BY THE PROPOSED IMPROVEMENT WORK PRIOR TO ANY CONSTRUCTION WORK WHICH COULD DAMAGE OR CONFLICT WITH SAID STRUCTURES AND/OR UTILITIES. NOTIFY ENGINEER OF EXISTING UTILITIES THAT ARE NOT SHOWN OR ARE IN LOCATIONS DIFFERENT THAN SHOWN ON THE PLANS.
2. ALL EXISTING WATER, SEWER, STORM DRAINAGE, AND ELECTRICAL WITHIN CONSTRUCTION AREA MAY NOT BE SHOWN. CONTRACTOR SHALL LOCATE ALL EXISTING UTILITIES IN WORK AREA PRIOR TO CONSTRUCTION. RELOCATION OF EXISTING UTILITIES SHALL BE COORDINATED WITH UTILITY PROVIDER.
3. WATER SERVICES AND MAINS ARE TO BE SEPARATED A MINIMUM OF 10' HORIZONTAL DISTANCE AND 1' VERTICAL DISTANCE FROM SEWER AND RECYCLED WATER LATERALS AND MAINS. POTABLE WATER LINES SHALL BE ABOVE ALL STORM DRAIN, SANITARY SEWER AND RECYCLED WATER LINES.
4. SEPARATION BETWEEN THE RECYCLED WATER LINES FROM OTHER UTILITIES; SUCH AS POTABLE WATER, FIRE PROTECTION AND SANITARY SEWER; SHALL BE IN ACCORDANCE WITH THE CITY OF MILPITAS "RECYCLED (NON-POTABLE) WATER GUIDELINES". CALL PUBLIC WORKS UTILITY ENGINEERING, (408) 586-3358, FOR A COPY.
5. CONNECTIONS TO EXISTING WATER MAINS SHALL BE APPROVED BY CITY ENGINEER. CONTRACTOR SHALL PERFORM ALL EXCAVATION, PREPARE SITE, FURNISH ALL MATERIALS, INSTALL TAPPING TEE, VALVE AND ALL THRUST BLOCKS, BACKFILL, RESTORE SURFACE, AND CLEAN UP. NON-METALLIC WATER LINES SHALL BE INSTALLED WITH A TRACER WIRE PER CITY STANDARD DRAWING NO. 752.
6. ALL WATER VALVES SHALL BE CLUSTERED, UNLESS OTHERWISE DIRECTED BY THE CITY ENGINEER.
7. CONTRACTORS SHALL NOT TURN WATER VALVES WITHOUT PRIOR APPROVAL FROM THE CITY.
8. ALL METALLIC UNDERGROUND PIPING SHALL BE PROTECTED AGAINST CORROSION PER CITY STANDARD SPECIFICATIONS.
9. THE CONTRACTOR IS RESPONSIBLE FOR PERFORMING LOCATE SERVICES FOR THOSE FACILITIES INSTALLED BY THE CONTRACTOR UNTIL SUCH TIME AS THE WORK HAS BEEN OFFICIALLY ACCEPTED BY THE CITY OF MILPITAS. THE MARKING, LABELING, AND TIMING OF SUCH LOCATES SHALL BE IN CONFORMANCE WITH THE REQUIREMENTS OF UNDERGROUND SERVICE ALERT.

PIPING SCHEDULE (REFER TO SECTION 15050 FOR REQUIREMENTS):

ABBR.	SYSTEM	SIZE	TYPE
		PROCESS	
AR	ARTESIAN RELIEF	<12"	BURIED: DIP-B EXPOSED: DIP-F
BW	BACKWASH WATER		
FL	FLUSH LINE		
FTW	FILTER-TO-WASTE		
FW	FILTERED WATER		
RW	RAW WATER		
SW	SURFACE WASH		
TW	TREATED WATER		
SA	SAMPLE	ALL	PVC-P (BURIED & EXPOSED)
		CHEMICALS	
AMS	AMMONIA SULFATE	ALL	PVC-P (BURIED & EXPOSED)
FC	FERRIC CHLORIDE	ALL	PVC-P (BURIED & EXPOSED)
HYPO	SODIUM HYPOCHLORITE	ALL	PVC-P (BURIED & EXPOSED)
		WATER	
PW	POTABLE WATER	<4"	CUP (BURIED & EXPOSED)
		AIR	
CA	COMPRESSED AIR	ALL	CUT (EXPOSED)
VENT	VENT	ALL	PVC-P (EXPOSED)
		DRAIN	
D	BUILDING DRAIN	ALL	CISP (BURIED & EXPOSED)
DR	PROCESS DRAIN	4"<Ø<12"	DIP-B (BURIED)
			DIP-F (EXPOSED)
		<4"	PVC-P (EXPOSED)
SAD	SAMPLE DRAIN	ALL	PVC-P (BURIED & EXPOSED)
SD	STORM DRAIN	ALL	PVC-D (BURIED)
SS	SANITARY SEWER	ALL	PVC-D (BURIED)
			CISP (EXPOSED)

ABBREVIATIONS

AB	AGGREGATE BASE
AC	ASPHALT CONCRETE
AFF	ABOVE FINISH FLOOR
ARV	AIR RELEASE VALVE
BLKG	BLOCKING
BPS	BOOSTER PUMP STATION
BFV	BUTTERFLY VALVE
BTC	BELOW TOP OF CASING
CAV	COMBINATION AIR VALVE
CDF	CONTROLLED DENSITY FILL
CL or ℄	CENTER LINE OR CLASS
CONC	CONCRETE
CMU	CONCRETE MASONRY UNIT
CONT	CONTINUOUS
CO	CLEAN OUT
CLR	CLEAR
DBL	DOUBLE
DI	DRAIN INLET
DIA	DIAMETER
DIP	DUCTILE IRON PIPE
DG	DECOMPOSED GRANITE
DR	DRAIN
DWG	DRAWING
EF	EACH FACE
EL	ELEVATION
ELECT	ELECTRIC
ELB	ELBOW
EP	EDGE OF PAVEMENT
EW	EACH WAY
EX, (E)	EXISTING
EXP	EXPANSION
FFE	FINISHED FLOOR ELEVATION
FL	FLOW LINE
FLG	FLANGED
FCA	FLANGED COUPLING ADAPTER
FT	FEET
GALV	GALVANIZED
GV	GATE VALVE
GA	GAUGE
GAL	GALLONS
GPH	GALLONS PER HOUR
GPM	GALLONS PER MINUTE
HM	HOLLOW METAL
HP	HORSEPOWER
INV	INVERT
IJ	INSULATING JOINT
LBS	POUNDS
LF	LINEAR FEET
LG	LONG
mg/L	MILLIGRAMS PER LITER
µg/L	MICROGRAMS PER LITER
MIN	MINIMUM
MJ	MECHANICAL JOINT
MM	MILLIMETER
NO.	NUMBER
OC	ON CENTER
OD	OUTSIDE DIAMETER
OF	OVERFLOW
PE	PLAIN END
PL,P	PROPERTY LINE
PPD	POUNDS PER DAY
PSI	POUNDS PER SQUARE INCH
PVC	POLY VINYL CHLORIDE
R	RADIUS
RED	REDUCER
REQ'D	REQUIRED
RT	RIGHT
S	SLOPE
SCH	SCHEDULE
SD	STORM DRAIN
SDI	STORM DRAIN INLET
SDMH	STORM DRAIN MANHOLE
SF	SQUARE FEET
SIM	SIMILAR
SHT	SHEET
SQ	SQUARE
SS	SANITARY SEWER
SSMH	SANITARY SEWER MANHOLE
SST	STAINLESS STEEL
SSW	SPENT WASHWATER
STA	STATION
STL	STEEL
T&B	TOP & BOTTOM
THK	THICK
TOC	TOP OF CONCRETE/CURB
TOW	TOP OF WALL
TS	TUBULAR STEEL
TYP	TYPICAL
UNO	UNLESS NOTED OTHERWISE
VTR	VENT THRU ROOF
W/	WITH
W	POTABLE WATER
WWF	WELDED WIRE FABRIC

PIPING/VALVE SYMBOLS

SINGLE LINE / DOUBLE LINE

- GROOVED END COUPLING
- ELBOW UP
- ELBOW DOWN
- TEE UP
- TEE DOWN
- LATERAL UP
- LATERAL DOWN
- CONCENTRIC REDUCER
- ECCENTRIC REDUCER
- PRESSURE CONTROL VALVE
- ELECTROMAGNETIC FLOW METER
- FLANGED COUPLING ADAPTER
- GATE VALVE
- CHECK VALVE
- SWING CHECK VALVE
- PLUG VALVE
- BALL VALVE
- BUTTERFLY VALVE
- BUTTERFLY VALVE WITH PNEUMATIC ACTUATOR
- AIR RELEASE VALVE (ARV) OR COMBINATION AIR VALVE (CAV) OR AIR/VACUUM VALVE (A/VV)

PIPING SERVICES

AR	ARTESIAN RELIEF
AMS	AMMONIUM SULFATE
BW	BACKWASH WATER (SPENT)
CA	COMPRESSED AIR
D	BUILDING DRAIN
DR	PROCESS DRAIN
FC	FERRIC CHLORIDE
FL	FLUSH LINE
FTW	FILTER-TO-WASTE
FW	FILTERED WATER
HYPO	SODIUM HYPOCHLORITE
PW	PLANT WATER
RW	RAW WATER
SA	SAMPLE
SAD	SAMPLE DRAIN
SD	STORM DRAIN
SS	SANITARY SEWER
SW	SURFACE WASH
TW	TREATED WATER
V	VENT

CIVIL SYMBOLS

- NATURAL GROUND OR GRADE
- GRANULAR MATERIAL SUCH AS CRUSHED ROCK OR GRAVEL
- PAVEMENT IN PLAN
- AC PAVEMENT IN SECTION
- EXISTING FENCE
- NEW FENCE
- EXISTING FACILITY
- EXISTING FACILITY UNDERGROUND
- NEW FACILITY
- NEW FACILITY UNDERGROUND
- ×37.3 EXISTING SPOT ELEVATION
- 110.50 FINISH GRADE SPOT ELEVATION
- 112.50 / 112.00 TOP OF CURB ELEVATION / GUTTER OR GROUND ELEVATION
- MANHOLE
- CO CLEANOUT
- CONCRETE IN SECTION
- GRATING
- FLOW DIRECTION
- VALLEY GUTTER
- CR CARD READER
- FIRE HYDRANT

WEST YOST
Water. Engineered.
6800 Koll Center Parkway
Suite 150
Pleasanton, CA 94566
(925) 426-2580
FAX (530) 756-5991

Designer Stamp:

REGISTERED PROFESSIONAL ENGINEER — JEFFREY WANG — No. C60930 Exp. 12-31-26 — CIVIL — STATE OF CALIFORNIA

2/6/2025

Record Drawings

Designer: _____ Date: _____
Public Works Inspector: _____ Date: _____
Utility/Facility Dept. Head: _____ Date: _____
Project Engineer: _____ Date: _____
Public Improvements Initially Accepted by the City Council on: _____ Res. No. _____

Drawn By: ____ Date: ____
Checked By: ____ Date: ____
Designed By: ____ Date: ____

Revisions

Num.	Description	Engr. Aprv.	Date
1			

CITY OF MILPITAS
ENGINEERING DIVISION

McCANDLESS WELL FACILITY
PROJECT NO. 7076

GENERAL NOTES, SYMBOLS, AND ABBREVIATIONS

RECOMMENDED FOR BIDDING BY: Lyhak Eam DATE: 2/7/2025
LYHAK EAM, P.E., Public Works Division Manager – Engineering

DWG NO. G02
PROJECT NO. 7076
Rec. Dwg No.
SCALE: AS SHOWN
SHEET 2 OF 70

N:\Clients\2705 City of Milpitas\30-23-22 McCandless WF\CAD\Production\27030-2302-G02-G04.dwg 2-06-25 10:24:51 AM stanker

BLUEPRINT FOR A CLEAN BAY

Best Management Practices for the Construction Industry

Remember: The property owner and the contractor share ultimate responsibility for the activities that occur on a construction site. You may be held responsible for any environmental damage caused by your subcontractors or employees.

Preventing Pollution: It's Up to Us

In the Santa Clara Valley, storm drains transport water directly to local creeks and San Francisco Bay without treatment. Stormwater pollution is a serious problem for wildlife dependent on our creeks and bays and for the people who live near polluted streams or baylands. Common sources of this pollution include spilled oil, fuel, and fluids from vehicles and heavy equipment; construction debris; sediment created by erosion; landscaping runoff containing pesticides or weed killers; and materials such as used motor oil, antifreeze, and paint products that people pour or spill into a street or storm drain.

Santa Clara Valley Urban Runoff Pollution Prevention Program

Thirteen valley municipalities have joined together with Santa Clara County and the Santa Clara Valley Water District to educate local residents and businesses and fight stormwater pollution. This "blueprint" summarizes "Best Management Practices "(BMPs) for stormwater pollution prevention.

Spill Response Agencies:

1. Dial 911
2. Santa Clara County Environmental Health Services (408) 299-6930
3. Governor's Office of Emergency Services Warning Center (800) 852-7550 (24 hours).

Small Business Hazardous Waste Disposal Program

Santa Clara County businesses that generate less than 27 gallons or 220 pounds of hazardous waste per month are eligible to use Santa Clara County's Small Business Hazardous Waste Disposal Program. Call (408) 299-7300 for a quote, more information or guidance on disposal.

Local Pollution Control Agencies

Santa Clara County Office of Toxics and Solid Waste Management (408) 441-1195

Santa Clara Valley Water District (408) 265-2600

San Jose/Santa Clara Water Pollution Control Plant (408) 945-5300
Serving Milpitas, Cupertino, Los Gatos, Milpitas, Monte Sereno, San Jose, Santa Clara and Saratoga

Fresh Concrete and Mortar Application

Who should use this information?

- Masons and Bricklayers
- Sidewalk Construction Crews
- Patio Construction Workers
- Construction Inspectors
- General Contractors
- Home Builders
- Developers
- Concrete Delivery/Pumping Workers

Storm Drain Pollution from Fresh Concrete And Mortar Applications

Fresh concrete and cement-related mortars that wash into lakes, streams, or estuaries are toxic to fish and the aquatic environment. Disposing of these materials to the storm drains or creeks can block storm drains, causes serious problems, and is prohibited by law.

Doing the Job Right
General Business Practices

- ☐ Wash out concrete mixers only in designated wash-out areas in your yard, away from storm drains and waterways, where the water will flow into a temporary waste pit in a dirt area. Let water percolate through soil and dispose of settled, hardened concrete as garbage. Whenever possible, recycle washout by pumping back into mixers for reuse.
- ☐ Wash out chutes onto dirt areas at site that do not flow to streets or drains.
- ☐ Always store both dry and wet materials under cover, protected from rainfall and runoff and away from storm drains or waterways. Protect dry materials from wind.
- ☐ Secure bags of cement after they are open. Be sure to keep wind-blown cement powder away from streets, gutters, storm drains, rainfall, and runoff.
- ☐ Do not use diesel fuel as a lubricant on concrete forms, tools, or trailers.

During Construction

- ☐ Don't mix up more fresh concrete or cement than you will use in a two-hour period.
- ☐ Set up and operate small mixers on tarps or heavy plastic drop cloths.
- ☐ When cleaning up after driveway or sidewalk construction, wash fines onto dirt areas, not down the driveway or into the street or storm drain.
- ☐ Protect applications of fresh concrete and mortar from rainfall and runoff until the material has dried.
- ☐ Wash down exposed aggregate concrete only when the wash water can (1) flow onto a dirt area; (2) drain onto a bermed surface from which it can be pumped and disposed of properly; or (3) be vacuumed from a catchment created by blocking a storm drain inlet. If necessary, divert runoff with temporary berms. Make sure runoff does not reach gutters or storm drains.
- ☐ When breaking up pavement, be sure to pick up all the pieces and dispose of properly. Recycle large chunks of broken concrete at a local recycling facility.
- ☐ Never bury waste material. Dispose of small amounts of excess dry concrete, grout, and mortar in the trash.
- ☐ Never dispose of washout into the street, storm drains, drainage ditches, or streams.

Heavy Equipment Operation

Who should use this information?

- Vehicle and Equipment Operators
- Site Supervisors
- General Contractors
- Home Builders
- Developers

Stormwater Pollution from Heavy Equipment on Construction Sites

Poorly maintained vehicles and heavy equipment that leak fuel, oil, antifreeze or other fluids on the construction site are common sources of storm drain pollution. Prevent spills and leaks by isolating equipment from runoff channels, and by watching for leaks and other maintenance problems. Remove construction equipment from the site as soon as possible.

Doing the Job Right
Site Planning and Preventive Vehicle Maintenance

- ☐ Designate one area of the construction site, well away from streams or storm drain inlets, for auto and equipment parking, refueling, and routine vehicle and equipment maintenance. Contain the area with berms, sand bags, or other barriers.
- ☐ Maintain all vehicles and heavy equipment. Inspect frequently for and repair leaks.
- ☐ Perform major maintenance, repair jobs, and vehicle and equipment washing off site where cleanup is easier.
- ☐ If you must drain and replace motor oil, radiator coolant, or other fluids on site, use drip pans or drop clot hs to catch drips and spills. Collect all spent fluids, store in separate containers. Recycle them wherever possible, otherwise, dispose of them as hazardous wastes.
- ☐ Do not use diesel oil to lubricate equipment parts, or clean equipment. Use only water for any onsite cleaning.
- ☐ Cover exposed fifth wheel hitches and other oily or greasy equipment during rain events.
- ☐ Use as little water as possible for dust control. Ensure water used doesn't leave silt or discharge to storm drains.

Spill Cleanup

- ☐ Clean up spills immediately when they happen.
- ☐ Never hose down "dirty" pavement or impermeable surfaces where fluids have spilled. Use dry cleanup methods (absorbent materials, cat litter, and/or rags) whenever possible and properly dispose of absorbent materials.
- ☐ Sweep up spilled dry materials immediately. Never attempt to "wash them away" with water, or bury them.
- ☐ Clean up spills on dirt areas by digging up and properly disposing of contaminated soil.
- ☐ Report significant spills to the appropriate local spill response agencies immediately. In Milpitas, dial 9-1-1 if hazardous materials might enter the storm drain.

Earth-Moving and Dewatering Activities

Who should use this information?

- Bulldozer, Back Hoe, and Grading Machine Operators
- Dump Truck Drivers
- Site Supervisors
- General Contractors
- Home Builders
- Developers

Storm Drain Pollution from Earth-Moving Activities

Soil excavation and grading operations loosen large amounts of soil that can flow or blow into storm drains when handled improperly. Sediments in runoff can clog storm drains, smother aquatic life, and destroy habitats in creeks and the Bay. Effective erosion control practices reduce the amount of runoff crossing a site and slow the flow with check dams or roughened ground surfaces.

Contaminated groundwater is a common problem in the Santa Clara Valley. Depending on soil types and site history, groundwater pumped from construction sites may be contaminated with toxics (such as oil or solvents) or laden with sediments. Any of these pollutants can harm wildlife in creeks or the Bay, or interfere with wastewater treatment plant operation. Discharging sediment-laden water from a dewatering site into any water of the state without treatment is prohibited.

Doing the Job Right
General Business Practices

- ☐ Schedule excavation and grading work during dry weather.
- ☐ Perform major equipment repairs away from the job site.
- ☐ When refueling or vehicle/equipment maintenance must be done on site, designate a location away from storm drains.
- ☐ Do not use diesel oil to lubricate equipment parts, or clean equipment.

Practices During Construction

- ☐ Remove existing vegetation only when absolutely necessary. Plant temporary vegetation for erosion control on slopes or where construction is not immediately planned.
- ☐ Protect downslope drainage courses, streams, and storm drains with wattles, or temporary drainage swales. Use check dams or ditches to divert runoff around excavations. Refer to the Regional Water Quality Control Board's Erosion and Sediment Control Field Manua l for proper erosion and sediment control measures, and California Stormwater Quality Association Stormwater Best Management Practice Handbook (construction, 2003)
- ☐ Cover stockpiles and excavated soil with secured tarps or plastic sheeting.

Dewatering Operations
Check for Toxic Pollutants

- ☐ Check for odors, discoloration, or an oily sheen on groundwater.
- ☐ Call your local wastewater treatment agency and ask whether the groundwater must be tested.
- ☐ If contamination is suspected, have the water tested by a certified laboratory.
- ☐ Depending on the test results, you may be allowed to discharge pumped groundwater to the storm drain (if no sediments present) or sanitary sewer. OR, you may be required to collect and haul pumped groundwater offsite for treatment and disposal at an appropriate treatment facility.

Check for Sediment Levels

- ☐ If the water is clear, the pumping time is less than 24 hours, and the flow rate is less than 20 gallons per minute, you may pump water to the street or storm drain.
- ☐ If the pumping time is more than 24 hours and the flow rate greater than 20 gpm, call your local wastewater treatment plant for guidance.
- ☐ If the water is not clear, solids must be filtered or settled out by pumping to a settling tank prior to discharge. Options for filtering include:
  - Pumping through a perforate pipe sunk part way into a small pit filled with gravel;
  - Pumping from a bucket placed below water level using a submersible pump;
  - Pumping through a filtering device such as a swimming pool filter or filter fabric wrapped around end of suction pipe.
- ☐ When discharging to a storm drain, protect the inlet using a barrier of burlap bags filled with drain rock, or cover inlet with filter fabric anchored under the grate. OR pump water through a grassy swale prior to discharge.

Detecting Contaminated Soil or Groundwater

Contaminated groundwater is a common problem in the Santa Clara Valley. It is essential that all contractors and subcontractors involved know what to look for in detecting contaminated soil or groundwater, and testing ponded groundwater before pumping. Watch for any of these conditions:

1. Unusual soil conditions, discoloration or odor.
2. Abandoned under-ground tanks.
3. Abandoned wells.
4. Buried barrels, debris or trash.

If any of these are found follow the procedures below.

Roadwork and Paving

Who should use this information?

- Road Crews
- Driveway/Sidewalk/Parking Lot Construction Crews
- Seal Coat Contractors
- Operators of Grading Equipment, Paving Machines, Dump Trucks, Concrete Mixers
- Construction Inspectors
- General Contractors
- Developers
- Home Builders

Storm Drain Pollution from Roadwork

Road paving, surfacing, and pavement removal happen right in the street, where there are numerous opportunities for asphalt, saw-cut slurry, or excavated material to illegally enter storm drains. Extra planning is required to store and dispose of materials properly and guard against pollution of storm drains, creeks, and the Bay.

Doing the Job Right
General Business Practices

- ☐ Develop and implement erosion/sediment control plans for roadway embankments.
- ☐ Schedule excavation and grading work during dry weather.
- ☐ Check for and repair leaking equipment.
- ☐ Perform major equipment repairs at designated areas in your maintenance yard, where cleanup is easier. Avoid performing equipment repairs at construction sites.
- ☐ When refueling or when vehicle/equipment maintenance must be done on site, designate a location away from storm drains and creeks.
- ☐ Do not use diesel oil to lubricate equipment parts or clean equipment.
- ☐ Recycle used oil, concrete, broken asphalt, etc. whenever possible, or dispose of properly.

During Construction

- ☐ Avoid paving and seal coating in wet weather, or when rain is forecast, to prevent fresh materials from contacting stormwater runoff.
- ☐ Cover and seal catch basins and manholes when applying seal coat, slurry seal, fog seal, or similar materials.
- ☐ Protect drainage ways by using earth dikes, sand bags, or other controls to divert or trap and filter runoff.
- ☐ Never wash excess material fr om exposed aggregate concrete or similar treatments into a street or storm drain. Collect and recycle, or dispose to dirt area.
- ☐ Cover stockpiles (asphalt, sand, etc.) and other construction materials with plastic tarps. Protect from rainfall and prevent runoff with temporary roofs or plastic sheets and berms.
- ☐ Park paving machines over drip pans or absorbent material (cloth, rags, etc.) to catch drips when not in use.
- ☐ Clean up all spills and leaks using "dry" methods (with absorbent materials and/or rags) Dig up, remove, and properly dispose of contaminated soil.
- ☐ Collect and recycle or appropriately dispose of excess abrasive gravel or sand.
- ☐ Avoid over-application by water trucks for dust control.

Asphalt/Concrete Removal

- ☐ Avoid creating excess dust when breaking asphalt or concrete.
- ☐ After breaking up old pave ment, be sure to remove all chunks and pieces. Make sure broken pavement does not come in contact with rainfall or runoff.
- ☐ When making saw cuts, use as little water as possible. Shovel or vacuum saw-cut slurry and remove from the site. Cover or protect storm drain inlets during saw-cutting. Sweep up, and properly dispose of, all residues.
- ☐ Sweep, never hose down streets to clean up tracked dirt. Use a street sweeper or vacuum truck. Do not dump vacuumed liquor in storm drains.

Painting and Application of Solvents and Adhesives

Who should use this information?

- Painters
- Paperhangers
- Plasterers
- Graphic Artists
- Dry Wall Crews
- Floor Covering Installers
- General Contractors
- Home Builders
- Developers
- Homeowners

Storm Drain Pollution from Paints, Solvents, and Adhesives

All paints, solvents, and adhesives contain chemicals that are ha rmful to wildlife in local creeks, San Francisco Bay, and the Pacific Ocean. Toxic chemicals may come from liquid or solid products or from cleaning residues or rags. Paint material and wastes, adhesives and cleaning fluids should be recycled when possible, or disposed of properly to prevent these materials from flowing into storm drains and watercourses.

Doing the Job Right
Handling Paint Products

- ☐ Keep all liquid paint products and wastes away from the gutter, street, and storm drains. Liquid residues from paints, thinners, solvents, glues, and cleaning fluids are hazardous wastes and must be disposed of as hazardous.
- ☐ Wash water from painted buildings constructed before 1978 can contain high amounts of lead, even if paint chips are not present. Before you begin stripping paint or cleaning pre-1978 building exteriors with water under high pressure, test paint for lead by taking paint scrapings to a local laboratory. See Yellow Pages for a state-certified laboratory.
- ☐ If there is loose paint on the building, or if the paint tests positive for lead, block storm drains. Check with the wastewater treatment plant to determine whether you may discharge water to the sanitary sewer, or if you must send it offsite for disposal as hazardous waste.

Paint Removal

- ☐ Paint chips and dust from non-hazardous dry stripping and sand blasting may be swept up or collected in plastic drop cloths and disposed of as trash.
- ☐ Chemical paint stripping residue and chips and dust from marine paints or paints containing lead, mercury or tributyl tin must be disposed of as hazardous wastes. Lead based paint removal requires a state-certified contractor.
- ☐ When stripping or cleaning building exteriors with high-pressure water, block storm drains. Direct wash water onto a dirt area to find out if you can collect (mop or vacuum) building cleaning water and dispose to the sanitary sewer. Sampling of the water may be required to assist the wastewater treatment authority in making its decision.

Painting Cleanup

- ☐ Never clean brushes or rinse paint containers into a street, gutter, storm drain, French drain, or stream.
- ☐ For water-based paints, paint out brushes to the extent possible, and rinse into a drain that goes to the sanitary sewer. Never pour paint down a storm drain. Dispose of excess liquids and residue as hazardous waste.
- ☐ For oil-based paints, paint out brushes to the extent possible and clean with thinner or solvent in a proper container. Filter and reuse thinners and solvents. Dispose of excess liquids and residue as hazardous waste.
- ☐ When thoroughly dry, empty paint cans, used brushes, rags, and drop cloths may be disposed of as garbage in a sanitary landfill. Leave lids off paint cans so the refuse collector cam see that they are empty. Empty, dry paint cans also may be recycled as metal.
- ☐ Dispose of empty aerosol paint cans as hazardous waste or at household hazardous waste collection events.

Recycle/Reuse Leftover Paints Whenever Possible

- ☐ Donate excess water-based (latex) paint for reuse.
- ☐ Reuse leftover oil-based paint. Dispose of non-recyclable thinners, sludge and unwanted paint, as hazardous waste.
- ☐ Unopened cans of paint may be able to be returned to the paint vendor. Check with the vendor regarding its "buy-back" policy.

General Construction and Site Supervision

Who should use this information?

- General Contractors
- Site Supervisors
- Inspectors
- Home Builders
- Developers
- Homeowners

Storm Drain Pollution from Construction Activities

Construction sites are common sources of storm water pollution. Materials and wastes that blow or wash into a storm drain, gutter, or street have a direct impact on local creeks and the Bay.

As a contractor, or site supervisor, owner or operator of a site, you may be responsible for any environmental damage caused by your subcontractors or employees.

Doing the Job Right
General Principles

- ☐ Keep an orderly site and ensure good housekeeping practices are used.
- ☐ Maintain equipment properly.
- ☐ Cover materials when they are not in use.
- ☐ Keep materials away from streets, storm drains and drainage channels.
- ☐ Ensure dust control water doesn't leave site or discharge to storm drains.

Advance Planning To Prevent Pollution

- ☐ Schedule excavation and grading activities for dry weather periods. To reduce soil erosion, plant temporary vegetation or place other erosion controls before rain begins. Use the Erosion and Sediment Control Field Manual , available form the Regional Water Quality Control Board San Francisco Bay Region, as a reference.
- ☐ Control the amount of runoff crossing your site (especially during excavation!) by using berms or temporary or permanent drainage ditches to divert water flow around the site. Reduce stormwater runoff velocities by constructing temporary check dams or berms where appropriate.
- ☐ Train your employees and subcontractors. Make these brochures available to everyone who works on the construction site. Inform subcontractors about the stormwater requirements and their own responsibilities.

Good Housekeeping Practices

- ☐ Designate one area of the site for auto parking, vehicle refueling, and routine equipment maintenance. The designated area should be well away from streams or storm drain inlets, bermed if necessary. Make major repairs off site.
- ☐ Keep materials out of the rain – prevent runoff contamination at the source. Cover exposed piles of soil or construction materials with plastic sheeting or temporary roofs. Before it rains, sweep and remove materials from surfaces that drain to storm drains, creeks, or channels.
- ☐ Keep pollutants off exposed surfaces. Place trash cans and recycling receptacles around the site to minimize litter.
- ☐ Clean up leaks, drips and other spills immediately so they do not contaminate soil or groundwater or leave residue on paved surfaces.
- ☐ Never hose down "dirty" pavement or surfaces where materials have spilled.
- ☐ Use dry cleanup methods whenever possible. If you must use water, use just enough to keep the dust down.
- ☐ Cover and maintain dumpsters. Check frequently for leaks. Place dumpsters under roofs or cover with tarps or plastic sheeting secured around the outside of the dumpster. Never clean out a dumpster by hosing it down on the construction site.
- ☐ Place portable toilets away from storm drains. Make sure portable toilets are in good working order. Check frequently for leaks .

Materials/Waste Handling

- ☐ Practice Source Reduction – minimize waste when you order materials. Order only the amount you need to finish the job.
- ☐ Use recyclable materials whenever possible. Arrange for pick-up of recyclable materials such as concrete, asphalt, scrap metal, solvents, degreasers, cleared vegetation, paper, rock, and vehicle maintenance materials such as used oil, antifreeze, batteries, and tires.
- ☐ Dispose of all wastes properly. Many construction materials and wastes, including solvents, water-based paints, vehicle fluids, broken asphalt and concrete, wood, and cleared vegetation can be recycled.
  Materials that cannot be recycled must be taken to an appropriate landfill or disposed of as hazardous waste.
  Never bury waste materials or leave them in the street or near a creek or stream bed.

Permits

- ☐ In addition to local grading and building permits, you will need to obtain coverage under the State's General Construction Activity Stormwater Permit if your construction site's disturbed area totals 1 acre or more. Information on the General Permit can be obtained from the Regional Water Quality Control Board.

Landscaping,Gardening, And Pool Maintenance

Who should use this information?

- Landscapers
- Gardeners
- Swimming Pool/Spa Service and Repair Workers
- General Contractors
- Home Builders
- Developers
- Homeowners

Storm Drain Pollution from Landscaping and Swimming Pool Maintenance

Many landscaping activities expose soils and increase the likelihood that earth and garden chemicals will run off into the storm drains during irrigation or when it rains. Swimming pool water containing chlorine and copper-based algaecides should never be discharged to storm drains. These chemicals are toxic to aquatic life.

Doing the Job Right
General Business Practices

- ☐ Protect stockpiles (e.g. asphalt, sand, or soil) and landscaping materials from wind and rain by storing them under tarps or secured plastic sheeting.
- ☐ Store pesticides, fertilizers, and other chemicals indoors or in a shed or storage cabinet.
- ☐ Schedule grading and excavation projects during dry weather.
- ☐ Use temporary check dams or ditches to divert runoff away from storm drains.
- ☐ Protect storm drains with sandbags or other sediment controls.
- ☐ Revegetation is an excellent form of erosion control for any site. Replant as soon as possible with temporary vegetation such as grass seed.

Landscaping/Garden Maintenance

- ☐ Consider using Integrated Pest Management Techniques. Use pesticides sparingly, according to instructions on the label. Rinse empty containers, and use rinsewater as product. Dispose of rinsed, empty containers in the trash.
- ☐ Dispose of unused pesticides as hazardous waste.
- ☐ Collect lawn and garden clippings, pruning waste, and tree trimmings. Chip if necessary, and compost if possible.
- ☐ Do not blow or rake leaves, etc. into the street, or place yard waste in gutters or on dirt shoulders. Sweep up any leaves, litter or residue in gutters or on street.

Pool/Fountain/Spa Maintenance
Draining pools or spas

- ☐ When it's time to drain a pool, spa, or fountain, please be sure to call your local wastewater treatment plant before you start for further guidance on flow rate restrictions, backflow prevention, and handling special cleaning waste (such as acid wash). Discharge flows should be kept to the low levels typically possible through a garden hose. Higher flow rates may be prohibited by local ordinance.
- ☐ Never discharge pool or spa water to a street or storm drain; discharge to a sanitary sewer cleanout.
- ☐ If possible, when emptying a pool or spa, let chlorine dissipate for a few days and then recycle/ reuse water by draining it gradually onto a landscaped area. OR
- ☐ San Jose/Santa Clara Water Pollution Control Plant (408) 945-5300. You may be able to discharge to the sanitary sewer by running the hose to a utility sink or sewer pipe clean-out.
- ☐ Do not use copper-based algaecides Control algae with chlorine or other alternatives, such as sodium bromide.

Filter Cleaning

- ☐ Never clean a filter in the street or near a storm drain. Rinse cartridge and diatomaceous earth filters onto a dirt area, and spade filter residue into soil. Dispose of spent diatomaceous earth in the garbage.
- ☐ If there is no suitable dirt call San Jose/Santa Clara Water Pollution Control Plant (408) 945-5300 for instructions on discharging filter backwash or rinse water to the sanitary sewer.

Milpitas Municipal Code (MMC) 2014

XI-16-11 Accidental Discharge - Notification of Discharge

(a) All persons shall notify the City by telephone immediately by dialling 911 upon accidentally discharging any material other than an acceptable discharge into a storm drain or watercourse to enable countermeasures to be taken by the City to minimize damage to storm drains and the receiving waters. Prohibited discharges include but are not limited to:
(1) Sewage;
(2) Discharges of wash water resulting from the cleaning of exterior surfaces and pavement, or the equipment and other facilities of any commercial business, or any other public or private facility;
(3) Discharges of runoff from material storage areas, including containing chemicals, fuels, or other potentially polluting or hazardous materials;
(4) Discharges of pool or fountain water containing chlorine, biocides, or other chemicals; discharges of pool or fountain filter backwash water;
(5) Discharges of sediment, pet waste, vegetation clippings, or other landscape or construction-related wastes; and
(6) Discharges of food-related wastes (e.g., grease, fish processing, and restaurant kitchen mat and trash bin wash water, etc.).
The City, at its sole option, may direct the person or persons responsible for the discharge to perform cleanup activities when it is deemed by the City that the person or persons have the capability to perform such activities. All violations shall be corrected in a timely manner before the next rain event, but no longer than ten (10) business days after the violations are discovered.
(b) The person deemed by the City responsible for the discharge shall, within five (5) days of the date of occurrence, provide a detailed written statement to the City Manager or his or her designee describing the causes of the accidental discharge and the measures being taken to prevent future occurrences. Such notification will not relieve persons of liability for violations of this Chapter or for any fines imposed on the City on account thereof under Section 13350 of the California Water Code, or for violation of Section 5650 of the California Fish and Wildlife Code, or any other applicable provisions of State or federal law.
(c) Persons deemed by the City responsible for the discharge are responsible for all expenses resulting from the discharge, including, but not limited to, damages, fines, and costs of clean-up, whether performed by their own efforts, City efforts, or the efforts of a third party. Reimbursement of City efforts shall be determined by the number of personnel required and amount of time necessary for the coordination of City efforts and actual clean-up. All personnel costs shall be charged at their current fully-burdened rate, including overtime, plus any and all other direct costs.

XI-16-14 Enforcement and Penalties

(a) Criminal Penalties. Violations of the provisions of this Chapter shall be subject to criminal penalties as provided in Section I-1-4.09-1 of this Code.

(b) Judicial Civil Penalties. Any person who intentionally or negligently violates any provision of this Chapter or any provision of any permit or certificate issued pursuant to this Chapter shall be civilly liable to the city in a sum not to exceed twenty-five thousand dollars per day for each day in which such violation occurs.

(c) Administrative Citations. When the City Manager and/or his or her designee determines that one or more violations of this Chapter have occurred an administrative citation may be issued pursuant to the procedures set forth in Sections V-500-8.00 through V-500-8.06. The schedule of fines for administrative citations issued for violations of this Chapter shall be set forth in the schedule of fines established by resolution of the City Council.

(d) Notice of Noncompliance. If the severity of the violation warrants immediate action, a Notice of Noncompliance or Stop Work Notice shall be issued, permits may be suspended or revoked, Stormwater Pollution Prevention Plans may be found in noncompliance, and corrective actions may be implemented in accordance with Section 11 of this Chapter. For all other cases, including those sites or projects where a stormwater pollution prevention plan is not required, the City Manager or his or her designee shall issue a Notice of Noncompliance that shall enumerate the violations found. The City Manager or his or her designee shall order compliance by a date or hour certain at his or her discretion. If the violations are not abated in the time period identified in the Notice of Noncompliance, the site shall be deemed to be in noncompliance with federal, State and local laws and the City Manager or his or her designee shall have the authority to issue a Stop Work Notice and/or deem the Stormwater Pollution Prevention Plan inadequate. If a Stop Work Notice is issued, corrective actions must be performed until the site has achieved compliance. Corrective actions may include revision and resubmission of any Plan, including, but not limited to, Stormwater Pollution Prevention Plan, Erosion Control Plan or Grading Plan. The City Manager or his or her designee may also require a discharger that has violated any discharge limits contained in this Chapter to install a temporary system for the capture, testing, and release of stormwater.

(e) Suspension of Utility Service. The City may, without prior notice, suspend water service, sanitary sewer service, and/or storm drain discharge access to a person discharging to the storm drain system when such suspension is necessary to stop an actual or threatened discharge which presents, or may present, imminent and substantial danger to the environment or to the health or welfare of persons; or presents, or may present, imminent and substantial danger to the storm drain system.

(f) For construction projects where a total of three or more Stop Work Notices and Notices of Noncompliance for urban runoff violations have been issued, the City Manager or his or her designee may require the contractor to hire a Qualified SWPPP Developer (QSD) or Qualified SWPPP Practitioner (QSP) within three business days. The QSD/QSP shall establish effective BMPs, provide guidance for improvement for the duration of the project, and certify compliance. A Stop Work Notice shall be issued for failure to comply.

(g) Remedies Cumulative. The remedies provided in this section are cumulative and not exclusive, and shall be in addition to any other penalty provided for in this Chapter and shall be in addition to all other remedies available to the City under State and federal law.

WEST YOST
Water. Engineered.

6800 Koll Center Parkway
Suite 150
Pleasanton, CA 94566
(925) 426-2580
FAX (530) 756-5991

Designer Stamp:

REGISTERED PROFESSIONAL ENGINEER — JEFFREY WANG — No. C60930 Exp. 12-31-26 — CIVIL — STATE OF CALIFORNIA

2/6/2025

Record Drawings

Designer: _____ Date: _____
Public Works Inspector: _____ Date: _____
Utility/Facility Dept. Head: _____ Date: _____
Project Engineer: _____ Date: _____
Public Improvements Initially Accepted by the City Council on: _____ Res. No. _____

Drawn By: ____ Date: ____
Checked By: ____ Date: ____
Designed By: ____ Date: ____

Revisions

Num.	Description	Engr. Aprv.	Date
1			

CITY OF MILPITAS
ENGINEERING DIVISION

McCANDLESS WELL FACILITY
PROJECT NO. 7076

BLUEPRINT FOR A CLEAN BAY

RECOMMENDED FOR BIDDING BY: Lyhak Eam DATE: 2/7/2025
LYHAK EAM, P.E., Public Works Division Manager – Engineering

DWG NO. G03
PROJECT NO. 7076
Rec. Dwg No.
SCALE: AS SHOWN
SHEET 3 OF 70

S:\Clients\2770 City of Milpitas\30-23-27 McCandless WFF\CAD\Production\27030-23027-0002-G04.dwg 2-06-25 10:26:14 AM stanker

CITY OF MILPITAS
Building Safety Department
455 E. Calaveras Blvd.
Milpitas, CA 95035
408-586-3240
www.milpitas.gov

2022 CALGREEN MANDATORY MEASURES CHECKLIST (NON-RESIDENTIAL)

This checklist applies to newly constructed buildings, building additions of 1,000 square feet or greater, and/or building alterations with a permit valuation of $200,000 or above. Code sections relevant to additions and alterations shall only apply to the portions of the building being added or altered within the scope of the permitted work. (sec. 301.3)

Parenthetical references are to the noted section of the *2022 California Green Building Code*, unless stated otherwise.

Measures in this checklist apply to both newly constructed buildings and additions and alterations unless noted with the following banner (sec. 301.1):
[N] = Measures applicable to newly constructed buildings only
[A] = Measures applicable to additions and alterations only

Mandatory Feature or Measure	Required
PLANNING AND DESIGN	
Site Development (5.106)	
Projects less than one acre. Newly constructed projects and additions which disturb less than one acre of land and are not part of a larger common plan of development or sale shall prevent the pollution of storm water runoff from the construction activities through one or more of the following measures: **Local ordinance**. Comply with a lawfully enacted storm water management and/or erosion control ordinance. **Best management practices (BMP).** Prevent the loss of soil through wind or water erosion by implementing an effective combination of erosion and sediment control and good housekeeping BMP's as described in section 5.106.1.2. **Projects one acre or more.** Newly constructed projects or additions which disturb one acre or more of land, or disturb less than one acre of land but are part of a larger common plan of development or sale, shall comply with Milpitas Municipal Code Title 2 Chapter 13 for erosion and sediment controls, the City of Milpitas Enforcement Response Plan for Construction Site Control, and the California Regional Water Quality Control Board San Francisco Bay Region Municipal Regional Stormwater NPDES Permit requirements.	✓
Short-term bicycle parking. If the new project or an addition or alteration is anticipated to generate visitor traffic, provide permanently anchored bicycle racks within 200 feet of the visitors' entrance, readily visible to passers-by, for 5% of new visitor motorized vehicle parking spaces being added, with a minimum of one two-bike capacity rack. **Exception:** Additions or alterations which add nine or less visitor vehicular parking spaces.	N/A
Long-term bicycle parking. For new buildings with over 10 tenant-occupants or for additions or alterations that add 10 or more tenant vehicular parking spaces, provide secure bicycle parking for 5% of the tenant vehicular parking spaces being added, with a minimum of one bicycle parking facility. **Shell Buildings**. For phased projects, provide secure bicycle parking for 5% of the anticipated tenant-occupant vehicular parking spaces with a minimum of one bicycle parking facility. **Acceptable bicycle parking.** Must be convenient from the street and meet one of the following: Covered, lockable enclosures with permanently anchored racks for bicycles OR Lockable bicycle rooms with permanently anchored racks OR Lockable, permanently anchored bicycle lockers.	N/A
Electric vehicle (EV) charging. [N] Construction to provide electric vehicle infrastructure and facilitate electric vehicle charging shall comply with sec. 5.106.5.3.1 and shall be provided in accordance with the California Building Code (CBC) and California Electrical Code (CEC).	N/A
EV capable spaces. [N] EV capable spaces shall be provided in accordance with Table 5.106.5.3.1 and the requirements of section 5.106.5.3.1. • Mark reserved overcurrent protective devices and raceway terminations as "EV CAPABLE".	N/A

Electric vehicle charging stations (EVCS). EV capable spaces shall be provided with EVSE to create EVCS in the number indicated in Table 5.106.5.3.1. The EVCS required by Table 5.106.5.3.1 may be provided with EVSE in any combination of Level 2 and Direct Current Gast Charging (DCFC), except that at least one Level 2 EVSE shall be provided. • One EV charger with multiple connectors capable of charging multiple EVs simultaneously may be permitted, subject to the capacity requirements of section 5.106.5.3.2. • Each installed DCFC EVSE shall be permitted to reduce the number of required EV capable spaces without EVSE by five.	N/A
Use of automatic load management systems (ALMS). ALMS shall be permitted for EVCS, which may reduce the required electrical load capacity as per sec. 5.106.5.3.3.	N/A
Accessible EVCS. When EVSE is installed, accessible EVCS shall be provided in accordance with the *California Building Code*, Chapter 11B, Section 11B-228.3.	N/A
Electric vehicle (EV) charging: medium-duty and heavy-duty. [N] Construction shall comply with Section 5.106.5.4.1 to facilitate future installation of electric vehicle supply equipment (EVSE). Construction for warehouses, grocery stores and retail stores with planned off-street loading spaces shall also comply with Section 5.106.5.4.1 for future installation of medium- and heavy-duty EVSE. • Where EVSE(s) is/are installed, it shall be in accordance with the *California Building Code*, the *California Electrical Code*, and the additional requirements of sec. 5.106.5.4.1.	N/A
Electric vehicle charging readiness requirements for warehouses, grocery stores and retail stores with planned off-street loading spaces. In order to avoid future demolition when adding EV supply and distribution equipment, spare raceway(s) or busway(s) and adequate capacity for transformer(s), service panel(s) shall be installed in accordance with the *California Electrical Code*. • Construction plans and specifications shall include at least the elements described in sec. 5.106.5.4.1 and Table 5.106.5.4.1.	N/A
Light pollution reduction. [N] Outdoor lighting systems shall be designed and installed to comply with the requirements of 5.106.8.	✓
Grading and paving. Construction plans shall indicate how site grading, or a drainage system will manage all surface water flows to keep water from entering buildings. **Exception:** Additions and alterations not altering the drainage path.	✓
ENERGY EFFICIENCY (5.201)	
For the purposes of mandatory energy efficiency standards in this code, the California Energy Commission will continue to adopt mandatory building standards.	✓
WATER EFFICIENCY AND CONSERVATION	
Indoor Water Use (5.303)	
All noncompliant plumbing fixtures in any commercial real property shall be replaced with water-conserving plumbing fixtures. Plumbing fixture replacement is required prior to final inspection. (California Civil Code sec. 1101.5)	N/A
Meters. Separate sub-meters or metering devices shall be installed for the uses described below:	
New buildings or additions in excess of 50,000 square feet. 1. For each individual leased, rented, or other tenant space within the building projected to consume more than 100 gal/day, including, but not limited to, spaces used for laundry or cleaners, restaurant or food service, medical or dental office, laboratory, or beauty salon or barber shop.	N/A
2. Where separate submeters for individual building tenants are unfeasible, for water supplied to the following subsystems: a) Makeup water for cooling towers where flow through is greater than 500 gpm. b) Makeup water for evaporative coolers greater than 6gpm. c) Steam and hot-water boilers with energy input more than 500,000 Btu/h.	N/A
Excess consumption. A separate submeter or metering device shall be provided for any tenant within a new building or within an addition that is projected to consume more than 1,000 gal/day.	N/A

Water conserving plumbing fixtures and fittings. Plumbing fixtures (water closets and urinals) and fittings (faucets and showerheads) shall comply with the following:	
Water closets. The effective flush volume of all water closets shall not exceed 1.28 gpf. Tank-type water closets shall be certified to the performance criteria of the U.S. EPA WaterSense Specification for Tank-Type Toilets.	N/A
Urinals. The effective flush volume of wall-mounted urinals shall not exceed 0.125 gpf. The effective flush volume of floor-mounted or other urinals shall not exceed 0.5gpf.	N/A
Single showerheads. Showerheads shall have a max. flow rate of not more than 1.8 gpm at 80 psi. Showerheads shall be certified to the performance criteria of the U.S. EPA WaterSense Specification for Showerheads.	✓
Multiple showerheads serving one shower. When a shower is served by more than one showerhead, the combined flow rate of all showerheads and/or other shower outlets controlled by a single valve shall not exceed 1.8 gallons per minute at 80 psi, or the shower shall be designed to allow only one shower outlet to be in operation at a time. **Note:** A hand-held shower shall be considered a showerhead. .	N/A
Non-residential lavatory faucets. Lavatory faucets shall have a maximum flow rate of not more than 0.5 gpm at 60 psi.	✓
Kitchen faucets. Kitchen faucets shall have a maximum flow rate of not more than 1.8 gpm at 60psi.	N/A
Wash fountains. Wash fountains shall have a maximum flow rate of not more than 1.8 gpm/20 [rim space (inches) at 60 psi].	✓
Metering faucets. Metering faucets shall not deliver more than 0.20 gallons per cycle.	N/A
Metering faucets for wash fountains. Metering faucets for wash fountains shall have a maximum flow rate of not more than 0.20 gallons per cycle/20 [rim space (inches) at 60psi].	N/A
Pre-rinse spray valve. When installed, shall be equipped with an integral shutoff and comply with the California Code of Regulations as specified in sec. 5.303.3.4.6.	N/A
Commercial kitchen equipment. Dispossers shall either modulate the use of water to no more than 1gpm when the disposer is not in use or shall automatically shut off after no more than 10 min. of inactivity. Disposers shall use no more than 8 gpm of water.	N/A
Outdoor Water Use (5.304)	
Outdoor potable water use in landscape areas. Non-residential developments shall comply with a local water efficient landscape ordinance or the current California Department of Water Resources' Model Water Efficient Landscape Ordinance (MWELO), whichever is more stringent.	N/A
Water Reuse Systems (5.305)	
(Reserved)	
MATERIAL CONSERVATION AND RESOURCE EFFICIENCY	
Water Resistance and Moisture Management (5.407)	
Weather Protection. Provide a weather-resistant exterior wall and foundation envelope as required by California Building Code Section 1402.2 (Weather Protection), manufacturer's installation instructions or local ordinance, whichever is more stringent.	✓
Moisture Control. Employ moisture control measures by the following methods.	
Sprinklers. Design and maintain landscape irrigation systems to prevent spray on structures.	N/A
Entries and Openings. Design exterior entries and openings subject to foot traffic or wind-driven rain to prevent water intrusion into buildings as follows: **Exterior Door Protection.** Primary exterior entries shall be covered to prevent water intrusion by using non-absorbent floor and wall finishes within at least 2 feet around and perpendicular to such openings plus at least one of the methods in sec. 5.407.2.2.1: **Flashing.** Install flashings integrated with a drainage plane.	✓

Construction Waste Reduction, Disposal and Recycling (5.408)	
Construction waste management. Recycle and/or salvage for reuse a minimum of 65% of the non-hazardous construction and demolition waste in accordance with sec. 5.408.1.1, 5.408.1.2 or 5.408.1.3; or meet a local construction and demolition waste management ordinance, whichever is more stringent.	✓
Documentation. Documentation shall be provided to the City of Milpitas Solid Waste Division which demonstrates compliance prior to final inspection.	✓
Universal Waste [A]. Additions and alterations to a building or tenant space that meet the scoping provisions in sec. 301.3 for nonresidential additions and alterations, shall require verification that Universal Waste items such as fluorescent lamps and ballast and mercury containing thermostats as well as other California prohibited Universal Waste materials are disposed of properly and are diverted from landfills. A list of prohibited Universal Waste materials shall be included in the construction documents.	✓
Excavated soil and land clearing debris. 100% of trees, stumps, rocks and associated vegetation and soils resulting primarily from land clearing shall be reused or recycled.	✓
Building Maintenance and Operation (5.410)	
Recycling by occupants. Provide readily accessible areas that serve the entire building and are identified for the depositing, storage, and collection of non-hazardous materials for recycling.	N/A
Additions [A]. All additions conducted within a 12-month period under single or multiple permits, resulting in an increase of 30% or more in floor area, shall provide recycling areas on site. **Exceptions.** Additions within a tenant space resulting in less than a 30% increase in the tenant space floor area.	N/A
Commissioning [N]. For new buildings 10,000 square feet and over, building commissioning shall be included in the design and construction process of the building project to verify that the building systems and components meet the owner's or owner representative's project requirements. Commissioning shall be performed in accordance with sec. 5.410.2 by trained personnel with experience on projects of comparable size and complexity. Commissioning Requirements shall include those items listed in sec. 5.410.2.	N/A
Owner's Project Requirements (OPR) [N]. The expectations and requirements of the building appropriate to its phase shall be documented before the design phase of the project begins. The documentation shall include those items listed in sec. 5.410.2.1.	N/A
Basis of Design (BOD) [N]. A written explanation of how the design of the building systems meets the OPR shall be completed at the design phase of the building project. The Basis of Design documentation shall include those items listed in sec. 5.410.2.2.	N/A
Commissioning plan [N]. Prior to permit issuance a commissioning plan shall be completed to document how the project will be commissioned. The commissioning plan shall include those items listed in sec. 5.410.2.3.	N/A
Functional performance testing [N]. Functional performance tests shall demonstrate the correct installation and operation of each component, system, and system-to-system interface in accordance with the approved plans and specifications. Functional performance testing reports shall contain information addressing each of the building components tested, the testing methods utilized, and include any readings and adjustments made.	N/A
Documentation and Training [N]. A systems manual and systems operations training are required, including Occupational Safety and Health Act (OSHA) requirements in the California Code of Regulations (CCR), Title 8, Section 5142, and other related regulations.	N/A
Systems manual [N]. The Systems Manual, which includes documentation of the operational aspects of the building, shall be delivered to the building owner or representative and the facilities operator. The systems manual shall include those items listed in sec. 5.410.2.5.1.	N/A
Systems operations training [N]. A program for training of the appropriate maintenance staff for each equipment type and/or system shall be developed and documented in the commissioning report. The training program shall include those items listed in sec. 5.410.2.5.2.	N/A

Commissioning report [N]. A report of commissioning process activities undertaken through the design and construction phases of the building project shall be completed and provided to the owner or representative.	N/A
Testing and adjusting. Testing and adjusting of systems shall be required for new buildings less than 10,000 square feet or new systems to serve an addition or alteration subject to sec. 303.1.	✓
Systems. Develop a written plan of procedures for testing and adjusting systems. Systems to be included for testing and adjusting shall be those listed in sec. 5.410.4.2.	✓
Procedures. Perform testing and adjusting procedures in accordance with manufacturer's specifications and applicable standards on each system.	✓
HVAC balancing. Before a new space-conditioning system serving a building or space is operated for normal use, balance the system should in accordance with the procedures defined in sec. 5.410.4.3.1.	✓
Reporting. After completion of testing, adjusting, and balancing, provide a final report of testing signed by the individual responsible for performing these services.	✓
Operation and maintenance (O&M) manual. Provide the building owner or representative with detailed operating and maintenance instructions and copies of guaranties/warranties for each system prior to final inspections.	✓
Inspections and reports. Include a copy of all inspection verifications and reports required by the enforcing agency.	✓
ENVIRONMENTAL QUALITY	
Fireplaces (5.503)	
Fireplaces. Install only a direct-vent sealed-combustion gas or sealed wood-burning fireplace, or a sealed wood-stove or pellet stove, and refer to residential requirements in *California Energy Code*, Title 24, Part 6, Subchapter 7, Section 150. Woodstoves, pellet stoves, and fireplaces shall comply with applicable local ordinances.	N/A
Woodstoves. Woodstove and pellet stoves shall comply with US EPA New Source Performance Standards (NSPS) emission limits as applicable, and shall have a permanent label indicating they are certified to meet the emission limits.	N/A
Bay Area Air Quality Management District. Only gas fireplaces, pellet-fueled devices, or E.P.A. certified wood-burning devices may be installed in new buildings, added to or replace wood-burning devices in existing buildings, or be used when reconstructing or repairing a wood-burning device [Milpitas Municipal Code 11-15].	N/A
Pollutant Control (5.504)	
Temporary ventilation. The permanent HVAC system shall only be used during construction if necessary to condition the building or areas of addition or alteration within the required temperature range for material and equipment installation. If the HVAC system is used during construction, use return air filters with a MERV of 8 or average efficiency of 30%. Replace all filters immediately prior to occupancy, or, if the building is occupied during alteration, at the conclusion of construction.	✓
Covering of duct openings and protection of mechanical equipment during construction. Openings in ducts and other related air distribution components and equipment shall be covered by an acceptable method to reduce the amount of dust, water, and debris which may enter the system from the time these items are stored on the construction site and/or their rough installation until final startup of the system.	✓
Finish material pollutant control. **Adhesives, sealants, and caulks.** Shall comply with VOC limits and prohibitions on use of certain toxic compounds as described in sec. 5.504.4.1.	✓
Paints and coatings. Shall comply with VOC limits as described in sec. 5.504.4.3.	✓
Acrosol paints and coatings. Shall comply with Product-Weighted MIR limits for ROC, VOC, and certain other toxic compounds as described in sec. 5.504.4.3.1.	✓
Carpet systems. Shall meet the requirements of the CDPH "Standard Method for the Testing of Evaluation of Volatile Organic Chemical Emissions from Indoor Sources Using Environmental Chambers". Adhesives shall meet the requirements of Table 5.504.4.1.	N/A

Composite wood products. Hardwood plywood, particleboard and medium density fiberboard composite wood products used on the interior or exterior of the building shall meet the formaldehyde limits described in sec. 5.504.4.5.	N/A
Resilient flooring systems. At least 80% of the floor area shall meet the requirements of the CDPH "Standard Method for the Testing of Evaluation of Volatile Organic Chemical Emissions from Indoor Sources Using Environmental Chambers".	N/A
Thermal insulation. Comply with the requirements of the CDPH "Standard Method for the Testing of Evaluation of Volatile Organic Chemical Emissions from Indoor Sources Using Environmental Chambers".	✓
Acoustical ceilings and wall panels. Comply with the requirements of the CDPH "Standard Method for the Testing of Evaluation of Volatile Organic Chemical Emissions from Indoor Sources Using Environmental Chambers".	N/A
Verification. Maintain documentation suitable to verify compliance with sec. 5.504.4, which shall be provided to the enforcing agency upon request.	✓
Filters. In mechanically ventilated buildings, provide regularly occupied areas of the building with air filtration media for outside and return air prior to occupancy that provides at least a MERV of 13. These must be installed prior to occupancy and recommendations for maintenance with filters of the same value shall be included in the operation and maintenance manual. **Exceptions:** Existing mechanical equipment.	N/A
Labeling. Installed filters shall be clearly labeled by the manufacturer indicating the MERV rating.	N/A
Environmental tobacco smoke (ETS) control. Where outdoor areas are provided for smoking, prohibit smoking within 25 feet of building entries, outdoor air intakes and operable windows and within buildings.	N/A
Indoor Moisture Control (5.505)	
Indoor moisture control. Buildings shall meet or exceed the providions of *California Building Code*, CCR, Title 24, Part 2, Sections 1202 (Ventilation) and Chapter 14 (Exterior Walls). For additional measures, see sec. 5.407.2.	✓
Indoor Air Quality (5.506)	
Outside Air Delivery. For Mechanically or naturally ventilated spaces in buildings, meet the minimum requirements of Section 120.1 of the California Energy Code, or the applicable local code, whichever is more stringent, and Division 1, Chapter 4 of CCR, Title 8.	✓
Carbon dioxide (CO_2) monitoring. For buildings or additions equipped with demand control ventilation, CO_2 sensors and ventilation controls shall be specified and installed in accordance with the California Energy Code sec. 120.1(e)4.	N/A
Environmental Comfort (5.507)	
Acoustical Control. Employ building assemblies and components with Sound Transmission Class (STC) values either the prescriptive or performance methods below. **Exception:** Buildings with few or no occupants or where occupants are not likely to be affected by exterior noise, as determined by the enforcement authority, such as factories, stadiums, storage, enclosed parking garage structures, and utility buildings.	N/A
Prescriptive method - Exterior noise transmission. Wall and roof ceiling assemblies making up the building or addition envelope or altered envelope shall meet a composite STC rating of at least 50, or a composite OITC rating of no less than 40, or OITC of 30 in the following locations: 1. Within the 65 CNEL noise contour of an airport. 2. Within the 65 CNEL or L_{dn} noise contour of a freeway, railroad, industrial source or fixed-guideway source. **Noise Exposure Where Noise Contours Are Not Readily Available.** Buildings exposed to a noise level of 65 dB L_{eq}-1-hr during any hour of operation shall have building, addition or alteration exterior wall and roof-ceiling assemblies exposed to the noise source meeting a composite STC rating of at least 45 (or OITC 35), with exterior windows of a minimum STC of 40 (or OITC 30).	N/A

Performance method. For buildings located as defined in sec. 5.507.4.1 (Prescriptive) or 5.507.4.1.1 (Noise Contour Not Available), wall and roof-ceiling assemblies exposed to the noise source making up the building or addition envelope or altered envelope shall be constructed to provide an interior noise environment attributable to exterior sources that does not exceed an hourly equivalent noise level (L_{eq}-1Hr) of 50 dBA in occupied areas during any hour of operation.	N/A
Documentation of Compliance. An acoustical analysis documenting complying interior sound levels shall be prepared by personnel approved by the architect or engineer of record.	N/A
Interior sound transmission. Wall and floor-ceiling assemblies separating tenant spaces and tenant spaces and public places shall have a STC of at least 40.	N/A
Outdoor Air Quality (5.508)	
Ozone depletion and greenhouse gas reductions. Install HVAC, refrigeration and fire suppression equipment that do not contain Chlorofluorocarbons (CFCs) and Halons.	✓
Supermarket refrigerant leak reduction. New commercial refrigeration systems (including both new facilities and the replacement of existing refrigeration systems in existing facilities) installed in retail food stores 8,000 square feet or more conditioned area, and that utilize either refrigerated display cases, or walk-in coolers or freezers connected to remote compressor units or condensing units and contain high-global-warming potential (High-GWP) refrigerants with a GWP of 150 or greater, shall comply with the following:	N/A
Refrigerant piping. Piping shall be installed to be accessible for leak protection and repairs. Piping runs using threaded pipe, copper tubing with an outside diameter (OD) less than ¼", flared tubing connections and short radius elbows shall not be used in refrigerant systems except as noted in sec. 5.508.2.1.1, 5.508.2.1.2, 5.508.2.1.3, and 5.508.2.1.4.	N/A
Valves. Valves and fittings shall comply with the requirements in sec. 5.508.2.2 and the *California Mechanical Code*.	N/A
Refrigerated service cases. Refrigerated service cases holding food products containing vinegar and salt shall have evaporator coils of corrosion-resistant material, such as stainless steel; or be coated to prevent corrosion from these substances. Consideration shall be given to the heat transfer efficiency of coil coating to maximize energy efficiency.	N/A
Refrigerant receivers. Refrigerant receivers with capacities greater than 200 pounds shall be fitted with a device that indicates the level of refrigerant in the receiver.	N/A
Pressure testing. The system shall be pressure tested during installation prior to evacuation and charging and shall comply with all requirements per sec. 5.508.2.5.	N/A
Evacuation. The system shall be evacuated after pressure testing and prior to charging and shall comply with all requirements per sec. 5.508.2.6.	N/A
INSTALLER AND SPECIAL INSPECTOR QUALIFICATIONS	
Qualifications (702)	
Installer training. HVAC system installers shall be trained and certified in the proper installation of HVAC systems including ducts and equipment by a nationally or regionally recognized training or certification program. For examples, see sec. 702.1.	✓
Special inspection. Special inspectors employed by the owner or owner's agent shall demonstrate competence for the particular type of inspection to be performed and shall have a certification or qualifications acceptable to the enforcing agency. **Note:** Special Inspectors shall be independent entities with no financial interest in the materials or the project they are inspecting for compliance with CalGreen.	✓
Verifications (703)	
Documentation. Documentation used to show compliance with CalGreen shall include but is not limited to, construction documents, plans, specifications, builder or installer certification, inspection reports, or other methods acceptable to the enforcing agency, which demonstrate substantial conformance.	✓

WEST YOST
Water. Engineered.
6800 Koll Center Parkway
Suite 150
Pleasanton, CA 94566
(925) 426-2580
FAX (530) 756-5991

Designer Stamp:
REGISTERED PROFESSIONAL ENGINEER — REY WANG — No. C60930 — Exp. 12-31-26 — CIVIL — STATE OF CALIFORNIA
2/6/2025

Record Drawings
Designer: _____ Date: _____
Public Works Inspector: _____ Date: _____
Utility/Facility Dept. Head: _____ Date: _____
Project Engineer: _____ Date: _____
Public Improvements Initially Accepted by the City Council on: _____ Res. No. _____

Drawn By: ____ Date: _____
Checked By: ____ Date: _____
Designed By: ____ Date: _____

Revisions

Num.	Description	Engr. Aprv.	Date
1			

CITY OF MILPITAS — CALIFORNIA — JANUARY 26, 1954

CITY OF MILPITAS
ENGINEERING DIVISION
McCANDLESS WELL FACILITY
PROJECT NO. 7076
2023 CALGREEN MANDATORY MEASURES CHECKLIST (NON-RESIDENTIAL)
RECOMMENDED FOR BIDDING BY: *Lyhak Eam* DATE: 2/7/2025
LYHAK EAM, P.E., Public Works Division Manager – Engineering

DWG NO. G04
PROJECT NO. 7076
Rec. Dwg No.
SCALE: AS SHOWN
SHEET 4 OF 70

A:\Clients\2970 City of Milpitas\70-23-22 McCandless WEC\CAD\Production\27030-23222-G02-G04.dwg 2-06-25 10:25:39 AM sbohrer

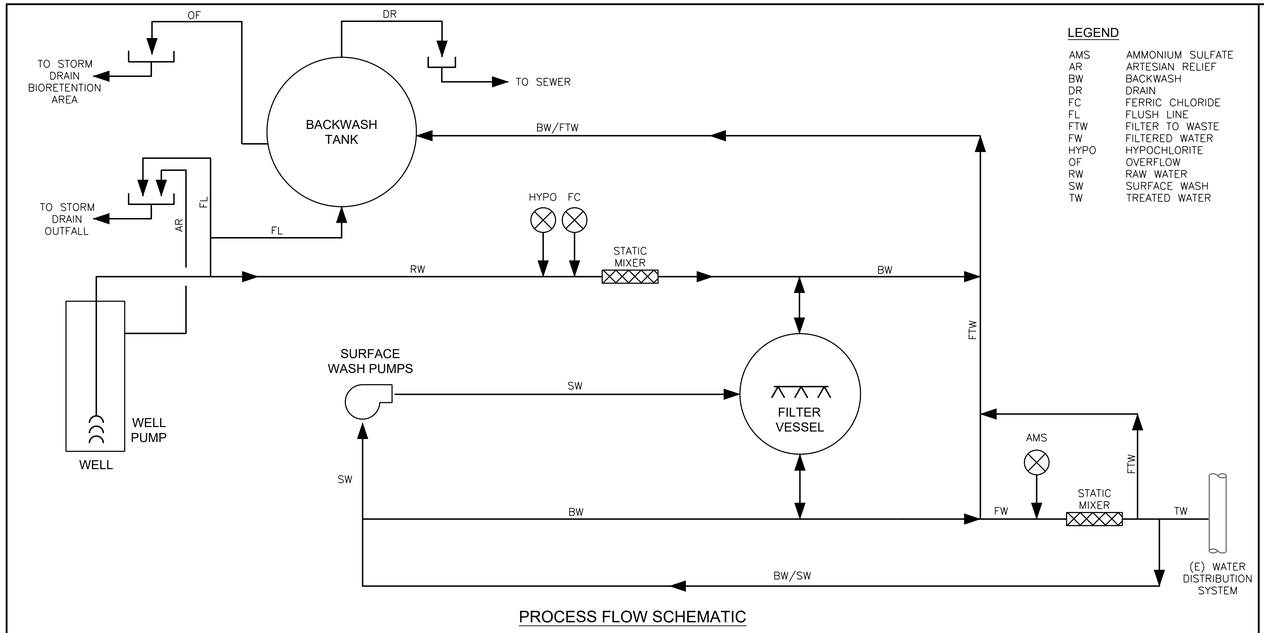

PROCESS FLOW SCHEMATIC

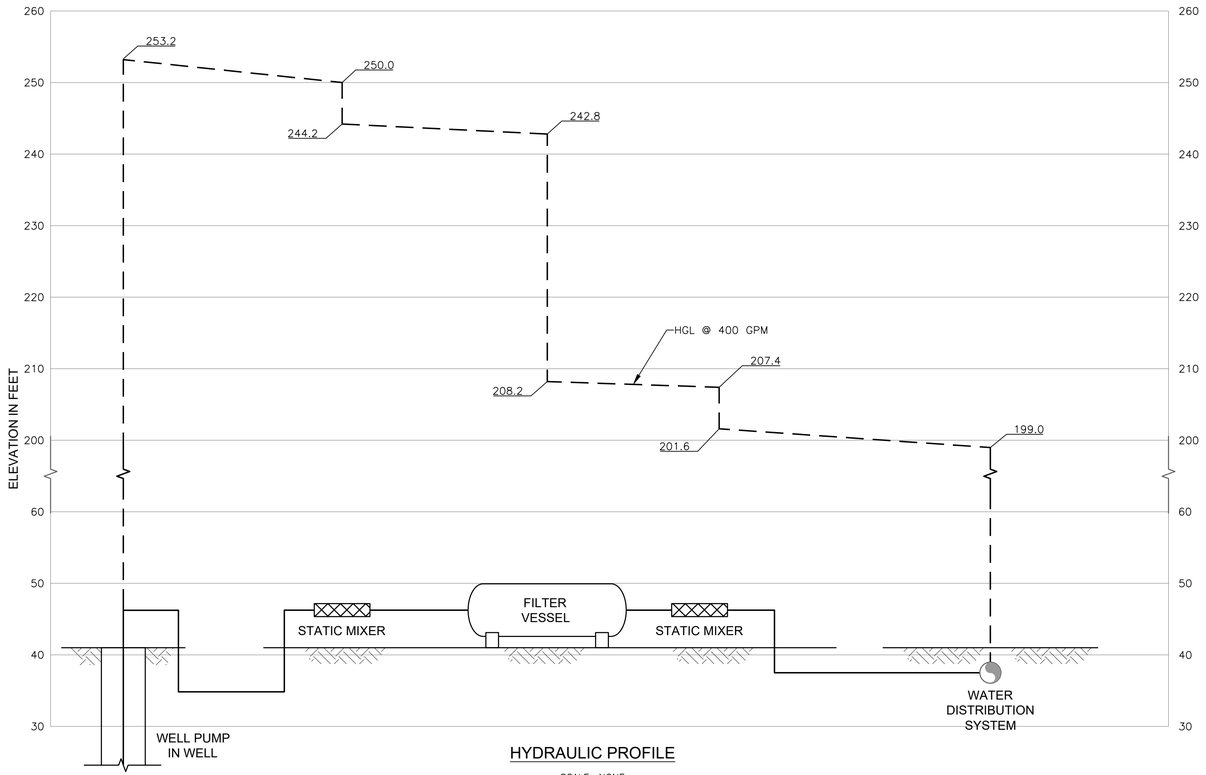

HYDRAULIC PROFILE

SCALE: NONE

DESIGN CRITERIA

ITEM	UNITS	VALUE
PLANT FLOW RATES		
DESIGN PLANT FLOW RATE	GPM	400
SOURCE WATER CHARACTERISTICS		
HARDNESS	mg/L as $CaCO_3$	52 - 240
ALKALINITY	mg/L as $CaCO_3$	111 - 268
pH	-	7.6 - 8.7
AMMONIA	mg/L	N/A
ARSENIC	µg/L	1.4 - 16
IRON	mg/L	0.066 - 0.320
MANGANESE	mg/L	0.072 - 0.180
SULFIDE	mg/L	N/A
PRODUCT WATER QUALITY OBJECTIVES		
ARSENIC	µg/L	< 10
IRON	mg/L	< 0.3
MANGANESE	mg/L	< 0.05
WELL PUMP		
NUMBER OF UNITS	NO.	1
TYPE	-	SUBMERSIBLE
DESIGN FLOW RATE	GPM	400
TOTAL DYNAMIC HEAD	FT	422
MOTOR SIZE	HP	60
SPEED CONTROL	-	VARIABLE SPEED
OXIDATION AND COAGULATION		
OXIDANT	-	CHLORINE
COAGULANT	-	FERRIC CHLORIDE
RAPID MIXER TYPE	-	STATIC MIXER
PRESSURE FILTER		
NUMBER OF UNITS	NO.	1
CAPACITY	GPM	400
FILTER CONFIGURATION		
CONFIGURATION	-	VERTICAL
FILTER DIAMETER	FT	10
FILTER SHELL HEIGHT	FT	8
NUMBER OF FILTER CELLS	NO.	1
TOTAL FILTRATION AREA	SF	79
FILTRATION RATE	GPM/SF	5
FILTER MEDIA		
UPPER LAYER - TYPE	-	ANTHRACITE
UPPER LAYER - DEPTH	INCHES	12
UPPER LAYER - EFFECTIVE SIZE	MM	0.6 - 0.8
LOWER LAYER - TYPE	-	MANAGESE GREENSAND PLUS
LOWER LAYER - DEPTH	INCHES	18
LOWER LAYER - EFFECTIVE SIZE	MM	0.30 - 0.35
FILTER BACKWASH		
FILTER BACKWASH INTERVAL	DAYS	1
BACKWASH WATER SOURCE	-	TREATED WATER
BACKWASH RATE	GPM/SF	15
BACKWASH DURATION	MINUTES	14
BACKWASH VOLUME (PER CELL)	GALLONS	16,520
BACKWASH VOLUME (TOTAL)	GALLONS	16,520
SURFACE WASH		
SURFACE WASH WATER SOURCE	-	TREATED WATER
SURFACE WASH RATE	GPM/SF	2
SURFACE WASH DURATION	MINUTES	4
SURFACE WASH VOLUME (PER CELL)	GALLONS	630
SURFACE WASH VOLUME (TOTAL)	GALLONS	600
SURFACE WASH PUMP		
NUMBER OF UNITS	NO.	1
TYPE	-	CENTRIFUGAL
DESIGN FLOW RATE	GPM	135
TOTAL DYNAMIC HEAD	FT	70
MOTOR SIZE	HP	5
SPEED CONTROL	-	FIXED SPEED
BACKWASH TANK		
NUMBER OF UNITS	NO.	1
OPERATIONAL VOLUME	GALLONS	60,000

ITEM	UNITS	VALUE
TANK DIAMETER	FT	27
MAXIMUM WATER DEPTH	FT	14.25
REQUIRED FREEBOARD	FT	5.5
TANK SHELL HEIGHT	FT	20
SWW DISCHARGE		
MAX DISCHARGE RATE	GPM	60
TIME TO EMPTY FULL TANK	HOURS	17
CHEMICAL SYSTEMS		
SODIUM HYPOCHLORITE, 12.5%		
DOSE (AVG/MAX)	mg/L	2.0 / 2.5
USE (AVG/MAX)	PPD	24 / 30
FEED PUMP		
TYPE	-	PERISTALTIC
NUMBER OF UNITS	NO.	2 (1 DUTY + 1 STANDBY)
CHEMICAL CONCENTRATION	LBS/GAL	1
FEED RATE (AVG/MAX)	GPH	1.00 / 1.25
MAX PUMP CAPACITY	GPH	1.70
DAY TANK		
NUMBER OF UNITS	NO.	1
STORAGE CAPACITY (PER UNIT)	GALLONS	155
TRANSFER PUMP		
NUMBER OF UNITS	NO.	1
CAPACITY	GPM	18
MOTOR SIZE	HP	1/3
STORAGE TANK		
TYPE	-	TOTE
NUMBER OF UNITS	NO.	1
STORAGE CAPACITY (PER UNIT)	GALLONS	275
SUPPLY AT AVERAGE USE	DAYS	11
FERRIC CHLORIDE, 40%		
DOSE (AVG/MAX)	mg/L	1.0 / 2.0
USE (AVG/MAX)	PPD	12 / 24
FEED PUMP		
TYPE	-	DIAPHRAGM
NUMBER OF UNITS	NO.	2 (1 DUTY + 1 STANDBY)
CHEMICAL CONCENTRATION	LBS/GAL	5
FEED RATE (AVG/MAX)	GPH	0.11 / 0.21
MAX PUMP CAPACITY	GPH	0.35
DAY TANK		
NUMBER OF UNITS	NO.	1
STORAGE CAPACITY (PER UNIT)	GALLONS	30
TRANSFER PUMP		
NUMBER OF UNITS	NO.	1
CAPACITY	GPM	18
MOTOR SIZE	HP	1/3
STORAGE TANK		
TYPE	-	
NUMBER OF UNITS	NO.	1
STORAGE CAPACITY (PER UNIT)	GALLONS	30
SUPPLY AT AVERAGE USE	DAYS	12
AMMONIUM SULFATE, 39%		
DOSE (AVG/MAX)	mg/L	0.4 / 0.5
USE (AVG/MAX)	PPD	4.8 / 6.0
FEED PUMP		
TYPE	-	DIAPHRAGM
NUMBER OF UNITS	NO.	2 (1 DUTY + 1 STANDBY)
CHEMICAL CONCENTRATION	LBS/GAL	1
FEED RATE (AVG/MAX)	GPH	0.24 / 0.30
MAX PUMP CAPACITY	GPH	0.52
DAY TANK		
NUMBER OF UNITS	NO.	1
STORAGE CAPACITY	GALLONS	55
TRANSFER PUMP		
NUMBER OF UNITS	NO.	1
CAPACITY	GPM	18
MOTOR SIZE	HP	1/3
STORAGE TANK		
TYPE	-	DRUM
NUMBER OF UNITS	NO.	1
STORAGE CAPACITY (PER UNIT)	GALLONS	55
SUPPLY AT AVERAGE USE	DAYS	10

WEST YOST
Water. Engineered.
6800 Koll Center Parkway
Suite 150
Pleasanton, CA 94566
(925) 426-2580
FAX (530) 756-5991

Designer Stamp: REGISTERED PROFESSIONAL ENGINEER — No. C60930 Exp. 12-31-26 — CIVIL — STATE OF CALIFORNIA — 2/6/2025

Record Drawings

Designer: _____ Date: _____
Public Works Inspector: _____ Date: _____
Utility/Facility Dept. Head: _____ Date: _____
Project Engineer: _____ Date: _____
Public Improvements Initially Accepted by the City Council on: _____ Res. No. _____

Drawn By: ____ Date: ____
Checked By: ____ Date: ____
Designed By: ____ Date: ____

Revisions

Num.	Description	Engr. Aprv.	Date
1			

CITY OF MILPITAS
ENGINEERING DIVISION

McCANDLESS WELL FACILITY
PROJECT NO. 7076

PROCESS FLOW SCHEMATIC, HYDRAULIC PROFILE, AND DESIGN CRITERIA

RECOMMENDED FOR BIDDING BY: *Lyhak Eam* DATE: 2/7/2025
LYHAK EAM, P.E., Public Works Division Manager – Engineering

DWG NO. G05
PROJECT NO. 7076
Rec. Dwg No.
SCALE: AS SHOWN
SHEET 5 OF 70

N:\Clients\270 City of Milpitas\23-24 McCandless WF\CAD\Production\270301-2322-005.dwg 2-06-25 10:26:33 AM sbarker

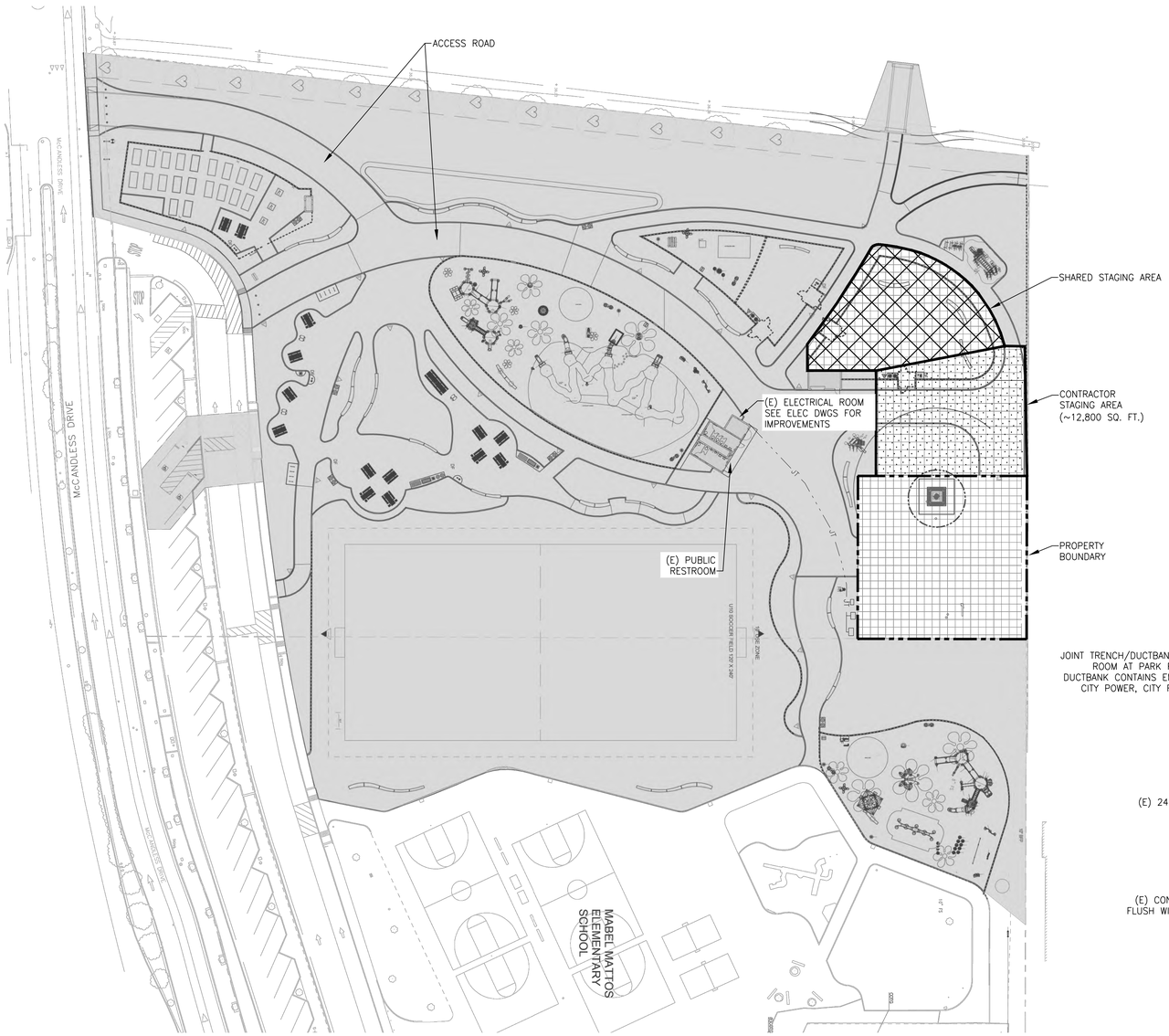

CONTRACT STAGING AREA AND WORK ACCESS PLAN

NOT TO SCALE

N

NOTES

1. THE CONTRACTOR IS RESPONSIBLE FOR REPAIRING ANY AC PAVING, CONCRETE CURBS, CONCRETE WALKS, ETC. THAT ARE DAMAGED DURING CONSTRUCTION OF THE WELL FACILITIES.
2. CONSTRUCTION ACTIVITIES, INCLUDING DUST CONTROL AND STREET SWEEPING, SHALL USE RECYCLED WATER FROM THE CITY'S FILL STATIONS. CONTRACTOR WILL BE REQUIRED TO OBTAIN PERMIT FOR TEMPORARY CONSTRUCTION METER FOR PURCHASE OF RECYCLED WATER.
3. THE WELL FACILITY HAS BEEN ROUGH GRADED TO ELEVATION 37.5.
4. CONTRACTOR MAY USE EXISTING CHAIN LINK PERIMETER FENCING DURING CONSTRUCTION, HOWEVER, SHALL BE RESPONSIBLE FOR ITS REMOVAL UPON PROJECT COMPLETION.
5. CERTAIN PORTIONS OF THE EXISTING SITE, INCLUDING ASPHALT PAVEMENT, CONCRETE MOW BAND, AND DECOMPOSED GRANITE WILL NEED TO BE REMOVED OR MODIFIED BY CONTRACTOR PRIOR TO CONSTRUCTION OF THE WORK.

CONTRACTOR STAGING AREA

STAGING AREA SHARED WITH PARK CONTRACTOR

PROJECT SURVEY CONTROL

VERTICAL DATUM: NAVD88
HORIZONTAL DATUM: NAD83

NOTE:
PROJECT CONTROL POINTS, ELEVATIONS AND LOCATIONS SHOWN IN LIMITS OF WORK AREA ARE BASED ON SURVEY PERFORMED BY KIER & WRIGHT DATED NOVEMBER 6, 2023.

PROJECT BENCHMARK

BENCHMARK NUMBER: 1
COORDINATES: N=4693.357
E=8651.135

ELEVATION: 36.61 FEET

DESCRIPTION: CITY OF MILPITAS BENCHMARK CUT CROSS ON NORTHEAST CORNER OF THE SOUTH CURB ISLAND BETWEEN MCCANDLESS DRIVE AND THE PRIVATE DRIVE FOR MABEL MATTOS ELEMENTARY SCHOOL AT THE INTERSECTION OF MCCANDLESS DRIVE AND DELONG LANE.

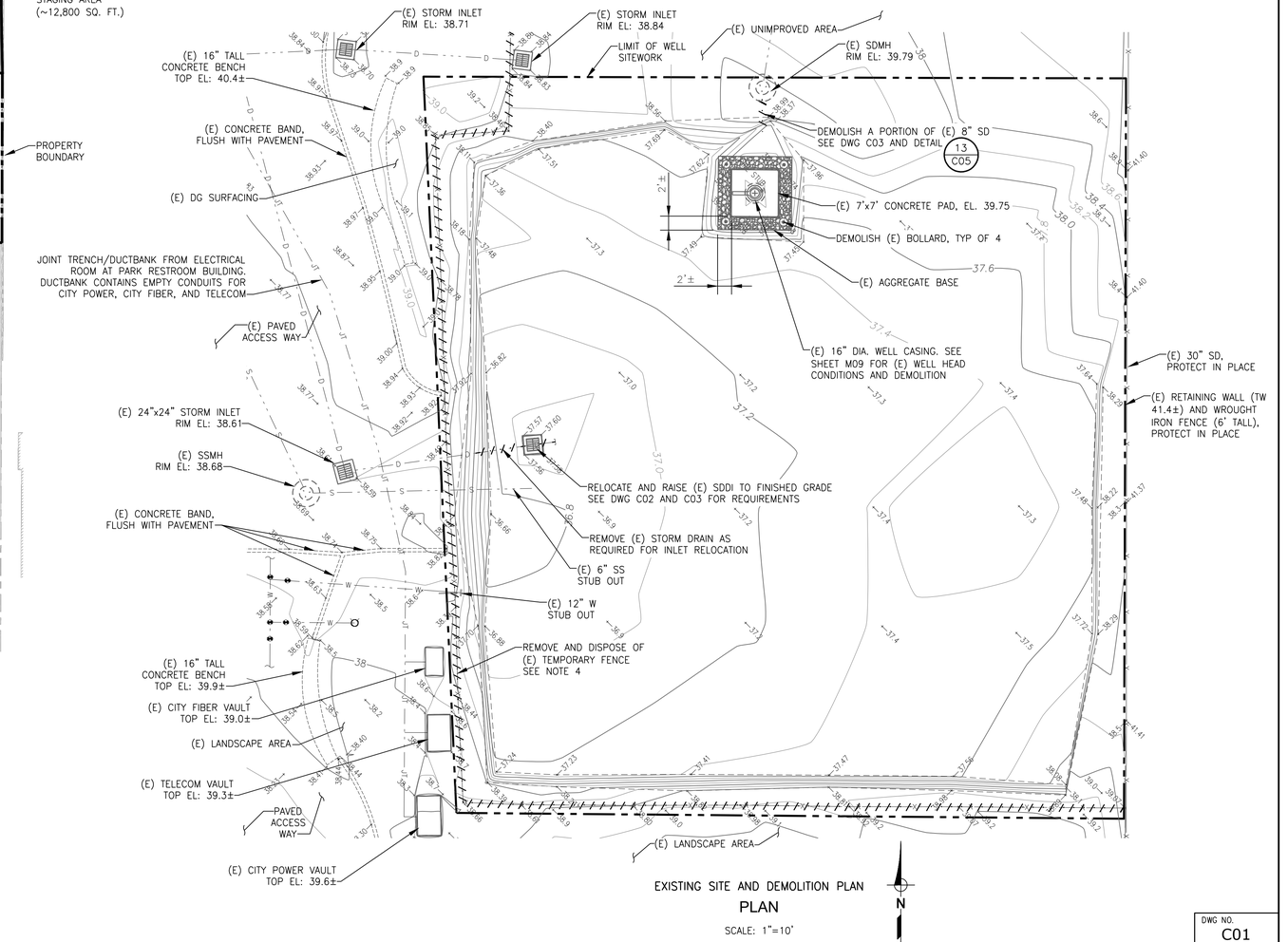

EXISTING SITE AND DEMOLITION PLAN

PLAN

SCALE: 1"=10'

N

WEST YOST
Water. Engineered.

6800 Koll Center Parkway
Suite 150
Pleasanton, CA 94566
(925) 426-2580
FAX (530) 756-5991

Designer Stamp:

REGISTERED PROFESSIONAL ENGINEER — JEFFREY WANG — No. C60930 — Exp. 12-31-26 — CIVIL — STATE OF CALIFORNIA

2/6/2025

Record Drawings

Designer: _____ Date: _____
Public Works Inspector: _____ Date: _____
Utility/Facility Dept. Head: _____ Date: _____
Project Engineer: _____ Date: _____
Public Improvements Initially Accepted by the City Council on: _____ Res. No. _____

Drawn By: ____ Date: ____
Checked By: ____ Date: ____
Designed By: ____ Date: ____

Revisions

Num.	Description	Engr. Aprv.	Date
1			

CITY OF MILPITAS
ENGINEERING DIVISION

McCANDLESS WELL FACILITY
PROJECT NO. 7076

EXISTING CONDITIONS & DEMOLITION PLAN

RECOMMENDED FOR BIDDING BY: Lyhak Eam DATE: 2/7/2025
LYHAK EAM, P.E., Public Works Division Manager – Engineering

DWG NO. C01
PROJECT NO. 7076
Rec. Dwg No.
SCALE: AS SHOWN
SHEET 6 OF 70

\\Cluster\V2\City of Milpitas\30-23-23 McCandless WF\CAD\Production\23023-23323-C01.dwg 2-06-25 10:18:16 AM Stouffer

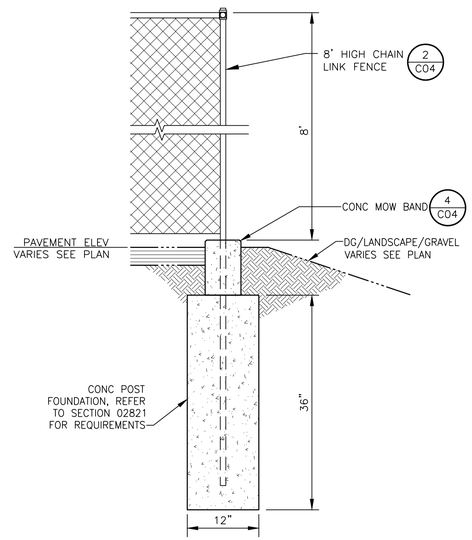

FENCE POST IN MOW BAND

DETAIL 1 / —

NOT TO SCALE

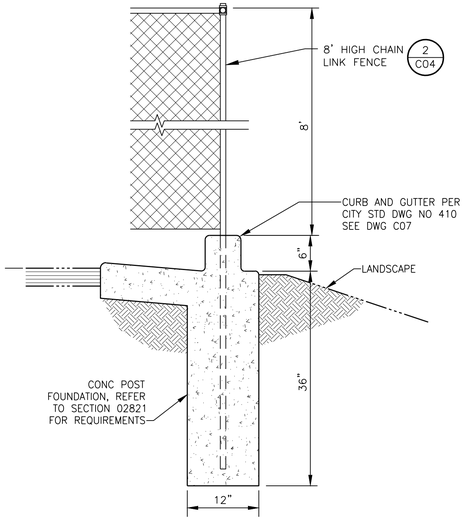

FENCE POST IN CURB AND GUTTER

DETAIL 2 / —

NOT TO SCALE

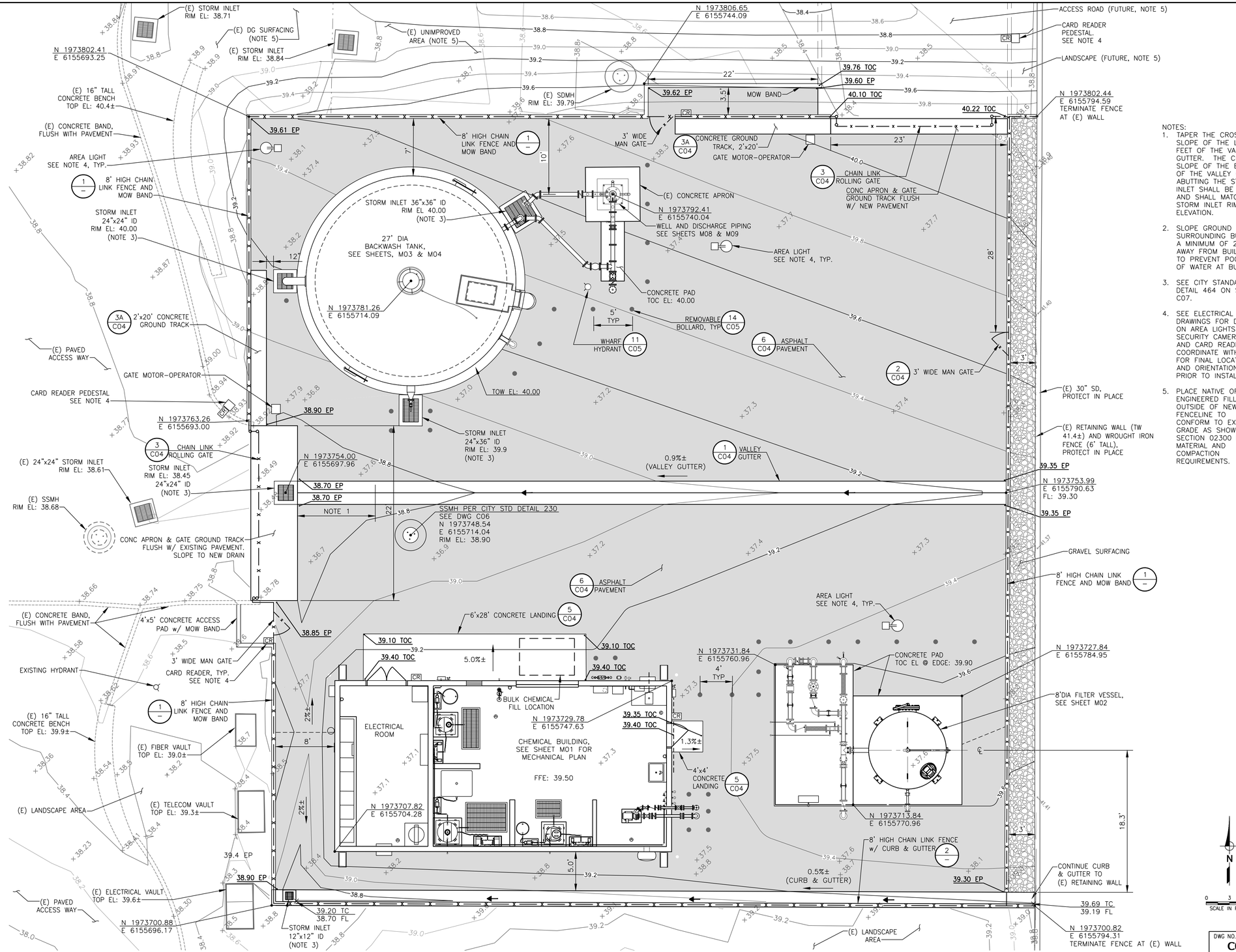

NOTES:

1. TAPER THE CROSS SLOPE OF THE LAST 10 FEET OF THE VALLEY GUTTER. THE CROSS SLOPE OF THE EDGE OF THE VALLEY GUTTER ABUTTING THE STORM INLET SHALL BE FLAT AND SHALL MATCH THE STORM INLET RIM ELEVATION.
2. SLOPE GROUND SURROUNDING BUILDING A MINIMUM OF 2% AWAY FROM BUILDING TO PREVENT POOLING OF WATER AT BUILDING.
3. SEE CITY STANDARD DETAIL 464 ON SHEET C07.
4. SEE ELECTRICAL DRAWINGS FOR DETAILS ON AREA LIGHTS, SECURITY CAMERAS, AND CARD READERS. COORDINATE WITH CITY FOR FINAL LOCATIONS AND ORIENTATIONS PRIOR TO INSTALLATION.
5. PLACE NATIVE OR ENGINEERED FILL OUTSIDE OF NEW FENCELINE TO CONFORM TO EXISTING GRADE AS SHOWN. SEE SECTION 02300 FOR MATERIAL AND COMPACTION REQUIREMENTS.

WEST YOST
Water. Engineered.

6800 Koll Center Parkway
Suite 150
Pleasanton, CA 94566
(925) 426-2580
FAX (530) 756-5991

Designer Stamp:

REGISTERED PROFESSIONAL ENGINEER — Trey Wahlstrom — No. C60930 — Exp. 12-31-26 — STATE OF CALIFORNIA — CIVIL

2/6/2025

Record Drawings

Designer: _____ Date: _____

Public Works Inspector: _____ Date: _____

Utility/Facility Dept. Head: _____ Date: _____

Project Engineer: _____ Date: _____

Public Improvements Initially Accepted by the City Council on: _____ Res. No. _____

Drawn By: ____ Date: _____

Checked By: ____ Date: _____

Designed By: ____ Date: _____

Revisions

Num.	Description	Engr. Aprv.	Date
1			

CITY OF MILPITAS — CALIFORNIA — JANUARY 20, 1954

CITY OF MILPITAS
ENGINEERING DIVISION

McCANDLESS WELL FACILITY
PROJECT NO. 7076

SITE WORK AND GRADING PLAN

RECOMMENDED FOR BIDDING BY: *Lyhak Eam* DATE: 2/7/2025
LYHAK EAM, P.E., Public Works Division Manager – Engineering

DWG NO. C02
PROJECT NO. 7076
Rec. Dwg No.
SCALE: 1"=6'
SHEET 7 OF 70

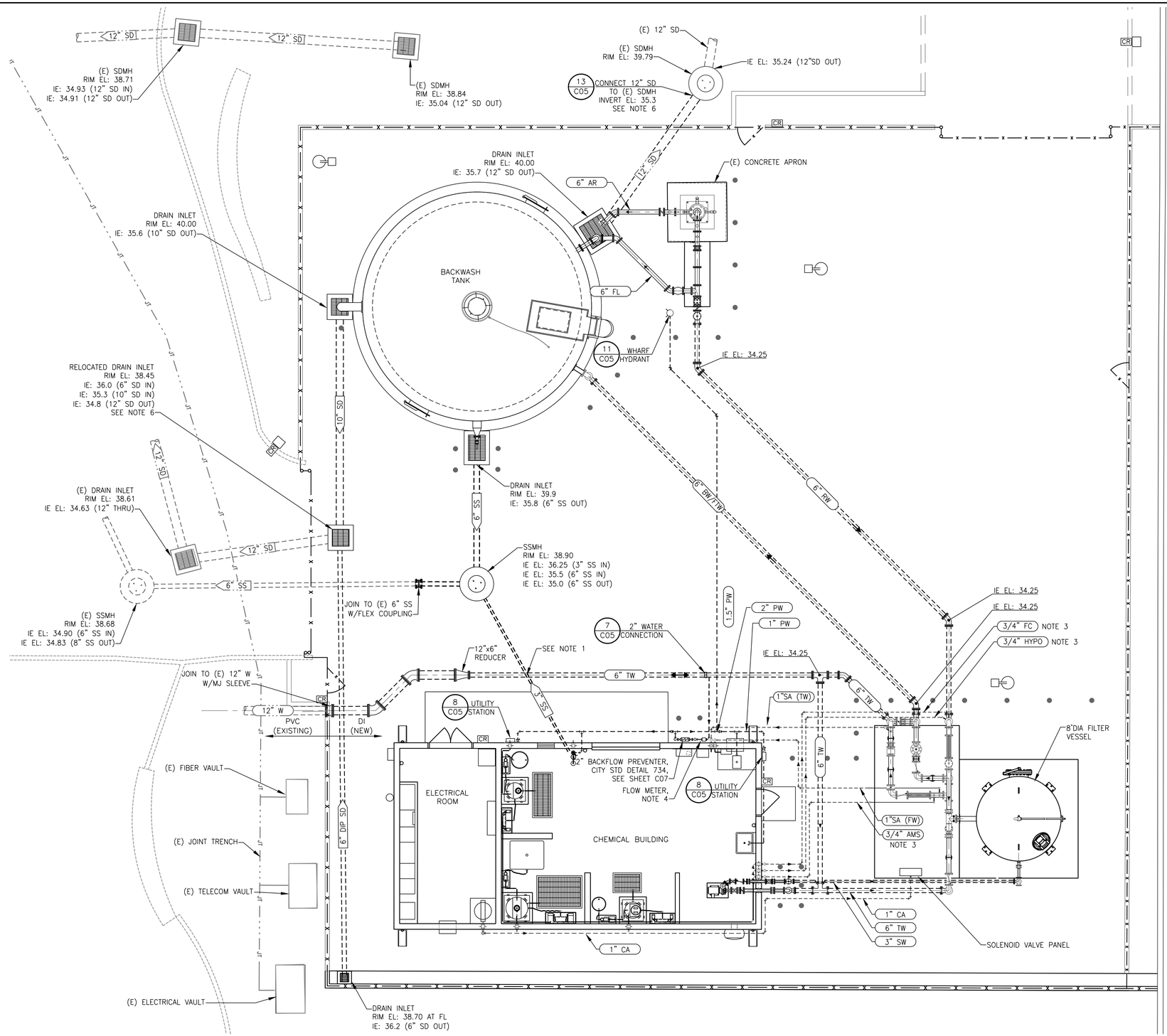

NOTES:

1. NO JOINTS IN WATER PIPE WITHIN 10 FEET OF SS CROSSING. PROVIDE MINIMUM 12 INCH VERTICAL SEPARATION BETWEEN 3" SS AND 6" TW.
2. PROVIDE MINIMUM 3 FEET COVER OVER BURIED PIPELINES.
3. PROVIDE 3" DOUBLE CONTAINMENT PIPING FOR BURIED 3/4" CHEMICAL PIPES.
4. PROVIDE BADGER METER M170 ON 2" PW CONNECTION.
5. REFER TO SECTION 15050 FOR NEW PIPING MATERIALS.
6. REFER TO DRAWING C01 FOR EXISTING CONDITIONS.

WEST YOST
Water. Engineered.
6800 Koll Center Parkway
Suite 150
Pleasanton, CA 94566
(925) 426-2580
FAX (530) 756-5991

Designer Stamp:

REGISTERED PROFESSIONAL ENGINEER
JEFFREY WANZAS
No. C60930
Exp. 12-31-26
CIVIL
STATE OF CALIFORNIA

2/6/2025

Record Drawings

Designer: _____ Date: _____
Public Works Inspector: _____ Date: _____
Utility/Facility Dept. Head: _____ Date: _____
Project Engineer: _____ Date: _____
Public Improvements Initially Accepted by the City Council on: _____ Res. No. _____

Drawn By: _____ Date: _____
Checked By: _____ Date: _____
Designed By: _____ Date: _____

Revisions

Num.	Description	Engr. Aprv.	Date
△			

CITY OF MILPITAS
ENGINEERING DIVISION

McCANDLESS WELL FACILITY
PROJECT NO. 7076

SITE PIPING PLAN

RECOMMENDED FOR BIDDING BY: Lyhak Eam DATE: 2/7/2025
LYHAK EAM, P.E., Public Works Division Manager – Engineering

DWG NO. C03
PROJECT NO. 7076
Rec. Dwg No.
SCALE: 1"=6'
SHEET 8 OF 70

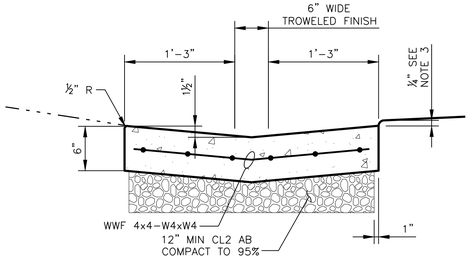

NOTES:
1. EXPANSION JOINTS OF ½" PREMOLDED JOINT FILLER SHALL BE PLACED 50 FOOT SPACING AND WHERE GUTTER BUTTS OTHER CONCRETE STRUCTURES
2. BASE AND SUBGRADE PREPARATION SHALL MATCH ADJACENT PAVING
3. FINISHED AC SHALL MATCH GUTTER WITH ¼" LIP

VALLEY GUTTER
DETAIL 1
NOT TO SCALE

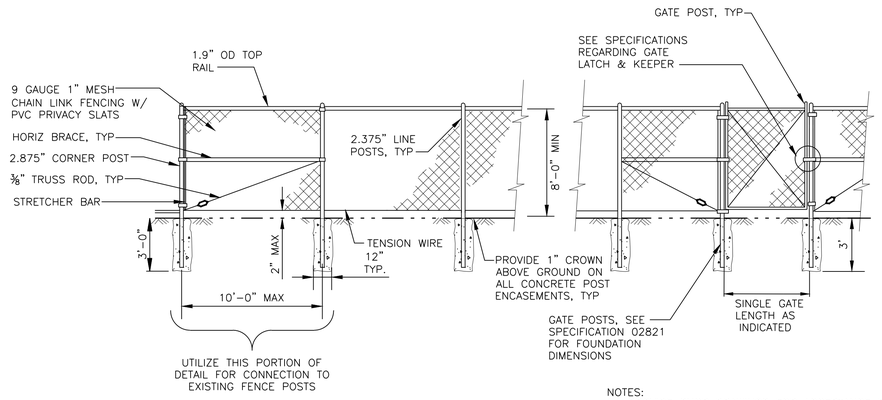

NOTES:
1. PROVIDE SHOP DRAWINGS FOR ACCEPTANCE BY CITY REPRESENTATIVE PRIOR TO FABRICATION.

CHAIN LINK FENCE AND GATE
DETAIL 2
NOT TO SCALE

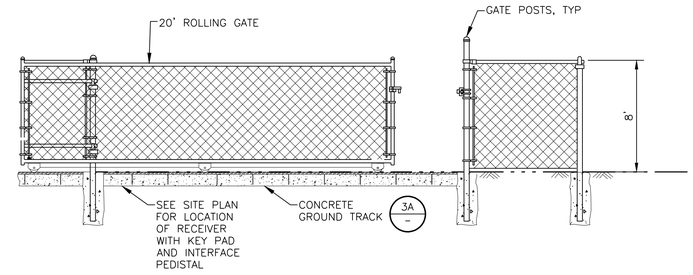

ELECTRICALLY OPERATED 20' CHAIN LINK ROLLING GATE
DETAIL 3
NOT TO SCALE

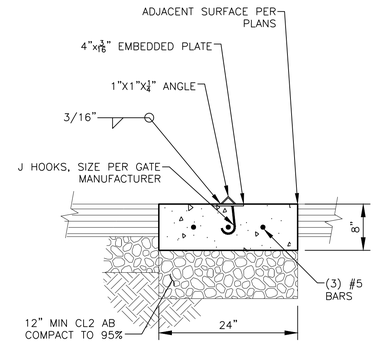

CONCRETE GROUND TRACK
DETAIL 3A
NOT TO SCALE

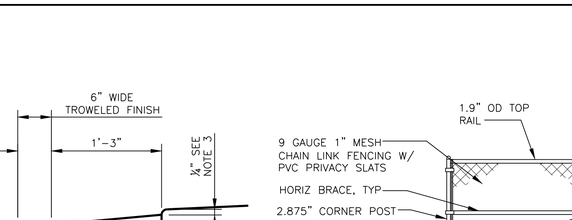

NOTES:
1. INSTALL ¼" EXPANSION JOINTS AT 50' MAX AND ⅜" SCORE LINES AT 5' MAX.
2. CONCRETE TO HAVE LIGHT BROOM FINISH.
3. REFER TO DRAWING C02 FOR LOCATIONS WHERE NEW FENCE IS TO BE CONSTRUCTED IN ALIGNMENT WITH MOW BAND.

CONCRETE MOW BAND
DETAIL 4
NOT TO SCALE

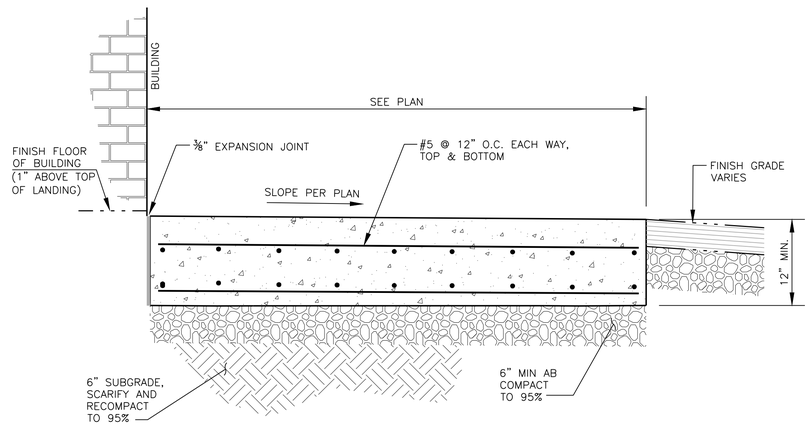

NOTES:
1. PROVIDE ½" ROUND FILLET OR CHAMFER ON ALL EDGES.
2. SURFACE FINISH SHALL BE LIGHT DELAYED BRUSHING, PARALLEL WITH BUILDING WALL.

CONCRETE LANDING
DETAIL 5
NOT TO SCALE

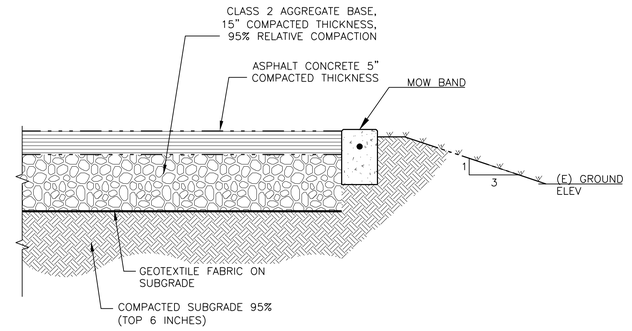

NOTES:
1. ALL PAVEMENT SHALL BE PLACED PER THIS DETAIL UNLESS NOTED OTHERWISE.

ASPHALT PAVEMENT SECTION
DETAIL 6
NOT TO SCALE

WEST YOST
Water. Engineered.
6800 Koll Center Parkway
Suite 150
Pleasanton, CA 94566
(925) 426-2580
FAX (530) 756-5991

Designer Stamp:
REGISTERED PROFESSIONAL ENGINEER
JEFFREY WANG
No. C60930
Exp. 12-31-26
CIVIL
STATE OF CALIFORNIA
2/6/2025

Record Drawings
Designer: _____ Date: _____
Public Works Inspector: _____ Date: _____
Utility/Facility Dept. Head: _____ Date: _____
Project Engineer: _____ Date: _____
Public Improvements Initially Accepted by the City Council on: _____ Res. No. _____

Drawn By: ____ Date: ____
Checked By: ____ Date: ____
Designed By: ____ Date: ____

Revisions

Num.	Description	Engr. Aprv.	Date
1			

CITY OF MILPITAS
CALIFORNIA
JANUARY 26, 1954

CITY OF MILPITAS
ENGINEERING DIVISION
McCANDLESS WELL FACILITY
PROJECT NO. 7076
CIVIL DETAILS 1

RECOMMENDED FOR BIDDING BY: Lyhak Eam DATE: 2/7/2025
LYHAK EAM, P.E., Public Works Division Manager – Engineering

DWG NO. C04
PROJECT NO. 7076
Rec. Dwg No.
SCALE: AS SHOWN
SHEET 9 OF 70

N:\Clients\2970 (City of Milpitas\30-23-22 McCandless WE\CAD\Production\270230-2322-C04-C05.dwg 2:48:25 10/23/25 AM stoltzer

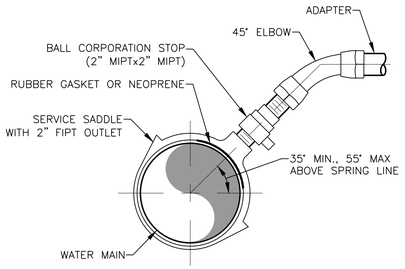

2" WATER CONNECTION

DETAIL 7

NOT TO SCALE

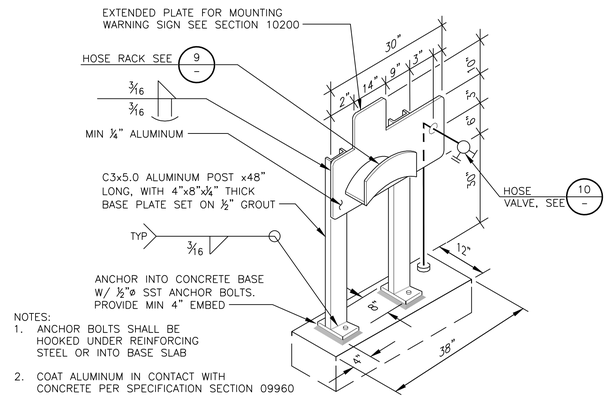

NOTES:
1. ANCHOR BOLTS SHALL BE HOOKED UNDER REINFORCING STEEL OR INTO BASE SLAB
2. COAT ALUMINUM IN CONTACT WITH CONCRETE PER SPECIFICATION SECTION 09960
3. ROUND CORNERS TO REMOVE SHARP EDGES, TYP ALL CORNERS
4. SEE BUILDING ARCHITECTURAL ELEVATIONS ON DRAWING A01 FOR ORIENTATION OF HOSE VALVE RELATIVE TO RACK.

UTILITY STATION

DETAIL 8

NOT TO SCALE

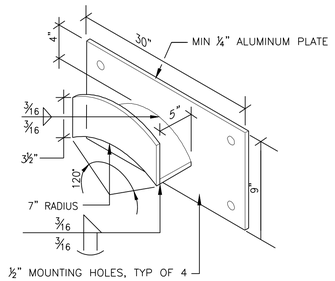

HOSE RACK

DETAIL 9

NOT TO SCALE

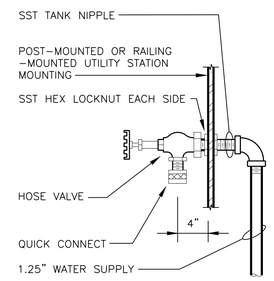

NOTE:
1. SUPPLY ONE 50 FOOT LENGTH OF 1-INCH DIAMETER RUBBER HOSE WITH APPROPRIATE END FITTINGS FOR ATTACHMENT FOR EACH HOSE VALVE OR UTILITY STATION.

HOSE VALVE

DETAIL 10

NOT TO SCALE

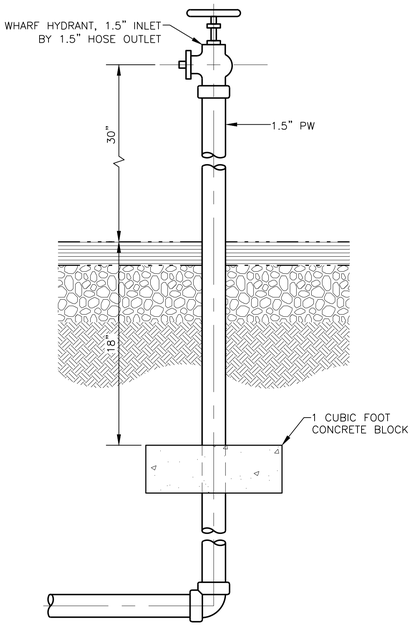

WHARF HYDRANT

DETAIL 11

NOT TO SCALE

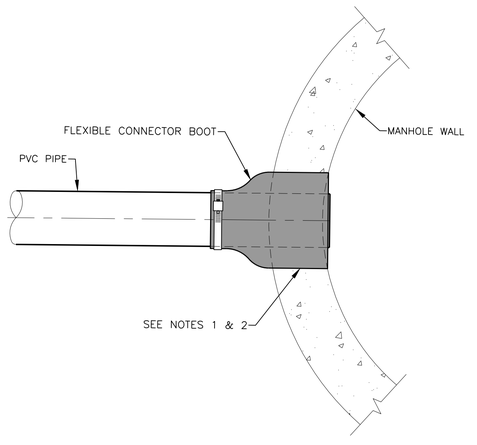

MANHOLE CONNECTION

DETAIL 12

NOT TO SCALE

NOTES:
1. CORE HOLE IN MANHOLE WALL. CORED DIAMETER SHALL BE AS RECOMMENDED BY THE FLEXIBLE CONNECTOR BOOT MANUFACTURER.
2. PREPARE INSIDE SURFACE OF HOLE IN ACCORDANCE WITH THE FLEXIBLE CONNECTOR BOOT MANUFACTURER'S INSTALLATION INSTRUCTIONS.

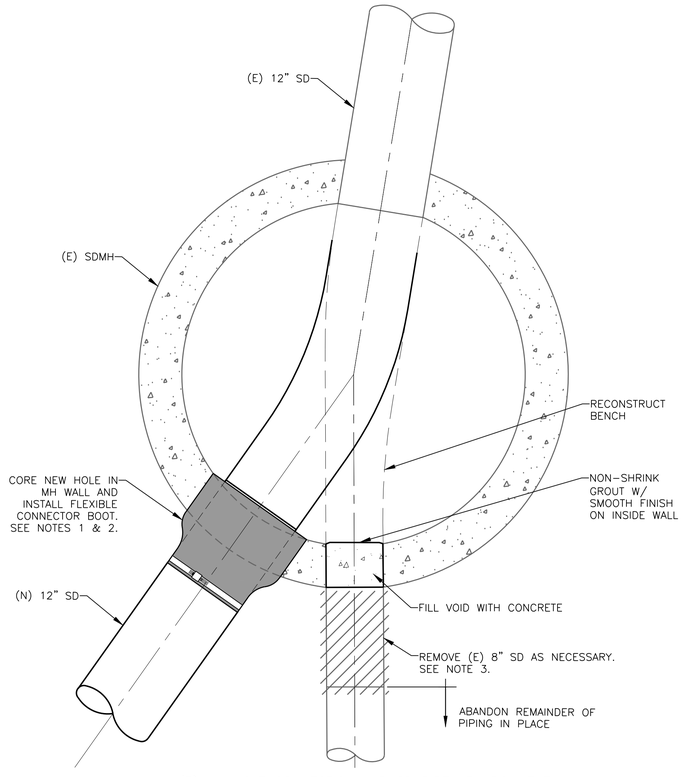

(E) MANHOLE CONNECTION AND SD PIPE ABANDONMENT

DETAIL 13

NOT TO SCALE

NOTES:
1. CORE HOLE IN MANHOLE WALL. CORED DIAMETER SHALL BE AS RECOMMENDED BY THE FLEXIBLE CONNECTOR BOOT MANUFACTURER.
2. PREPARE INSIDE SURFACE OF HOLE IN ACCORDANCE WITH THE FLEXIBLE CONNECTOR BOOT MANUFACTURER'S INSTALLATION INSTRUCTIONS.
3. CONTRACTOR SHALL DETERMINE EXTENTS OF 8" STORM DRAIN OUTSIDE OF MH AND COORDINATE WITH CITY REGARDING REMOVAL AND/OR ABANDONMENT.

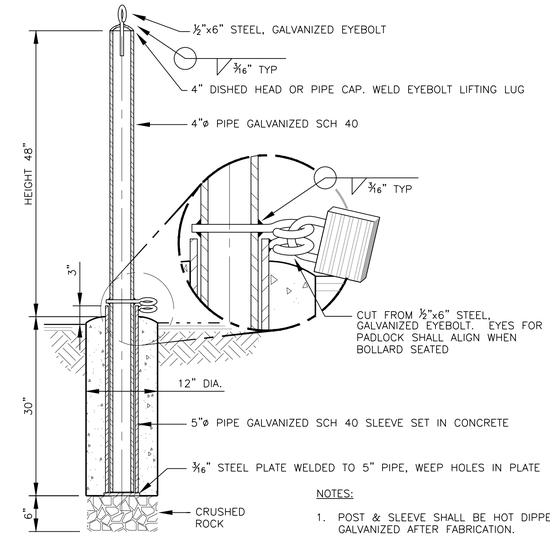

NOTES:
1. POST & SLEEVE SHALL BE HOT DIPPED GALVANIZED AFTER FABRICATION.
2. POST TO BE REMOVABLE FROM SLEEVE.
3. POST TO BE HOLLOW.

REMOVABLE BOLLARD

DETAIL 14

NOT TO SCALE

WEST YOST
Water. Engineered.

6800 Koll Center Parkway
Suite 150
Pleasanton, CA 94566
(925) 426-2580
FAX (530) 756-5991

Designer Stamp:

REGISTERED PROFESSIONAL ENGINEER
JEFFREY WANTA
No. C60930
Exp. 12-31-26
CIVIL
STATE OF CALIFORNIA

2/6/2025

Record Drawings

Designer: _____ Date: _____

Public Works Inspector: _____ Date: _____

Utility/Facility Dept. Head: _____ Date: _____

Project Engineer: _____ Date: _____

Public Improvements Initially Accepted by the City Council on: _____ Res. No. _____

Drawn By: ____ Date: ____

Checked By: ____ Date: ____

Designed By: ____ Date: ____

Revisions

Num.	Description	Engr. Aprv.	Date
1			

CITY OF MILPITAS
CALIFORNIA
JANUARY 20, 1954

CITY OF MILPITAS
ENGINEERING DIVISION

McCANDLESS WELL FACILITY
PROJECT NO. 7076

CIVIL DETAILS 2

RECOMMENDED FOR BIDDING BY: *Lyhak Eam* DATE: 2/7/2025
LYHAK EAM, P.E., Public Works Division Manager – Engineering

DWG NO. C05
PROJECT NO. 7076
Rec. Dwg No.
SCALE: AS SHOWN
SHEET 10 OF 70

\\Client\V270 City of Milpitas\V0-23-22 McCandless WF\CAD\Production\V2703D-2322-C04-C05.dwg 2-06-25 10:27:48 AM steveter

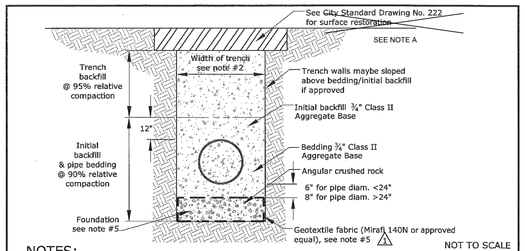

NOT TO SCALE

NOTES:

1. This detail applies to all pipes 4" nominal diameter and greater.
2. Trench width shall not be more than 18" wider than the largest outside diameter of the pipe. There shall be a minimum of 6" clearance between the pipe and trench wall on either side of the pipe outside diameter.
3. Trench bedding and backfill material shall be ¾" Class II Aggregate Base (AB) in accordance with Caltrans standard specifications, latest edition. Native material, sand or "pea gravel" type materials are not permitted as trench backfill.
4. Backfill compaction requirements for Class II Aggregate Base (AB) trench backfill shall be:
   A. 95% relative compaction within street Right-of -Way as determined by ASTM designation D1557-91.
   B. 90% relative compaction outside street Right-of-Way as determined by ASTM designation D1557-91.
   C. Compaction by water ponding or jetting is not permitted.
5. Where groundwater or unstable soil is encountered, trench shall be over excavated of unstable soils. Mirafi 140N or equal stabilization fabric shall be placed onto the exposed subgrade and back filled with approximately 18 inches of ½" - ¾" angular crushed rock or larger rocks as necessary to form a stable foundation or equivalent. Stabilization fabric shall be wrapped around crushed rock as indicated in detail above.
6. Trenches shall not be left open overnight. All trenches shall be backfilled by the end of the work period. The exceptions are trenches of less than a pipe length at special locations such as the connection point for the next day's work, a freshly poured manhole base, crossing with a waterline that is being pressure tested or other conditions deemed by the engineer where it can be plated. The trench must be sheeted, braced, or shored in (in compliance with CAL/OSHA requirements for excavations and trenches) in addition to the plating (traffic rated in streets/driveways). No trench shall be left with lip depression greater than one inch in the traffic area.
7. When city water, sewer, or storm drain lines are constructed in easements between or adjacent to subdivision lots, a two inch slab of 4 sack portland cement and separation material shall be place on top of bedding material for the entire length and width of the trench.
8. Prior to construction, a permit for construction must be obtained from Engineering Division.

CITY OF MILPITAS, ENGINEERING DIVISION			STANDARD DRAWING
REVISION	DATE	TRENCH CONSTRUCTION	NO. 220
1	2016	APPROVED BY: Greg Chung	DATE : 11/09/16
		PUBLIC WORKS DIRECTOR / CITY ENGINEER	SHEET 1 OF 2

NOTES:

A. ASPHALT CONCRETE PAVEMENT (PER DETAIL 5/C04) EXCEPT WHERE PIPE CROSSES UNDER VALLEY GUTTER (DETAIL 1/C04).

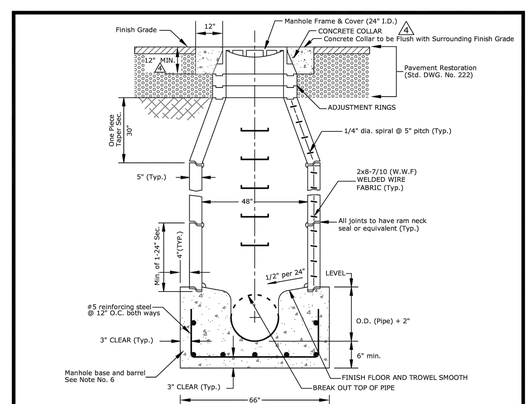

CONCENTRIC MANHOLE

NOTE:

1. P.C.C. shall be Class "A", with minimum compressive strength of 3,000 psi at 28 days, per State Specification Section 51 (Cement Type V).
2. Where manhole is constructed in easement or other non street location, manhole frame and cover shall be 6" above ground elevation.
3. Eccentric manhole is preferred over concentric manhole.
4. All manholes are to be constructed watertight.
5. For sanitary sewer manhole, steps shall be placed 13" O.C. from bottom to top. Copolymer polypropylene plastic coated 1/2" grade 60 steel reinforcement by MA industries PS2-PF or approved equal shall be used. Steps are not to be installed in storm drain manhole.
6. Precast manhole base and barrel shall conform to State Specification Section 70 or approved equal. All castings for manholes, such as rings and covers, shall possess a tensile strength of not less than 16,000 psi.

NOT TO SCALE

CITY OF MILPITAS, ENGINEERING DIVISION			STANDARD DRAWING
REVISION	DATE	SANITARY AND STORM MANHOLE	NO. 230
1	1958		
2	2001		DATE: Rev. 5/12/21
3	2010	APPROVED BY: Steven Erickson June 21, 2021	
4	2021	ENGINEERING DIRECTOR / CITY ENGINEER RCE No. C57242	SHEET 1 OF 3

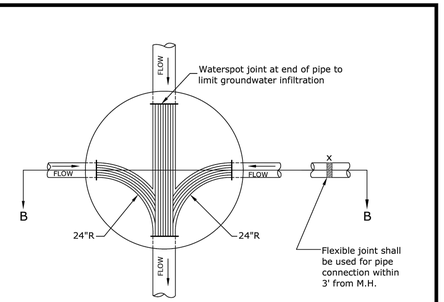

MANHOLE BASE

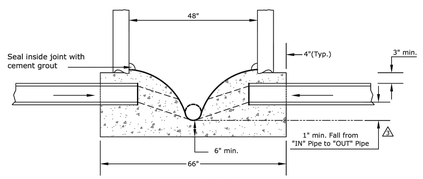

SECTION B-B

NOT TO SCALE

CITY OF MILPITAS, ENGINEERING DIVISION			STANDARD DRAWING
REVISION	DATE	SANITARY AND STORM MANHOLE	NO. 230
1	1958		
2	2001		DATE Rev. 5/12/21
3	2010	APPROVED BY: Steven Erickson June 21, 2021	
4	2021	ENGINEERING DIRECTOR / CITY ENGINEER RCE No. C57242	SHEET 3 OF 3

WEST YOST
Water. Engineered.
6800 Koll Center Parkway
Suite 150
Pleasanton, CA 94566
(925) 426-2580
FAX (530) 756-5991

Designer Stamp:

REGISTERED PROFESSIONAL ENGINEER — JEFFREY WANG — No. C60930 Exp. 12-31-26 — CIVIL — STATE OF CALIFORNIA

2/6/2025

Record Drawings

Designer: _____ Date: _____

Public Works Inspector: _____ Date: _____

Utility/Facility Dept. Head: _____ Date: _____

Project Engineer: _____ Date: _____

Public Improvements Initially Accepted by the City Council on: _____ Res. No. _____

Drawn By: ____ Date: ____

Checked By: ____ Date: ____

Designed By: ____ Date: ____

Revisions

Num.	Description	Engr. Aprv.	Date
1			

CITY OF MILPITAS
ENGINEERING DIVISION

McCANDLESS WELL FACILITY
PROJECT NO. 7076

CIVIL DETAILS 3

RECOMMENDED FOR BIDDING BY: Lyhak Eam DATE: 2/7/2025
LYHAK EAM, P.E., Public Works Division Manager – Engineering

DWG NO. C06
PROJECT NO. 7076
Rec. Dwg No.
SCALE: AS SHOWN
SHEET 11 OF 70

S:\Clients\2700 City of Milpitas\30-23-22 McCandless WF\CAD\Production\27030-23225-C06-C07.dwg 2-06-25 10:23:34 AM rbarker

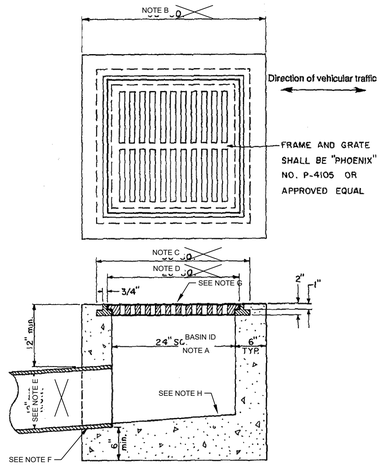

SECTION THROUGH BASIN *

*Or approved pre-cast.

NOTES:

A. SEE PLANS FOR BASIN INSIDE DIMENSIONS (ID).

B. BASIN ID+12 INCHES.

C. BASIN ID+6 INCHES.

D. BASIN ID+2 INCHES.

E. SEE PLANS FOR PIPE SIZES.

F. PROVIDE FLEXIBLE PIPE CONNECTOR BOOT, SPECIFICALLY MANUFACTURED FOR THE INTENDED SERVICE, TO CONNECT PIPE TO MANHOLE.

G. UNLESS OTHERWISE NOTED, SET GRATE ELEVATION 0.1 FOOT ABOVE FINISHED GRADE.

H. USE GROUT FILL TO CHANNELIZE FLOW TOWARDS OUTLET.

CITY OF MILPITAS, ENGINEERING DIVISION			STANDARD DRAWING
REVISION	DATE	FLAT GRATE STORM INLET	NO. 464
1	1997		DATE : 6/15/10
2	2001		
3	2010	APPROVED BY: 3 PUBLIC WORKS DIRECTOR / CITY ENGINEER RCE No.40283	SHEET 1 OF 1

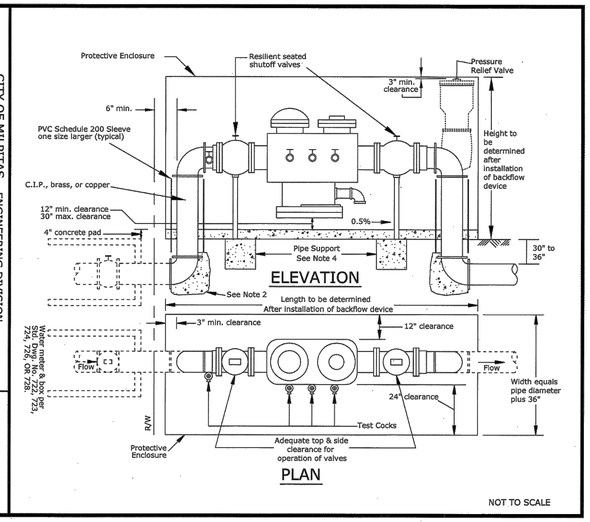

CITY OF MILPITAS, ENGINEERING DIVISION			STANDARD DRAWING
REVISION	DATE	REDUCED PRESSURE PRINCIPAL BACKFLOW PREVENTER	NO. 734
1	1997		DATE : 6/15/10
2	2001		
3	2010	APPROVED BY: 3 PUBLIC WORKS DIRECTOR / CITY ENGINEER RCE No. 40283	SHEET 1 OF 2

NOTES:

1. The reduce pressure principal assembly shall be per City approved equal list. The size and model of the backflow preventer shall be determined for each installation. The entire assembly including the resilient seated shutoff valves and the test cocks shall be provided as a complete unit.
2. The thrust blocks shall be required per Standard Drawing No. 704 for 4 inch diameter pipe and larger. All ring-tite or flexible pipe with a diameter smaller than 4 inch shall require thrust blocks per City Engineer approval.
3. A protective enclosure, model BPE-200R by Pipeline Products or approved equal shall be installed.
4. All backflow preventers 2 inch or larger diameter shall be supported by stainless steel pipe saddle brace with 4 inch thick, 12 inch square concrete footing per City Approved equal list.
5. A secondary pressure relief valve shall be installed behind the reduced pressure principal backflow preventer installed on existing water services, serving water heaters or boilers without secondary thermal expansion relief devices. The secondary relief valve shall be a "Listed" device that has been listed by a nationally recognized testing laboratory or as approved by the Building Division. The secondary relief valve shall have a setting at or below the maximum working pressure of the water heater device and shall be inspected by the building inspector.
6. All backflow preventers must be tested by a certified backflow prevention device tester. A test and maintenance report for the backflow device must be received by the City prior to acceptance of public improvements, permit issuance or occupancy as determined by the City Engineer.
7. Threaded installations shall include one three-part union.
8. The installation is required by Title 17 of the California Administrative Code, the Department of Public Health, Recommendations and Ordinance No. 232 of the City of Milpitas.
9. The protective enclosure shall be in accordance with Standard Drawing No. 741.
10. Install reduced pressure principle backflow preventer as shown on City Standard Drawing No. 734 when any of the following conditions exist.

a. When serving more than two (2) dwelling units.
b. To separate potable water supply from irrigation system.
c. When Recycled water connection serves the site.
d. When Recycled water irrigation system has permanent plumbing connection to chemical feed.
e. When any potable water service has permanent plumbing connection to pumps, injectors and tanks.

CITY OF MILPITAS, ENGINEERING DIVISION			STANDARD DRAWING
REVISION	DATE	REDUCED PRESSURE PRINCIPAL BACKFLOW PREVENTER	NO. 734
1	1997		DATE : 6/15/10
2	2001		
3	2010	APPROVED BY: 3 PUBLIC WORKS DIRECTOR / CITY ENGINEER RCE No. 40283	SHEET 2 OF 2

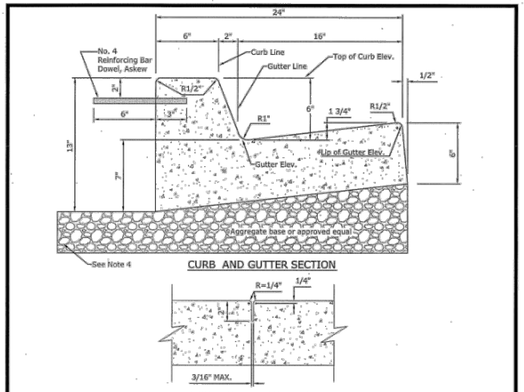

CURB AND GUTTER SECTION

WEAKENED PLANE JOINT

NOTES:

1. Use Portland Cement Concrete containing not less than 564 lbs. of Type I or I/II Portland Cement per cubic yard with a compressive strength of not less than 3000 psi. at 28 days, with a medium broom finish.
2. Dowels shall be used only when the curb is constructed before the contiguous sidewalk (Std. Drawing No's. 425, 426, and 427) and when jointing new curb and gutter to existing concrete curb. Bar spacing shall be 1' each side of the weakened plane joint and on 5' 6" max. centers.
3. Weakened Plane Joints shall be constructed at ends of curb returns, curb inlets, other structures and at 12' intervals except in driveway sections. Joints shall match adjacent improvements.
4. Aggregate base thickness shall be 6" or shall be determined by the extension of the subbase line under the curb, whichever is greater.
5. For curb & gutter replacement; A 1'x1' wdge-cut

NOT TO SCALE

CITY OF MILPITAS, ENGINEERING DIVISION			STANDARD DRAWING
REVISION	DATE	CURB AND GUTTER	NO. 410
1	1991		DATE : 6/15/10
2	2001		
3	2010	APPROVED BY: 3 PUBLIC WORKS DIRECTOR / CITY ENGINEER RCE No. 40283	SHEET 1 OF 1

WEST YOST
Water. Engineered.
6800 Koll Center Parkway
Suite 150
Pleasanton, CA 94566
(925) 426-2580
FAX (530) 756-5991

Designer Stamp: REGISTERED PROFESSIONAL ENGINEER JEFFREY WANG No. C60930 Exp. 12-31-26 CIVIL STATE OF CALIFORNIA
2/6/2025

Record Drawings

Designer: _____ Date: _____
Public Works Inspector: _____ Date: _____
Utility/Facility Dept. Head: _____ Date: _____
Project Engineer: _____ Date: _____
Public Improvements Initially Accepted by the City Council on: _____ Res. No. _____

Drawn By: ____ Date: _____
Checked By: ____ Date: _____
Designed By: ____ Date: _____

Revisions

Num.	Description	Engr. Aprv.	Date
1			

CITY OF MILPITAS
ENGINEERING DIVISION

McCANDLESS WELL FACILITY
PROJECT NO. 7076

CIVIL DETAILS 4

RECOMMENDED FOR BIDDING BY: Lyhak Eam DATE: 2/7/2025
LYHAK EAM, P.E., Public Works Division Manager – Engineering

DWG NO. C07
PROJECT NO. 7076
Rec. Dwg No.
SCALE: AS SHOWN
SHEET 12 OF 70

I:\Clients\2970 City of Milpitas\30-23-22 McCandless WCS\CAD\Production\27030-23222-4D05-C07.dwg 2-06-25 10:24:05 AM stephen

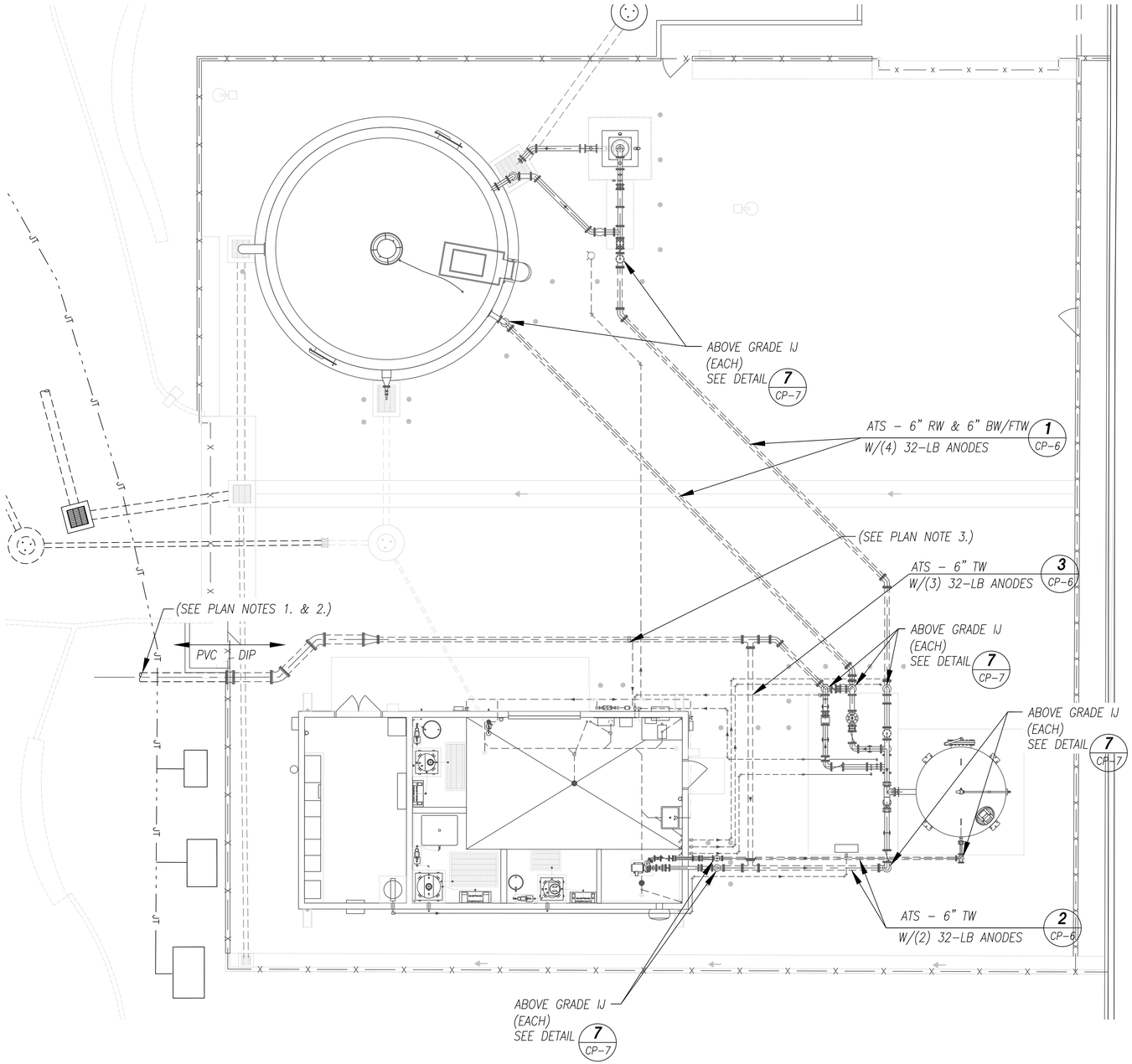

PLAN NOTES:

1. AT CONNECTION INSTALL (1) 32-LB ANODE & TEST STATION PER DETAIL 4/CP-6.
2. INSTALL A 32 POUND ANODE ON ANY BURIED VERTICAL OR HORIZONTAL ELBOWS UTILIZED BUT NOT SHOWN ON THE CATHODIC PROTECTION SITE PLAN ON SHEET CP-1. CONNECT ANODE DIRECTLY TO FITTING.
3. INSTALL INSULATING CORP STOP AT COPPER-TO-DUCTILE IRON PIPE CONNECTIONS.

1 / CP-1 **CATHODIC PROTECTION SITE PLAN - YARD PIPING**
NOT TO SCALE

CATHODIC PROTECTION GENERAL NOTES

I. UNDERGROUND PIPING:

1. THE PIPELINES WHICH ARE THE SUBJECT OF THIS CATHODIC PROTECTION SYSTEM ARE THE BURIED DUCTILE IRON VALVES AND FITTINGS ON THE PRESSURIZED WATER SERVICE PIPELINES. ALL BURIED BOLTS, NUTS & WASHERS SHALL BE COATED WITH BITUMASTIC. ALL BURIED DUCTILE IRON PIPE & FITTINGS SHALL BE WRAPPED WITH 8-MIL POLYETHYLENE IN ACCORDANCE WITH AWWA C-105.
2. CATHODIC PROTECTION FOR THE DUCTILE IRON FITTINGS & PIPE SHALL CONSIST OF PREPACKAGED MAGNESIUM ANODES INSTALLED ON ALL BURIED METALLIC FITTINGS. THE ANODE SIZE IS INDICATED IN THE CATHODIC PROTECTION SITE PLAN ON SHEET CP-1.
3. ALL BURIED, NON-WELDED, NON-INSULATING JOINTS SHALL BE BONDED WITH ONE, #8 AWG/HMWPE INSULATED COPPER CABLES FOR ELECTRICAL CONTINUITY OF THE DUCTILE IRON FITTINGS.
4. THE NEW PIPELINES AND FITTINGS SHALL BE ELECTRICALLY ISOLATED FROM ALL EXISTING METALLIC STRUCTURES, SUCH AS REBAR, COPPER PIPE, GROUNDING CLAMPS, EXISTING PIPE, TRACER WIRES, ETC. ALL COPPER TRACER WIRE SHALL HAVE PLASTIC INSULATION. INSULATING JOINTS SHALL BE INSTALLED AT ALL CONNECTIONS TO EXISTING AND/OR OFFSITE METALLIC PIPELINES. DIELECTRIC INSULATING FLANGE KITS SHALL BE INSTALLED ON FERROUS METAL RISERS.
5. TEST STATIONS ARE REQUIRED FOR ANODE LOCATIONS ON ALL RISERS & VALVES. HOWEVER TEST STATIONS ARE NOT REQUIRED ON ISOLATED ELBOWS OR TEES, AND ANODES SHALL BE CONNECTED DIRECTLY TO THESE FITTINGS AS SHOWN.
6. ALL ANODES INSTALLED SHALL BE DOCUMENTED AND REPORT PROVIDED TO THE ENGINEER.
7. AFTER COMPLETION THE SYSTEM SHALL BE TESTED BY A REGISTERED CORROSION ENGINEER. PLEASE CALL JDH CORROSION CONSULTANTS, INC. AT (925) 927-6630.

II. BACKWASH TANK:

1. THE CATHODIC PROTECTION SYSTEM FOR THE SUBMERGED SURFACES OF THE INTERIOR WALLS, AND FLOOR OF THE BACKWASH TANK SHALL CONSIST OF THREE (3) NEW 3.25-INCH DIAMETER HIGH POTENTIAL MAGNESIUM ROD ANODES AND ONE NEW REFERENCE ELECTRODE, WHICH ARE ALL SUSPENDED FROM THE ROOF OF THE TANK. EACH ANODE SHALL BE 10 FEET LONG.
2. CONTRACTOR SHALL PROVIDE THE FOLLOWING SERVICES:
   - COORDINATE THEIR WORK WITH THE COATINGS CONTRACTOR.
   - INSTALL THREE (3) ANODE ACCESS HAND HOLES IN THE LOCATIONS SHOWN IN THE CATHODIC PROTECTION SITE PLAN BEFORE THE TANK'S INTERIOR IS COATED.
   - INSTALL ONE (1) REFERENCE ELECTRODE ACCESS HAND HOLE IN THE LOCATION SHOWN ON THE SITE PLAN BEFORE THE TANK'S INTERIOR IS COATED.
   - INSTALL ONE (1) 1" NPT COUPLING ON TANK ROOF NEXT TO HATCH, CONDUIT FROM ROOF TO TEST STATION, AND MOUNTING FOR ANODE TEST STATION IN THE LOCATION SHOWN ON THE SITE PLAN BEFORE THE TANK'S INTERIOR & EXTERIOR ARE COATED.
   - INSTALL ONE (1) REFERENCE ELECTRODE AND CABLES IN CONDUIT FROM ANODE TEST STATION TO COUPLING ON TANK ROOF NEXT TO HATCH, ONE (1) ANODE TEST STATION, THREE (3) ANODES & AND ASSOCIATED ANODE HEADER CABLES, FOUR (4) STAINLESS STEEL ACCESS HOLE COVERS, EIGHT (8) STAINLESS STEEL CLEVIS PIN CABLE SUPPORTS, AND SUPPLY AND INSTALLATION OF THE CATHODIC PROTECTION MATERIALS AS PER THE SPECIFICATIONS AND DRAWINGS.
3. THE LOCATIONS OF ROOF RAFTERS HAVE NOT BEEN CONFIRMED. THE CONTRACTOR SHALL VERIFY RAFTER LOCATIONS AND ENSURE THAT NO RAFTERS ARE DAMAGED DURING THE INSTALLATION OF THE ANODE ACCESS HOLES AND THE REFERENCE ELECTRODE ACCESS HOLE.
4. MECHANICALLY CUT THE FOUR (4) ACCESS HOLES PRIOR TO COATING THE INTERIOR OF THE TANK. AFTER CUTTING THE HOLE IN THE ROOF, BURRS AND SHARP EDGES OF THE HOLE SHALL BE REMOVED BY GRINDING. THE EXPOSED METAL SHALL BE TOUCHED UP WITH A COATING THAT IS COMPATIBLE WITH THE NEW COATING SYSTEM. ALL WORK SHALL BE CONDUCTED IN ACCORDANCE WITH INDUSTRY STANDARDS FOR MAINTAINING CLEANLINESS INSIDE THE TANK, AND DISINFECTION SHALL PROCEED AS DESCRIBED IN THE SPECIFICATIONS.
5. ANY DAMAGED COATING ON THE TANK EXTERIOR CAUSED BY THE INSTALLATION SHALL BE TOUCHED UP WITH A COATING THAT IS COMPATIBLE WITH THE NEW COATING ACCORDING TO COATINGS SPECIFICATION.
6. ALL MATERIALS IN CONTACT WITH THE WATER SUPPLY SHALL MEET NSF 61 STANDARDS.
7. ELECTRICALLY ISOLATE THE STAINLESS STEEL LADDER FROM THE TANK INTERIOR.
8. THE SYSTEM SHALL BE WARRANTIED FOR ALL MATERIAL AND WORKMANSHIP FOR 1 YEAR FROM DATE OF SYSTEM PERMANENT COMMISSIONING.
9. AFTER COMPLETION THE SYSTEM SHALL BE TESTED BY A REGISTERED CORROSION ENGINEER. PLEASE CALL JDH CORROSION CONSULTANTS, INC. AT (925) 927-6630.

jdh corrosion consultants, inc.
1100 Willow Pass Court Concord, CA 94520
(925)927-6630 FAX (925)927-6634
WWW.JDHCORROSION.COM

Designer Stamp: REGISTERED PROFESSIONAL ENGINEER MOHAMMED ALI No. CR 1035 Exp. June 30, 2025 CORROSION STATE OF CALIFORNIA

Record Drawings

Designer: _____ Date: _____
Public Works Inspector: _____ Date: _____
Utility/Facility Dept. Head: _____ Date: _____
Project Engineer: _____ Date: _____
Public Improvements Initially Accepted by the City Council on: _____ Res. No. _____

Drawn By: DJA Date: 8/15/24
Checked By: JDH Date: 8/15/24
Designed By: JAW Date: 8/15/24

Revisions

Num.	Description	Engr. Aprv.	Date
1			

CITY OF MILPITAS
ENGINEERING DIVISION

McCANDLESS WELL FACILITY
PROJECT NO. 7076

YARD PIPING CATHODIC PROTECTION PLAN & NOTES

RECOMMENDED FOR BIDDING BY: Lyhak Eam DATE: 2/7/2025
LYHAK EAM, P.E., Public Works Division Manager – Engineering

DWG NO. CP-1
PROJECT NO. 7076
Rec. Dwg No.
SCALE: AS SHOWN
SHEET 13 OF 70

J:\Project Folders\2018 Contracts\18182 - West Yost - TO 49 - Milpitas McCandless Well Construction\Design\CP McCandless Rev6.15.dwg 2-06-25 04:00:57 PM jahalen

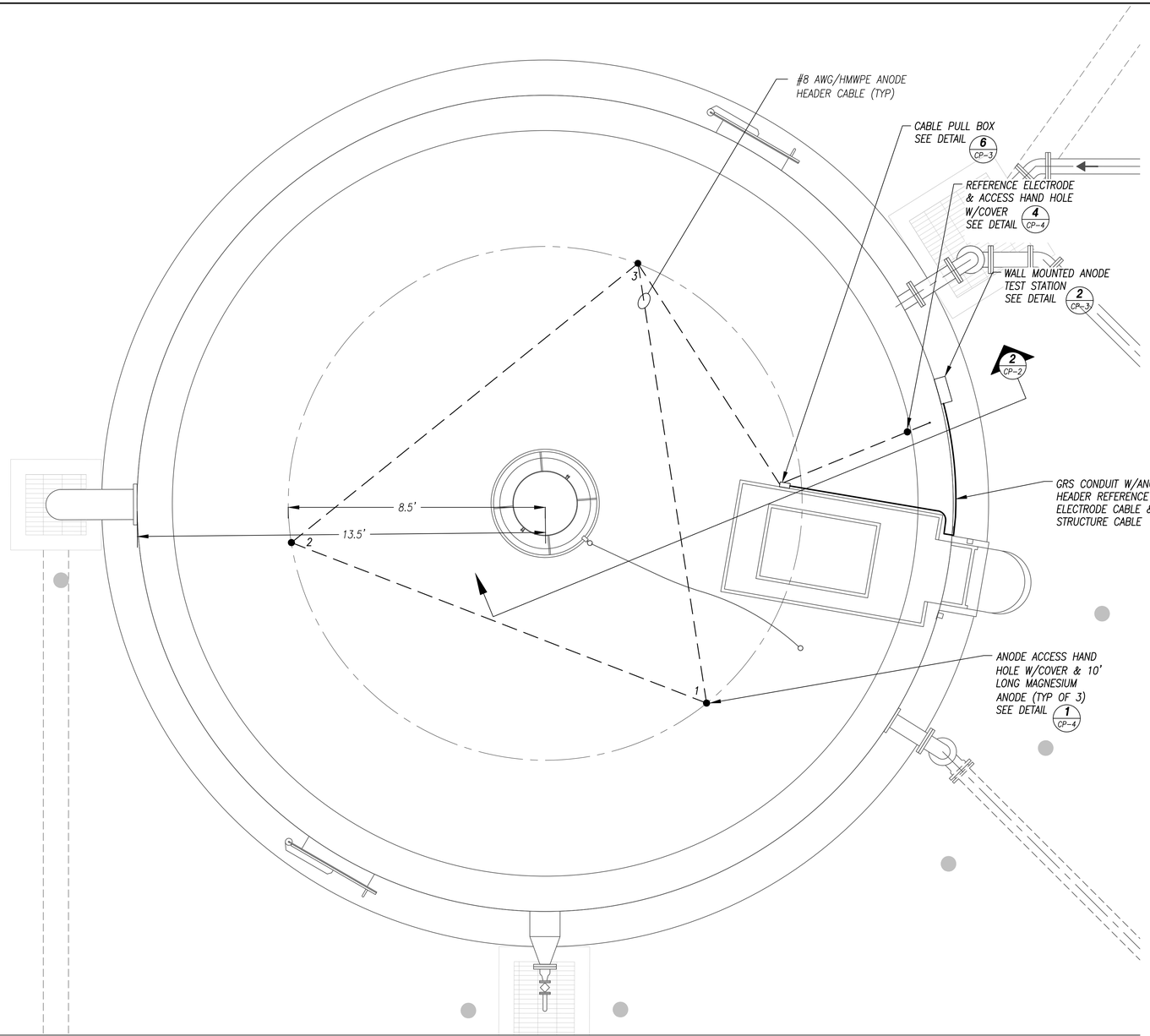

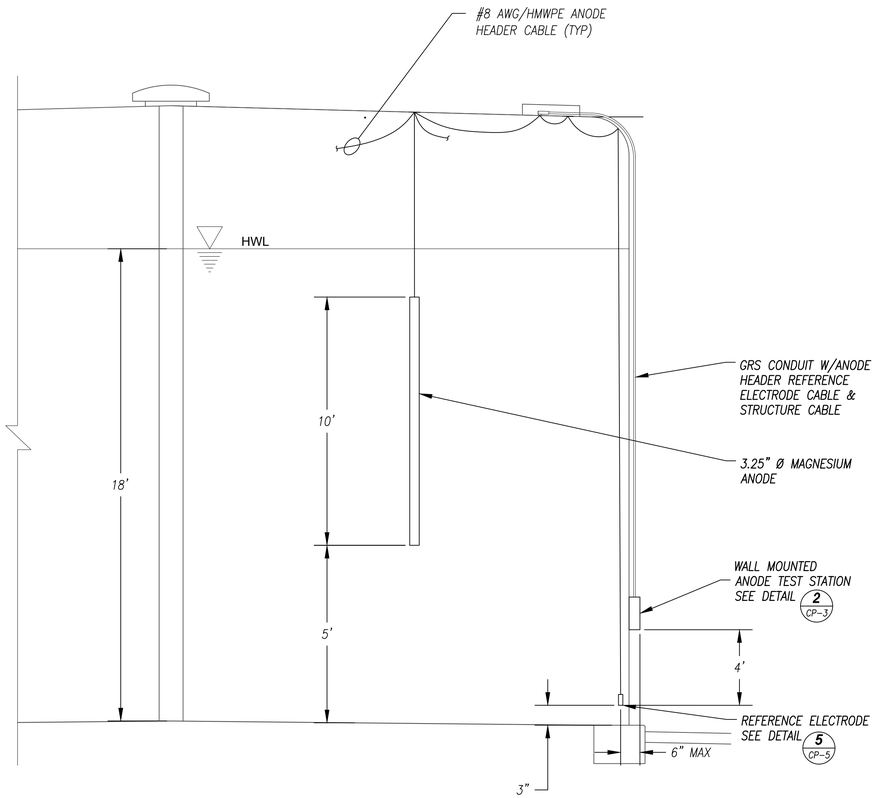

NOTES:
1. ROUTE CONDUIT TO NEW ANODE TEST STATION: 1" GALVANIZED RIGID CONDUIT W/(1) #8 AWG HMWPE ANODE HEADER CABLE & (1) #12 AWG/THHN CONTROL CABLE, AND (1) #14 AWG/THHN (YELLOW) REFERENCE ELECTRODE HEADER CABLE.
2. MINOR ADJUSTMENTS TO THE LOCATIONS OF THE ANODES MAY BE MADE AS REQUIRED TO AVOID CONFLICTS WITH RAFTERS. INSTALL REFERENCE ELECTRODE MIDWAY BETWEEN ANODE #1 AND ANODE #3.
3. IF THE INTERIOR LADDER IS STAINLESS STEEL, CONTACT THE PROJECT'S CORROSION ENGINEER FOR ADDITIONAL CORROSION CONTROL MEASURES REQUIRED.

1 / CP-2 CATHODIC PROTECTION PLAN - 27' DIAMETER, BACKWASH TANK
NOT TO SCALE

2 / CP-2 SECTION - 27' DIAMETER, BACKWASH TANK
NOT TO SCALE

jdh corrosion consultants, inc.
1100 Willow Pass Court Concord, CA 94520
(925)927-6630 FAX (925)927-6634
WWW.JDHCORROSION.COM

Designer Stamp: REGISTERED PROFESSIONAL ENGINEER MOHAMMED ALI No. CR 1035 Exp. June 30, 2025 CORROSION STATE OF CALIFORNIA

Record Drawings
Designer: _____ Date: _____
Public Works Inspector: _____ Date: _____
Utility/Facility Dept. Head: _____ Date: _____
Project Engineer: _____ Date: _____
Public Improvements Initially Accepted by the City Council on: _____ Res. No. _____

Drawn By: DJA Date: 8/15/24
Checked By: JDH Date: 8/15/24
Designed By: JAW Date: 8/15/24

Revisions

Num.	Description	Engr. Aprv.	Date
1			

CITY OF MILPITAS
ENGINEERING DIVISION
McCANDLESS WELL FACILITY
PROJECT NO. 7076
BACKWASH TANK CATHODIC PROTECTION PLAN & SECTION

RECOMMENDED FOR BIDDING BY: Lyhak Eam DATE: 2/7/2025
LYHAK EAM, P.E., Public Works Division Manager – Engineering

DWG NO. CP-2
PROJECT NO. 7076
Rec. Dwg No.
SCALE: AS SHOWN
SHEET 14 OF 70

J:\Project Folders\2018 Contracts\18182 - West Yost - TO 49 - Milpitas McCandless Well Construction\Design\CP McCandless Revit 15.dwg 2-05-25 04:01:01 PM jahalan

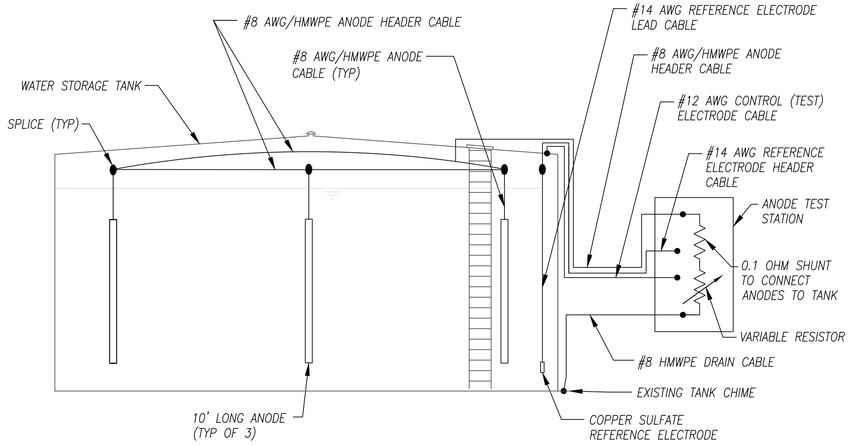

1 CP-3 SCHEMATIC - INTERNAL CATHODIC PROTECTION SYSTEM

NOT TO SCALE

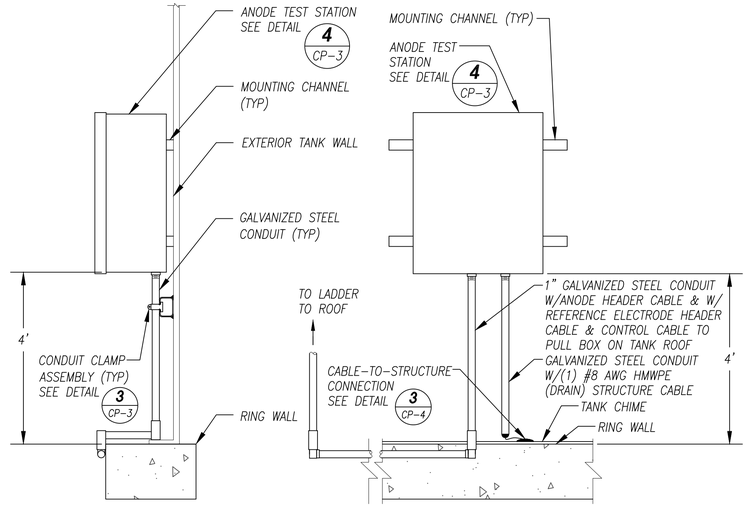

NOTES:
1. ATTACH RIGID STEEL CONDUIT TO THE RING WALL, THEN TO THE EXTERIOR LADDER SUPPORT BRACKETS.
2. ALL CONDUIT SHALL BE GALVANIZED RIGID STEEL CONDUIT AND PROVIDED WITH THE SAME COATING AS THE TANK.

2 CP-3 WALL MOUNTED, ANODE TEST STATION

NOT TO SCALE

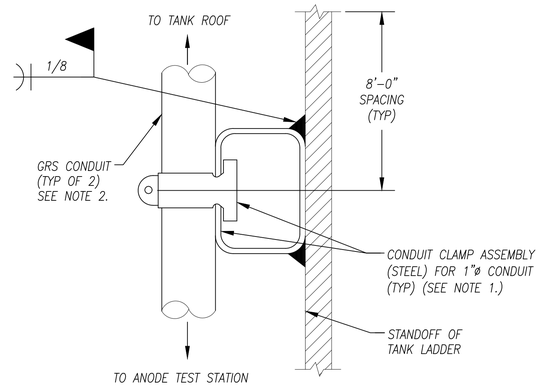

NOTES:
1. CONDUIT CHANNEL UNISTRUT TO BE WELDED TO TANK OR CONDUIT TO BE MOUNTED TO THE BOTTOM OF THE STANDOFFS/SUPPORTS OF THE TANK'S EXTERIOR LADDER. TOUCH UP AREAS DAMAGED BY THE WELDING PROCESS WITH A PRIMER AND TOP COAT PER SPECIFICATIONS.
2. THE CABLES IN THE CONDUIT WILL BE (1) #14 AWG/THHN (YELLOW) REFERENCE ELECTRODE HEADER CABLE, (1) #12 AWG/THHN (BLACK) CONTROL CABLE AND (1) #8 AWG/HMWPE ANODE HEADER CABLE.

3 CP-3 CONDUIT CLAMP ASSEMBLY

NOT TO SCALE

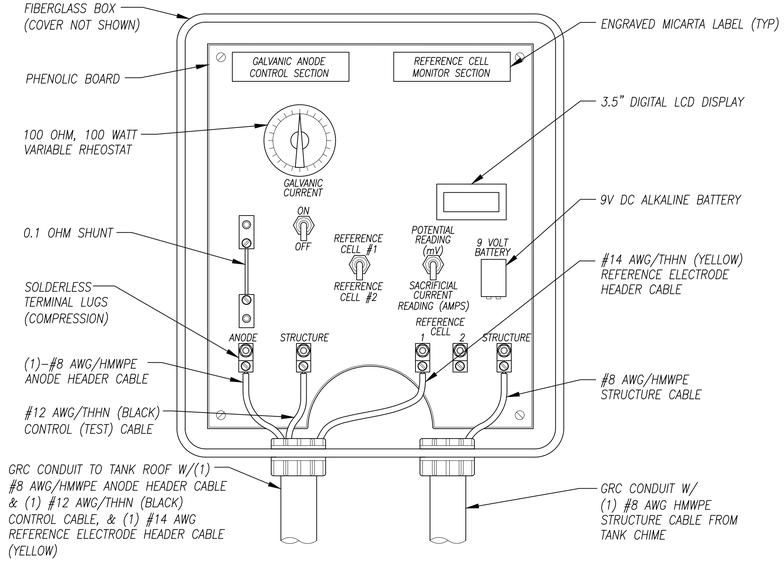

4 CP-3 ANODE TEST STATION

NOT TO SCALE

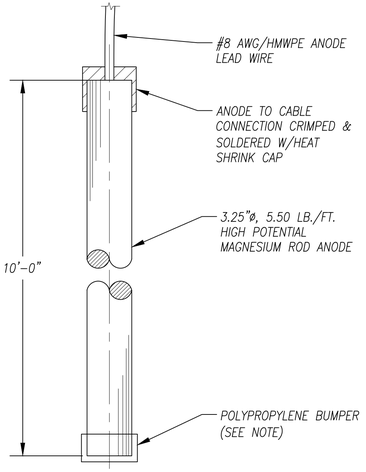

NOTE:
INSTALL A POLYPROPYLENE BUMPER ON ANY ANODE THAT IS CLOSER THAN 10 FEET FROM A COLUMN OR OTHER STRUCTURE

5 CP-3 MAGNESIUM ROD ANODE

NOT TO SCALE

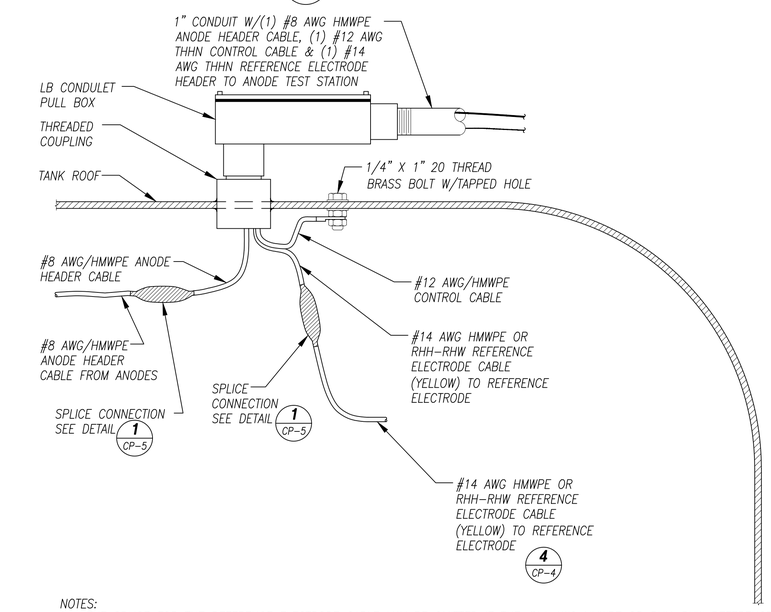

NOTES:
1. THE SPLICE FOR THE REFERENCE ELECTRODE CABLE MAY BE OMITTED IF THE #14 AWG HMWPE OR RHH-RHW REFERENCE ELECTRODE CABLE EXTENDS FULLY FROM THE REFERENCE ELECTRODE TO THE ANODE TEST STATION.
2. ENTRY HATCH IS NOT SHOWN. SEE PLAN 1/CP-2 FOR LAYOUT OF CONDUIT WITH RESPECT TO THE ENTRY HATCH.

6 CP-3 PULL BOX & CONDUIT ENTRY FOR CABLES

NOT TO SCALE

jdh corrosion consultants, inc.
1100 Willow Pass Court Concord, CA 94520
(925)927-6630 FAX (925)927-6634
WWW.JDHCORROSION.COM

Designer Stamp: REGISTERED PROFESSIONAL ENGINEER MOHAMMED ALI No. CR 1035 Exp. June 30, 2025 CORROSION STATE OF CALIFORNIA

Record Drawings

Designer: _____ Date: _____
Public Works Inspector: _____ Date: _____
Utility/Facility Dept. Head: _____ Date: _____
Project Engineer: _____ Date: _____
Public Improvements Initially Accepted by the City Council on: _____ Res. No. _____

Drawn By: DJA Date: 8/15/24
Checked By: JDH Date: 8/15/24
Designed By: JAW Date: 8/15/24

Revisions

Num.	Description	Engr. Aprv.	Date
1			

CITY OF MILPITAS
ENGINEERING DIVISION

McCANDLESS WELL FACILITY
PROJECT NO. 7076

STORAGE TANK CATHODIC PROTECTION SCHEMATIC & DETAILS 1

RECOMMENDED FOR BIDDING BY: Lyhak Eam DATE: 2/7/2025
LYHAK EAM, P.E., Public Works Division Manager – Engineering

DWG NO. CP-3
PROJECT NO. 7076
Rec. Dwg No.
SCALE: AS SHOWN
SHEET 15 OF 70

J:\Project Folders\2018 Contracts\18182 - West Yost - TO 49 - Milpitas McCandless Well Construction\Design\CP McCandless Rev6.15.dwg 2-06-25 04:01:03 PM jahalen

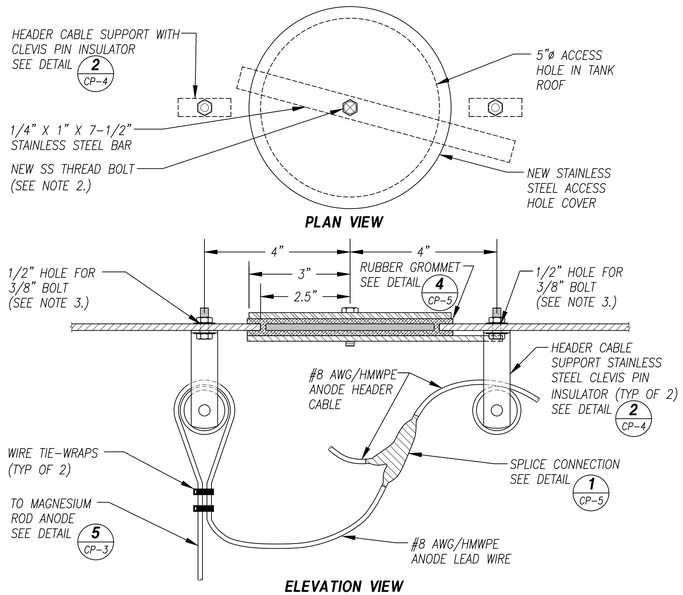

NOTES:
1. ALL 5-INCH DIAMETER HAND-HOLES SHALL BE CUT & BOLT HOLES DRILLED BEFORE COATING THE TANK.
2. THE END OF THE BOLT SHALL BE PEENED OR TWO NUTS SHALL BE INSTALLED AFTER 1/4"X1"X7-1/2" STAINLESS STEEL BAR IS INSTALLED.
3. ALIGN BOLT HOLES TO BE IN LINE WITH CENTER OF TANK WHEN DRILLING NEW HOLES.

1 CP-4 ANODE ACCESS HAND-HOLE COVER
NOT TO SCALE

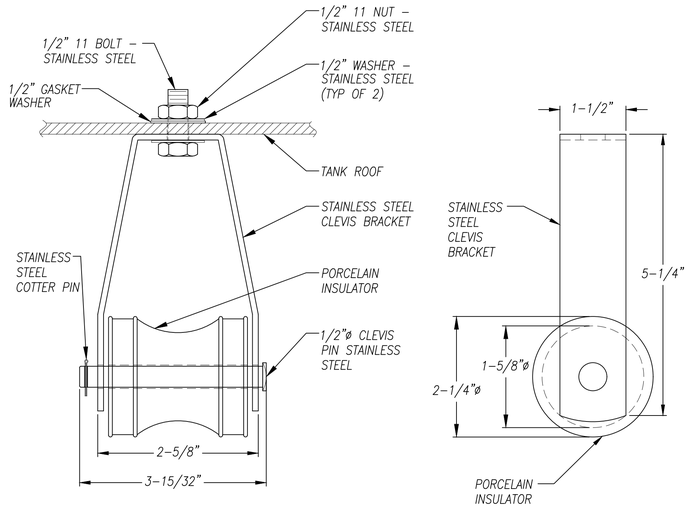

2 CP-4 CLEVIS PIN CABLE SUPPORT
NOT TO SCALE

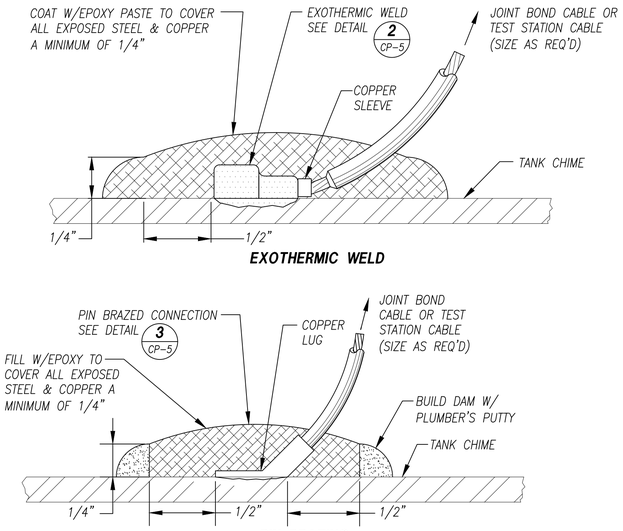

3 CP-4 CABLE-TO-STRUCTURE CONNECTION
NOT TO SCALE

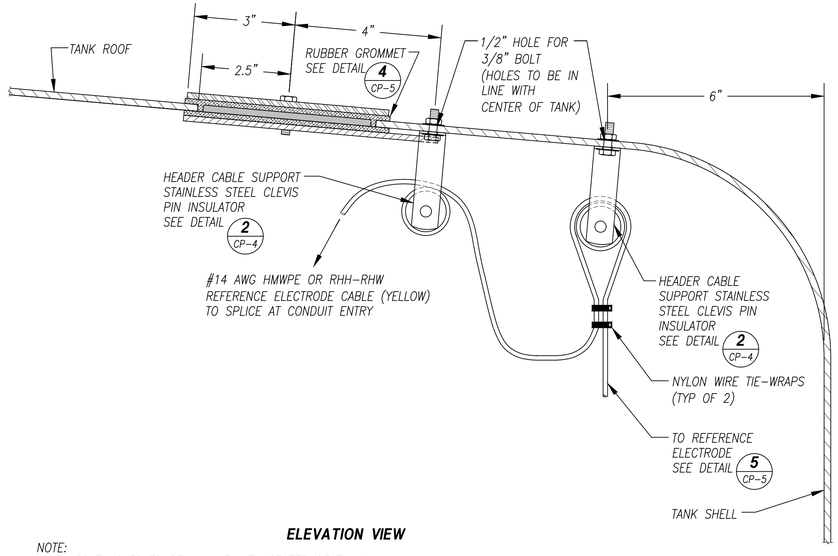

NOTE:
ALIGN BOLT HOLES TO BE IN LINE WITH CENTER OF TANK.

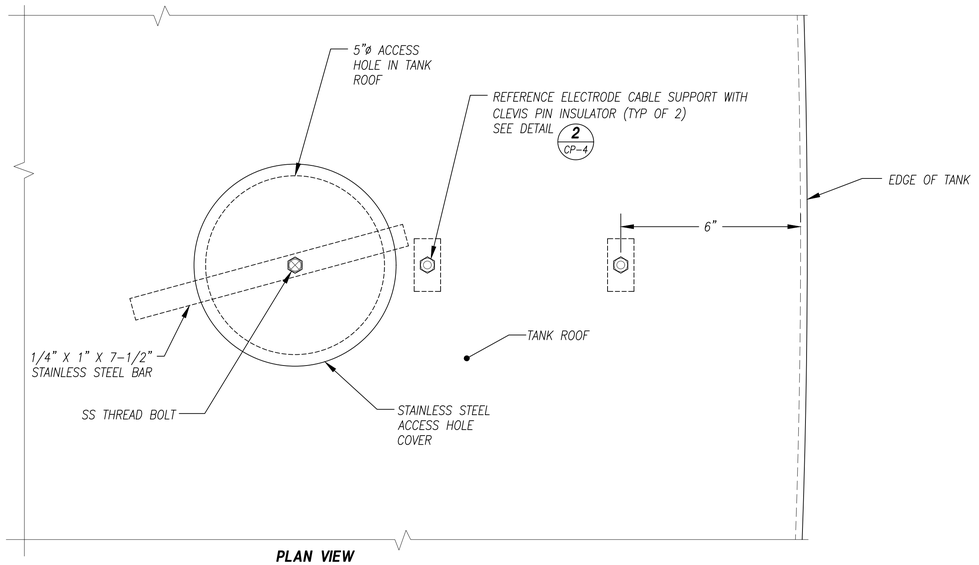

4 CP-4 REFERENCE ELECTRODE ACCESS HAND-HOLE & REFERENCE ELECTRODE SUSPENSION
NOT TO SCALE

jdh corrosion consultants, inc.
1100 Willow Pass Court Concord, CA 94520
(925)927-6630 FAX (925)927-6634
WWW.JDHCORROSION.COM

Designer Stamp: REGISTERED PROFESSIONAL ENGINEER MOHAMMED ALI No. CR 1035 Exp. June 30, 2025 CORROSION STATE OF CALIFORNIA

Record Drawings

Designer: _____ Date: _____
Public Works Inspector: _____ Date: _____
Utility/Facility Dept. Head: _____ Date: _____
Project Engineer: _____ Date: _____
Public Improvements Initially Accepted by the City Council on: _____ Res. No. _____

Drawn By: DJA Date: 8/15/24
Checked By: JDH Date: 8/15/24
Designed By: JAW Date: 8/15/24

Revisions

Num.	Description	Engr. Aprv.	Date
1			

CITY OF MILPITAS
ENGINEERING DIVISION

McCANDLESS WELL FACILITY
PROJECT NO. 7076

STORAGE TANK CATHODIC PROTECTION DETAILS 2

RECOMMENDED FOR BIDDING BY: Lyhak Eam DATE: 2/7/2025
LYHAK EAM, P.E., Public Works Division Manager - Engineering

DWG NO. CP-4
PROJECT NO. 7076
Rec. Dwg No.
SCALE: AS SHOWN
SHEET 16 OF 70

J:\Project Folders\2018 Contracts\18182 - West Yost - TO 49 - Milpitas McCandless Well Construction\Design\CP McCandless Rev6.15.dwg 2-06-25 04:01:05 PM jehalen

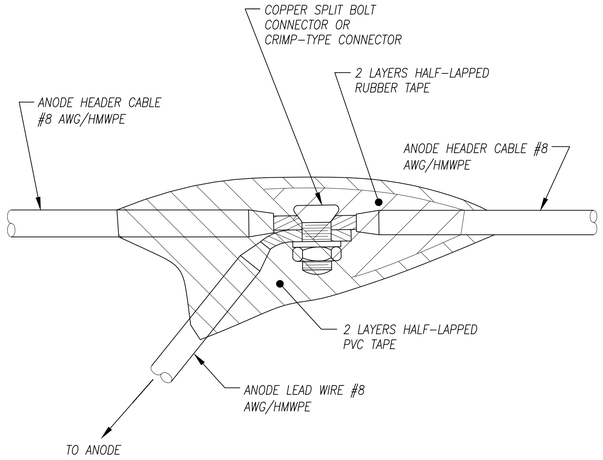

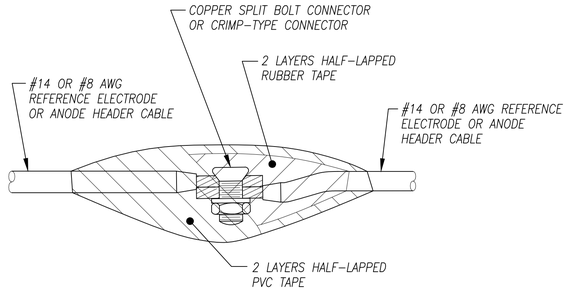

1 SPLICE CONNECTION
CP-5 NOT TO SCALE

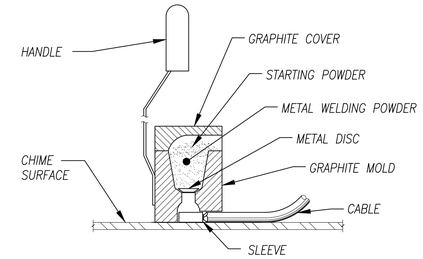

STEP 1. FILE STRUCTURE CONNECTION AREA TO BARE SHINY METAL AND CLEAN.

STEP 2. STRIP INSULATION FROM WIRE. ATTACH SLEEVE REQUIRED ON #6 AWG WIRE OR SMALLER

STEP 3. HOLD MOLD FIRMLY WITH OPENING AWAY FROM OPERATOR AND IGNITE WITH FLINT GUN.

STEP 4. REMOVE SLAG FROM CONNECTION AND PEEN WELD FOR SOUNDNESS.

STEP 5. COVER CONNECTION AND EXPOSED STRUCTURE SURFACE WITH EPOXY COATING COMPOUND PER DETAIL 3/CP-4.

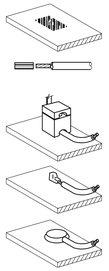

NOTE:
PROCEDURE SHOWN ABOVE IS TO BE USED AS A GENERAL GUIDE ONLY.
CONSULT MANUFACTURER'S LITERATURE FOR SPECIFIC INSTALLATION INSTRUCTIONS.

2 EXOTHERMIC WELD PROCEDURE
CP-5 NOT TO SCALE

STEP 1. FILE STRUCTURE CONNECTION AREA TO BARE SHINY METAL AND CLEAN.

STEP 2. STRIP INSULATION FROM WIRE. ATTACH LUG TO CABLE BY CRIMPING.

STEP 3. LOAD GUN WITH THE BRAZING PIN AND FERRULE.

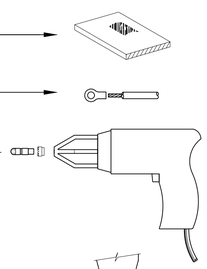

STEP 4. ADJUST AS NECESSARY. BRAZE THE CABLE & LUG TO THE PIPE.

STEP 5. PEEN CONNECTION WITH A HAMMER TO TEST CONNECTION FOR SOUNDNESS.

STEP 6. COVER CONNECTION AND EXPOSED STRUCTURE SURFACE WITH EPOXY COATING COMPOUND PER DETAIL 3, SHEET CP-4.

NOTE:
PROCEDURE SHOWN ABOVE IS TO BE USED AS A GENERAL GUIDE ONLY. CONSULT MANUFACTURER'S LITERATURE FOR SPECIFIC INSTALLATION INSTRUCTIONS.

3 PIN-BRAZED CONNECTION
CP-5 NOT TO SCALE

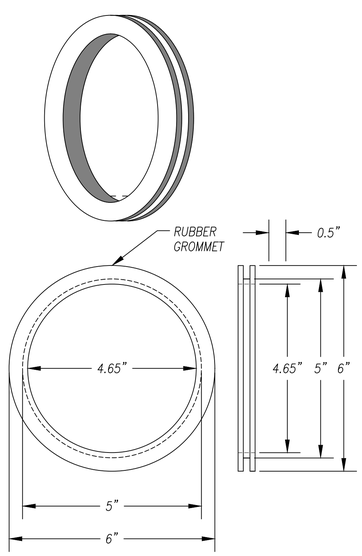

4 ANODE HAND HOLE RUBBER GROMMET
CP-5 NOT TO SCALE

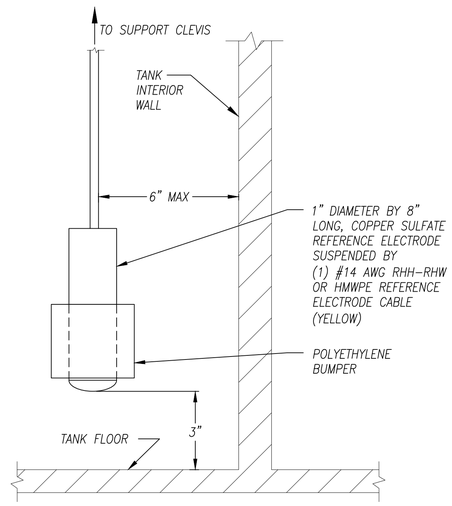

5 REFERENCE ELECTRODE INSTALLATION
CP-5 NOT TO SCALE

jdh corrosion consultants, inc.
1100 Willow Pass Court Concord, CA 94520
(925)927-6630 FAX (925)927-6634
WWW.JDHCORROSION.COM

Designer Stamp: REGISTERED PROFESSIONAL ENGINEER MOHAMMED ALI No. CR 1035 Exp. June 30, 2025 CORROSION STATE OF CALIFORNIA

Record Drawings

Designer: _____ Date: _____
Public Works Inspector: _____ Date: _____
Utility/Facility Dept. Head: _____ Date: _____
Project Engineer: _____ Date: _____
Public Improvements Initially Accepted by the City Council on: _____ Res. No. _____

Drawn By: DJA Date: 8/15/24
Checked By: JDH Date: 8/15/24
Designed By: JAW Date: 8/15/24

Revisions

Num.	Description	Engr. Aprv.	Date
1			

CITY OF MILPITAS
ENGINEERING DIVISION

McCANDLESS WELL FACILITY
PROJECT NO. 7076

STORAGE TANK CATHODIC PROTECTION DETAILS 3

RECOMMENDED FOR BIDDING BY: Lyhak Eam DATE: 2/7/2025
LYHAK EAM, P.E., Public Works Division Manager – Engineering

DWG NO. CP-5
PROJECT NO. 7076
Rec. Dwg No.
SCALE: AS SHOWN
SHEET 17 OF 70

J:\Project Folders\2018 Contracts\18182 - West Yost - TO 49 - Milpitas McCandless Well Construction\Design\CP McCandless Revd-15.dwg 2-06-25 04:01:08 PM jehsen

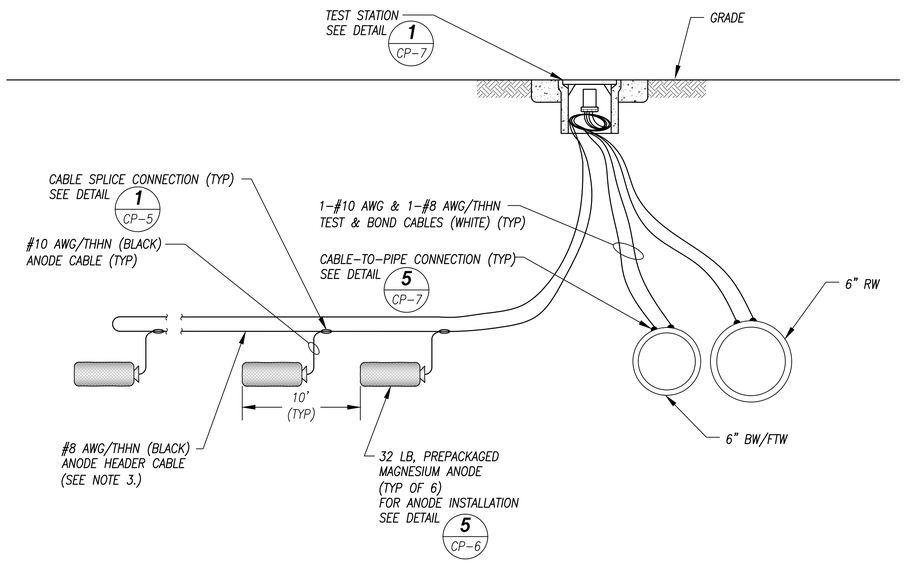

NOTES:
1. LOOP BACK ANODE HEADER CABLE TO TEST STATION.

1 CP-6 ATS - ANODE & TEST STATION - 6" RW & 6" BW/FTW

NOT TO SCALE

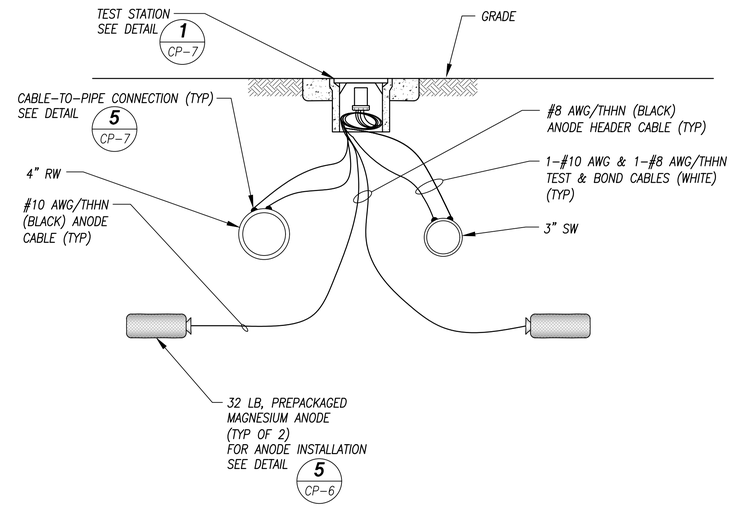

2 CP-6 ATS - ANODE & TEST STATION - 6" TW & 3" SW

NOT TO SCALE

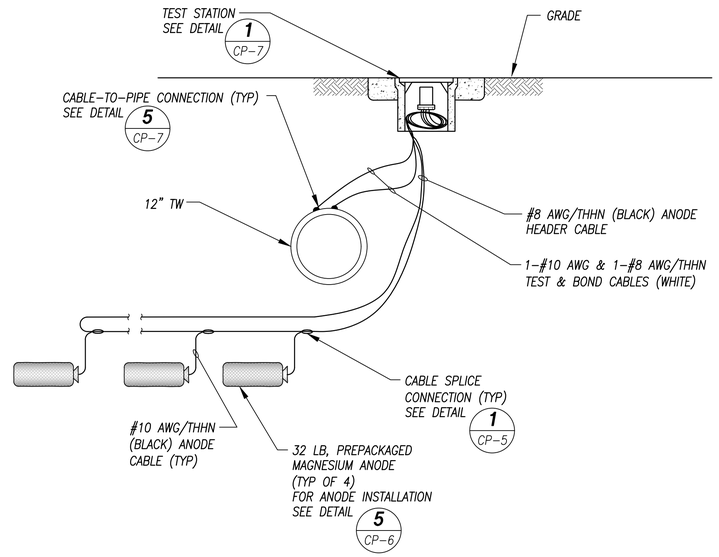

3 CP-6 ATS - ANODE & TEST STATION - 6" TW

NOT TO SCALE

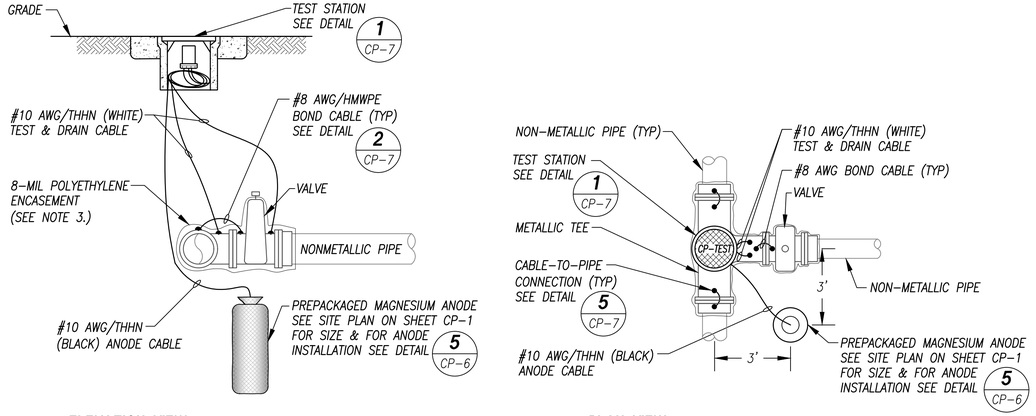

ELEVATION VIEW

PLAN VIEW

NOTES:
1. THE SAME DETAIL APPLIES TO TEE WITH 2 OR 3 VALVES.
2. FOR A FERROUS METAL TAPPING SADDLE, INSTALL ONE #8 AWG HMWPE BOND CABLE ACROSS EACH HALF OF THE SADDLE.
3. COAT ALL BURIED BOLTS & NUTS WITH BITUMASTIC AND ENCASE ALL DUCTILE IRON PIPE AND FITTINGS IN POLYETHYLENE PER CATHODIC PROTECTION GENERAL NOTE I.1. ON SHEET CP-1.

4 CP-6 ATS - V/T - TEE W/VALVE - ANODE & TEST STATION

NOT TO SCALE

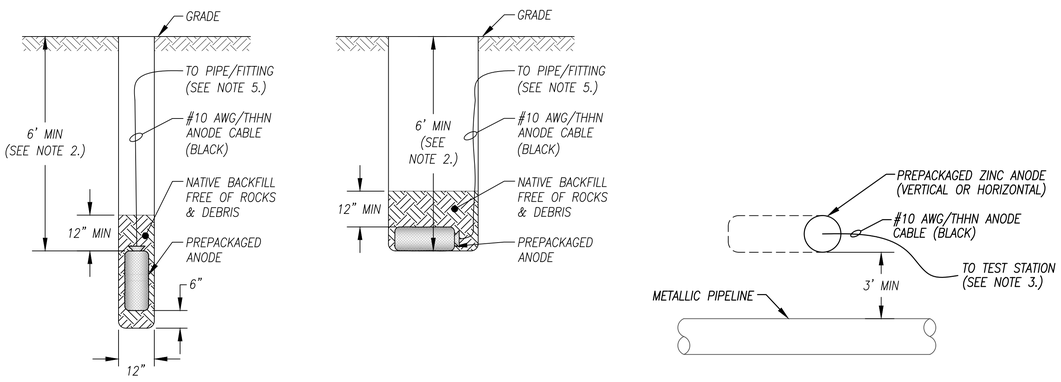

VERTICAL INSTALLATION **HORIZONTAL INSTALLATION** **PLAN VIEW**

NOTES:
1. INSTALL ANODES 3 FEET OFF THE PIPE/FITTING IN NATIVE SOIL.
2. FOR SACRIFICIAL ANODES PROTECTING DUCTILE IRON VALVES, FITTINGS & RISERS OF C900 PVC PIPELINES, ANODES MAY BE INSTALLED SUCH THAT THE TOP OF THE ANODE IS PLACED BELOW THE BOTTOM OF THE VALVE OR FITTING. FOR DUCTILE IRON PIPELINE INSTALLATIONS, ANODE SHALL BE INSTALLED TO A MINIMUM DEPTH OF 6 FEET AS INDICATED IN THIS DETAIL. A MINIMUM OF A 3 FEET DISTANCE SHALL BE MAINTAINED BETWEEN EACH ANODE AND THE DUCTILE IRON STRUCTURE IT PROTECTS IN ALL CASES.
3. THE ANODES MAY BE INSTALLED HORIZONTALLY OR VERTICALLY UPON DISCRETION OF THE CONTRACTOR.
4. MAINTAIN A MIN. DISTANCE OF 10 FEET BETWEEN ANODES IF MULTIPLE ANODES ARE INSTALLED.
5. CONNECT ANODE CABLE TO TEST STATION OR DIRECTLY TO PIPE OR FITTING AS SHOWN IN THE DRAWINGS.

5 CP-6 ANODE INSTALLATION

NOT TO SCALE

jdh corrosion consultants, inc.
1100 Willow Pass Court Concord, CA 94520
(925)927-6630 FAX (925)927-6634
WWW.JDHCORROSION.COM

Designer Stamp: REGISTERED PROFESSIONAL ENGINEER MOHAMMED "ALI" No. CR 1035 Exp. June 30, 2025 CORROSION STATE OF CALIFORNIA

Record Drawings

Designer: _____ Date: _____
Public Works Inspector: _____ Date: _____
Utility/Facility Dept. Head: _____ Date: _____
Project Engineer: _____ Date: _____
Public Improvements Initially Accepted by the City Council on: _____ Res. No. _____

Drawn By: DJA Date: 8/15/24
Checked By: JDH Date: 8/15/24
Designed By: JAW Date: 8/15/24

Revisions

Num.	Description	Engr. Aprv.	Date
1			

CITY OF MILPITAS
ENGINEERING DIVISION

McCANDLESS WELL FACILITY
PROJECT NO. 7076

YARD PIPING CATHODIC PROTECTION DETAILS 1

RECOMMENDED FOR BIDDING BY: Lyhak Eam DATE: 2/7/2025
LYHAK EAM, P.E., Public Works Division Manager – Engineering

DWG NO. CP-6
PROJECT NO. 7076
Rec. Dwg No.
SCALE: AS SHOWN
SHEET 18 OF 70

h:\Project Folders\2018 Contracts\18182 - West Yost - TO 49 - Milpitas McCandless Well Construction\Design\CP McCandless Rev6.15.dwg 2-06-25 04:01:11 PM jwhalen

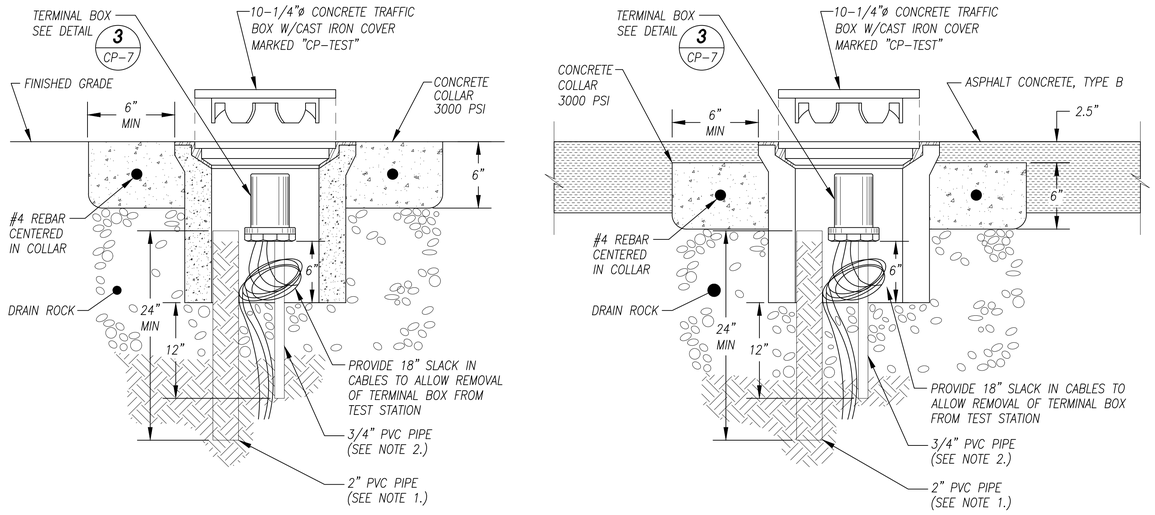

LANDSCAPED AREA **PAVED AREA**

NOTES:
1. INSTALL 2" PVC PIPE IN CLEAN NATIVE SOIL. FILL PIPE WITH CLEAN SOIL, FREE FROM ROCKS & DEBRIS.
2. INSTALL 18" LENGTH OF 3/4" PVC PIPE TO ENSURE THAT THE TERMINAL BOX WILL REMAIN IN THE UPRIGHT POSITION. POSITION THE PIPE SO THAT THE TERMINAL BOX WILL BE AS HIGH AS POSSIBLE WITH THE CAST IRON LID STILL CLOSING PROPERLY.

1 FLUSH MOUNTED TEST STATION CONCRETE BOX
CP-7 NOT TO SCALE

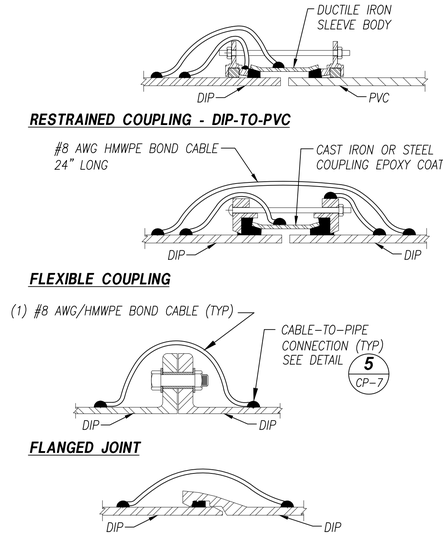

2 BONDING FOR DUCTILE IRON FITTINGS
CP-7 NOT TO SCALE

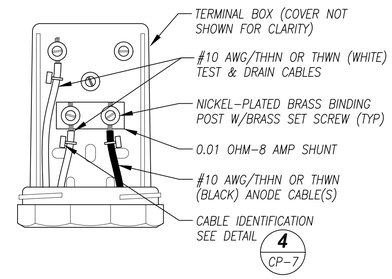

NOTE:
INSTALL SHUNT IN POSITION SHOWN.

3 TERMINAL BOX
CP-7 NOT TO SCALE

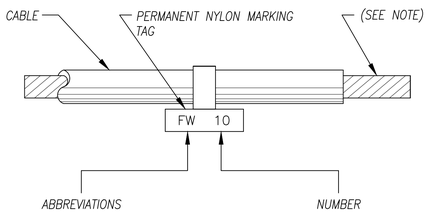

NOTE:
REMOVE INSULATION PRIOR TO FASTENING CABLE WITH SET SCREW.

4 CABLE IDENTIFICATION
CP-7 NOT TO SCALE

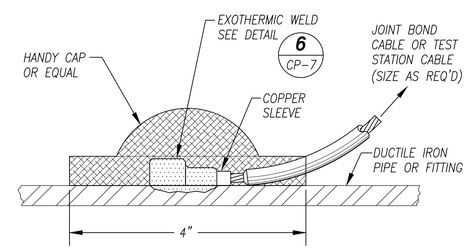

HANDY CAP

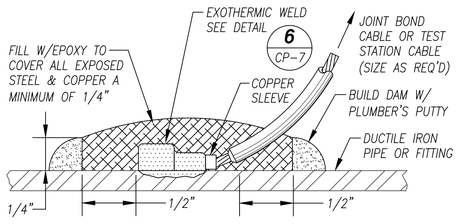

EPOXY COATING COMPOUND

NOTE:
DO NOT USE EXOTHERMIC WELDS ON STAINLESS STEEL, BRASS OR COPPER PIPE.

5 CABLE-TO-PIPE CONNECTION
CP-7 NOT TO SCALE

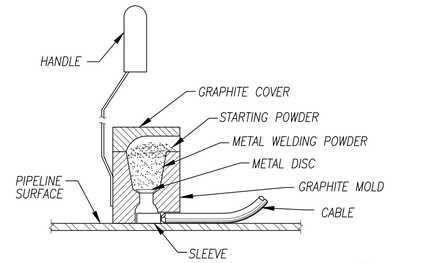

STEP 1. FILE STRUCTURE CONNECTION AREA TO BARE SHINY METAL AND CLEAN.

STEP 2. STRIP INSULATION FROM WIRE. ATTACH SLEEVE REQUIRED ON #6 AWG WIRE OR SMALLER

STEP 3. HOLD MOLD FIRMLY WITH OPENING AWAY FROM OPERATOR AND IGNITE WITH FLINT GUN.

STEP 4. REMOVE SLAG FROM CONNECTION AND PEEN WELD FOR SOUNDNESS.

STEP 5. COVER CONNECTION AND EXPOSED STRUCTURE SURFACE EPOXY COATING COMPOUND OR WITH A ROYSTON HANDY CAP OR EQUAL PER DETAIL 5 ON SHEET CP-7.

NOTE:
PROCEDURE SHOWN ABOVE IS TO BE USED AS A GENERAL GUIDE ONLY. CONSULT MANUFACTURER'S LITERATURE FOR SPECIFIC INSTALLATION INSTRUCTIONS.

6 EXOTHERMIC WELD
CP-7 NOT TO SCALE

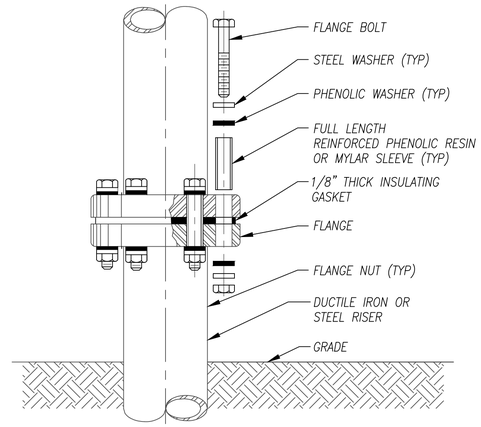

NOTES:
1. THE INSULATING FLANGE KIT SHALL BE FOR WATER SERVICE, SUITABLE FOR WET & DRY LOCATIONS, AND BE OF SAME PRESSURE RATING AS THE FLANGE.
2. THE ALLOY OF THE STEEL WASHERS SHALL BE THE SAME AS IS SPECIFIED FOR THE FLANGE BOLTS.
3. SEE CATHODIC PROTECTION GENERAL NOTE 5. ON SHEET CP-1.

7 FLANGED INSULATING JOINT
CP-7 NOT TO SCALE

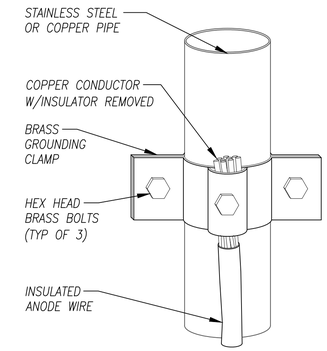

NOTES:
1. CLEAN PIPE WITH A WIRE BRUSH AND STRIP WIRE INSULATION AT THE GROUNDING CLAMP TO ENSURE ELECTRICAL CONTINUITY.
2. ALL BOLTS SHALL BE BRASS WITH HEX HEADS.

8 GROUNDING CLAMP CONNECTION
CP-7 NOT TO SCALE

jdh corrosion consultants, inc.
1100 Willow Pass Court Concord, CA 94520
(925)927-6630 FAX (925)927-6634
WWW.JDHCORROSION.COM

Designer Stamp: REGISTERED PROFESSIONAL ENGINEER MOHAMMED A.I. No. CR 1035 Exp. June 30, 2025 CORROSION STATE OF CALIFORNIA

Record Drawings

Designer: _____ Date: _____
Public Works Inspector: _____ Date: _____
Utility/Facility Dept. Head: _____ Date: _____
Project Engineer: _____ Date: _____
Public Improvements Initially Accepted by the City Council on: _____ Res. No. _____

Drawn By: DJA Date: 8/15/24
Checked By: JDH Date: 8/15/24
Designed By: JAW Date: 8/15/24

Revisions

Num.	Description	Engr. Aprv.	Date
1			

CITY OF MILPITAS
ENGINEERING DIVISION

McCANDLESS WELL FACILITY
PROJECT NO. 7076

YARD PIPING CATHODIC PROTECTION DETAILS 2

RECOMMENDED FOR BIDDING BY: Lyhak Eam DATE: 2/7/2025
LYHAK EAM, P.E., Public Works Division Manager – Engineering

DWG NO. CP-7
PROJECT NO. 7076
Rec. Dwg No.
SCALE: AS SHOWN
SHEET 19 OF 70

H:\Project Folders\2016 Contracts\16182 - West Yost - TO 49 - Milpitas McCandless Well Construction\Design\CP McCandless Rev6.15.dwg 2-06-25 04:01:13 PM jwhalen

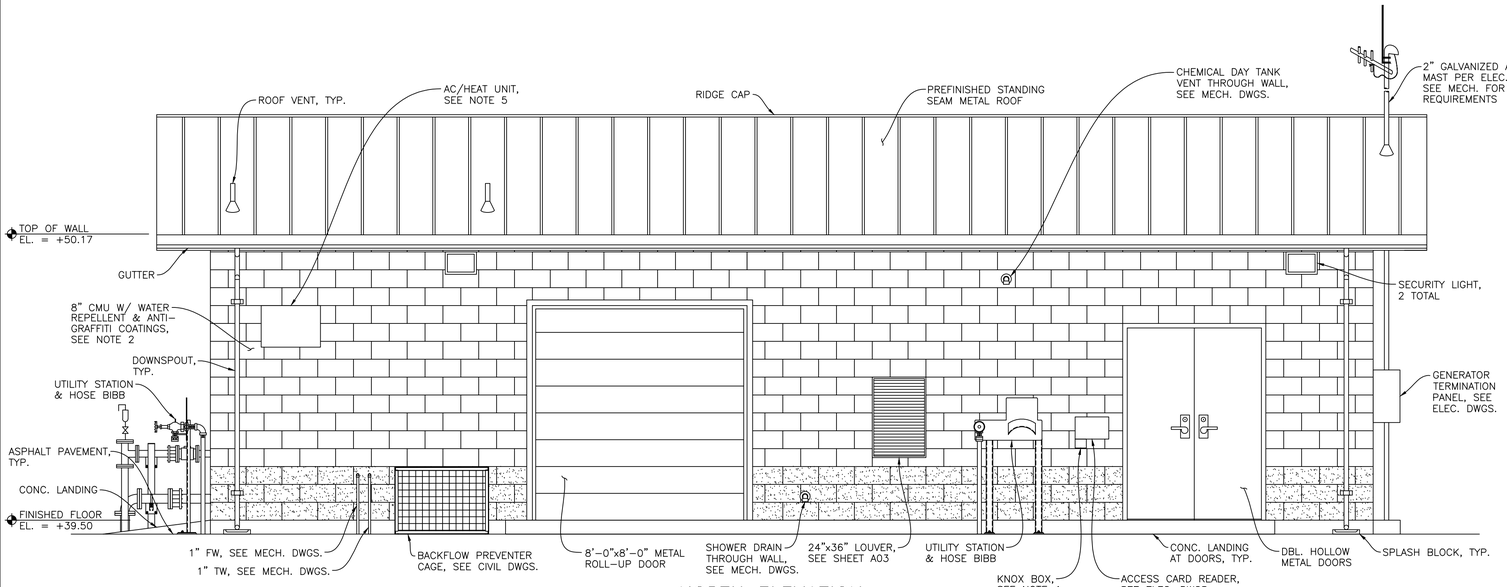

NORTH ELEVATION
3/8" = 1'-0"

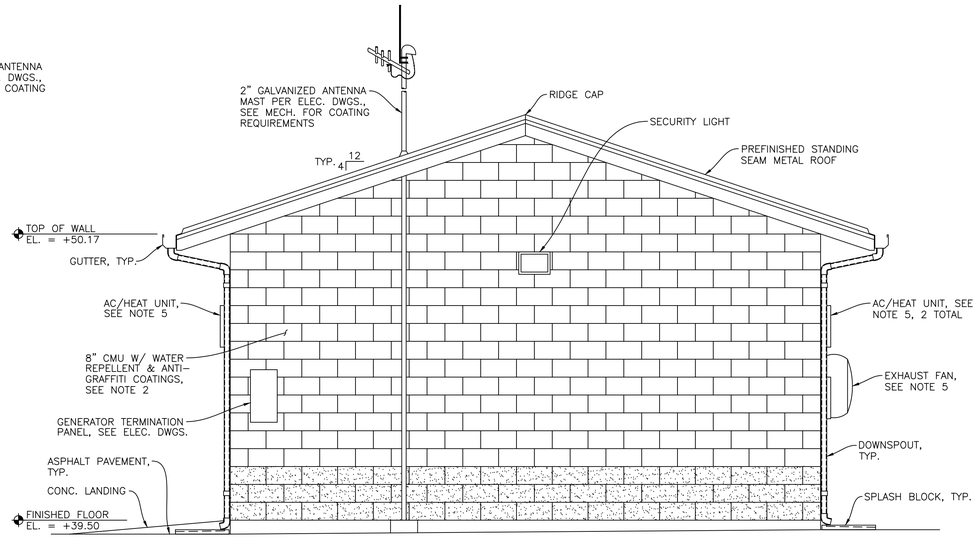

WEST ELEVATION
3/8" = 1'-0"

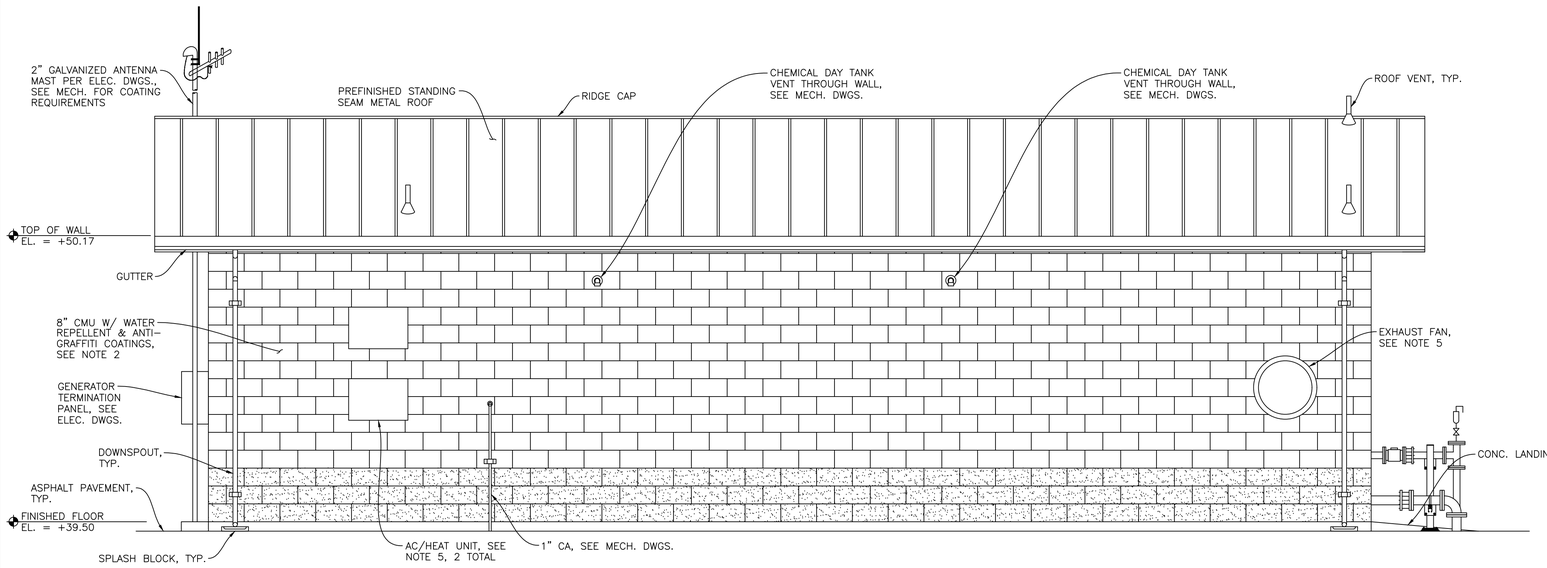

SOUTH ELEVATION
3/8" = 1'-0"

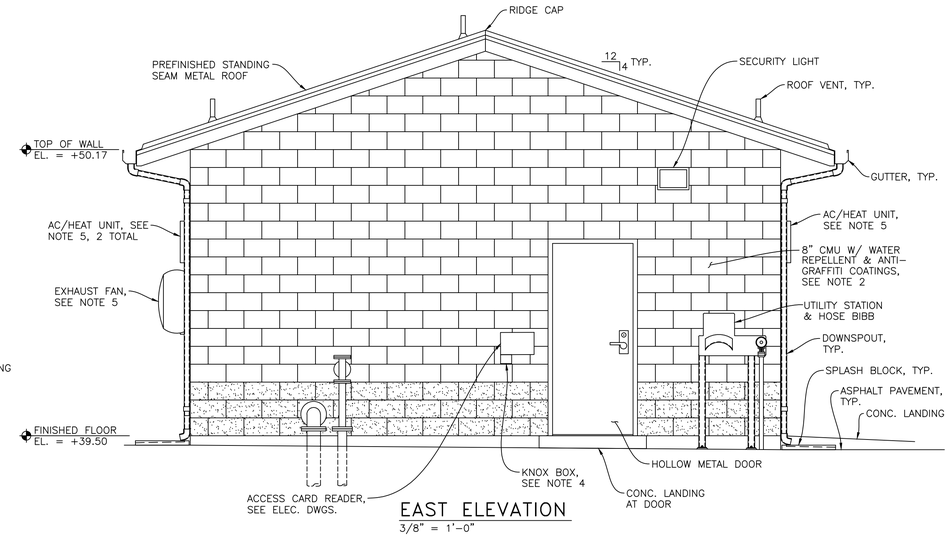

EAST ELEVATION
3/8" = 1'-0"

SHEET NOTES:

1. SEE PROJECT SPECIFICATIONS FOR DOOR REQUIREMENTS AND SHEET A03 FOR DOOR DETAILS & DOOR SCHEDULE.
2. BOTTOM THREE COURSES OF CMU SHALL BE SPLIT-FACE TAN BLOCK. ALL OTHER COURSES OF CMU SHALL BE GROUND-FACE TAN BLOCK. SEE PROJECT SPECIFICATIONS FOR WATER REPELLENT & ANTI-GRAFFITI COATING REQUIREMENTS.
3. SEE SECTION C ON SHEET S06 FOR DETAILS OF DOWNSPOUTS AND SPLASH BLOCKS.
4. KNOX BOX MODEL 3200, BLACK COLOR, WITH TAMPER ALERT AND NO FIRE ALARM. SURFACE MOUNT WITH 4 – $\frac{3}{8}\phi$ EXPANSION ANCHORS. COORDINATE WITH MILPITAS FIRE DEPARTMENT.
5. SEE MECH. DWGS. FOR AC/HEAT UNIT AND EXHAUST FAN MODELS AND SIZES. ANCHOR PER MANUFACTURER'S RECOMMENDATIONS.

PASE
408.957.9220 www.pase.com

Designer Stamp:
REGISTERED PROFESSIONAL ENGINEER
TIMOTHY E. ELLIOTT
C 63260
S 4946
CIVIL & STRUCTURAL
STATE OF CALIFORNIA
02/06/25

Record Drawings

Designer: _____ Date: _____
Public Works Inspector: _____ Date: _____
Utility/Facility Dept. Head: _____ Date: _____
Project Engineer: _____ Date: _____
Public Improvements Initially Accepted by the City Council on: _____ Res. No. _____

Drawn By: REM Date: 02/06/25
Checked By: TEE Date: 02/06/25
Designed By: TEE Date: 02/06/25

Revisions

Num.	Description	Engr. Aprv.	Date
1			

CITY OF MILPITAS
ENGINEERING DIVISION

McCANDLESS WELL FACILITY
PROJECT NO. 7076

CHEMICAL BUILDING ELEVATIONS

RECOMMENDED FOR BIDDING BY: Lyhak Eam DATE: 2/7/2025
LYHAK EAM, P.E., Public Works Division Manager – Engineering

DWG NO. A01
PROJECT NO. 7076
Rec. Dwg No.
SCALE: AS SHOWN
SHEET 20 OF 70

Y:\Projects\23-DWGS\23-336 McCandless Well Facility\23-336A01.dwg 2/6/2025 11:36 AM telliott

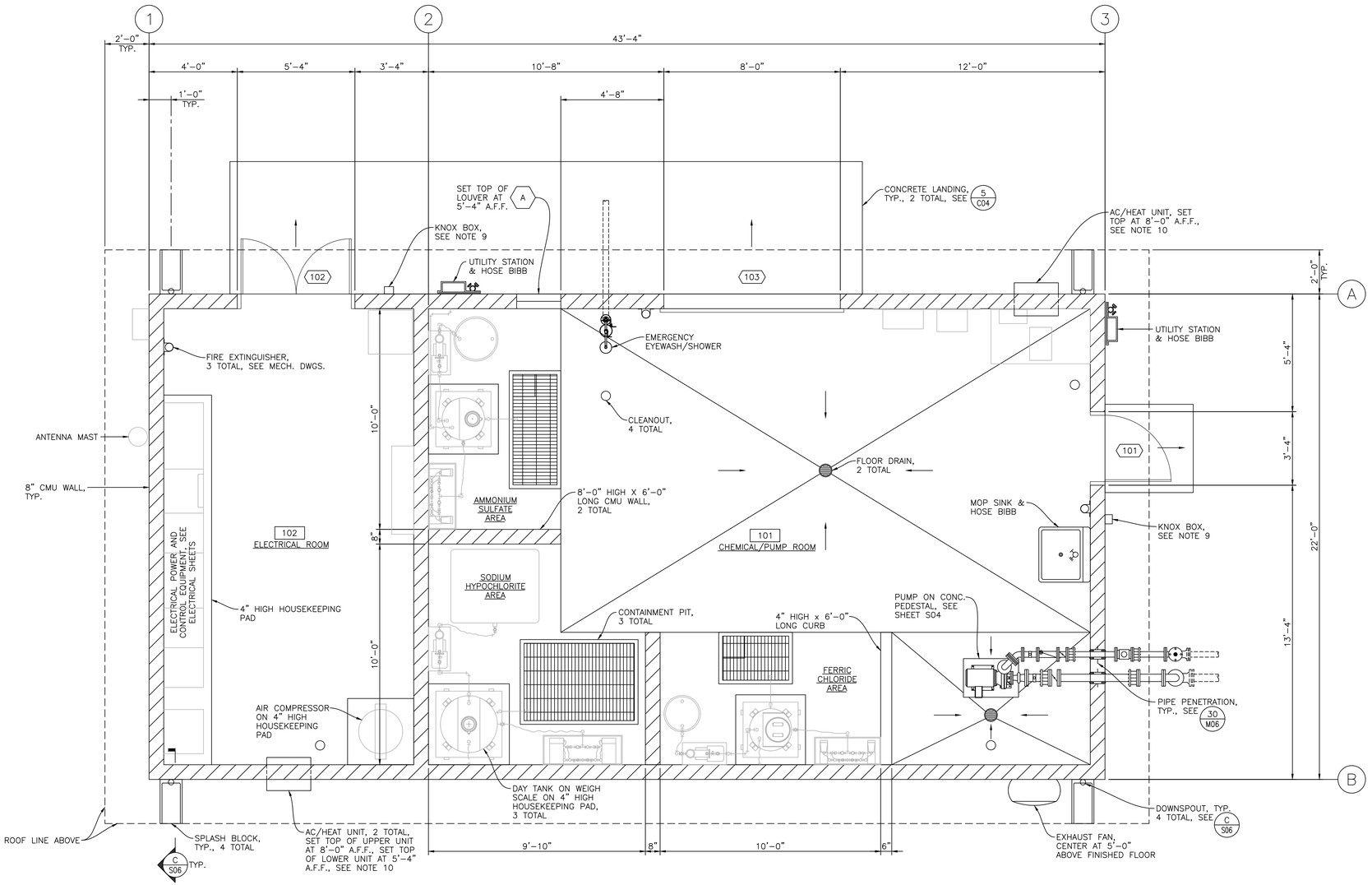

CHEMICAL BUILDING FLOOR PLAN
3/8" = 1'-0"

FLOOR PLAN NOTES:

1. SEE GENERAL NOTES & SPECIFICATIONS ON SHEET S01.
2. ALL DIMENSIONS ARE TO NOMINAL FACE OF MASONRY BLOCK OR TO FACE OF CONCRETE, U.N.O.
3. ▨ DENOTES MASONRY BLOCK WALL
4. → DENOTES DIRECTION OF CONCRETE SLAB SLOPE. SEE FOUNDATION PLAN ON SHEET S04 FOR TOP OF SLAB ELEVATIONS.
5. SEE SHEET A03 FOR ARCHITECTURAL FINISH SCHEDULE SHOWING INTERIOR FINISH REQUIREMENTS.
6. [101] ROOM NUMBER, SEE FINISH SCHEDULE ON SHEET A03.
7. ⟨101⟩ DOOR NUMBER, SEE DOOR SCHEDULE ON SHEET A03.
8. SEE MECH. DWGS FOR DESCRIPTION OF ALL EQUIPMENT AND PLUMBING NOT NOTED.
9. KNOX BOX MODEL 3200, BLACK COLOR, WITH TAMPER ALERT AND NO FIRE ALARM. SURFACE MOUNT WITH 4 – ⅜"ø EXPANSION ANCHORS. COORDINATE WITH MILPITAS FIRE DEPARTMENT.
10. AC/HEAT UNIT CONDENSATE DRAINS SHALL BE PIPED TO EQUIPMENT DRAINS IN THE FLOOR. SEE MECH. DWGS.
11. ⟨A⟩ LOUVER NUMBER, SEE LOUVER SCHEDULE ON SHEET A03.

BUILDING CODE ANALYSIS[1]	
ITEM	VALUE
DESCRIPTION OF USE	POTABLE WATER PUMP STATION
OCCUPANCY GROUP	F-1
CONSTRUCTION TYPE	VB
SEPARATION	NO SEPARATION REQUIREMENT
NUMBER OF STORIES	1
ALLOWABLE NUMBER OF STORIES	1
BUILDING HEIGHT	16 FT.
ALLOWABLE BUILDING HEIGHT	40 FT.
BUILDING AREA	953 FT.[2]
ALLOWABLE BUILDING AREA	8,500 FT [2]
AUTOMATIC SPRINKLER SYSTEM	NOT REQUIRED[2]

NOTES:
1. CODE BASIS: 2022 CALIFORNIA BUILDING CODE (CBC).
2. AUTOMATIC FIRE SPRINKLERS ARE NOT REQUIRED PER MILPITAS MUNICIPAL CODE ORDINANCE NO. 113.26 V-300-2.69.

CODE INFORMATION:

1. THE FOLLOWING CODE INFORMATION SHALL BE USED FOR CODE ANALYSIS PURPOSES ONLY.
2. CHEMICALS STORED IN THE CHEMICAL/PUMP ROOM CONSIST OF THE FOLLOWING:

CHEMICAL NAME	SODIUM HYPOCHLORITE	FERRIC CHLORIDE	AMMONIUM SULFATE
CONCENTRATION	12.5%	40%	39%
ACID/BASE	BASE	ACID	ACID
CAS NUMBER	7681-52-9	7705-08-0	7783-20-2
CFC CLASS – PHYSICAL	N/A	N/A (IRRITANT)	N/A (IRRITANT)
CFC CLASS – HEALTH	CORROSIVE	N/A	N/A
STORAGE	ONE 275 GAL TOTE; ONE 155 GAL DAY TANK	ONE 30 GAL DRUM; ONE 30 GAL DAY TANK	ONE 55 GAL DRUM; ONE 55 GAL DAY TANK
USE	155 GAL, CLOSED	30 GAL, CLOSED	55 GAL, CLOSED
SPILL CONTAINMENT	327 GAL (5'Lx3.5'Wx2.5'D)	45 GAL (3'Lx2'Wx1'D)	75 GAL (5'Lx2'Wx1'D)

PASE
408.957.9220 www.pase.com

Designer Stamp: REGISTERED PROFESSIONAL ENGINEER TIMOTHY E. ELLIOTT C 63260 S 4946 CIVIL & STRUCTURAL STATE OF CALIFORNIA 02/06/25

Record Drawings
Designer: _____ Date: _____
Public Works Inspector: _____ Date: _____
Utility/Facility Dept. Head: _____ Date: _____
Project Engineer: _____ Date: _____
Public Improvements Initially Accepted by the City Council on: _____ Res. No. _____

Drawn By: REM Date: 02/06/25
Checked By: TEE Date: 02/06/25
Designed By: TEE Date: 02/06/25

Revisions

Num.	Description	Engr. Aprv.	Date
1			

CITY OF MILPITAS
ENGINEERING DIVISION

McCANDLESS WELL FACILITY
PROJECT NO. 7076

CHEMICAL BUILDING FLOOR PLAN

RECOMMENDED FOR BIDDING BY: Lyhak Eam DATE: 2/7/2025
LYHAK EAM, P.E., Public Works Division Manager – Engineering

DWG NO. A02
PROJECT NO. 7076
Rec. Dwg No.
SCALE: AS SHOWN
SHEET 21 OF 70

Y:\Projects\23-DWGS\23-336 McCandless Well Facility\23-336A02.dwg 2/6/2025 2:24 PM telliott

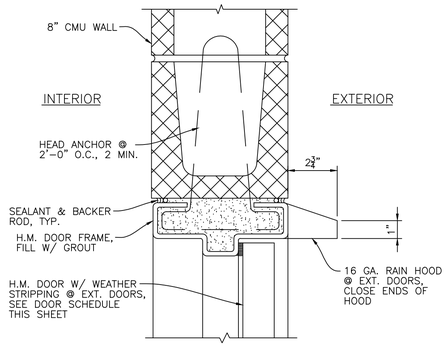

HOLLOW METAL DOOR HEAD

DETAIL 1 / A03 — 3" = 1'-0"

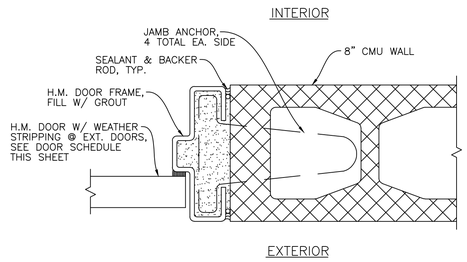

HOLLOW METAL DOOR JAMB

DETAIL 2 / A03 — 3" = 1'-0"

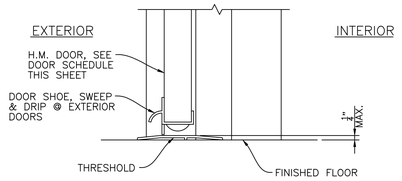

HOLLOW METAL DOOR SILL

DETAIL 3 / A03 — 3" = 1'-0"

ARCHITECTURAL FINISH SCHEDULE

SPACE		FLOOR			WALLS			CEILING			
NO.	ROOM	MATERIAL	FINISH	COATING	MATERIAL	FINISH	COLOR	HEIGHT	MATERIAL	FINISH	COLOR
101	CHEMICAL/ PUMP ROOM	CONCRETE	STEEL TROWEL	EPOXY SEALER (1)	MASONRY	PAINT	SEE SPECS	10'-8"	5/8" GYPSUM BOARD	PAINT	SEE SPECS
102	ELECTRICAL ROOM	CONCRETE	STEEL TROWEL	EPOXY SEALER (1)	MASONRY	PAINT	SEE SPECS	10'-8"	5/8" GYPSUM BOARD	PAINT	SEE SPECS

FINISH NOTES:
1. EPOXY SEALER PER PROJECT SPECIFICATIONS.

DOOR SCHEDULE

DOOR						FRAME		
DR. NO.	ROOM	TYPE	MTL.	SIZE	DOOR HARDWARE TYPE (1)	MTL.	SIZE	REMARKS
101	CHEMICAL/PUMP ROOM	A	H.M.	3'-0"x7'-2"	A	H.M.	2"x5 3/4"	NONE
102	ELECTRICAL ROOM	B	H.M.	DBL, 2'-6"x7'-2"	B	H.M.	2"x5 3/4"	PROVIDE PANIC HARDWARE
103	CHEMICAL/PUMP ROOM	C	GALV. STEEL	8'-0"x8'-0"	N/A	GALV. STEEL	SEE DETAIL 6	NONE

DOOR NOTES:
1. DOOR HARDWARE TYPE PER PROJECT SPECIFICATIONS.

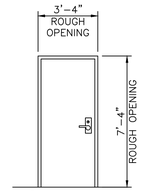

(A) EXTERIOR DOOR

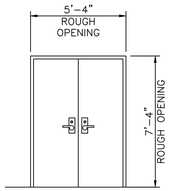

(B) EXTERIOR DOOR

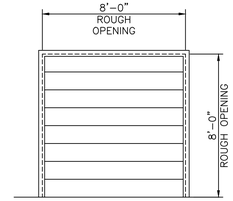

(C) EXTERIOR ROLL-UP DOOR

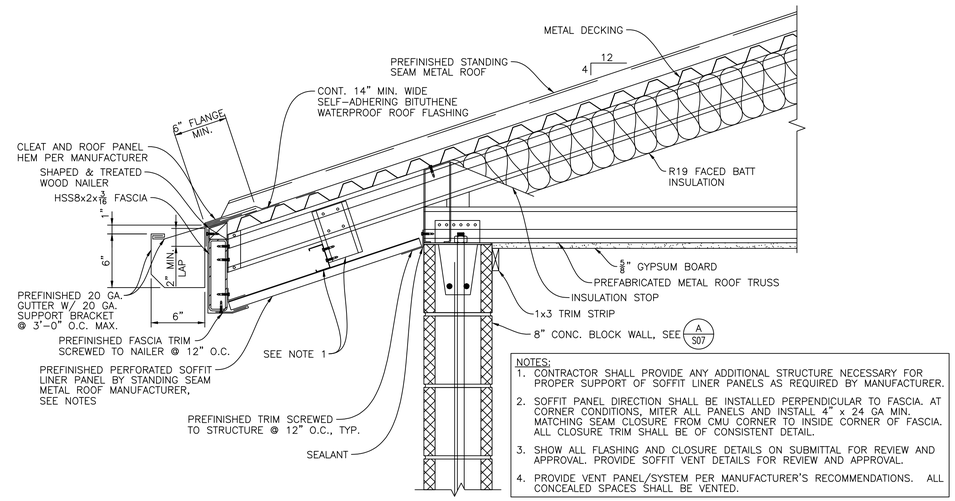

NOTES:
1. CONTRACTOR SHALL PROVIDE ANY ADDITIONAL STRUCTURE NECESSARY FOR PROPER SUPPORT OF SOFFIT LINER PANELS AS REQUIRED BY MANUFACTURER.
2. SOFFIT PANEL DIRECTION SHALL BE INSTALLED PERPENDICULAR TO FASCIA. AT CORNER CONDITIONS, MITER ALL PANELS AND INSTALL 4" x 24 GA MIN. MATCHING SEAM CLOSURE FROM CMU CORNER TO INSIDE CORNER OF FASCIA. ALL CLOSURE TRIM SHALL BE OF CONSISTENT DETAIL.
3. SHOW ALL FLASHING AND CLOSURE DETAILS ON SUBMITTAL FOR REVIEW AND APPROVAL. PROVIDE SOFFIT VENT DETAILS FOR REVIEW AND APPROVAL.
4. PROVIDE VENT PANEL/SYSTEM PER MANUFACTURER'S RECOMMENDATIONS. ALL CONCEALED SPACES SHALL BE VENTED.

ROOF EAVE DETAIL

DETAIL 4 / A03 — 1 1/2" = 1'-0"

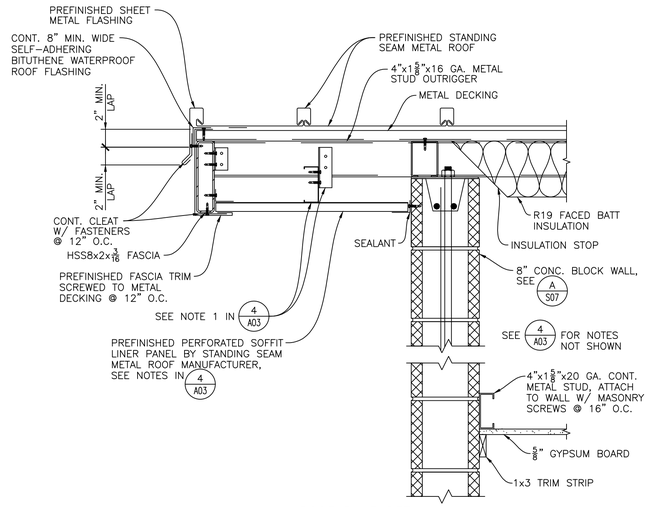

ROOF RAKE DETAIL

DETAIL 5 / A03 — 1 1/2" = 1'-0"

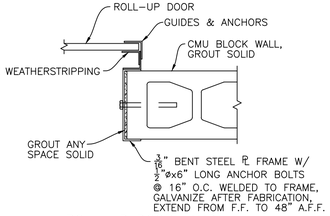

ROLL-UP DOOR JAMB

DETAIL 6 / A03 — 1 1/2" = 1'-0"

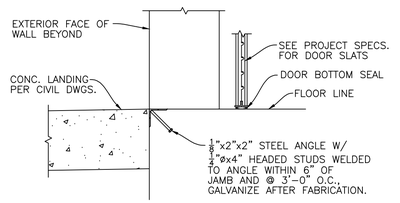

ROLL-UP DOOR THRESHOLD

DETAIL 7 / A03 — 1 1/2" = 1'-0"

LOUVER SCHEDULE

MARK	ROOM	WIDTH (IN.)	HEIGHT (IN.)	THICKNESS (IN.)	NET FREE AREA (SQFT)	WALL OPENING (IN. x IN.)	MAKE/MODEL	REMARKS
A	CHEMICAL/ PUMP ROOM	24	36	4	2.6	24 x 36	POTTORFF EBI-445 INTAKE AIR LOUVER	EXTRUDED ALUMINUM W/ INTEGRAL GRAVITY BACK DRAFT DAMPER BLADE TYPE, MATCH COLOR W/ ARCH. EXTERIOR DOOR COLOR, PROVIDE 1/4" BIRD SCREEN. LOUVERS MUST BE INSTALLED INSIDE THE EXTERIOR WALLS WITH NO LIP OR TRIM ON INTERIOR OR EXTERIOR WALL FACES.

PASE
408.957.9220 www.pase.com

Designer Stamp: REGISTERED PROFESSIONAL ENGINEER TIMOTHY E. ELLIOTT C 63260 S 4946 STRUCTURAL STATE OF CALIFORNIA 02/06/25

Record Drawings

Designer: _____ Date: _____
Public Works Inspector: _____ Date: _____
Utility/Facility Dept. Head: _____ Date: _____
Project Engineer: _____ Date: _____
Public Improvements Initially Accepted by the City Council on: _____ Res. No. _____

Drawn By: REM Date: 02/06/25
Checked By: TEE Date: 02/06/25
Designed By: TEE Date: 02/06/25

Revisions

Num.	Description	Engr. Aprv.	Date
1			

CITY OF MILPITAS
ENGINEERING DIVISION

McCANDLESS WELL FACILITY
PROJECT NO. 7076

ARCHITECTURAL DETAILS & SCHEDULES

RECOMMENDED FOR BIDDING BY: Lyhak Eam DATE: 2/7/2025
LYHAK EAM, P.E., Public Works Division Manager – Engineering

DWG NO. A03
PROJECT NO. 7076
Rec. Dwg No.
SCALE: AS SHOWN
SHEET 22 OF 70

Y:\Projects\23-DWGS\23-336 McCandless Well Facility\23-336A03.dwg 2/6/2025 9:43 AM telliott

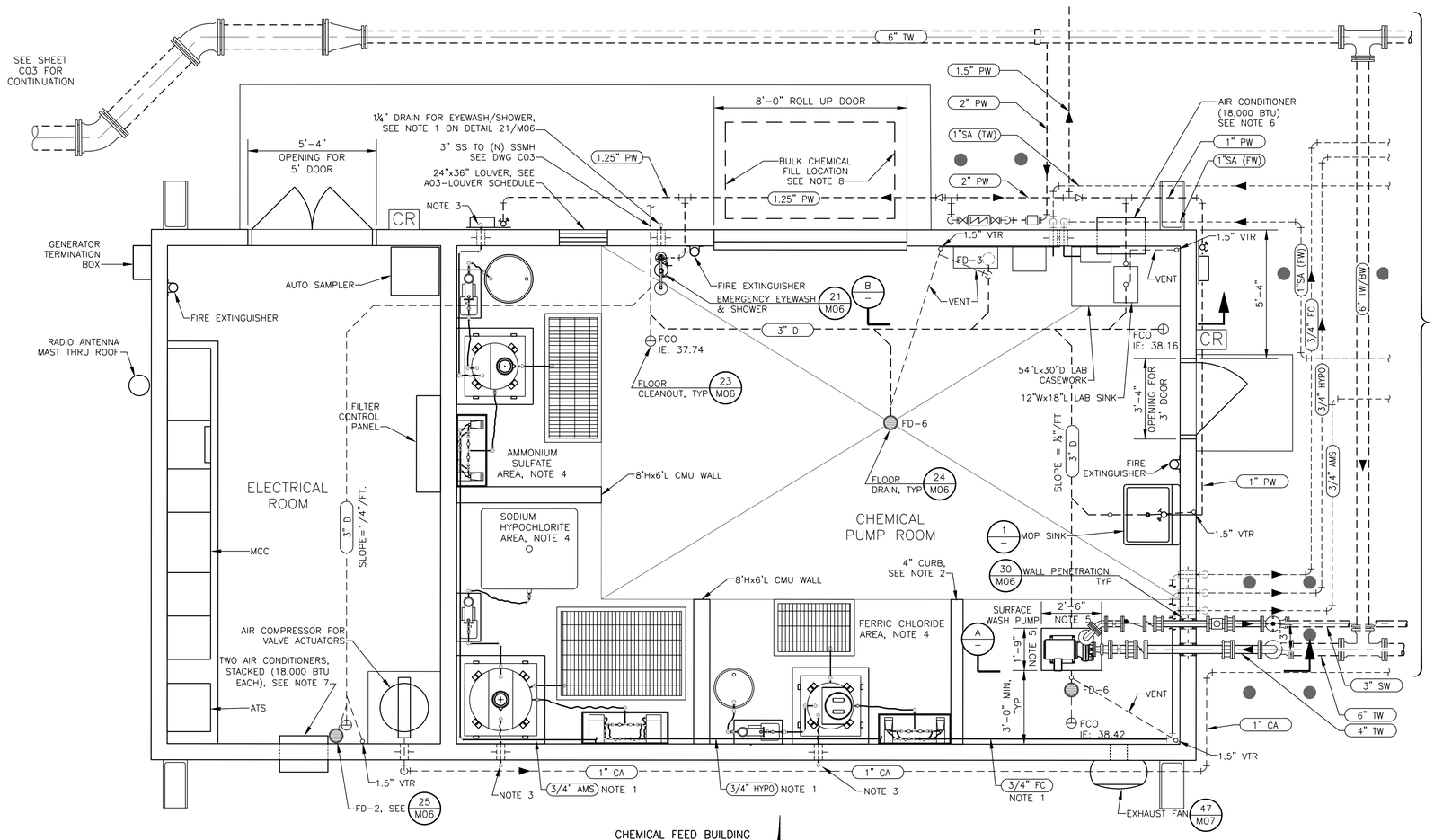

CHEMICAL FEED BUILDING

PLAN

SCALE: 3/8" = 1'-0"

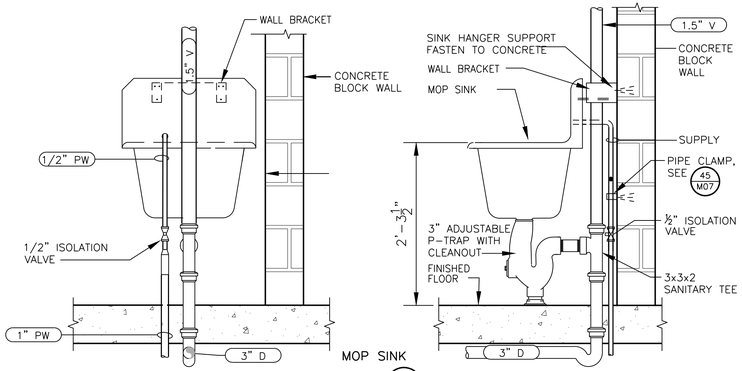

MOP SINK DETAIL 1 —

NOT TO SCALE

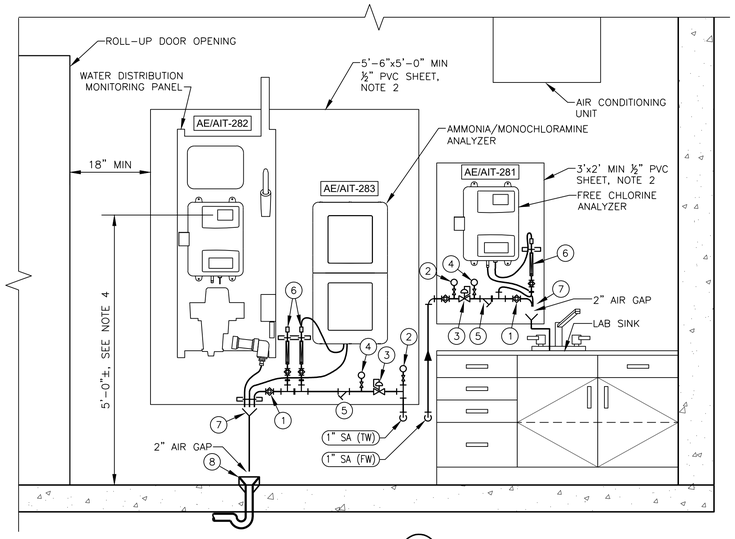

SECTION B —

SCALE: 3/4"=1'-0"

NOTES:
1. INSTALL ALL EQUIPMENT IN ACCORDANCE WITH MANUFACTURER'S INSTRUCTIONS. CONSULT EQUIPMENT MANUFACTURER FOR ALL EQUIPMENT INLET AND OUTLET SIZES AND CONNECTION DETAILS.
2. MOUNT PVC SHEET TO WALL WITH SST UNISTRUT AND SST ANCHORS.
3. PROVIDE SST STRUT SUPPORT FOR PIPING AND TUBING AS REQUIRED.
4. LOCATE PANELS SO THAT THE ANALYZER READ OUT IS APPROXIMATELY AT AVERAGE EYE LEVEL OF 5'-0".

LEGEND
1. BALL VALVE
2. PRESSURE GAUGE, 0-100 PSI
3. PRESSURE REDUCING VALVE
4. PRESSURE GAUGE, 0-30 PSI
5. Y-STRAINER
6. ADJUSTABLE ROTAMETER, 1-10 GPH
7. SAMPLE DRAIN
8. EQUIPMENT DRAIN, DETAIL 25/M06

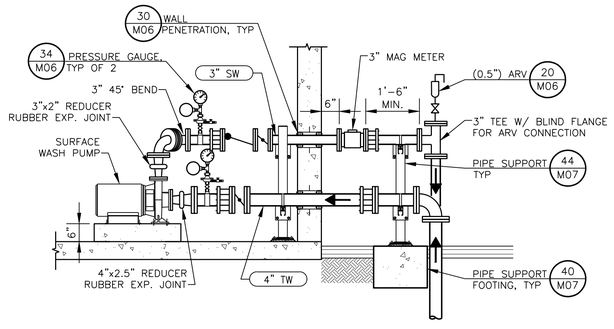

SURFACE WASH PUMP/WALL PENETRATION

SECTION A —

SCALE: 1/2" = 1'-0"

NOTES:
1. PROVIDE 3" DOUBLE CONTAINMENT PIPING FOR 3/4" CHEMICAL PIPES WITHIN THE BUILDING AND BURIED BELOW GRADE.
2. PAINT CURB FOR VISIBILITY. SEE SECTION 09900 FOR PAINT SYSTEM.
3. EXTEND CHEMICAL DAY TANK VENT TO BUILDING EXTERIOR. PROVIDE 1/4" MESH POLYETHYLENE SCREEN WITH LOCK RING.
4. SEE SHEET M05 FOR ENLARGED PLAN OF CHEMICAL AREAS.
5. SURFACE WASH PUMP CONCRETE PEDESTAL DIMENSIONS INDICATED FOR BIDDING PURPOSES. VERIFY FINAL DIMENSIONS WITH EQUIPMENT MANUFACTURER.
6. FIELD ROUTE CONDENSATE DRAIN FOR THE CHEMICAL ROOM AIR CONDITIONING UNIT TO FLOOR DRAIN FD-3.
7. FIELD ROUTE CONDENSATE DRAIN FOR THE ELECTRICAL ROOM AIR CONDITIONING UNITS TO FLOOR DRAIN FD-2.
8. CHEMICAL FILL FOR ALL TANKS IS TO OCCUR AT THE ENTRANCE LANDING ADJACENT TO THE ROLLUP DOOR AS INDICATED. IF SPILLAGE OCCURS DURING FILLING, SHUTOFF THE SUPPLY AND KEEP SPILLED CHEMICALS CONTAINED INSIDE BUILDING, WHERE SLOPED FLOOR AND DRAIN SYSTEM WILL CONVEY TO SANITARY SEWER SYSTEM.
9. PROVIDE ONE SPILL KIT, U-LINE PART #S-23399 OR APPROVED EQUAL.

VENTILATION AND INDOOR AIR QUALITY CALCULATIONS

SYSTEM NAME	SYSTEM DESIGN OA CFM AIRFLOW	SYSTEM DESIGN TRANSFER AIR CFM	OCCUPANCY TYPE	CONDITIONED FLOOR AREA (SF)	REQUIRED MIN. OA CFM	VENTILATION SYSTEM COMPLIES
CHEMICAL ROOM	1200	1200	ALL OTHERS	620	93	YES

WEST YOST
Water. Engineered.
6800 Koll Center Parkway
Suite 150
Pleasanton, CA 94566
(925) 426-2580
FAX (530) 756-5991

Designer Stamp:

REGISTERED PROFESSIONAL ENGINEER — JEFFREY WANTA — No. C60930 Exp. 12-31-26 — CIVIL — STATE OF CALIFORNIA

2/6/2025

Record Drawings

Designer: _____ Date: _____
Public Works Inspector: _____ Date: _____
Utility/Facility Dept. Head: _____ Date: _____
Project Engineer: _____ Date: _____
Public Improvements Initially Accepted by the City Council on: _____ Res. No. _____

Drawn By: ____ Date: ____
Checked By: ____ Date: ____
Designed By: ____ Date: ____

Revisions

Num.	Description	Engr. Aprv.	Date
1			

CITY OF MILPITAS
ENGINEERING DIVISION

McCANDLESS WELL FACILITY
PROJECT NO. 7076

CHEMICAL FEED BUILDING PLAN AND SECTIONS

RECOMMENDED FOR BIDDING BY: Lyhak Eam DATE: 2/7/2025
LYHAK EAM, P.E., Public Works Division Manager – Engineering

DWG NO. M01
PROJECT NO. 7076
Rec. Dwg No.
SCALE: AS SHOWN
SHEET 23 OF 70

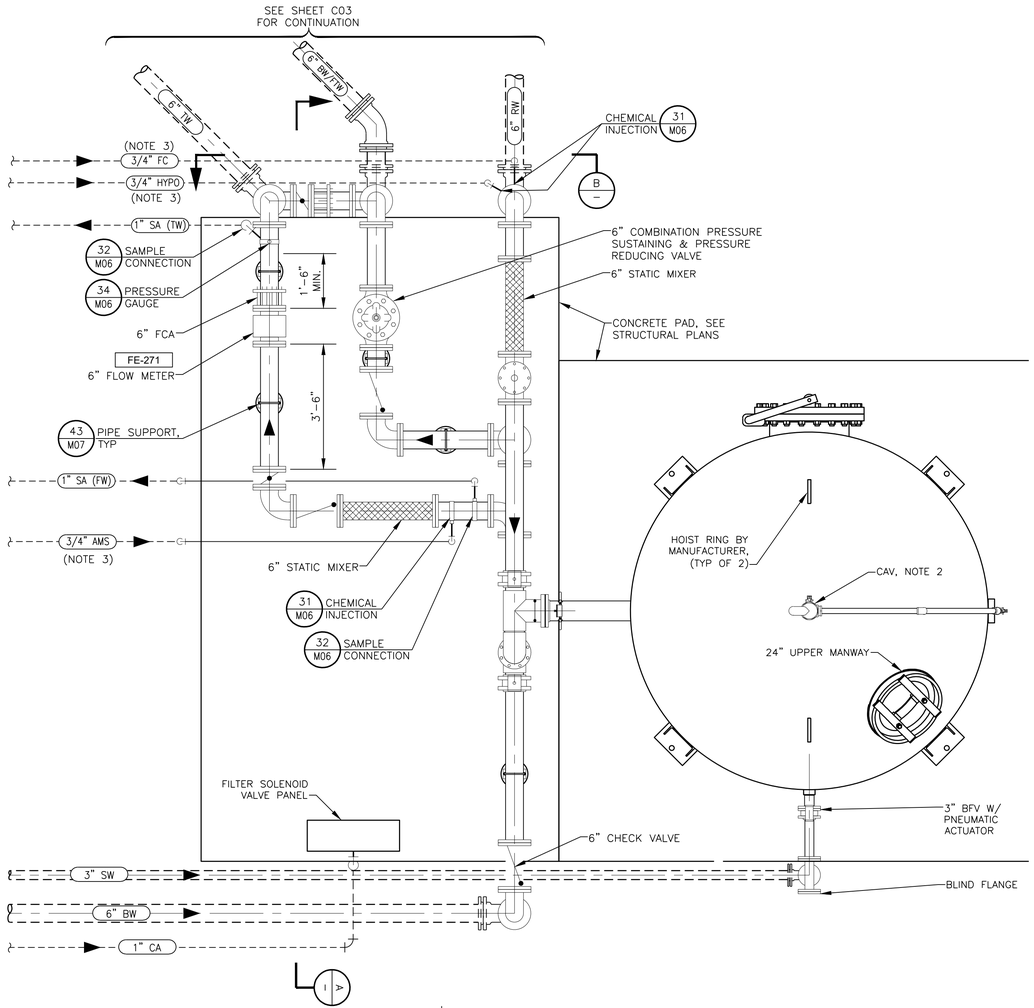

FILTER VESSEL

PLAN

SCALE: 1/2" = 1'-0"

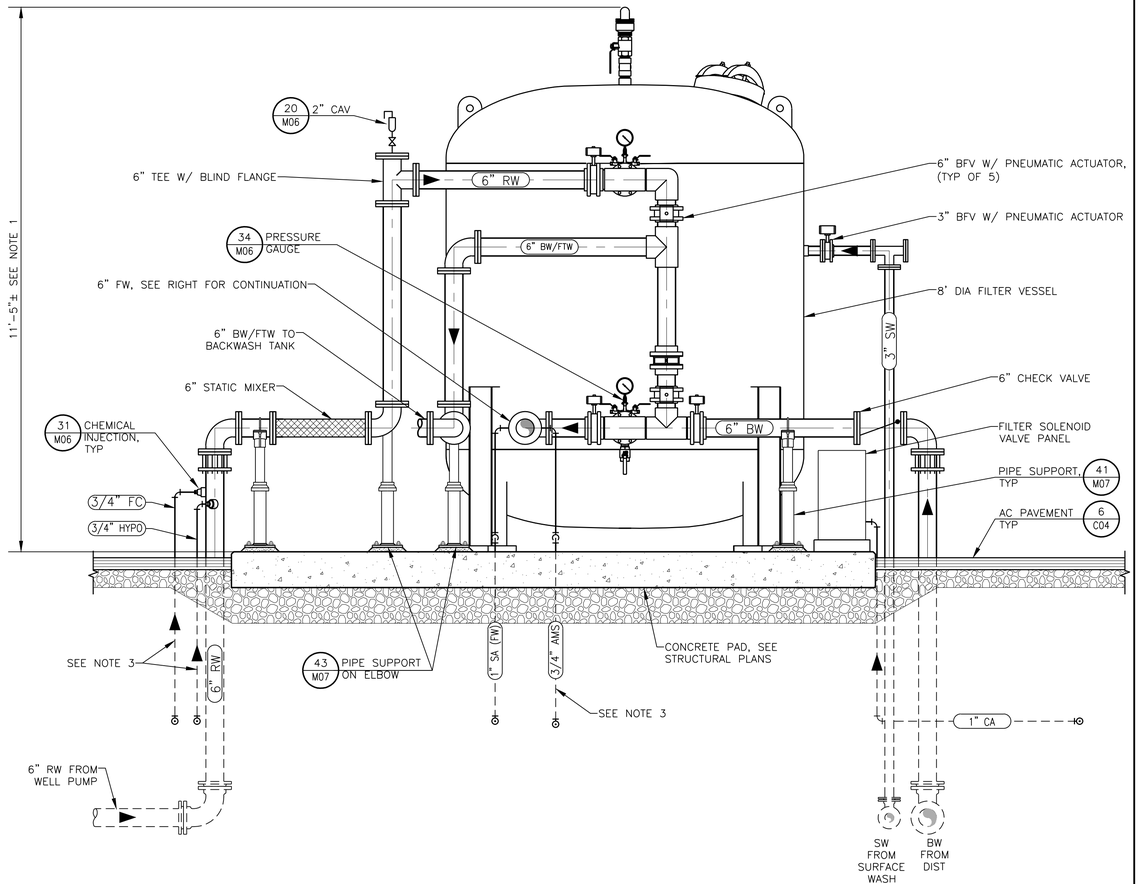

FILTER VESSEL – WEST END ELEVATION

SECTION A

SCALE: 1/2"=1'-0"

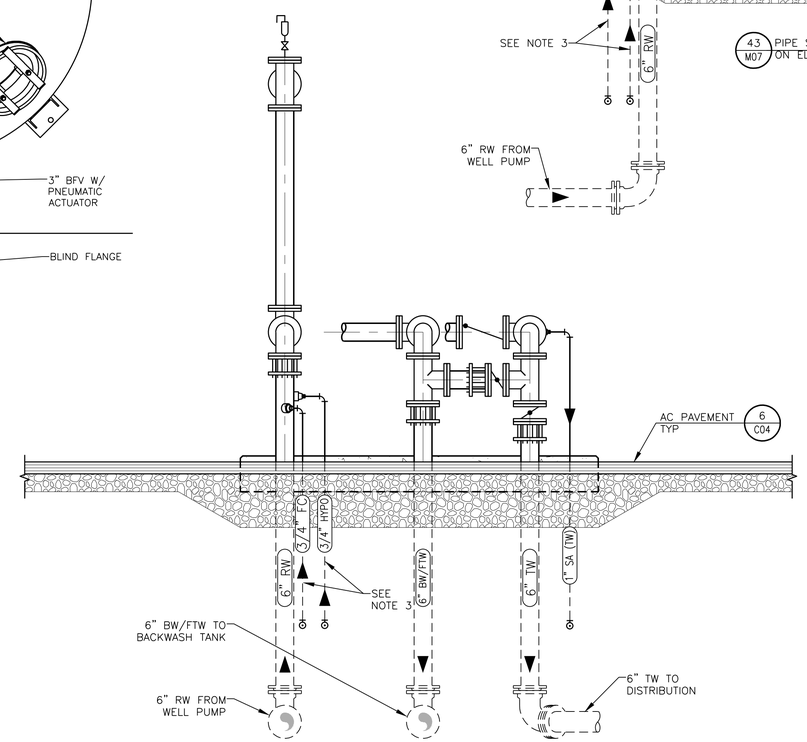

FILTER VESSEL – NORTH END ELEVATION

SECTION B

SCALE: 1/2"=1'-0"

NOTE:

1. THE DESIGN IS BASED ON THE EQUIPMENT OF THE FIRST-NAMED FILTER SYSTEM SUPPLIER. THE CONTRACTOR SHALL BE RESPONSIBLE FOR ANY REDESIGN RESULTING FROM SUPPLYING EQUIPMENT FROM A MANUFACTURER OTHER THAN THE FIRST-NAMED MANUFACTURER.
2. COMBINATION AIR VALVE INSTALLED ON FILTER VESSEL SHALL BE SIZED AND SUPPLIED BY THE FILTER SYSTEM SUPPLIER.
3. PROVIDE 3" DOUBLE CONTAINMENT PIPING FOR 3/4" CHEMICAL PIPES BURIED BELOW GRADE.

WEST YOST
Water. Engineered.
6800 Koll Center Parkway
Suite 150
Pleasanton, CA 94566
(925) 426-2580
FAX (530) 756-5991

Designer Stamp:

REGISTERED PROFESSIONAL ENGINEER
JEFFREY WANLASS
No. C60930
Exp. 12-31-26
CIVIL
STATE OF CALIFORNIA

2/6/2025

Record Drawings

Designer: _____ Date: _____
Public Works Inspector: _____ Date: _____
Utility/Facility Dept. Head: _____ Date: _____
Project Engineer: _____ Date: _____
Public Improvements Initially Accepted by the City Council on: _____ Res. No. _____

Drawn By: _____ Date: _____
Checked By: _____ Date: _____
Designed By: _____ Date: _____

Revisions

Num.	Description	Engr. Aprv.	Date
△			

CITY OF MILPITAS
ENGINEERING DIVISION

McCANDLESS WELL FACILITY
PROJECT NO. 7076

FILTER VESSEL PLAN & SECTIONS

RECOMMENDED FOR BIDDING BY: Lyhak Eam DATE: 2/7/2025
LYHAK EAM, P.E., Public Works Division Manager – Engineering

DWG NO. M02
PROJECT NO. 7076
Rec. Dwg No.
SCALE: ½"=1'-0"
SHEET 24 OF 70

N:\Clients\270 City of Milpitas\30-23-22 McCandless WE\CAD\Production\27030-2322-M01-M02.dwg 2-06-25 10:28:04 AM sbarber

TANK ACCESSORY LEGEND

ITEM	DESCRIPTION	ANGLE FROM DUE NORTH	℄ HEIGHT ABOVE TOP OF RING WALL	DETAIL
1	ROOF HATCH AND LADDER	110°	---	1/M04
2	ROOF VENT	CENTER	---	3/M04
3	30" MANWAY	30° & 210°	3'-0"	5/M04
4	TANK DRAIN	180°	0"	6/M04
5	10" OVERFLOW ASSEMBLY	270°	WEIR 11'-3"	7/M04
6	6" BW/FTW INLET	125°	16'-0"	8/M04 & SECTION A/M03
7	6" FL INLET	67°	16'-0"	8/M04 & SECTION B/M08

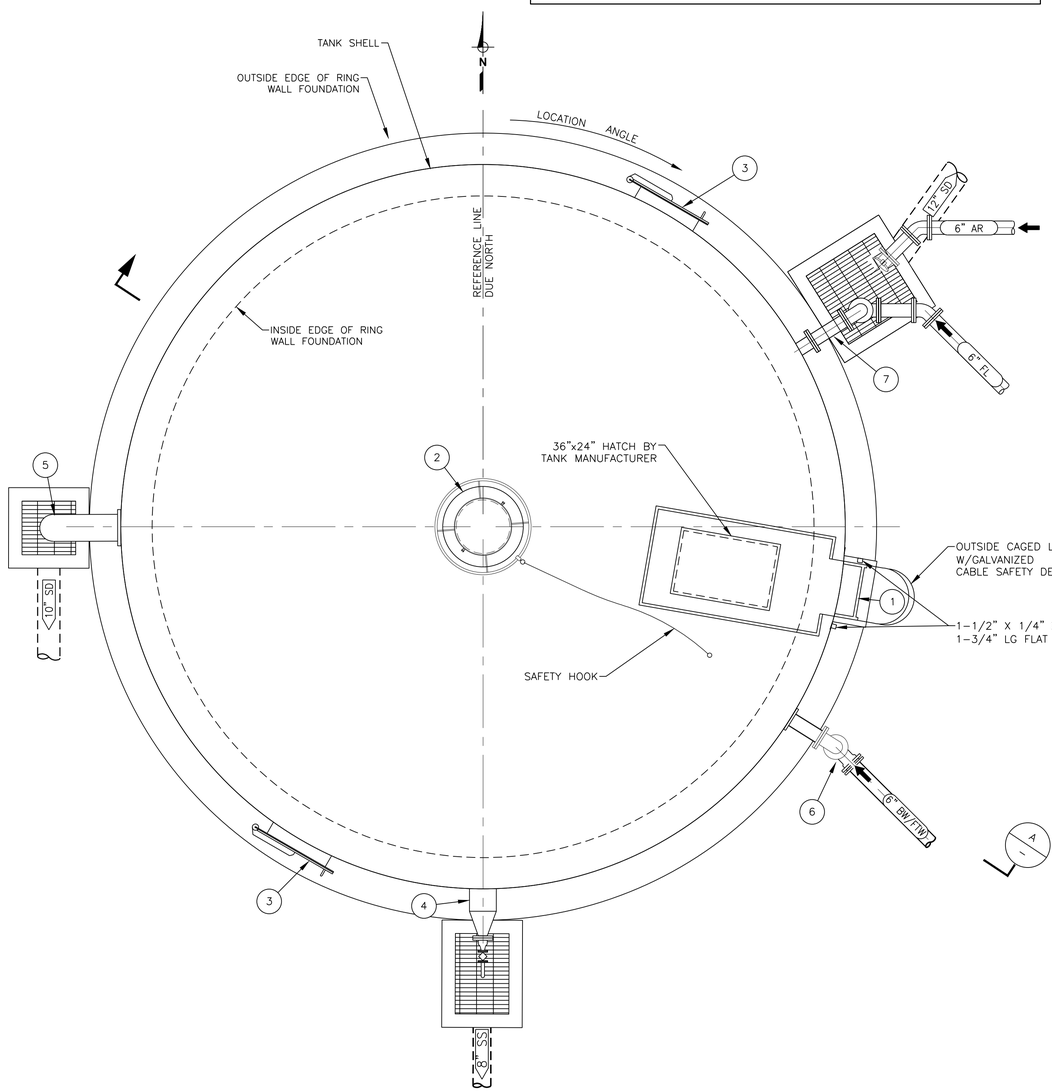

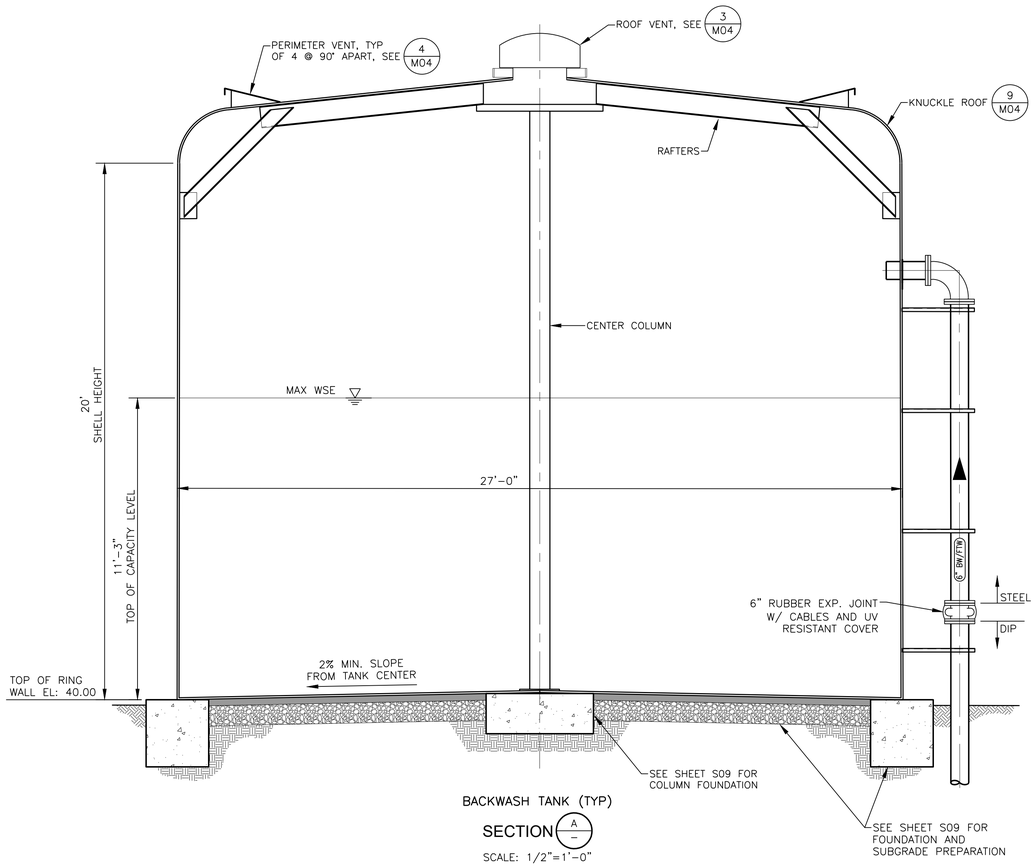

BACKWASH TANK (TYP)

SECTION A

SCALE: 1/2"=1'-0"

WEST YOST
Water. Engineered.
6800 Koll Center Parkway
Suite 150
Pleasanton, CA 94566
(925) 426-2580
FAX (530) 756-5991

Designer Stamp:

REGISTERED PROFESSIONAL ENGINEER
JEFFREY WANLASS
No. C60930
Exp. 12-31-26
CIVIL
STATE OF CALIFORNIA

2/6/2025

Record Drawings

Designer: _____ Date: _____

Public Works Inspector: _____ Date: _____

Utility/Facility Dept. Head: _____ Date: _____

Project Engineer: _____ Date: _____

Public Improvements Initially Accepted by the City Council on: _____ Res. No. _____

Drawn By: _____ Date: _____

Checked By: _____ Date: _____

Designed By: _____ Date: _____

Revisions

Num.	Description	Engr. Aprv.	Date
△			

CITY OF MILPITAS
ENGINEERING DIVISION

McCANDLESS WELL FACILITY
PROJECT NO. 7076

BACKWASH STORAGE TANK PLAN AND SECTIONS

RECOMMENDED FOR BIDDING BY: Lyhak Eam DATE: 2/7/2025
LYHAK EAM, P.E., Public Works Division Manager – Engineering

DWG NO. M03
PROJECT NO. 7076
Rec. Dwg No.
SCALE: AS SHOWN
SHEET 25 OF 70

N:\Clients\270 City of Milpitas\30-23-22 McCandless WE\CAD\Production\27030-2322-M03-M04.dwg 2-06-25 10:28:48 AM sbarber

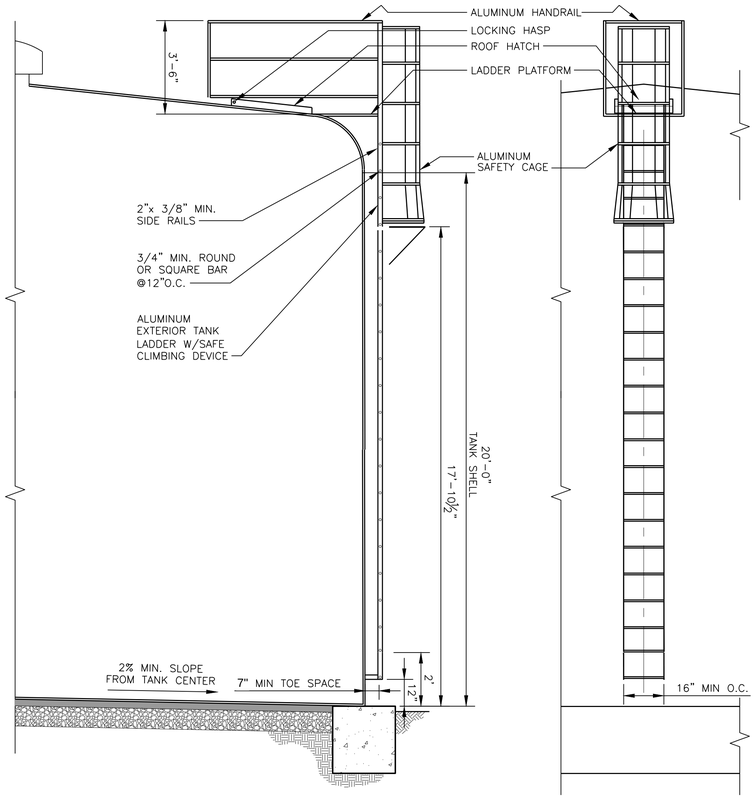

ROOF HATCH & LADDER

DETAIL 1/M04

SCALE: 1/2"=1'-0"

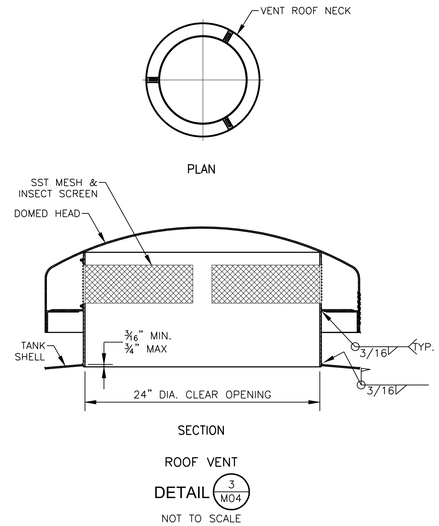

ROOF VENT

DETAIL 3/M04

NOT TO SCALE

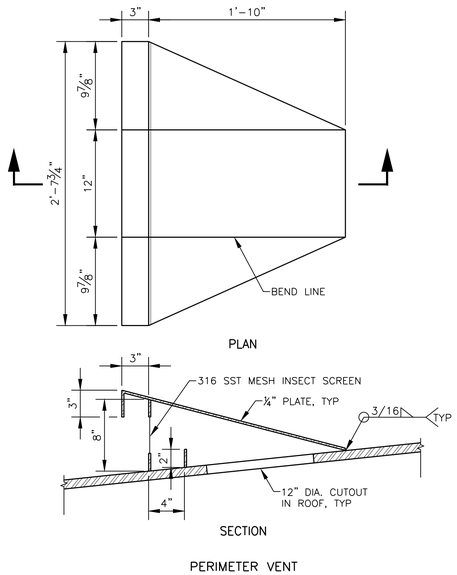

PERIMETER VENT

DETAIL 4/M04

NOT TO SCALE

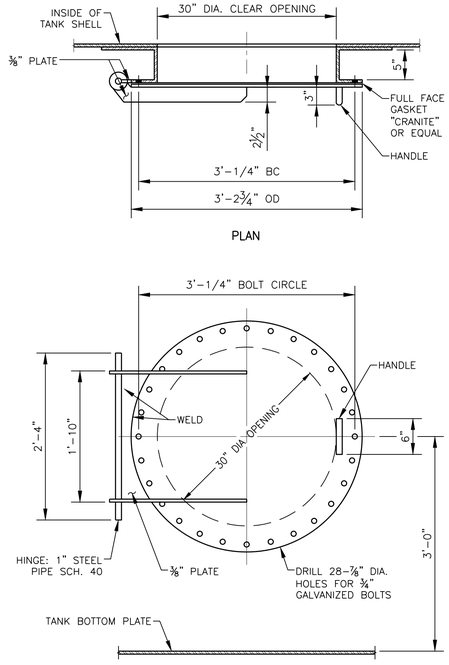

ACCESS MANWAY

DETAIL 5/M04

SCALE: 1"=1'-0"

GENERAL NOTES:
1. DETAILS SHOWN INDICATE GENERAL CONFIGURATION OF TANK APPURTENANCES. TANK MANUFACTURER SHALL DESIGN, DETAIL, AND SUBMIT FOR APPROVAL ALL TANK APPURTENANCES PER THE REQUIREMENTS OF THE SPECIFICATION

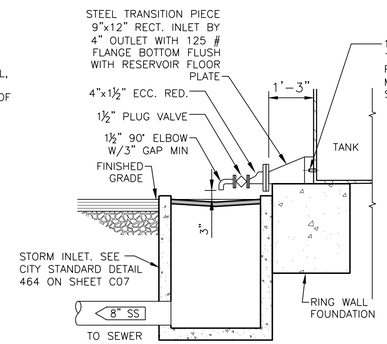

TANK DRAIN

DETAIL 6/M04

SCALE: 1/2"=1'-0"

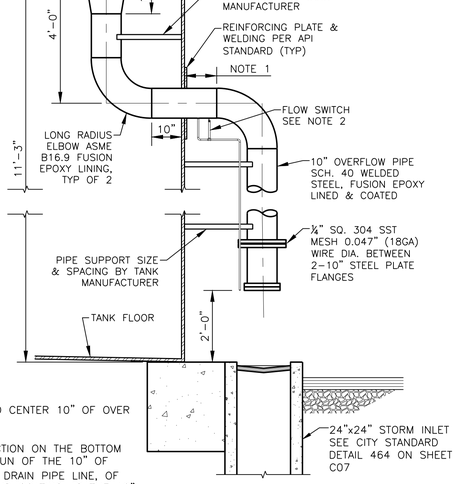

NOTES:
1. EXTEND AS NEEDED TO CENTER 10" OF OVER STORM INLET.
2. PROVIDE A ½" CONNECTION ON THE BOTTOM OF THE HORIZONTAL RUN OF THE 10" OF PIPE. CONNECT A ½" DRAIN PIPE LINE, OF THE SAME MATERIAL AND COATING AS THE 10" OF, FOR INSTALLATION OF THE FLOW SWITCH (FSH 372) TO DETECT TANK OVERFLOW. ROUTE THE DRAIN TO THE STORM INLET. PROVIDE PIPE SUPPORTS AS NEEDED FOR THE DRAIN LINE.

TANK OVERFLOW

DETAIL 7/M04

SCALE: 1/2"=1'-0"

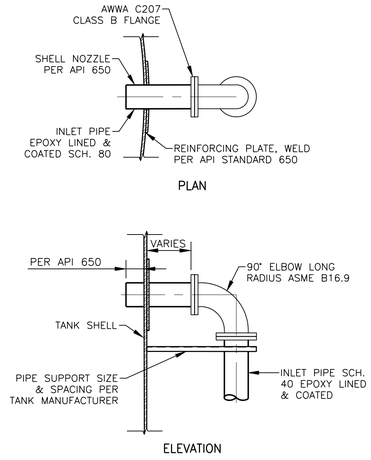

TANK INLET

DETAIL 8/M04

SCALE: 1/2"=1'-0"

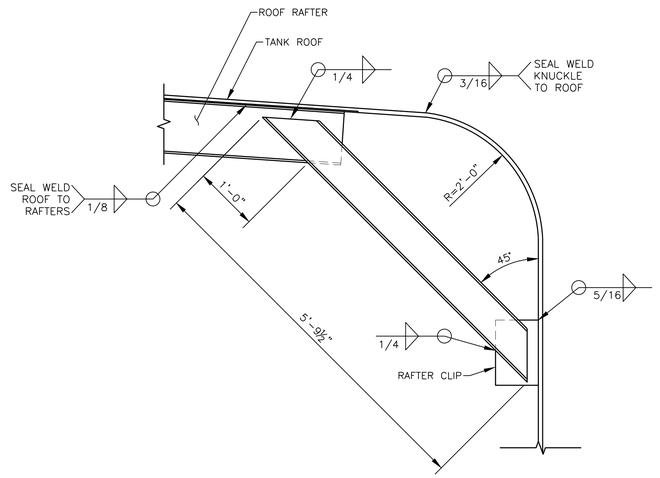

TANK KNUCKLE

DETAIL 9/M04

NOT TO SCALE

WEST YOST
Water. Engineered.
6800 Koll Center Parkway
Suite 150
Pleasanton, CA 94566
(925) 426-2580
FAX (530) 756-5991

Designer Stamp:

REGISTERED PROFESSIONAL ENGINEER — JEFFREY WANTZ — No. C60930 Exp. 12-31-26 — CIVIL — STATE OF CALIFORNIA

2/6/2025

Record Drawings

Designer: _____ Date: _____
Public Works Inspector: _____ Date: _____
Utility/Facility Dept. Head: _____ Date: _____
Project Engineer: _____ Date: _____
Public Improvements Initially Accepted by the City Council on: _____ Res. No. _____

Drawn By: ____ Date: ____
Checked By: ____ Date: ____
Designed By: ____ Date: ____

Revisions

Num.	Description	Engr. Aprv.	Date
1			

CITY OF MILPITAS
ENGINEERING DIVISION

McCANDLESS WELL FACILITY
PROJECT NO. 7076

BACKWASH STORAGE TANK DETAILS

RECOMMENDED FOR BIDDING BY: Lyhak Eam DATE: 2/7/2025
LYHAK EAM, P.E., Public Works Division Manager – Engineering

DWG NO. M04
PROJECT NO. 7076
Rec. Dwg No.
SCALE: AS SHOWN
SHEET 26 OF 70

N:\Clients\X270 City of Milpitas\X0-23-22 McCandless WF\CAD\Production\X2703O-2322-M03-M04.dwg 2-06-25 02:58:31 PM stoehner

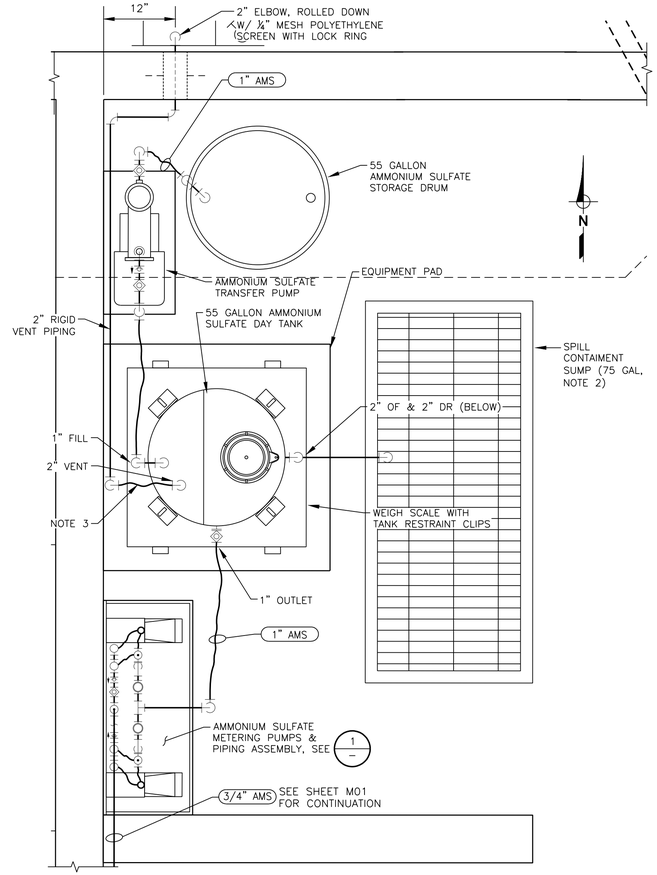

AMMONIUM SULFATE CHEMICAL AREA

PLAN

SCALE: 1"=1'-0"

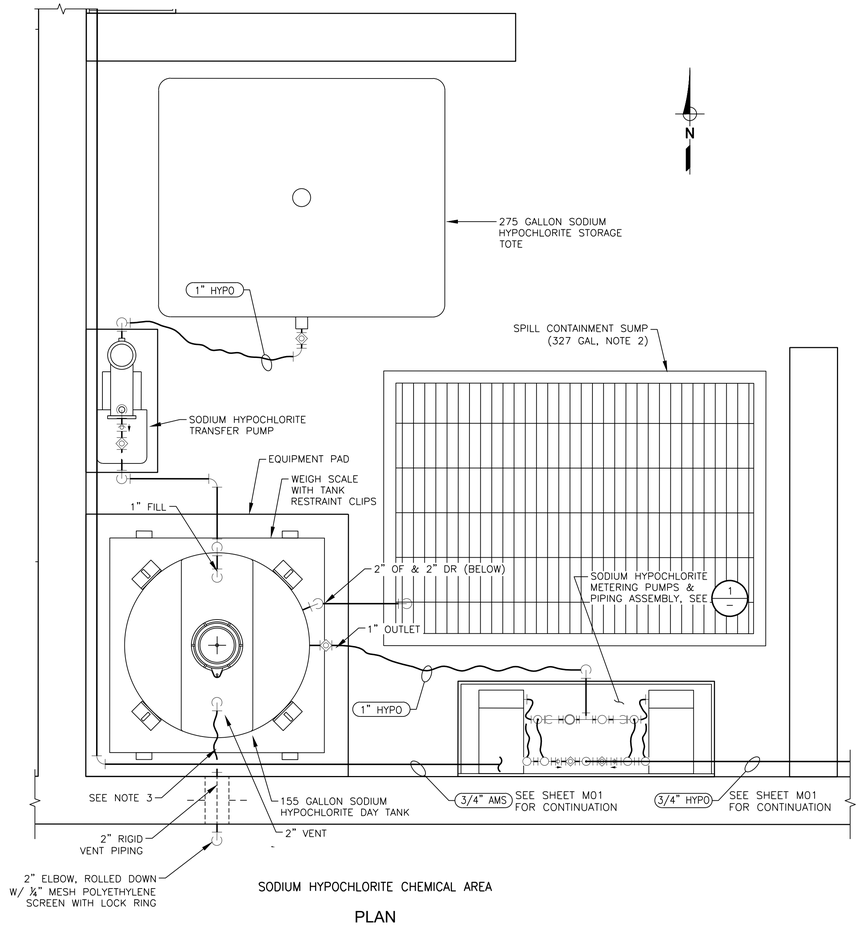

SODIUM HYPOCHLORITE CHEMICAL AREA

PLAN

SCALE: 1"=1'-0"

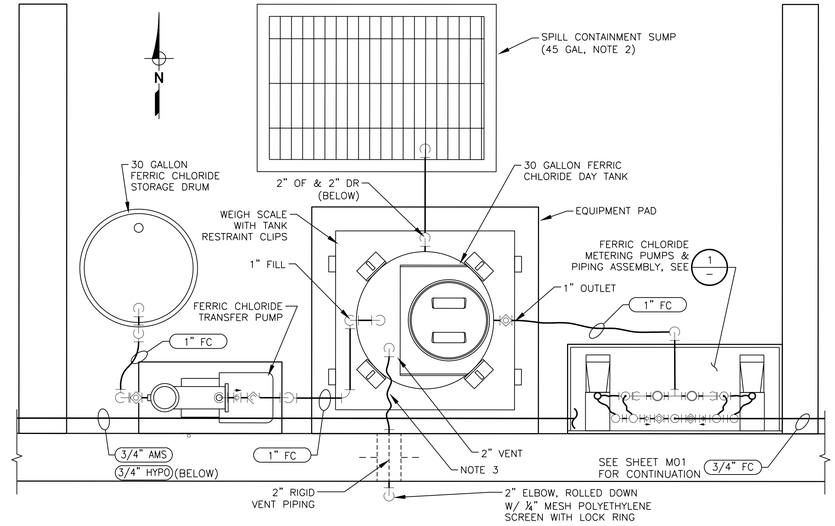

FERRIC CHLORIDE CHEMICAL AREA

PLAN

SCALE: 1"=1'-0"

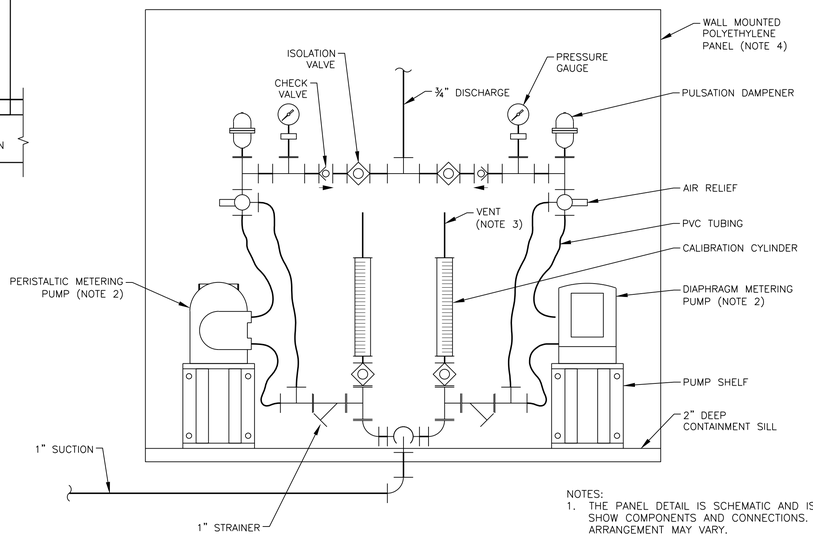

METERING PUMPS AND PIPING ASSEMBLY

DETAIL 1/—

NOT TO SCALE

NOTES:

1. COAT CHEMICAL AREA FLOOR, SPILL CONTAINMENT SUMP, WALLS AND FLOOR, AND CONCRETE PADS IN CHEMICAL STORAGE AREAS WITH CONTAINMENT COATING. SEE SECTION 09960.
2. PROVIDE FRP GRATING OVER SPILL CONTAINMENT SUMPS. SEE SECTION 13237.
3. PROVIDE 2" PVC TUBING TO CONNECT 2" TANK VENT TO RIGID VENT EXTENSION PIPING TO BUILDING EXTERIOR.
4. SUPPORT AMS, HYPO, AND FC PIPING TO CMU WALL IN ACCORDANCE WITH SECTIONS 15060 AND 15097, AND PER DETAIL 45/M07

NOTES:

1. THE PANEL DETAIL IS SCHEMATIC AND IS INTENDED TO SHOW COMPONENTS AND CONNECTIONS. ACTUAL ARRANGEMENT MAY VARY.
2. PROVIDE DIAPHRAGM METERING PUMPS FOR FERRIC CHLORIDE AND AMMONIUM SULFATE SYSTEMS. PROVIDE PERISTALTIC METERING PUMPS FOR SODIUM HYPOCHLORITE SYSTEM.
3. EXTEND VENT PIPE TO AN ELEVATION ABOVE THE TOP OF THE CHEMICAL DAY TANK.
4. MOUNT PANEL SECURELY TO WALL WITH BOTTOM AT 2'-6" ABOVE FINISHED FLOOR.
5. SECURE PIPING & APPURTENANCES TO PANEL WITH CLAMPS, STRAPS, SUPPORTS AND STANDS.

WEST YOST
Water. Engineered.

6800 Koll Center Parkway
Suite 150
Pleasanton, CA 94566
(925) 426-2580
FAX (530) 756-5991

Designer Stamp:

REGISTERED PROFESSIONAL ENGINEER — JEFFREY WANTY — No. C60930 — Exp. 12-31-26 — CIVIL — STATE OF CALIFORNIA

2/6/2025

Record Drawings

Designer: _____ Date: _____

Public Works Inspector: _____ Date: _____

Utility/Facility Dept. Head: _____ Date: _____

Project Engineer: _____ Date: _____

Public Improvements Initially Accepted by the City Council on: _____ Res. No. _____

Drawn By: ____ Date: ____

Checked By: ____ Date: ____

Designed By: ____ Date: ____

Revisions

Num.	Description	Engr. Aprv.	Date
1			

CITY OF MILPITAS — CALIFORNIA — JANUARY 24, 1954

CITY OF MILPITAS
ENGINEERING DIVISION

McCANDLESS WELL FACILITY
PROJECT NO. 7076

CHEMICAL FEED SYSTEM PLANS AND DETAILS

RECOMMENDED FOR BIDDING BY: *Lyhak Eam* DATE: 2/7/2025
LYHAK EAM, P.E., Public Works Division Manager – Engineering

DWG NO. M05
PROJECT NO. 7076
Rec. Dwg No.
SCALE: AS SHOWN
SHEET 27 OF 70

S:\Clients\2270 City of Milpitas\50-23-24 McCandless WFS\CAD\Production\2270.50-2322-M05.dwg 2-06-25 10:29:55 AM tbarker

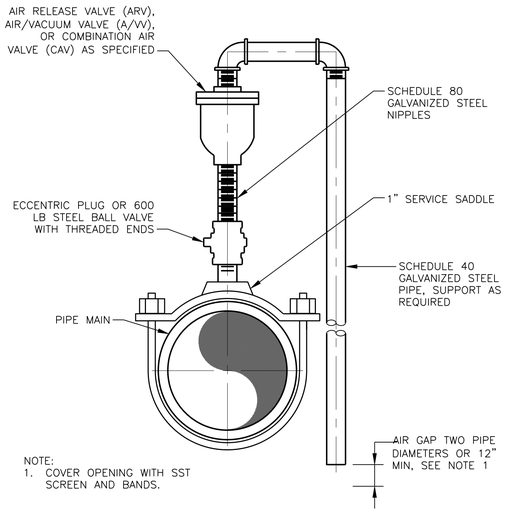

AIR RELEASE VALVE (ARV), AIR/VACUUM VALVE (A/VV), OR COMBINATION AIR VALVE (CAV)

DETAIL 20/M06

NOT TO SCALE

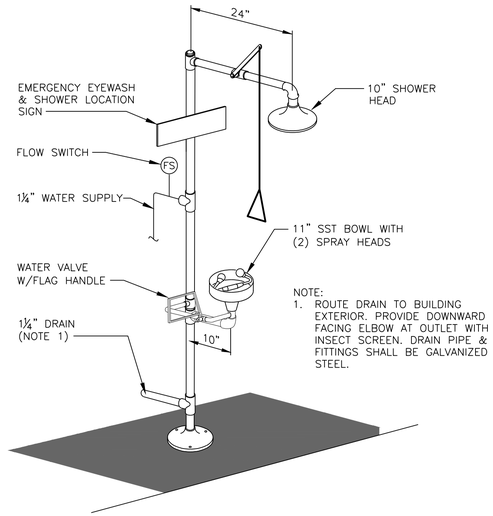

EMERGENCY EYEWASH AND SHOWER

DETAIL 21/M06

NOT TO SCALE

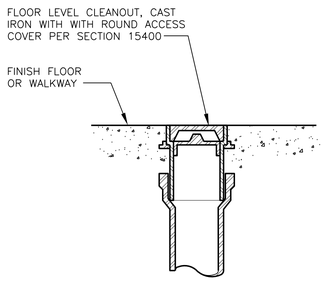

FLOOR CLEANOUT (FCO)

DETAIL 23/M06

NOT TO SCALE

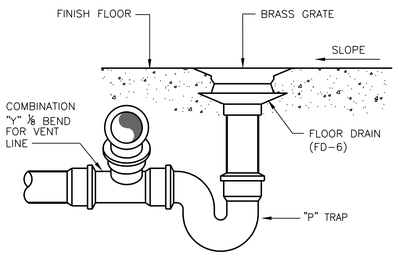

FLOOR DRAIN

DETAIL 24/M06

NOT TO SCALE

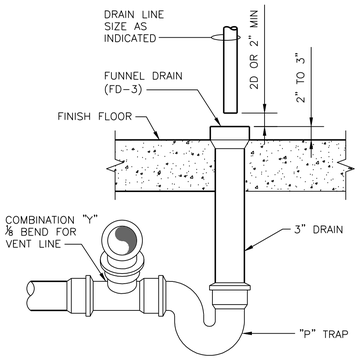

EQUIPMENT DRAIN

DETAIL 25/M06

NOT TO SCALE

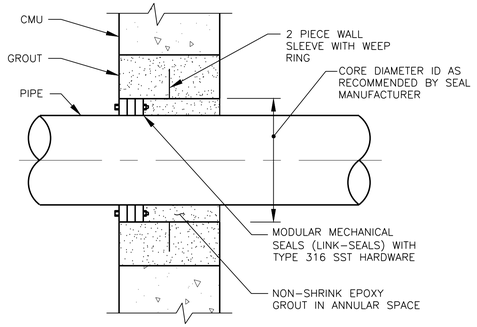

WALL PENETRATION

DETAIL 30/M06

NOT TO SCALE

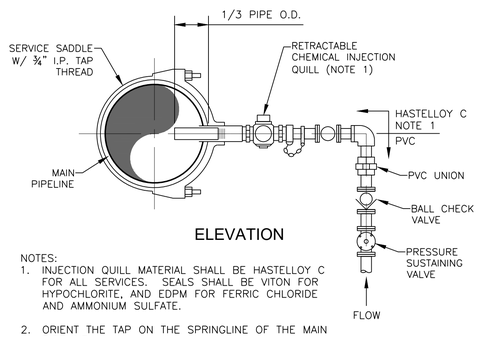

NOTES:
1. INJECTION QUILL MATERIAL SHALL BE HASTELLOY C FOR ALL SERVICES. SEALS SHALL BE VITON FOR HYPOCHLORITE, AND EDPM FOR FERRIC CHLORIDE AND AMMONIUM SULFATE.
2. ORIENT THE TAP ON THE SPRINGLINE OF THE MAIN PIPELINE.

CHEMICAL INJECTION

DETAIL 31/M06

NOT TO SCALE

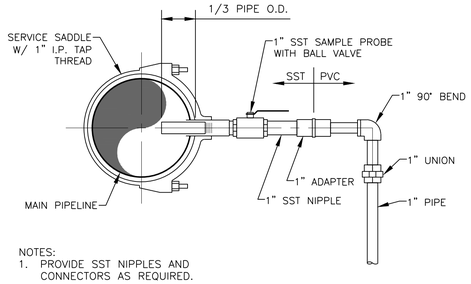

NOTES:
1. PROVIDE SST NIPPLES AND CONNECTORS AS REQUIRED.

SAMPLE CONNECTION

DETAIL 32/M06

NOT TO SCALE

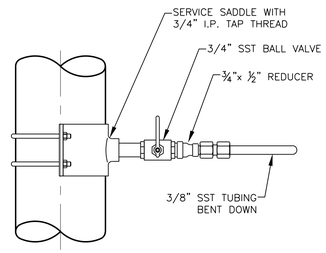

SAMPLE TAP

DETAIL 33/M06

NOT TO SCALE

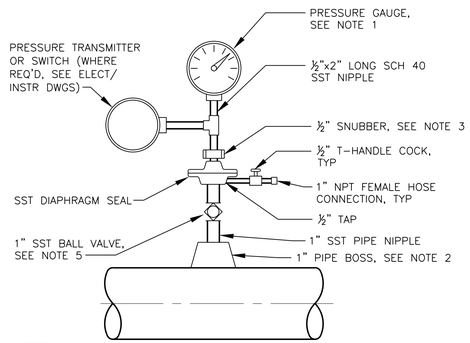

NOTES:
1. FOR GAUGE AND APPURTENANCES DETAILS, SEE SPEC. SECTION 15110.
2. USE BOSS FOR FABRICATED STEEL PIPE. SUBSTITUTE SS PIPE SADDLE FOR DIP OR PVC PIPE.
3. WHERE REQUIRED BY SCHEDULE IN SPEC SECTION 15110.
4. THIS DETAIL FOR LIQUID SERVICE ONLY, UNLESS OTHERWISE SPECIFIED.
5. IF NO PRESSURE SWITCH OR TRANSMITTER, BOSS, NIPPLE AND VALVE MAY BE 1/2".

PRESSURE GAGE

DETAIL 34/M06

NOT TO SCALE

WEST YOST
Water. Engineered.
6800 Koll Center Parkway
Suite 150
Pleasanton, CA 94566
(925) 426-2580
FAX (530) 756-5991

Designer Stamp:

REGISTERED PROFESSIONAL ENGINEER — JEREY WANG — No. C60930 — Exp. 12-31-26 — CIVIL — STATE OF CALIFORNIA

2/6/2025

Record Drawings

Designer: _____ Date: _____

Public Works Inspector: _____ Date: _____

Utility/Facility Dept. Head: _____ Date: _____

Project Engineer: _____ Date: _____

Public Improvements Initially Accepted by the City Council on: _____ Res. No. _____

Drawn By: ____ Date: _____

Checked By: ____ Date: _____

Designed By: ____ Date: _____

Revisions

Num.	Description	Engr. Aprv.	Date
1			

CITY OF MILPITAS
ENGINEERING DIVISION

McCANDLESS WELL FACILITY
PROJECT NO. 7076

MECHANICAL DETAILS 1

RECOMMENDED FOR BIDDING BY: Lyhak Eam DATE: 2/7/2025
LYHAK EAM, P.E., Public Works Division Manager – Engineering

DWG NO. M06
PROJECT NO. 7076
Rec. Dwg No.
SCALE: AS SHOWN
SHEET 28 OF 70

I:\Clients\2970 City of Milpitas\30-23-22 McCandless WF\CAD\Production\27030-2322-M06.dwg 2-06-25 10:31:05 AM stevenr

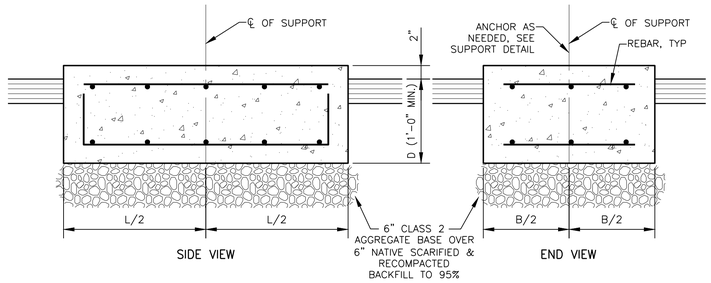

PIPE SIZE	FOOTING			REBAR	REMARKS
	DIMENSIONS				
	B	L	D		
4" TO 6"	1'-6"	2'-6"	1'-2"	#4 @ 12" EACH WAY (SEE SECTIONS)	FOR STEEL PLATE, ANCHOR BOLTS & CONNECTIONS. SEE PIPE SUPPORT DETAIL
8" TO 10"	1'-6"	3'-0"	1'-2"		
12" TO 16"	2'-0"	3'-6"	1'-4"		
18" TO 20"	2'-0"	4'-0"	1'-4"		
24"	2'-6"	4'-6"	1'-4"		

PIPE SUPPORT FOOTING

DETAIL 40 / M07

NOT TO SCALE

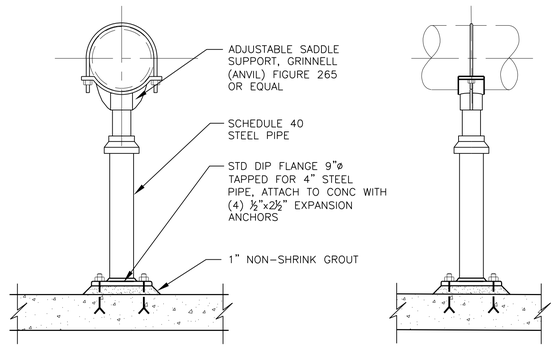

PIPE SUPPORT (SADDLE)

DETAIL 41 / M07

NOT TO SCALE

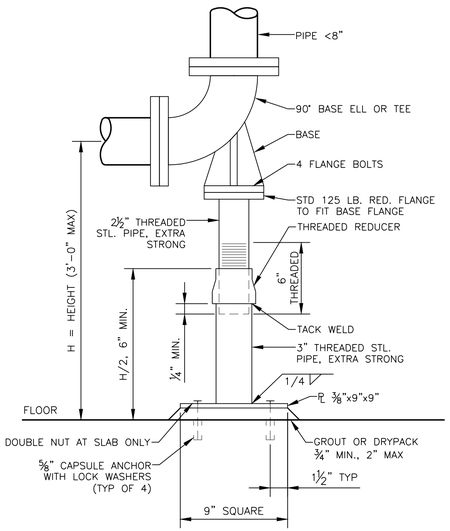

NOTES:
1. AS AN ALTERNATE, IF ADJUSTMENT IS NOT NECESSARY, DELETE 2½" STEEL PIPE AND SCREW 3" STEEL PIPE DIRECTLY TO REDUCING FLANGE.
2. DO NOT CUT OR WELD AFTER GALVANIZING.

PIPE SUPPORT (BASE MOUNTED)

DETAIL 43 / M07

NOT TO SCALE

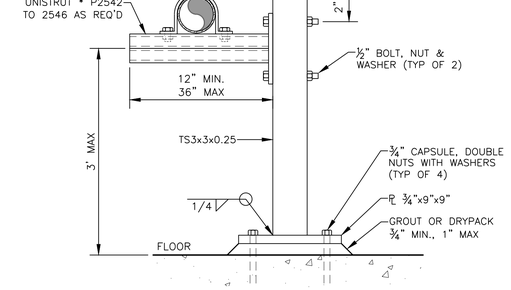

MAX. LOAD LIMITS (ALL ON ONE SIDE ONLY	
NUMBER OF PIPES	PIPE SIZE
1	6"
4	4"
5	<4"

NOTE:
BOTH SIDES OF PIPE SUPPORT MAY BE LOADED PROVIDED THE NUMBER OF PIPES PER SIDE IS NOT EXCEEDED.

* OR KIN-LINE, INC., OR EQUAL.

PIPE SUPPORT (SIDE SUPPORT)

DETAIL 44 / M07

NOT TO SCALE

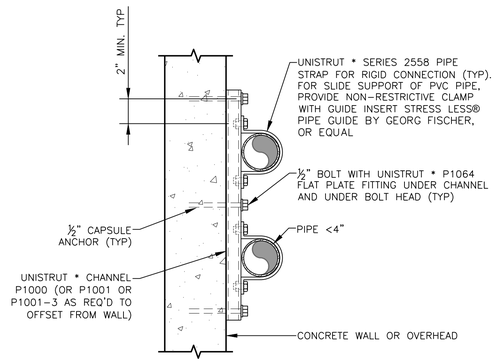

NOTE:
ADD ADDITIONAL CAPSULE ANCHOR FOR EACH ADDITIONAL PIPE.

* OR KIN-LINE, INC., OR EQUAL.

PIPE SUPPORT (WALL MOUNTED)

DETAIL 45 / M07

NOT TO SCALE

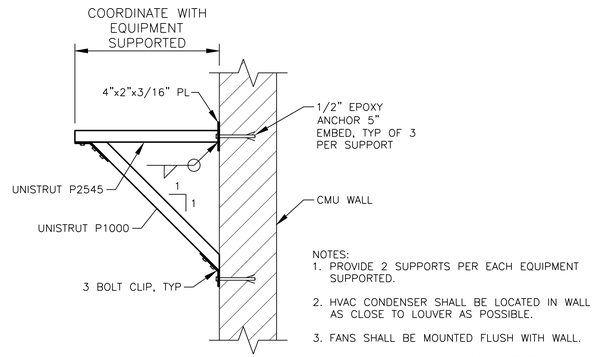

NOTES:
1. PROVIDE 2 SUPPORTS PER EACH EQUIPMENT SUPPORTED.
2. HVAC CONDENSER SHALL BE LOCATED IN WALL AS CLOSE TO LOUVER AS POSSIBLE.
3. FANS SHALL BE MOUNTED FLUSH WITH WALL.
4. PROVIDE VIBRATION ISOLATION BETWEEN EQUIPMENT AND SUPPORT.

VENTILATION EQUIPMENT SUPPORT

DETAIL 46 / M07

NOT TO SCALE

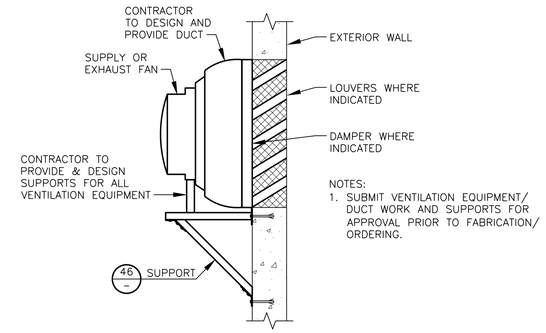

NOTES:
1. SUBMIT VENTILATION EQUIPMENT/ DUCT WORK AND SUPPORTS FOR APPROVAL PRIOR TO FABRICATION/ ORDERING.

VENTILATION EQUIPMENT

DETAIL 47 / M07

NOT TO SCALE

WEST YOST
Water. Engineered.

6800 Koll Center Parkway
Suite 150
Pleasanton, CA 94566
(925) 426-2580
FAX (530) 756-5991

Designer Stamp:

REGISTERED PROFESSIONAL ENGINEER — JEFFREY WANG — No. C60930 Exp. 12-31-26 — CIVIL — STATE OF CALIFORNIA

2/6/2025

Record Drawings

Designer: _____ Date: _____

Public Works Inspector: _____ Date: _____

Utility/Facility Dept. Head: _____ Date: _____

Project Engineer: _____ Date: _____

Public Improvements Initially Accepted by the City Council on: _____ Res. No. _____

Drawn By: ____ Date: _____

Checked By: ____ Date: _____

Designed By: ____ Date: _____

Revisions

Num.	Description	Engr. Aprv.	Date
1			

CITY OF MILPITAS
ENGINEERING DIVISION

McCANDLESS WELL FACILITY
PROJECT NO. 7076

MECHANICAL DETAILS 2

RECOMMENDED FOR BIDDING BY: Lyhak Eam DATE: 2/7/2025
LYHAK EAM, P.E., Public Works Division Manager – Engineering

DWG NO. M07
PROJECT NO. 7076
Rec. Dwg No.
SCALE: AS SHOWN
SHEET 29 OF 70

N:\Cmanis\2710 City of Milpitas\30-23-22 McCandless WEL\CAD\Production\27030-2322-M07.dwg 2-06-25 10:31:48 AM tlowther

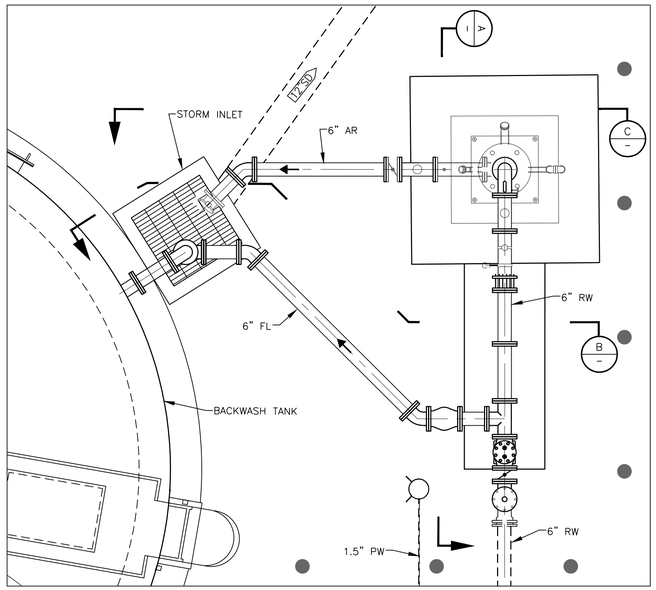

WELL AND DISCHARGE PIPING

PLAN

SCALE: 3/8"=1'-0"

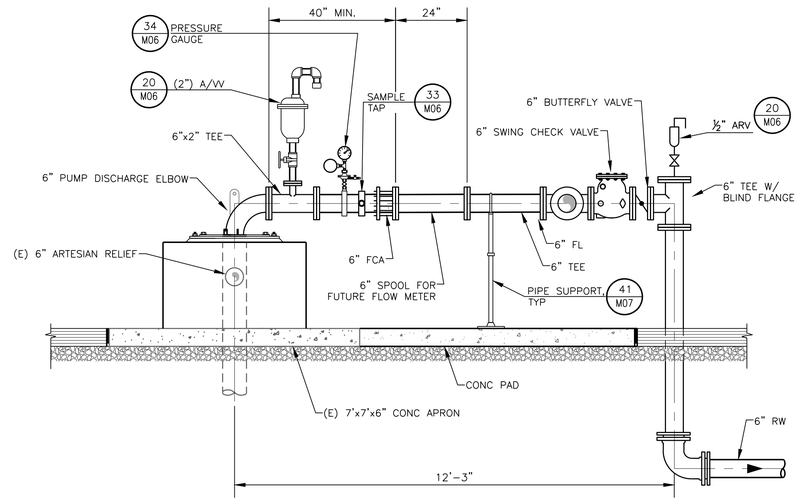

WELL DISCHARGE PIPING

SECTION A

SCALE: 1/2"=1'-0"

NOTE:
1. PROVIDE PIPE SUPPORT FOOTING PER 40 M07
2. LOCATE 6" AR DISCHARGE OVER STORM INLET. PROVIDE FLAP VALVE TO DIRECT DISCHARGE DOWN INTO STORM INLET.

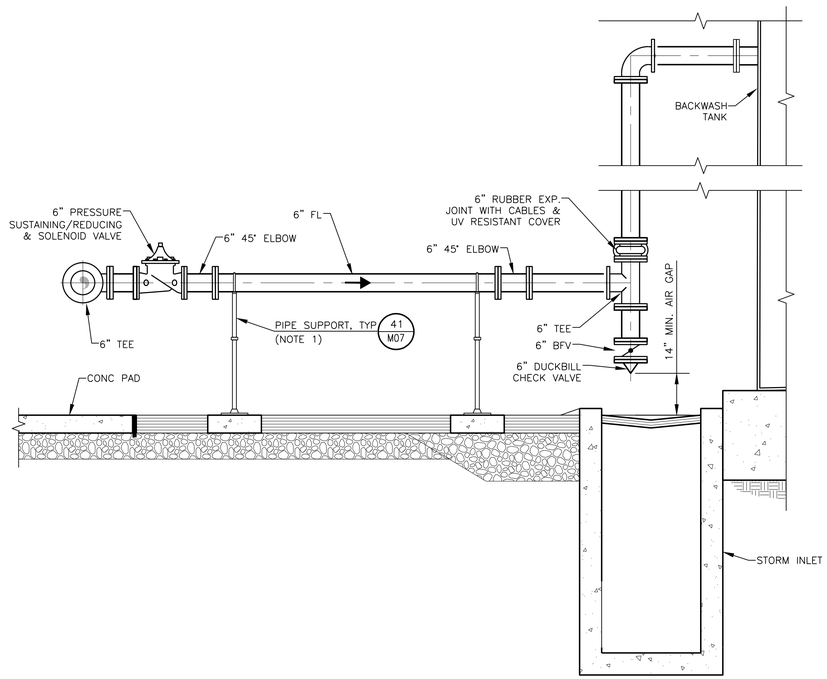

WELL FLUSH PIPING

SECTION B

SCALE: 1/2"=1'-0"

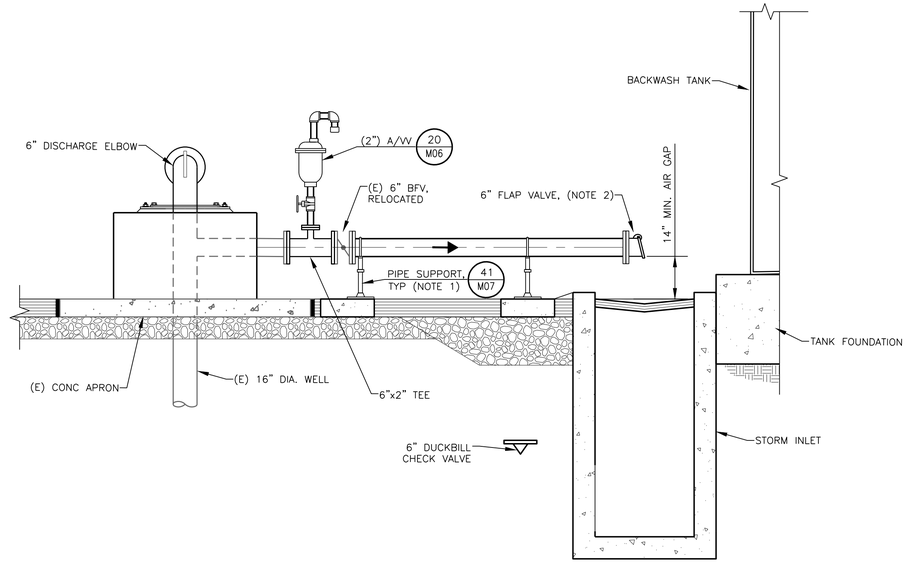

ARTESIAN RELIEF

SECTION C

SCALE: 1/2"=1'-0"

WEST YOST
Water. Engineered.
6800 Koll Center Parkway
Suite 150
Pleasanton, CA 94566
(925) 426-2580
FAX (530) 756-5991

Designer Stamp:

REGISTERED PROFESSIONAL ENGINEER
JEFFREY WANDER
No. C60930
Exp. 12-31-26
CIVIL
STATE OF CALIFORNIA

2/6/2025

Record Drawings

Designer: _____ Date: _____
Public Works Inspector: _____ Date: _____
Utility/Facility Dept. Head: _____ Date: _____
Project Engineer: _____ Date: _____
Public Improvements Initially Accepted by the City Council on: _____ Res. No. _____

Drawn By: _____ Date: _____
Checked By: _____ Date: _____
Designed By: _____ Date: _____

Revisions

Num.	Description	Engr. Aprv.	Date
△			

CITY OF MILPITAS
ENGINEERING DIVISION

McCANDLESS WELL FACILITY
PROJECT NO. 7076

WELL HEAD PLAN AND SECTIONS

RECOMMENDED FOR BIDDING BY: Lyhak Eam DATE: 2/7/2025
LYHAK EAM, P.E., Public Works Division Manager – Engineering

DWG NO. M08
PROJECT NO. 7076
Rec. Dwg No.
SCALE: AS SHOWN
SHEET 30 OF 70

N:\Clients\270 City of Milpitas\30-23-22 McCandless WE\CAD\Production\27030-2322-M08.dwg 2-06-25 10:32:19 AM sbarber

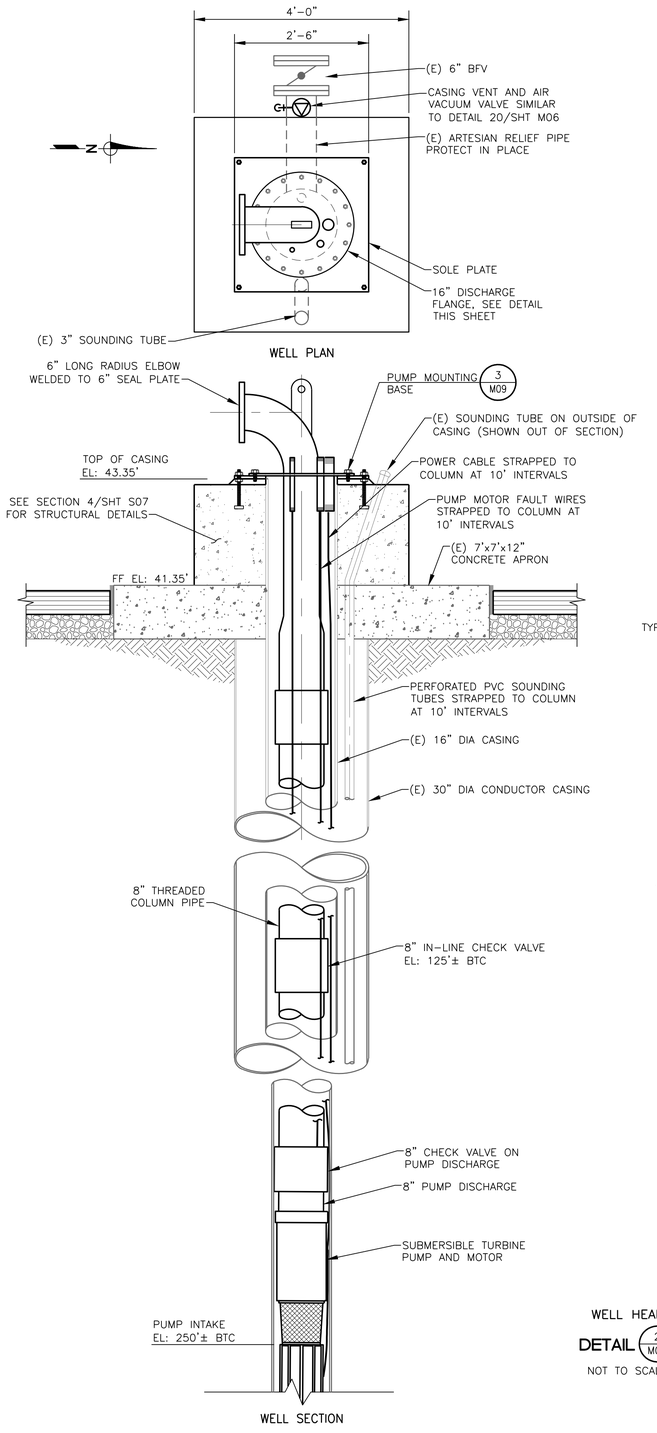

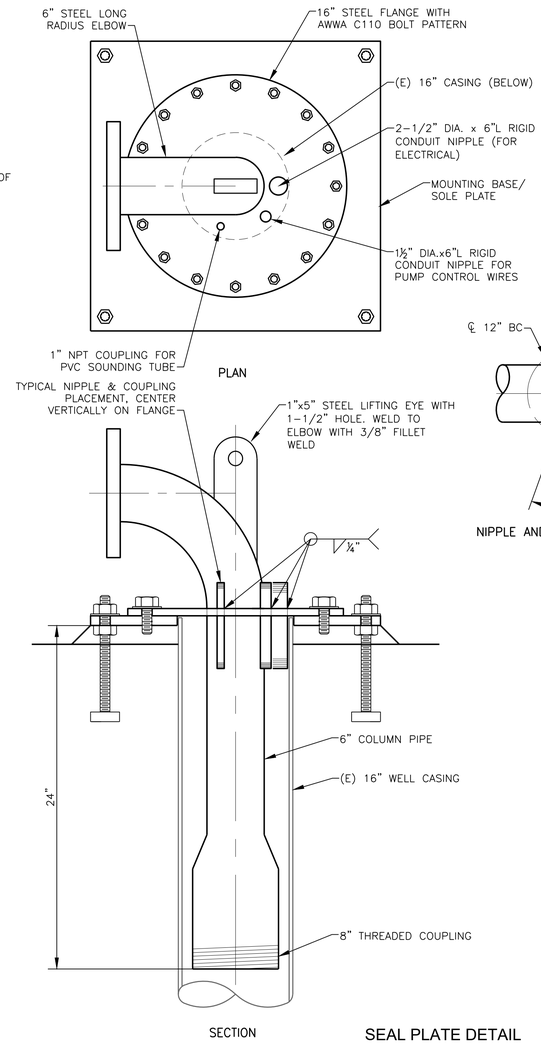

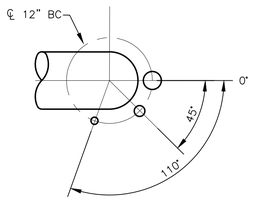

NIPPLE AND COUPLING LAYOUT

WELL HEAD
DETAIL 2/M09
NOT TO SCALE

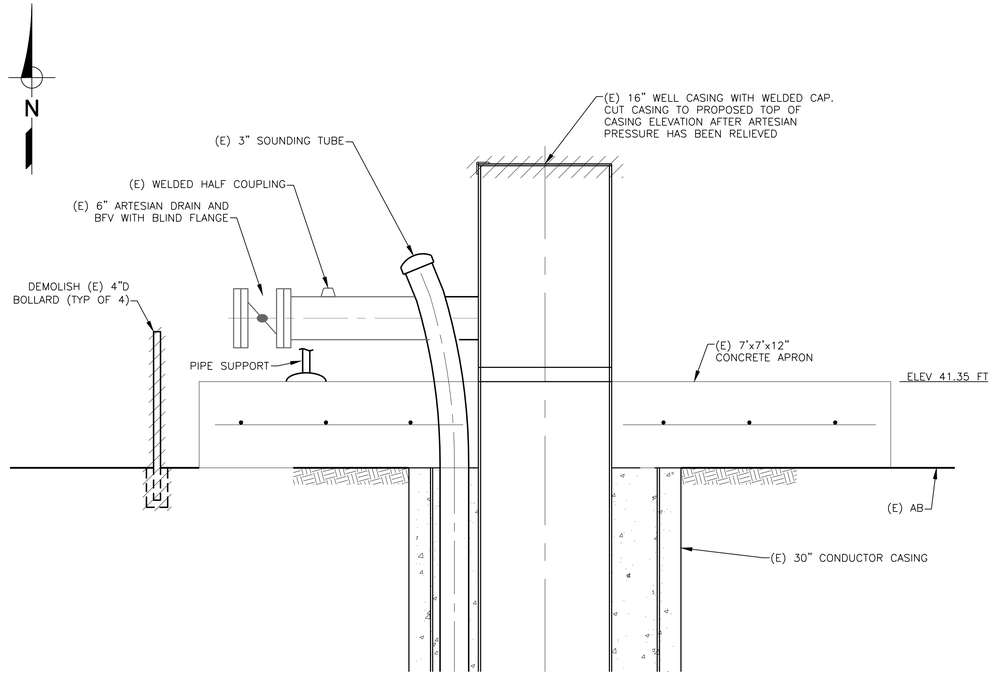

WELL HEAD EXISTING CONDITIONS AND DEMOLITION
DETAIL 1/M09
NOT TO SCALE

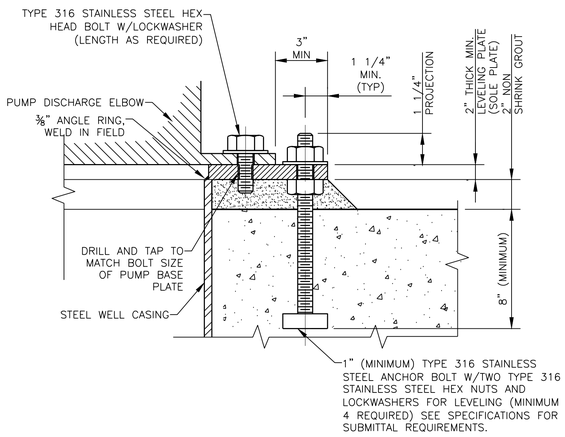

PUMP MOUNTING BASE
DETAIL 3/M09
NOT TO SCALE

WEST YOST
Water. Engineered.
6800 Koll Center Parkway
Suite 150
Pleasanton, CA 94566
(925) 426-2580
FAX (530) 756-5991

Designer Stamp:
REGISTERED PROFESSIONAL ENGINEER — JEFFREY WANG — No. C60930 Exp. 12-31-26 — CIVIL — STATE OF CALIFORNIA
2/6/2025

Record Drawings

Designer: _____ Date: _____
Public Works Inspector: _____ Date: _____
Utility/Facility Dept. Head: _____ Date: _____
Project Engineer: _____ Date: _____
Public Improvements Initially Accepted by the City Council on: _____ Res. No. _____

Drawn By: ____ Date: _____
Checked By: ____ Date: _____
Designed By: ____ Date: _____

Revisions

Num.	Description	Engr. Aprv.	Date
△			

CITY OF MILPITAS
ENGINEERING DIVISION

McCANDLESS WELL FACILITY
PROJECT NO. 7076

WELL HEAD DETAILS

RECOMMENDED FOR BIDDING BY: *Lyhak Eam* DATE: 2/7/2025
LYHAK EAM, P.E., Public Works Division Manager – Engineering

DWG NO. M09
PROJECT NO. 7076
Rec. Dwg No.
SCALE: AS SHOWN
SHEET 31 OF 70

N:\Clients\270 City of Milpitas\30-23-27 McCandless WFY\CAD\Production\270030-2327-M09.dwg 2/06/25 10:32:58 AM sbalmer

CERTIFICATE OF COMPLIANCE	NRCC-MCH-E
This document is used to demonstrate compliance for mechanical systems that are within the scope of the permit application and are demonstrating compliance using the prescriptive path outlined in 140.4, or 141.0(b)2 for alterations.	
Project Name: McCandless Well Equipping	**Report Page:** (Page 1 of 8)
Project Address:	**Date Prepared:** 2024-12-17T17:04:29-05:00

A. GENERAL INFORMATION

01	Project Location (city)	Milpitas	04	Total Conditioned Floor Area	953
02	Climate Zone	4	05	Total Unconditioned Floor Area	0
03	Occupancy Types Within Project:		06	# of Stories (Habitable Above Grade)	1

• Commercial Industrial

B. PROJECT SCOPE

This table Includes mechanical systems or components that are within the scope of the permit application and are demonstrating compliance using the prescriptive path outlined in 140.4, 170.2(b) or 141.0(b)2 and 180.2(b)2 for alterations.

01	02	03
Air System(s)	Wet System Components	Dry System Components
☐ Heating Air System	☐ Water Economizer	☐ Air Economizer
☒ Cooling Air System	☐ Pumps	☐ Electric Resistance Heat
Mechanical Controls	☐ System Piping	☒ Fan Systems
☐ Mechanical Controls (existing to remain, altered or new)	☐ Cooling Towers	☐ Ductwork (existing to remain, altered or new)
	☐ Chillers	☐ Ventilation
	☐ Boilers	☐ Zonal Systems/ Terminal Boxes

CERTIFICATE OF COMPLIANCE	NRCC-MCH-E
Project Name: McCandless Well Equipping	**Report Page:** (Page 2 of 8)
	Date Prepared: 2024-12-17T17:04:29-05:00

C. COMPLIANCE RESULTS

Table C will indicate if the project data input into the compliance document is compliant with mechanical requirements. This table is not editable by the user. If this table says "DOES NOT COMPLY" or "COMPLIES with Exceptional Conditions" refer to Table D, or the table indicated as not compliant for guidance.

01		02		03		04		05		06		07		08		09
System Summary 110.1, 110.2, 140.4, 170.2(c)	AND	Pumps 140.4(k), 170.2(c)4I	AND	Fans/ Economizers 140.4(c), 140.4(e), 170.2(c)	AND	System Controls 110.2, 120.2, 140.4(f), 170.2(c)	AND	Ventilation 120.1, 160.2	AND	Terminal Box Controls 140.4(d), 170.2(c)4B	AND	Distribution 120.3, 140.4(l), 160.2, 160.3	AND	Cooling Towers 110.2(e)2		Compliance Results
(See Table F)		(See Table G)		(See Table H)		(See Table I)		(See Table J)		(See Table K)		(See Table L)		(See Table M)		
Yes	AND		AND	Yes	AND	Yes	AND		AND		AND		AND			COMPLIES
Mandatory Measures Compliance (See Table Q for Details)												DOES NOT COMPLY					

D. EXCEPTIONAL CONDITIONS

This table is auto-filled with uneditable comments because of selections made or data entered in tables throughout the form.

E. ADDITIONAL REMARKS

This table includes remarks made by the permit applicant to the Authority Having Jurisdiction.

F. HVAC SYSTEM SUMMARY (DRY & WET SYSTEMS)

Space Conditioning System Information

01	02	03	04	05	06
System Name	Quantity	System Serving	System Status	Space Type	Utilizing Recovered Heat
Building Air Conditioner	3	Single zone	New/ Addition	All Other Occupancies	☐

CERTIFICATE OF COMPLIANCE	NRCC-MCH-E
Project Name: McCandless Well Equipping	**Report Page:** (Page 3 of 8)
	Date Prepared: 2024-12-17T17:04:29-05:00

F. HVAC SYSTEM SUMMARY (DRY & WET SYSTEMS)

Dry System Equipment Sizing (includes air conditioners, condensers, heat pumps, VRF, furnaces and unit heaters and DOAS systems)

01	02	03	04	05	06	07	08	09	10	11
Name or Item Tag	Equipment Category per Tables 110.2, 140.4(a)2 and 170.2(c)3aii	Equipment Type per Tables 110.2 and Title 20	Smallest Size Available[1] 140.4(a) and 170.2(c)1	Equipment Sizing per Mechanical Schedule (kBtu/h) 140.4(a&b), 170.2(c)1 & 170.2(c)2						
				Heating Output[2,3]			Cooling Output[2,3]		Load Calculations[3,4]	
				Per Design (kBtu/h)	Rated (kBtu/h)	Supp. Heating Output (kBtu/h)	Sensible Per Design (kBtu/h)	Rated (kBtu/h)	Total Heating Load (kBtu/h)	Total Sensible Cooling Load (kBtu/h)
Building Air Conditioner	Sm. Commercial AC	Air-cooled unitary AC/HP Pkg (3Ph)	Yes	0	0	0	18	18	0	54

[1] *FOOTNOTES: Equipment shall be the smallest size, within the available options of the desired equipment line, necessary to meet the design heating and cooling loads of the building per 140.4(a) and 170.2(c)1. Healthcare facilities are excepted.*
[2] *It is common practice to show rated output capacity on the equipment schedule. Sensible cooling output comes from specification sheet tables.*
[3] *If equipment is heating only, leave cooling output and load blank. If equipment is cooling only, leave heating output and load blank.*
[4] *Authority Having Jurisdiction may ask for load calculations used for compliance per 140.4(b) and 170.2(c).*

Dry System Equipment Efficiency (other than Package Terminal Air Conditioners (PTAC) and Package Terminal Heat Pumps (PTHP), DX-DOAS and Dual Fuel Heat Pumps)

01	02	03	04	05	06	07	08	09
Name or Item Tag	Size Category (Btu/h)	Heating Mode				Cooling Mode		
		Rating Condition (°F)	Efficiency Unit	Minimum Efficiency Required per Tables 110.2 / Title 20	Design Efficiency	Efficiency Unit	Minimum Efficiency Required per Tables 110.2 / Title 20	Design Efficiency
Building Air Conditioner	<65,000					SEER	14	90

G. PUMPS

This section does not apply to this project.

CERTIFICATE OF COMPLIANCE	NRCC-MCH-E
Project Name: McCandless Well Equipping	**Report Page:** (Page 4 of 8)
	Date Prepared: 2024-12-17T17:04:29-05:00

H. FAN SYSTEMS & AIR ECONOMIZERS

This table is used to demonstrate compliance with prescriptive requirements found in 140.4(c), 140.4(e), 140.4(m), 170.2(c)3, and 170.2(c)4A for fan systems. Fan systems serving only process loads are exempt from these requirements and do not need to be included in Table H.

System Name	Exhaust Fan	Quantity	1	Fan System Status	New	System Zoning	all other systems	Serving Dwelling Units	Not Serving Dwelling Units	Fan System Airflow (cfm)	1,200	Site Elevation	40	Economizer	Differential Enthalpy
01	02	03	04			05		06	07	08	09			10	11
Fan Name or Item Tag	Fan Type	Qty	Component			Airflow through Component (%)		Water Gauge (w.g)	Allowance		Design				
									Component Allowance (watt/cfm)	Fan Allowance (watt/cfm [3]	Design Electrical Input Power Method			Motor Nameplate Horsepower	Fan Electrical Input Power (kW)
Exhaust Fan	Exhaust	1	None used							0	Default per Table 140.4-D/141.0-D			<1	0.96
Supply Fan Base Allowance (watt/cfm)			Exhaust/Return/Relief/Transfer Fan Base Allowance(watt/cfm)						Fan System Allowance (kW)[3]					Fan System Electrical Input Power (kW)	0.96

[1] *FOOTNOTES: Fans serving spaces with design background noise goals below NC35*
[2] *Low-turndown single-zone VAV fan system must be capable of and configured to reduce airflow to 50 percent of design airflow and use no more than 30 percent of the design wattage at that airflow. No more than 10 percent of the design load served by the equipment shall have fixed loads.*
[3] *Fan system allowance includes fan system base allowance.*
[4] *Filter pressure loss can only be counted once per fan system.*
[5] *Complex Fan System means a fan system that combines a single cabinet fan system with other supply fans, exhaust fans, or both.*
[6] *Computer room economizers must meet requirements of 140.9(a) and will be documented on the NRCC-PRC-E document..*

H. EXHAUST AIR HEAT RECOVERY 140.4(q), 170.2(c)4O

01	02	03	04	05	06	07	08	09	10	11

CERTIFICATE OF COMPLIANCE	NRCC-MCH-E
Project Name: McCandless Well Equipping	**Report Page:** (Page 5 of 8)
	Date Prepared: 2024-12-17T17:04:29-05:00

H. EXHAUST AIR HEAT RECOVERY 140.4(q), 170.2(c)4O

Fan System Name	Qty	Hours of Operation per Year	Design Supply Airflow Rate	Outdoor Airflow	% Outdoor Air at Full Design Airflow	Exemptions to Exhaust Air Heat Recovery Requirement per 140.4(q) & 170.2(c)4O	Exhaust Air Heat Recovery 140.4(q) & 170.2(c)4O	Type Of Heat Recovery Rating	Required Recovery Ratio	Energy Recovery Bypass
Exhaust Fan	1	< 8,000	1,200	0		No Exemptions Apply	Not Required			

Fan Energy Index (FEI)

01	02	03
Name or Item Tag	FEI Exception	FEI
Exhaust Fan	None Applies	1

I. SYSTEM CONTROLS

This section does not apply to this project.

J. VENTILATION AND INDOOR AIR QUALITY

☒ Check the box if the project is showing ventilation calculations on the plans, or attaching the calculations instead of completing this table.

K. TERMINAL BOX CONTROLS

This section does not apply to this project.

L. DISTRIBUTION (DUCTWORK and PIPING)

This section does not apply to this project.

CERTIFICATE OF COMPLIANCE	NRCC-MCH-E
Project Name: McCandless Well Equipping	**Report Page:** (Page 6 of 8)
	Date Prepared: 2024-12-17T17:04:29-05:00

M. COOLING TOWERS

This section does not apply to this project.

N. DECLARATION OF REQUIRED CERTIFICATES OF INSTALLATION

Selections have been made based on information provided in previous tables of this document. If any selection needs to be changed, please explain why in Table E Additional Remarks. These documents must be provided to the building inspector during construction and can be found online at https://www.energy.ca.gov/programs-and-topics/programs/building-energy-efficiency-standards/2022-building-energy-efficiency-4

Form/Title
NRCI-MCH-01-E - Must be submitted for all buildings

O. DECLARATION OF REQUIRED CERTIFICATES OF ACCEPTANCE

Selections have been made based on information provided in previous tables of this document. If any selection needs to be changed, please explain why in Table E Additional Remarks. These documents must be provided to the building inspector during construction and can be found online at https://www.energy.ca.gov/programs-and-topics/programs/building-energy-efficiency-standards/2022-building-energy-efficiency-4

Form/Title	Systems/Spaces To Be Field Verified
NRCA-MCH-03-A - Constant Volume Single Zone HVAC NOTE: This form does not automatically move to "Yes". If Constant Volume Single Zone HVAC Systems are included in the scope, permit applicant should move this form to "Yes".	Building HVAC
NRCA-MCH-05-A - Air Economizer Controls	
NRCA-MCH-13-A Automatic FDD for Air Handling Units and Zone Terminal Units Acceptance	Building Air Conditioner
NRCA-MCH-18-A Energy Management Control Systems	Building HVAC

P. DECLARATION OF REQUIRED CERTIFICATES OF VERIFICATION

There are no NRCV forms required for this project.

CERTIFICATE OF COMPLIANCE	NRCC-MCH-E
Project Name: McCandless Well Equipping	**Report Page:** (Page 7 of 8)
	Date Prepared: 2024-12-17T17:04:29-05:00

Q. MANDATORY MEASURES DOCUMENTATION LOCATION

This table is used to indicate where mandatory measures are documented in the plan set or construction documentation.

01		02
Compliance with Mandatory Measures documented through MCH Mandatory Measures Note Block	No	Plan sheet or construction document location
03		04
Mandatory Measure		**Plan sheet or construction document location**
Heating Equipment Efficiency per 110.1		
Cooling Equipment Efficiency per 110.1		
Furnace Standby Loss Control per 110.2(d)		
Heat Pump with Supplemental electric Resistance Heater Controls per 110.2(b)		NA

CERTIFICATE OF COMPLIANCE	NRCC-MCH-E
Project Name: McCandless Well Equipping	**Report Page:** (Page 8 of 8)
Project Address:	**Date Prepared:** 2024-12-17T17:04:29-05:00

DOCUMENTATION AUTHOR'S DECLARATION STATEMENT

I certify that this Certificate of Compliance documentation is accurate and complete.

Documentation Author Name:	Jeffrey Wanlass	Documentation Author Signature:	
Company:	West Yost Associates	Signature Date:	02/02/2025
Address:	2020 Research Park Drive, Suite 100	CEA/ HERS Certification Identification (if applicable):	
City/State/Zip:	Davis CA 95618	Phone:	530-756-5905

RESPONSIBLE PERSON'S DECLARATION STATEMENT

I certify the following under penalty of perjury, under the laws of the State of California:

1. The information provided on this Certificate of Compliance is true and correct.
2. I am eligible under Division 3 of the Business and Professions Code to accept responsibility for the building design or system design identified on this Certificate of Compliance (responsible designer)
3. The energy features and performance specifications, materials, components, and manufactured devices for the building design or system design identified on this Certificate of Compliance conform to the requirements of Title 24, Part 1 and Part 6 of the California Code of Regulations.
4. The building design features or system design features identified on this Certificate of Compliance are consistent with the information provided on other applicable compliance documents, worksheets, calculations, plans and specifications submitted to the enforcement agency for approval with this building permit application.
5. I will ensure that a completed signed copy of this Certificate of Compliance shall be made available with the building permit(s) issued for the building, and made available to the enforcement agency for all applicable inspections. I understand that a completed signed copy of this Certificate of Compliance is required to be included with the documentation the builder provides to the building owner at occupancy.

Responsible Designer Name:	Jeffrey Wanlass	Responsible Designer Signature:	
Company:	West Yost Associates	Date Signed:	02/05/2025
Address:	2020 Research Park Drive, Suite 100	License:	C 60930
City/State/Zip:	Davis CA 95168	Phone:	530-756-5905

WEST YOST
Water. Engineered.
6800 Koll Center Parkway
Suite 150
Pleasanton, CA 94566
(925) 426-2580
FAX (530) 756-5991

Designer Stamp:
REGISTERED PROFESSIONAL ENGINEER
No. C60930
Exp. 12-31-26
CIVIL
STATE OF CALIFORNIA
2/6/2025

Record Drawings

Designer: _____ Date: _____
Public Works Inspector: _____ Date: _____
Utility/Facility Dept. Head: _____ Date: _____
Project Engineer: _____ Date: _____
Public Improvements Initially Accepted by the City Council on: _____ Res. No. _____

Drawn By: ____ Date: _____
Checked By: ____ Date: _____
Designed By: ____ Date: _____

Revisions

Num.	Description	Engr. Aprv.	Date
1			

CITY OF MILPITAS
ENGINEERING DIVISION

McCANDLESS WELL FACILITY
PROJECT NO. 7076

ENERGY COMPLIANCE FORMS - MECHANICAL SYSTEMS

RECOMMENDED FOR BIDDING BY: Lyhak Eam DATE: 2/7/2025
LYHAK EAM, P.E., Public Works Division Manager – Engineering

DWG NO. M10
PROJECT NO. 7076
Rec. Dwg No.
SCALE: AS SHOWN
SHEET 32 OF 70

N:\Clients\2700 City of Milpitas\23-22 McCandless WEL\CAD\Production\27030-2322-A10.dwg 2-06-25 10:33:41 AM sbarber

GENERAL

1. BASIS OF DESIGN: 2022 CALIFORNIA BUILDING CODE.
2. THESE DRAWINGS SHALL BE USED IN CONJUCTION WITH THE SEPARATELY BOUND PROJECT SPECIFICATIONS.
3. ALL MATERIALS, WORKMANSHIP, TESTING AND INSPECTION SHALL CONFORM TO THE CALIFORNIA BUILDING CODE, 2022 EDITION, AND LOCAL BUILDING CODES.
4. THE CONTRACTOR SHALL VERIFY ALL DIMENSIONS AND EXISTING CONDITIONS ON THE JOBSITE WITH A COMPLETE SET OF THE LATEST DRAWINGS. OMISSIONS OR DISCREPANCIES BETWEEN THE VARIOUS ELEMENTS OF THE CONTRACT DOCUMENTS SHALL BE BROUGHT TO THE ATTENTION OF THE ENGINEER BEFORE PROCEEDING WITH WORK.
5. DETAILS SHOWN ARE TYPICAL, AND APPLY TO SIMILAR CONDITIONS, UNLESS NOTED OTHERWISE.
6. THE CONTRACTOR SHALL BE RESPONSIBLE FOR JOBSITE SAFETY, INCLUDING SAFETY OF THE BUILDING AND ALL EXISTING UTILITIES. THE CONTRACTOR SHALL PROVIDE ADEQUATE SHORING, BRACING, AND GUYS IN ACCORDANCE WITH ALL NATIONAL, STATE AND LOCAL ORDINANCES.
7. DRAWINGS SHALL NOT BE SCALED OR MEASURED FOR DIMENSIONS.
8. SPECIAL INSPECTION SHALL BE PROVIDED AS REQUIRED BY THE STATEMENT OF SPECIAL INSPECTIONS ON SHEET S02.

FOUNDATION

1. FOUNDATION DESIGN IS BASED ON GEOTECHNICAL REPORT PREPARED BY RGH CONSULTANTS DATED JUNE 4, 2019, PROJECT NO. 5383.10.PW.1 AND UPDATE LETTER DATED JANUARY 17, 2020.
2. FOOTING DESIGN CAPACITIES:

DEAD LOAD BEARING PRESSURE:	1,600 PSF
DEAD + LIVE LOAD BEARING PRESSURE:	2,400 PSF
DEAD + WIND / SEISMIC BEARING PRESSURE:	3,200 PSF

3. SIDES OF FOOTINGS SHOWN STRAIGHT ARE FORMED. IF SITE CONDITION ALLOWS AND GEOTECHNICAL ENGINEER CONCURS, SIDES OF FOOTINGS MAY BE FORMED OR NOT FORMED AT CONTRACTOR'S OPTION. FOOTINGS CAST DIRECTLY AGAINST EARTH REQUIRE THE FOLLOWING PRECAUTIONS; A) SLOPE SIDES OF EXCAVATIONS AS APPROVED BY THE GEOTECHNICAL ENGINEER, B) CLEAN UP OF SLOUGHING BEFORE, DURING AND AFTER PLACING CONCRETE, C) ADEQUATE COVER MUST BE PROVIDED FOR ALL REBAR. ADD 1" TO ALL SIDES OF FOOTING DIMENSIONS WHICH ARE CAST AGAINST EARTH.

CONCRETE

1. ALL CONCRETE SHALL BE MIXED AND PLACED IN ACCORDANCE WITH ACI 318-19. USE MIXES WITH MAXIMUM AGGREGATE SIZE APPROPRIATE FOR FORM REBAR CLEARANCES TO BE ENCOUNTERED (SEE A.C.I.)
2. THE PROPOSED MATERIALS AND MIX DESIGN SHALL BE FULLY DOCUMENTED BY THE CONTRACTOR AND REVIEWED BY THE ENGINEER. IT IS THE CONTRACTOR'S RESPONSIBILITY TO OBTAIN THE REQUIRED DESIGN STRENGTH. SUBMITTAL DATA FROM 30 PREVIOUS COMPRESSION TESTS ON EACH PROPOSED MIX WILL BE REQUIRED FOR REVIEW BEFORE MIX CAN BE APPROVED.
3. ALL CONCRETE SHALL HAVE THE FOLLOWING MINIMUM 28-DAY STRENGTHS, U.N.O.

STRUCTURE FOOTINGS, SLABS, AND WALLS, U.N.O.	4,000 PSI
FILTER VESSEL AND PIPE SUPPORT PADS	4,000 PSI
MISCELLANEOUS SITE CONCRETE	3,000 PSI

4. SCHEDULING OF WORK MAY REQUIRE DESIGN STRENGTH TO BE ACHIEVED IN LESS THAN 28 DAYS. CONTRACTOR SHALL COORDINATE MIX DESIGN AND CONCRETE CYLINDER BREAKS WITH THE SPECIAL INSPECTOR.
5. CONSTRUCTION JOINTS SHALL BE INTENTIONALLY ROUGHENED BY SAND BLASTING OR MECHANICAL MEANS AND CLEANED BEFORE NEW POUR. LOCATIONS SHALL BE AS SHOWN OR APPROVED IN WRITING BY THE STRUCTURAL ENGINEER.
6. BACKFILLING OF BELOW-GRADE WALLS SHALL NOT BEGIN UNTIL THE CONCRETE HAS REACHED ITS REQUIRED DESIGN STRENGTH.

CONCRETE UNIT MASONRY

1. ALL CONCRETE UNIT MASONRY SHALL BE LIGHTWEIGHT AND SHALL BE GROUTED SOLID.
2. MASONRY UNIT DESIGN STRENGTH f'm = 2,000 PSI.
3. THE PROPOSED MATERIALS AND GROUT AND MORTAR MIX DESIGNS SHALL BE FULLY DOCUMENTED BY THE CONTRACTOR AND REVIEWED BY THE CITY'S TESTING LABORATORY. IT IS THE CONTRACTOR'S RESPONSIBILITY TO OBTAIN THE REQUIRED STRENGTH.
4. VERIFICATION OF f'm SHALL BE BY MEANS OF THE UNIT STRENGTH METHOD AS OUTLINED IN CBC SECTION 2105.2.2.1.

REINFORCING STEEL

1. REINFORCING STEEL SHALL BE ASTM A615, GRADE 60 DEFORMED BARS, U.N.O. REINFORCING STEEL TO BE WELDED SHALL BE ASTM A706.
2. ALL REINFORCING STEEL AND EMBEDMENTS TO BE HELD SECURELY IN PLACE PRIOR TO PLACING CONCRETE. PROVIDE SUFFICIENT SUPPORTS TO ALLOW WALKING ON REINFORCEMENT.
3. WELDING OF REINFORCING IS PROHIBITED UNLESS EXPLICITLY SHOWN ON THE DRAWINGS OR APPROVED IN WRITING BY THE STRUCTURAL ENGINEER.
4. PROVIDE CONTINUOUS REINFORCEMENT WHEREVER POSSIBLE, PLACE ONLY AS SHOWN OR APPROVED, STAGGER SPLICES WHERE POSSIBLE.

STRUCTURAL STEEL

1. MATERIAL SPECIFICATIONS:
   - WIDE FLANGE BEAMS: ASTM A992, Fy = 50 KSI
   - SQUARE AND RECTANGULAR HSS SECTIONS: ASTM A500, GRADE B, Fy = 46 KSI
   - ROUND PIPE: ASTM A53, GRADE B, Fy = 35 KSI
   - ALL OTHER ROLLED SHAPES AND PLATES: ASTM A36, Fy = 36 KSI
   - ALL BASE PLATES, ANGLES AND MISCELLANEOUS STEEL: ASTM A36, Fy = 36 KSI U.N.O.
   - MACHINE BOLTS: ASTM A307, U.N.O.
   - HIGH STRENGTH BOLTS: ASTM A325, U.N.O.
   - HEADED ANCHOR STUDS: ASTM A108
2. ALL STRUCTURAL STEEL SHALL BE DETAILED, FABRICATED AND ERECTED IN ACCORDANCE WITH AISC SPECIFICATIONS
3. ALL WELDING SHALL CONFORM TO AWS D1.1 AND SHALL BE PERFORMED BY CERTIFIED WELDERS.
4. ALL GROOVE AND BUTT WELDS SHALL BE COMPLETE PENETRATION U.N.O.
5. BOLT HOLES SHALL BE NO MORE THAN 1/16" OVERSIZE, U.N.O.
6. CONTRACTOR SHALL SUBMIT DETAILED SHOP DRAWINGS PER SPECIFICATIONS TO THE ENGINEER FOR REVIEW PRIOR TO FABRICATION.

PREFABRICATED METAL ROOF TRUSSES

1. THE CONTRACTOR SHALL SUBMIT SHOP DRAWINGS FOR THE METAL ROOF TRUSSES TO BE INSTALLED AS SHOWN ON THE CONTRACT DRAWINGS, INCLUDING LAYOUT, SIZE OF MEMBERS, AND CONNECTION DETAILS. IN ADDITION TO THE ABOVE DRAWINGS, CALCULATIONS SHOWING ALL STRESSES AND DEFLECTIONS CAUSED BY DEAD, LIVE, WIND AND/OR SEISMIC LOADS SHALL BE SUBMITTED TO THE ENGINEER FOR REVIEW. DRAWINGS AND CALCULATIONS SHALL BE SIGNED BY A REGISTERED CIVIL ENGINEER IN THE STATE OF CALIFORNIA.
2. METAL TRUSS DESIGN AND CONSTRUCTION SHALL BE IN ACCORDANCE WITH AN ICC-ES REPORT AND APPLICABLE REQUIREMENTS OF THE 2022 CBC.
3. ROOF LOADS SHALL BE AS FOLLOWS:

TOP CHORD DEAD LOAD	8 PSF (NOT INCLUDING TRUSS SELF-WEIGHT)
TOP CHORD LIVE LOAD	20 PSF (REDUCIBLE)
BOTTOM CHORD DEAD LOAD	5 PSF (NOT INCLUDING TRUSS SELF-WEIGHT)
BOTTOM CHORD LIVE LOAD	10 PSF (NON-CONCURRENT WITH TOP CHORD LIVE LOAD)
WIND LOAD	23 PSF (VERTICAL), 8 PSF (HORIZONTAL); APPLY LOADS CONCURRENTLY AND IN WORST CASE DIRECTION
SEISMIC LOAD	AS NOTED ON THE DRAWINGS

METAL DECKING

1. METAL DECKING SHALL BE 20 GA., $1\frac{5}{16}$" DEEP x 36" WIDE VERCOR AS MANUFACTURED BY VERCO MANUFACTURING CO., PHOENIX, ARIZONA (ICC-ES REPORT NO. ESR-1735P) OR APPROVED EQUAL. DECK PANELS ARE TO BE THREE-SPAN CONTINUOUS WHEREVER POSSIBLE, ONE-SPAN ONLY WHERE UNAVOIDABLE. DECKING SHALL BE FORMED FROM STEEL SHEETS HAVING A MINIMUM YIELD STRENGTH OF 80,000 PSI AND CONFORMING TO ASTM A653, SS GRADE 80. THE STEEL SHALL HAVE A METAL PROTECTIVE COATING OF ZINC CONFORMING TO LIGHT COMMERCIAL DECKING.
2. SCREW METAL DECK TO SUPPORTS AT ROOF AS FOLLOWS (U.N.O.):
   A. WHERE SUPPORTS ARE PERPENDICULAR TO FLUTES:
      SCREWS AT EVERY OTHER FLUTE AT EACH INTERMEDIATE SUPPORT AND EACH SHEET END (MIN. OF 5 SCREWS PER 3'-0" SHEET). SCREWS SHALL BE #12-14x$\frac{3}{4}$" LONG (MIN.) TEKS 3.
   B. WHERE SUPPORTS ARE PARALLEL TO FLUTES:
      SCREWS AT 12" O.C. SCREWS SHALL BE #12-14x$\frac{3}{4}$" LONG (MIN.) TEKS 3.
   C. DECK PANELS SHALL BE SIDELAPPED USING THE "NORMAL" ORIENTATION. SIDELAPS SHALL BE SCREWED BETWEEN SUPPORTS AT 12" O.C. SCREWS SHALL BE #12-14x$\frac{3}{4}$" TEKS 1.
3. SCREWS SHALL BE TEK SCREWS AS MANUFACTURED BY ITW BUILDEX, ITASCA, ILLINOIS OR APPROVED EQUAL.
4. METAL STUD FRAMING MEMBERS, BLOCKING AND BRACING SHALL BE SUPPLIED BY A MANUFACTURER WHO IS A MEMBER OF THE STEEL STUD MANUFACTURER'S ASSOCIATION (SSMA). STEEL SHALL BE ASTM A653, GRADE 33 FOR 18 GA. AND THINNER MATERIAL AND GRADE 50 FOR 16 GA. AND THICKER MATERIAL. THE STEEL SHALL HAVE A MINIMUM ZINC COATING (HOT-DIP GALVANIZED) OF G60.

DEFERRED SUBMITTALS/SHOP DRAWINGS

THE FOLLOWING ITEMS SHALL BE SUBMITTED TO THE ENGINEER FOR REVIEW. DEFERRED SUBMITTAL ITEMS ARE NOT FOR CONSTRUCTION UNTIL THEY HAVE BEEN REVIEWED AND APPROVED.

1. CONCRETE MIX DESIGNS.
2. UNIT MASONRY SHOP DRAWINGS, GROUT MIX DESIGNS AND CERTIFICATIONS OF COMPLIANCE.
3. BAR REINFORCING STEEL SHOP DRAWINGS.
4. STRUCTURAL STEEL & MISCELLANEOUS METAL SHOP DRAWINGS.
5. WELDING PROCEDURE SPECIFICATIONS, WELDING ELECTRODE DATA, & WELDER QUALIFICATIONS.
6. PREFABRICATED METAL ROOF TRUSS SHOP DRAWINGS.
7. METAL DECKING SHOP DRAWINGS.
8. PREFINISHED STANDING SEAM METAL ROOF AND SOFFIT LINER PANELS.
9. ANCHORAGE OF PUMPS, ELECTRICAL/CONTROL EQUIPMENT, TANKS, AND AIR COMPRESSOR.
10. BACKWASH TANK SHOP DRAWINGS & CALCULATIONS INCLUDING ANCHORAGE DESIGN.
11. FILTER VESSEL SHOP DRAWINGS & CALCULATIONS INCLUDING ANCHORAGE DESIGN.
12. FRP GRATING SHOP DRAWINGS.

STRUCTURAL DESIGN PARAMETERS

DESIGN DEAD LOADS:	
A. ROOF LOAD	18 PSF
DESIGN LIVE LOADS:	
A. ROOF LOAD	20 PSF
DESIGN WIND LOADS – MAIN WIND FORCE RESISTING SYSTEM (MWFRS):	
BASIC WIND SPEED	100 MPH
EXPOSURE CATEGORY	C
DESIGN EARTHQUAKE LOADS:	
RISK CATEGORY III	
SITE CLASS	E
SEISMIC IMPORTANCE FACTOR, I	1.25
MAPPED SPECTRAL RESPONSE ACCELERATIONS:	
S_S	1.833g
S_1	0.698g
SPECTRAL RESPONSE COEFFICIENTS:	
S_{DS}	1.077g
S_{D1}	2.088g
SEISMIC DESIGN CATEGORY, SDC	D
BASIC SEISMIC FORCE RESISTING SYSTEM: SPECIAL REINFORCED MASONRY SHEARWALLS	
RESPONSE MODIFICATION FACTOR, R	5.00
SEISMIC RESPONSE COEFFICIENT/DESIGN BASE SHEAR	0.269W (STRENGTH LEVEL)

ABBREVIATIONS

&	AND	G.S.M.	GALVANIZED SHEET METAL
@	AT	GMU	GLASS MASONRY UNIT
ø	DIAMETER	HDR.	HEADER
#	NUMBER	HGRS.	HANGERS
A.B.	ANCHOR BOLT	H.S.B.	HIGH STRENGTH BOLTS
A.F.F.	ABOVE FINISHED FLOOR	H.M.	HOLLOW METAL
ARCH.	ARCHITECT	HORIZ.	HORIZONTAL
BM.	BEAM	HT.	HEIGHT
BRG.	BEARING	INT.	INTERIOR
BLKG.	BLOCKING	JST.	JOIST
BOTT.	BOTTOM	LDGR.	LEDGER
BNDY.	BOUNDARY	LL	LIVE LOAD
CAM	CAMBER UP	LLH	LONG LEG HORIZONTAL
C.J.	CEILING JOIST	LLV	LONG LEG VERTICAL
CLG.	CEILING	MAX.	MAXIMUM
℄	CENTERLINE	M.B.	MACHINE BOLTS
CLR.	CLEAR	MECH.	MECHANICAL
COL.	COLUMN	MIN.	MINIMUM
CJP	COMPLETE JOINT PENETRATION	(N)	NEW
		N/A	NOT APPLICABLE
CONN.	CONNECTION	NTS	NOT TO SCALE
CONC.	CONCRETE	O.C.	ON CENTER
CONST.	CONSTRUCTION	O.H.	OPPOSITE HAND
CMU	CONCRETE MASONRY UNIT	PJP	PARTIAL JOINT PENETRATION
CONT.	CONTINUOUS	PL	PLATE
DBL.	DOUBLE	REINF.	REINFORCEMENT
DP.	DEEP	R.R.	ROOF RAFTER
EA.	EACH	S.A.D.	SEE ARCHITECTURAL DRAWINGS
E.N.	EDGE NAILING	SHT.	SHEET
ELEC.	ELECTRICAL	S.M.S.	SHEET METAL SCREW
EL.	ELEVATION	SHTG.	SHEATHING
ELEV.	ELEVATION	SIM.	SIMILAR
EMBED.	EMBEDMENT	S.O.G.	SLAB ON GRADE
EQ.	EQUAL	SPECS.	SPECIFICATIONS
(E)	EXISTING	SQ.	SQUARE
EXT.	EXTERIOR	STD.	STANDARD
F.F.	FINISHED FLOOR	THK.	THICK
FLR.	FLOOR	THD.	THREADED
FDN.	FOUNDATION	T.O.C.	TOP OF CONCRETE
FRP	FIBERGLASS REINFORCED PLASTIC	T.O.S.	TOP OF STEEL
		T&B	TOP & BOTTOM
FTG.	FOOTING	TYP.	TYPICAL
F.H.	FULL HEIGHT	U.N.O.	UNLESS NOTED OTHERWISE
F.J.	FLOOR JOIST	VERT.	VERTICAL
GA.	GAGE	W/	WITH
GALV.	GALVANIZED		

PASE
408.957.9220 www.pase.com

Designer Stamp:
REGISTERED PROFESSIONAL ENGINEER TIMOTHY E. ELLIOTT C 63260 S 4946 STATE OF CALIFORNIA STRUCTURAL
02/06/25

Record Drawings

Designer: _____ Date: _____
Public Works Inspector: _____ Date: _____
Utility/Facility Dept. Head: _____ Date: _____
Project Engineer: _____ Date: _____
Public Improvements Initially Accepted by the City Council on: _____ Res. No. _____

Drawn By: REM Date: 02/06/25
Checked By: TEE Date: 02/06/25
Designed By: TEE Date: 02/06/25

Revisions

Num.	Description	Engr. Aprv.	Date
1			

CITY OF MILPITAS
ENGINEERING DIVISION

McCANDLESS WELL FACILITY
PROJECT NO. 7076

GENERAL STRUCTURAL NOTES & SPECIFICATIONS

RECOMMENDED FOR BIDDING BY: Lyhak Eam DATE: 2/7/2025
LYHAK EAM, P.E., Public Works Division Manager – Engineering

DWG NO. S01
PROJECT NO. 7076
Rec. Dwg No.
SCALE: AS SHOWN
SHEET 33 OF 70

Y:\Projects\23-DWGS\23-336 McCandless Well Facility\23-336S01.dwg 2/5/2025 3:00 PM telliott

STATEMENT OF SPECIAL INSPECTIONS

SPECIAL INSPECTION
– INSPECTION OF THE MATERIALS, INSTALLATION, FABRICATION, ERECTION OR PLACEMENT OF COMPONENTS AND CONNECTIONS REQUIRING SPECIAL EXPERTISE TO ENSURE COMPLIANCE WITH THE APPROVED CONSTRUCTION DOCUMENTS AND THE 2022 CALIFORNIA BUILDING CODE (CBC). THIS IS IN ADDITION TO THOSE REQUIRED BY SECTION 110, CHAPTER 1 OF THE 2022 CBC.

SPECIAL INSPECTOR
– THE SPECIAL INSPECTOR SHALL BE A QUALIFIED PERSON WHO SHALL DEMONSTRATE COMPETENCE, TO THE SATISFACTION OF THE BUILDING OFFICIAL, FOR INSPECTION OF THE PARTICULAR TYPE OF CONSTRUCTION OR OPERATION REQUIRING SPECIAL INSPECTION.

DUTIES AND RESPONSIBILITIES OF THE SPECIAL INSPECTOR
– THE SPECIAL INSPECTOR SHALL INSPECT THE WORK ASSIGNED FOR CONFORMANCE WITH THE APPROVED DESIGN DRAWINGS AND SPECIFICATIONS.

– SPECIAL INSPECTORS SHALL KEEP RECORDS OF ALL INSPECTIONS. THE SPECIAL INSPECTOR SHALL FURNISH INSPECTION REPORTS TO THE BUILDING OFFICIAL, THE ENGINEER OR ARCHITECT OF RECORD, AND OTHER DESIGNATED PERSONS. REPORTS SHALL INDICATE THAT WORK INSPECTED WAS DONE IN CONFORMANCE TO APPROVED CONSTRUCTION DOCUMENTS. DISCREPANCIES SHALL BE BROUGHT TO THE IMMEDIATE ATTENTION OF THE CONTRACTOR FOR CORRECTION, THEN IF UNCORRECTED, TO THE ATTENTION OF THE BUILDING OFFICIAL AND ENGINEER OR ARCHITECT OF RECORD.

– THE SPECIAL INSPECTOR SHALL SUBMIT A FINAL SIGNED REPORT STATING WHETHER THE WORK REQUIRING SPECIAL INSPECTION WAS, TO THE BEST OF THE INSPECTOR'S KNOWLEDGE, IN CONFORMANCE WITH THE APPROVED PLANS AND SPECIFICATIONS AND THE APPLICABLE WORKMANSHIP PROVISIONS OF THE CODE.

CONTRACTOR STATEMENT OF RESPONSIBILITY
– PRIOR TO COMMENCEMENT OF WORK, THE CONTRACTOR SHALL SUBMIT A WRITTEN STATEMENT OF RESPONSIBILITY TO THE BUILDING OFFICIAL AND THE OWNER IN CONFORMANCE WITH SECTION 1704.4 OF THE 2022 CBC.

REQUIRED SPECIAL INSPECTIONS
– ITEMS REQUIRING SPECIAL INSPECTION SHALL BE AS FOLLOWS:

REQUIRED VERIFICATION OF STRUCTURAL MASONRY

MINIMUM VERIFICATION	REQUIRED FOR QUALITY ASSURANCE[1]			REFERENCE FOR CRITERIA
	LEVEL 1	LEVEL 2	LEVEL 3	TMS 602[2]
Prior to construction, verification of compliance of submittals.	R	R	R	Art. 1.5
Prior to construction, verification of f'_m and f'_{AAC}, except where specifically exempted by the Code.	NR	R	R	Art. 1.4B
During construction, verification of Slump flow and Visual Stability Index (VSI) when self-consolidating grout is delivered to the project site.	NR	R	R	Art. 1.5 & 1.6.3
During construction, verification of f'_m and f'_{AAC} for every 5,000 sq. ft. (465 sq. m).	NR	NR	R	Art. 1.4B
During construction, verification of proportions of materials as delivered to the project site for premixed or preblended mortar, prestressing grout, and grout other than self-consolidating grout.	NR	NR	R	Art. 1.4B

1. R=Required, NR=Not Required.
2. The specific standards referenced are those listed in CBC Chapter 35.

REQUIRED SPECIAL INSPECTIONS AND TESTS OF STRUCTURAL MASONRY

INSPECTION TASK	FREQUENCY[1]			REFERENCE FOR CRITERIA	
	LEVEL 1	LEVEL 2	LEVEL 3	TMS 402[2]	TMS 602[2]
1. As masonry construction begins, verify that the following are in compliance:					
a. Proportions of site-prepared mortar	NR	P	P	–	Art. 2.1, 2.6A, & 2.6C
b. Grade and size of prestressing tendons and anchorages	NR	P	P	–	Art. 2.4B & 2.4H
c. Grade, type and size of reinforcement, connectors, anchor bolts, and prestressing tendons and anchorages	NR	P	P	–	Art. 3.4 & 3.6A
d. Prestressing technique	NR	P	P	–	Art. 3.6B
e. Properties of thin-bed mortar for AAC masonry	NR	C*P*[4]	C	–	Art. 2.1C.1
f. Sample panel construction	NR	P	C	–	Art. 1.6D
2. Prior to grouting, verify that the following are in compliance:					
a. Grout space	NR	P	C	–	Art. 3.2D & 3.2F
b. Placement of prestressing tendons and anchorages	NR	P	P	Sec. 10.8 & 10.9	Art. 2.4 & 3.6
c. Placement of reinforcement, connectors, and anchor bolts	NR	P	C	Sec. 6.1, 6.3.1, 6.3.6, & 6.3.7	Art. 3.2E & 3.4
d. Proportions of site-prepared grout and prestressing grout for bonded tendons	NR	P	P	–	Art. 2.6B & 2.4G.1.b
3. Verify compliance of the following during construction:					
a. Materials and procedures with the approved submittals	NR	P	P	–	Art. 1.5
b. Placement of masonry units and mortar joint construction	NR	P	P	–	Art. 3.3B
c. Size and location of structural members	NR	P	P	–	Art. 3.3F
d. Type, size, and location of anchors, including other details of anchorage of masonry to structural members, frames, or other construction	NR	P	C	Sec. 1.2.1(e), 6.2.1, & 6.3.1	–
e. Welding of reinforcement	NR	C	C	Sec. 6.1.6.1.2	–
f. Preparation, construction, and protection of masonry during cold weather (temperature below 40°F (4.4°C)) or hot weather (temperature above 90°F (32.2°C))	NR	P	P	–	Art. 1.8C & 1.8D
g. Application and measurement of prestressing force	NR	C	C	–	Art. 3.6B
h. Placement of grout and prestressing grout for bonded tendons is in compliance	NR	C	C	–	Art. 3.5 & 3.6C
i. Placement of AAC masonry units and construction of thin-bed mortar joints	NR	C*P*[4]	C	–	Art. 3.3B.9 & 3.3F.1.b
4. Observe preparation of grout specimens, mortar specimens, and/or prisms	NR	P	C	–	Art. 1.4B.2.a.3, 1.4B.2.b.3, 1.4B.2.c.3, 1.4B.3, & 1.4B.4

1. Frequency refers to the frequency of inspection, which may be continuous during the listed task or periodically during the listed task, as defined in the table. NR=Not Required, P=Periodic, C=Continuous. Refer to CBC Section 202 for definition of continuous and periodic inspections.
2. The specific standards referenced are those listed in CBC Chapter 35.
3. Required for the first 5,000 square feet (465 square meters) of AAC Masonry.
4. Required after the first 5,000 square feet (465 square meters) of AAC Masonry.

REQUIRED SPECIAL INSPECTIONS AND TESTS OF CONCRETE CONSTRUCTION

TYPE	CONTINUOUS SPECIAL INSPECTION[1]	PERIODIC SPECIAL INSPECTION[1]	REFERENCED STANDARD[2]	CBC SECTION
1. Inspect reinforcement, including prestressing tendons, and verify placement.	–	X	ACI 318: 20, 25.2, 25.3, 26.6.1–26.6.3	1908.4
2. Reinforcing bar welding:				
a. Verify weldability of reinforcing bars other than ASTM A706;	–	X	AWS D1.4 ACI 318: 26.6.4	–
b. Inspect single-pass fillet welds, maximum 5/16"; and	–	X		
c. Inspect all other welds.	X	–		
3. Inspect anchors cast in concrete.	–	X	ACI 318: 17.8.2	–
4. Inspect anchors post-installed in hardened concrete members.[3]				
a. Adhesive anchors installed in horizontally or upwardly inclined orientations to resist sustained tension loads	X	–	ACI 318: 17.8.2.4	–
b. Mechanical anchors and adhesive anchors not defined in 4.a.	–	X	ACI 318: 17.8.2	
5. Verify use of required design mix.	–	X	ACI 318: 19, 26.4.3, 26.4.4	1904.1, 1904.2, 1908.2, 1908.3
6. Prior to concrete placement, fabricate specimens for strength tests, perform slump and air content tests, and determine the temperature of the concrete.	X	–	ASTM C172 ASTM C31 ACI 318: 26.5, 26.12	1908.10
7. Inspect concrete and shotcrete placement for proper application techniques.	X	–	ACI 318: 26.5	1908.6, 1908.7, 1908.8
8. Verify maintenance of specified curing temperature and techniques.	–	X	ACI 318: 26.5.3–26.5.5	1908.9
9. Inspect prestressed concrete for:				
a. Application of prestressing forces; and	X	–	ACI 318: 26.10	–
b. Grouting of bonded prestressing tendons.	X	–		
10. Inspect erection of precast concrete members.	–	X	ACI 318: 26.9	–
11. Verify in-situ concrete strength, prior to stressing of tendons in post-tensioned concrete and prior to removal of shores and forms from beams and structural slabs.	–	X	ACI 318: 26.11.2	–
12. Inspect formwork for shape, location and dimensions of the concrete member being formed.	–	X	ACI 318: 26.11.1.2(b)	–

1. Refer to CBC Section 202 for definition of continuous and periodic inspections.
2. Where applicable, see also CBC Section 1705.12, Special inspections for seismic resistance.
3. Specific requirements for special inspection shall be included in the research report for the anchor issued by an approved source in accordance with 17.8.2 in ACI 318, or other qualification procedures. Where specific requirements are not provided, special inspection requirements shall be specified by the registered design professional and shall be approved by the building official prior to the commencement of the work.

REQUIRED SPECIAL INSPECTIONS AND TESTS OF SOILS

TYPE	CONTINUOUS SPECIAL INSPECTION[1]	PERIODIC SPECIAL INSPECTION[1]
1. Verify materials below shallow foundations are adequate to achieve the design bearing capacity.	–	X
2. Verify excavations are extended to proper depth and have reached proper material.	–	X
3. Perform classification and testing of compacted fill materials.	–	X
4. Verify use of proper materials, densities and lift thicknesses during placement and compaction of compacted fill.	X	–
5. Prior to placement of compacted fill, inspect subgrade and verify that site has been prepared properly.	–	X

1. Refer to CBC Section 202 for definition of continuous and periodic inspections.

REQUIRED SPECIAL INSPECTIONS OF STRUCTURAL STEEL CONSTRUCTION

TYPE	CONTINUOUS SPECIAL INSPECTION[1]	PERIODIC SPECIAL INSPECTION[1]	REFERENCED STANDARD[2]	AISC 360 SECTION
1. Material verification of high-strength bolts, nuts and washers:				
a. Identification markings to conform to ASTM standards specified in the approved construction documents.	–	X	Applicable ASTM material standards	A3.3
b. Manufacturer's certificate of compliance required.	–	X	–	
2. Inspection of high-strength bolting:				
a. Bearing-type connections.	–	X	–	N5
b. Slip-critical connections.	X	–		
3. Material verification of structural steel:				
a. Identification markings to conform to ASTM standards specified in the approved construction documents.	–	X	ASTM A6 or ASTM A568	A3.1
b. Manufacturer's certified mill test reports.	–	X	ASTM A6 or ASTM A568	
4. Material verification of weld filler materials:				
a. Identification markings to conform to AWS specifications in the approved construction documents.	–	X	Applicable AWS material specifications	A3.5
b. Manufacturer's certificate of compliance required.	–	X	–	
5. Inspection of welding:				
a. Complete and partial penetration groove welds.	X	–	AWS D1.1	N4
b. Multipass fillet welds.	X	–		
c. Single-pass fillet welds > 5/16"	X	–		
d. Single-pass fillet welds ≤ 5/16"	–	X		
6. Inspection of steel frame joint details for compliance with approved construction documents:				
a. Details such as bracing and stiffening.	–	X	–	–
b. Member locations.	–	X		
c. Application of joint details at each connection.	–	X		

1. Refer to CBC Section 202 for definition of continuous and periodic inspections.
2. Where applicable, see also CBC Section 1705.12, Special inspections for seismic resistance.

REQUIRED SPECIAL INSPECTIONS AND TESTS OF POST-INSTALLED CONCRETE ANCHORS

TYPE	CONTINUOUS SPECIAL INSPECTION[1]	PERIODIC SPECIAL INSPECTION[1]	PRODUCT NAME AND EVALUATION REPORT REFERENCE
EXPANSION ANCHORS			
1. During anchor installation, verify the following:			Simpson Strong-Bolt 2 ICC ESR-3037 or Hilti Kwik Bolt TZ2 ICC ESR-4266
a. Anchor type	–	X	
b. Anchor dimensions	–	X	
c. Hole cleanliness/cleaning procedures	–	X	
d. Concrete type/compressive strength/thickness	–	X	
e. Drill bit diameter	–	X	
f. Anchor embedment depth	–	X	
g. Edge/End distance(s)/Anchor spacing(s)	–	X	
h. Tightening Torque	–	X	
i Compliance with the appropriate Evaluation Report and manufacturer's published installation instructions, as well as the approved construction documents.	–	X	
EPOXY ANCHORS			
1. During the initial installation of a series of anchors of the same type and size, installed by the same construction personnel, verify the following[2]:			Simpson SET-3G ICC ESR-4057 or Hilti HIT-HY 200 V3 ICC ESR-4868
a. Adhesive name, expiration date, proper nozzle	–	X	
b. Anchor material, grade, diameter, length and cleanliness	–	X	
c. Hole cleanliness/cleaning procedures	–	X	
d. Concrete type/compressive strength/thickness	–	X	
e. Drill bit diameter	–	X	
f. Anchor embedment depth	–	X	
g. Edge/End distance(s)/Anchor spacing(s)	–	X	
h. Compliance with the appropriate Evaluation Report and manufacturer's published installation instructions, as well as the approved construction documents.	–	X	

1. Refer to CBC Section 202 for definition of continuous and periodic inspections.
2. Any change in anchor product or personnel performing the installation requires an initial reinspection. For ongoing installations over an extended period, the special inspector must make regular inspections to confirm proper handling and installation of the product.

REQUIRED SPECIAL INSPECTIONS AND TESTS OF POST-INSTALLED MASONRY ANCHORS

TYPE	CONTINUOUS SPECIAL INSPECTION[1]	PERIODIC SPECIAL INSPECTION[1]	PRODUCT NAME AND EVALUATION REPORT REFERENCE
EXPANSION ANCHORS			
1. During anchor installation, verify the following:			Simpson Strong-Bolt 2 IAPMO UES ER-240 or Hilti Kwik Bolt TZ2 ICC ESR-4561
a. Anchor type	X	–	
b. Anchor dimensions	X	–	
c. Hole cleanliness/cleaning procedures	X	–	
d. Grout and mortar compressive strengths	X	–	
e. Masonry unit type/compliance with ASTM C90 prism compressive strength (where required)	X	–	
f. Drill bit diameter	X	–	
g. Anchor embedment depth	X	–	
h. Edge/End distance(s)/Anchor spacing(s)	X	–	
i. Tightening Torque	X	–	
j. Compliance with the appropriate Evaluation Report and manufacturer's published installation instructions, as well as the approved construction documents.	X	–	
EPOXY ANCHORS			
1. During anchor installation, verify the following:			Simpson SET-3G ICC ESR-4844 or Hilti HIT-HY 270 ICC ESR-4143
a. Adhesive name, expiration date, proper nozzle	–	X	
b. Anchor material, grade, diameter, length and cleanliness	–	X	
c. Hole cleanliness/cleaning procedures	–	X	
d. Grout and mortar compressive strengths	–	X	
e. Masonry unit type/compliance with ASTM C90 prism compressive strength (where required)	–	X	
f. Drill bit diameter	–	X	
g. Anchor embedment depth	–	X	
h. Edge/End distance(s)/Anchor spacing(s)	–	X	
i Compliance with the appropriate Evaluation Report and manufacturer's published installation instructions, as well as the approved construction documents.	–	X	

1. Refer to CBC Section 202 for definition of continuous and periodic inspections.

PASE
408.957.9220 www.pase.com

Designer Stamp: REGISTERED PROFESSIONAL ENGINEER TIMOTHY E. ELLIOTT C 63260 S 4946 CIVIL STRUCTURAL STATE OF CALIFORNIA 02/06/25

Record Drawings
Designer: _____ Date: _____
Public Works Inspector: _____ Date: _____
Utility/Facility Dept. Head: _____ Date: _____
Project Engineer: _____ Date: _____
Public Improvements Initially Accepted by the City Council on: _____ Res. No. _____

Drawn By: REM Date: 02/06/25
Checked By: TEE Date: 02/06/25
Designed By: TEE Date: 02/06/25

Revisions

Num.	Description	Engr. Aprv.	Date
1			

CITY OF MILPITAS
ENGINEERING DIVISION
McCANDLESS WELL FACILITY
PROJECT NO. 7076
STATEMENT OF SPECIAL INSPECTIONS

RECOMMENDED FOR BIDDING BY: Lyhak Eam DATE: 2/7/2025
LYHAK EAM, P.E., Public Works Division Manager – Engineering

DWG NO. S02
PROJECT NO. 7076
Rec. Dwg No.
SCALE: AS SHOWN
SHEET 34 OF 70

Y:\Projects\23-DWGS\23-336 McCandless Well Facility\23-336S02.dwg 2/5/2025 5:17 PM telliott

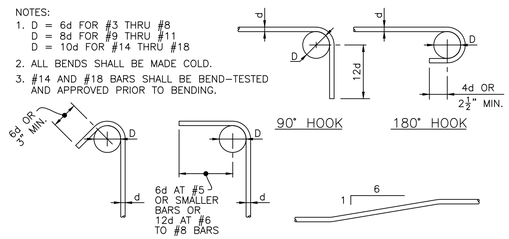

DETAIL 1 / S03 — NTS

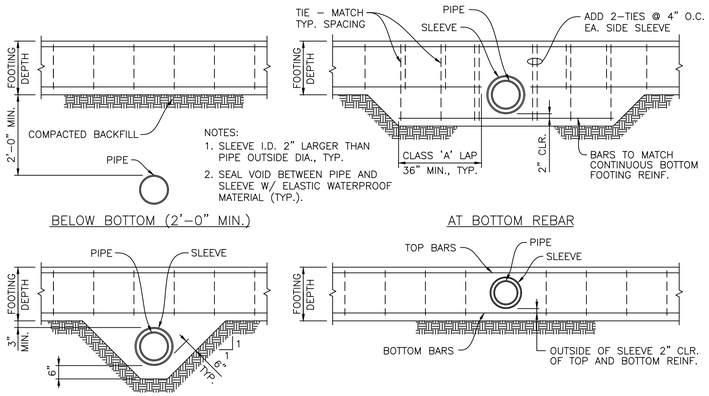

DETAIL 2 / S03 — NTS

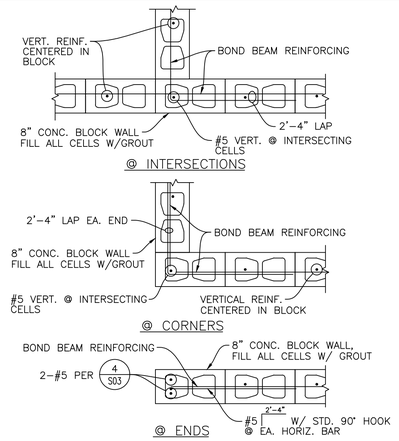

DETAIL 3 / S03 — 3/4" = 1'-0"

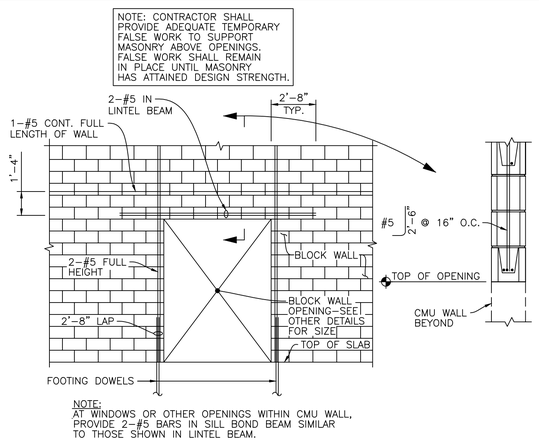

TYPICAL REINF. AROUND OPENING IN CMU WALL OVER 16" SQUARE

DETAIL 4 / S03 — NTS

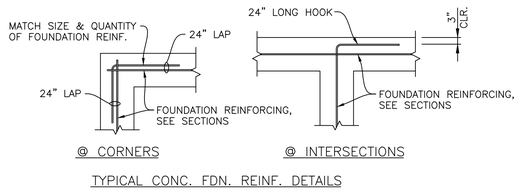

DETAIL 5 / S03 — NTS

CONCRETE REINFORCING LAP SPLICES		
CONCRETE STRENGTH	f'_c = 4000 PSI	
BAR SIZE	TOP BARS	OTHER BARS
#3	1'-4"	1'-4"
#4	1'-8"	1'-4"
#5	2'-1"	1'-7"
#6	2'-5"	1'-11"
#7	3'-7"	2'-9"
#8	4'-1"	3'-1"
#9	4'-7"	3'-6"
#10	5'-2"	3'-11"
#11	5'-8"	4'-5"

NOTES:
1. LAP SPLICE LENGTHS SHALL BE INCREASED BY 50% WHERE BAR CLEAR COVER IS LESS THAN 2 BAR DIAMETERS OR WHERE SPACING BETWEEN BARS BEING SPLICED IS LESS THAN 5 BAR DIAMETERS.
2. TOP BARS ARE HORIZONTAL BARS WITH MORE THAN 12 INCHES OF CONCRETE CAST BELOW THE BARS.

DETAIL 6 / S03 — NTS

MASONRY REINFORCING LAP SPLICES	
MASONRY STRENGTH	f'_m = 2000 PSI
BAR SIZE	LAP SPLICE LENGTH
#3	1'-0"
#4	1'-6"
#5	2'-4"
#6	4'-4"
#7	5'-10"

NOTES:
1. CLEAR COVER TO BARS BEING SPLICED SHALL BE A MINIMUM OF 2½ INCHES.

DETAIL 7 / S03 — NTS

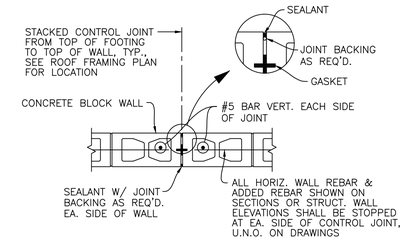

DETAIL 8 / S03 — 3/4" = 1'-0"

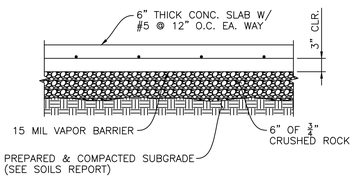

DETAIL 9 / S03 — 3/4" = 1'-0"

NOTES:
1. SAW-CUTTING SHALL BE COMPLETED NO MORE THAN 12 HOURS AFTER PLACING CONCRETE SLAB.
2. JOINTS SHALL BE LOCATED AT 12'-0" O.C. MAX.
3. IN LIEU OF SAW-CUTTING, CONTRACTOR MAY EMBED A 1½" DEEP ZIP STRIP IN SLAB.

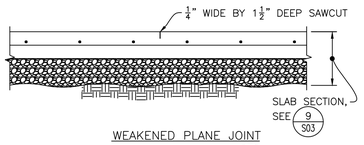

DETAIL 10 / S03 — 3/4" = 1'-0"

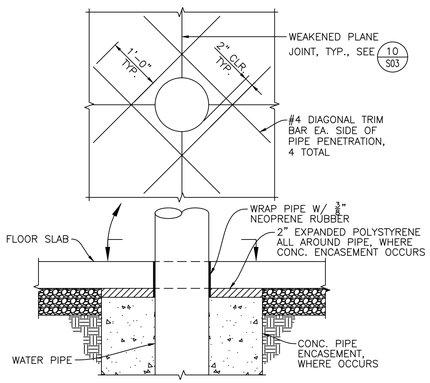

DETAIL 11 / S03 — 3/4" = 1'-0"

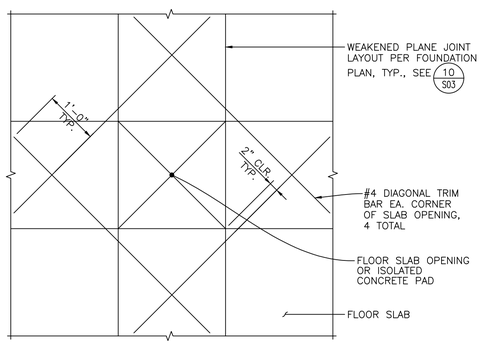

DETAIL 12 / S03 — 3/4" = 1'-0"

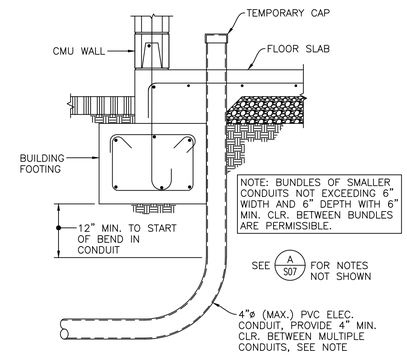

DETAIL 13 / S03 — 3/4" = 1'-0"

PASE
408.957.9220 www.pase.com

Designer Stamp: REGISTERED PROFESSIONAL ENGINEER TIMOTHY E. ELLIOTT C 63260 S 4946 STRUCTURAL STATE OF CALIFORNIA 02/06/25

Record Drawings

Designer: _____ Date: _____
Public Works Inspector: _____ Date: _____
Utility/Facility Dept. Head: _____ Date: _____
Project Engineer: _____ Date: _____
Public Improvements Initially Accepted by the City Council on: _____ Res. No. _____

Drawn By: REM Date: 02/06/25
Checked By: TEE Date: 02/06/25
Designed By: TEE Date: 02/06/25

Revisions

Num.	Description	Engr. Aprv.	Date
1			

CITY OF MILPITAS
ENGINEERING DIVISION

McCANDLESS WELL FACILITY
PROJECT NO. 7076

TYPICAL STRUCTURAL DETAILS

RECOMMENDED FOR BIDDING BY: Lyhak Eam DATE: 2/7/2025
LYHAK EAM, P.E., Public Works Division Manager – Engineering

DWG NO. S03
PROJECT NO. 7076
Rec. Dwg No.
SCALE: AS SHOWN
SHEET 35 OF 70

Y:\Projects\23-DWGS\23-336 McCandless Well Facility\23-336S03.dwg 2/5/2025 5:21 PM telliott

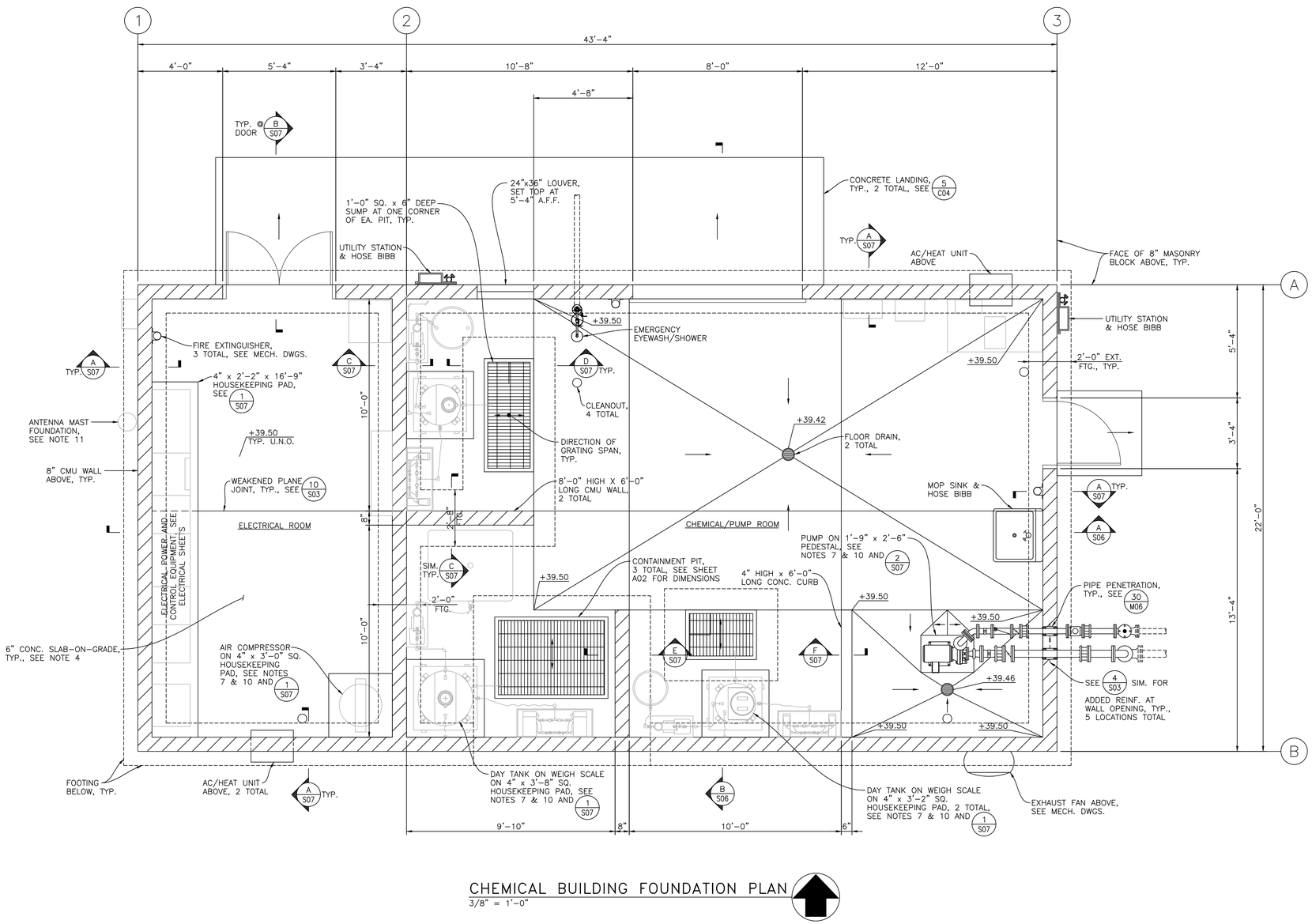

CHEMICAL BUILDING FOUNDATION PLAN
3/8" = 1'-0"

FOUNDATION PLAN NOTES:

1. SEE GENERAL NOTES & SPECIFICATIONS ON SHEET S01. SEE FLOOR PLAN ON SHEET A02 FOR DIMENSIONS & NOTES NOT SHOWN. SEE MECH. DWGS. FOR DESCRIPTION OF ALL EQUIPMENT AND PLUMBING NOT NOTED.
2. +39.50 DENOTES TOP OF CONCRETE SLAB OR PAD ELEVATION. WHERE GIVEN, ELEVATION BELOW LINE INDICATES TOP OF CONCRETE SLAB ELEVATION IN TRENCH OR PIT.
3. → DENOTES DIRECTION OF SLAB SLOPE. PROVIDE A MIN. SLOPE OF 0.5% AT SLABS & TRENCHES INDICATED.
4. SLAB SECTION:
   - 6" CONCRETE SLAB W/ #5 @ 12" O.C. EACH WAY
   - 15 MIL VAPOR BARRIER
   - 6" OF ¾" CRUSHED ROCK
   - SOIL SUBGRADE PREPARED PER SOILS REPORT
5. DENOTES MASONRY BLOCK WALL
6. MATERIAL SPECIFICATIONS
   CONCRETE: MIN. 28 DAY STRENGTH = 4,000 psi
   REINFORCING STEEL: ASTM A615, GRADE 60
   CONCRETE MASONRY: ASTM C90, f'c = 2,000 psi
   MORTAR: ASTM C270, TYPE S
   GROUT: ASTM C476, f'c = 2,500 psi
   CMU ASSEMBLY: f'm = 2,000 psi
7. ANCHORAGE OF EQUIPMENT SHALL BE BY THE CONTRACTOR. CONTRACTOR SHALL SUBMIT DRAWINGS AND CALCULATIONS FOR THE EQUIPMENT ANCHORAGE FOR REVIEW. SEE PROJECT SPECIFICATIONS. MIN. ANCHORAGE SHALL BE A ½"ø ANCHOR BOLT AT EACH CORNER OF EQUIPMENT BASE, 4 TOTAL MIN.
8. SEE SHEET A03 FOR ARCHITECTURAL FINISH SCHEDULE SHOWING INTERIOR FINISH REQUIREMENTS.
9. SEE SHEET S03 FOR TYPICAL CONCRETE AND MASONRY DETAILS.
10. EQUIPMENT PAD DIMENSIONS SHALL BE VERIFIED WITH EQUIPMENT MANUFACTURER PRIOR TO BEGINNING CONSTRUCTION.
11. SEE ELEC. DWGS. FOR ANTENNA MAST FOUNDATION. INCORPORATE ANTENNA MAST FOUNDATION INTO BUILDING FOUNDATION AND CAST MONOLITHIC. FOUNDATION REBAR SHALL BE CONT. THROUGH ANTENNA MAST FOUNDATION. ADJUST REBAR AS NECESSARY TO ACCOMMODATE EMBEDDED ANTENNA MAST.

PASE
408.957.9220 www.pase.com

Designer Stamp: REGISTERED PROFESSIONAL ENGINEER TIMOTHY E. ELLIOTT C 63260 S 4946 STRUCTURAL STATE OF CALIFORNIA 02/06/25

Record Drawings

Designer: _____ Date: _____
Public Works Inspector: _____ Date: _____
Utility/Facility Dept. Head: _____ Date: _____
Project Engineer: _____ Date: _____
Public Improvements Initially Accepted by the City Council on: _____ Res. No. _____

Drawn By: REM Date: 02/06/25
Checked By: TEE Date: 02/06/25
Designed By: TEE Date: 02/06/25

Revisions

Num.	Description	Engr. Aprv.	Date
1			

CITY OF MILPITAS
ENGINEERING DIVISION

McCANDLESS WELL FACILITY
PROJECT NO. 7076

CHEMICAL BUILDING FOUNDATION PLAN

RECOMMENDED FOR BIDDING BY: Lyhak Eam DATE: 2/7/2025
LYHAK EAM, P.E., Public Works Division Manager – Engineering

DWG NO. S04
PROJECT NO. 7076
Rec. Dwg No.
SCALE: AS SHOWN
SHEET 36 OF 70

Y:\Projects\23-DWGS\23-336 McCandless Well Facility\23-336S04.dwg 2/6/2025 2:26 PM telliott

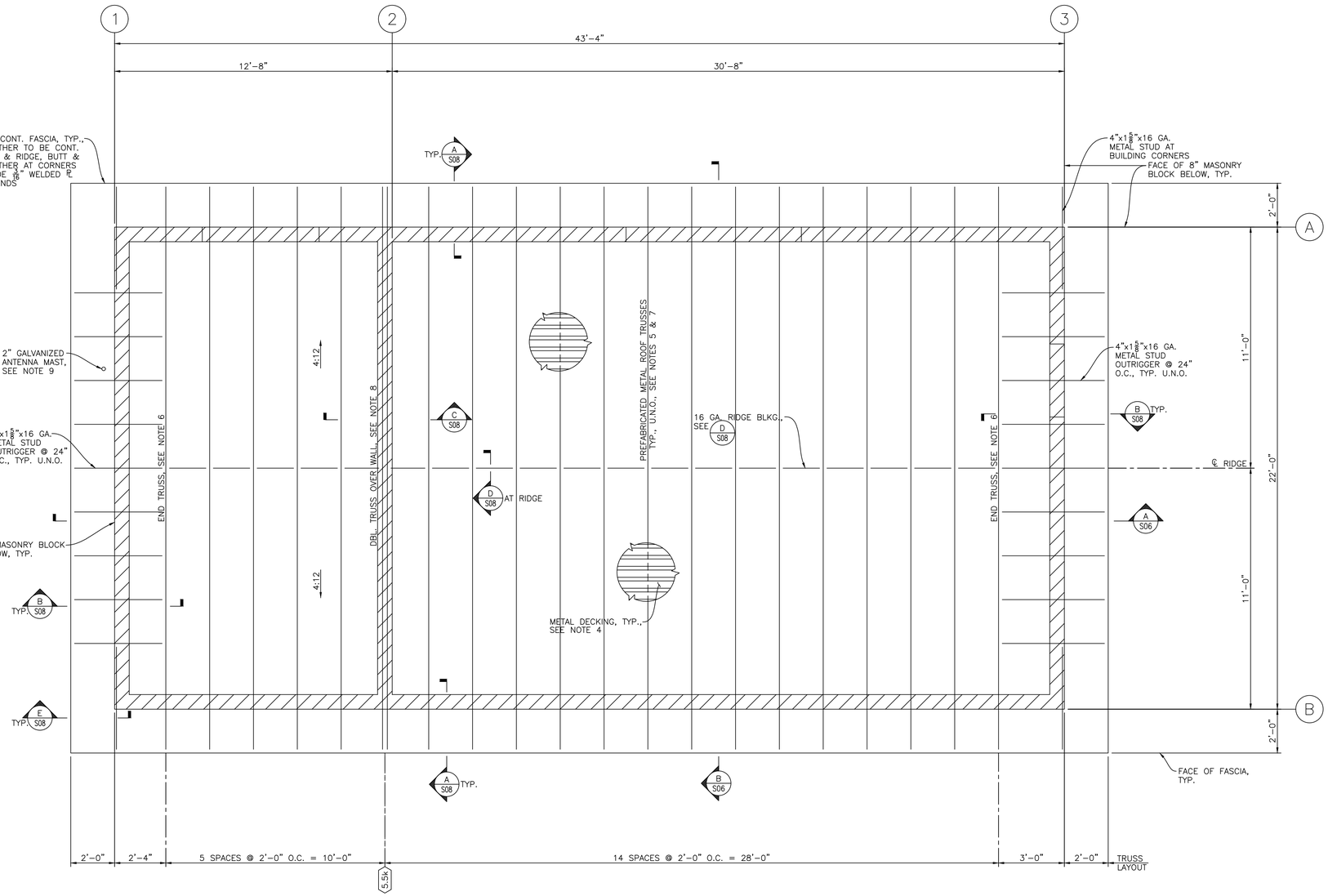

CHEMICAL BUILDING ROOF FRAMING PLAN
3/8" = 1'-0"

ROOF FRAMING PLAN NOTES:

1. SEE GENERAL NOTES & SPECIFICATIONS ON SHEET S01.
2. 4:12 DENOTES DIRECTION AND SLOPE OF ROOF.
3. DENOTES MASONRY BLOCK WALL.
4. METAL DECKING SHALL BE AS SPECIFIED ON SHEET S01 AND IN THE PROJECT SPECIFICATIONS.
5. ALL TRUSSES SHALL BE CAPABLE OF CARRYING A MINIMUM LATERAL SEISMIC LOAD OF 1,500 LBS. (SERVICE LOAD LEVEL) EVENLY DISTRIBUTED TO THE TRUSS TOP CHORD.
6. END TRUSS LOADING FROM OUTRIGGERS AND FASCIAS SHALL BE AS FOLLOWS:

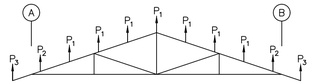

LOAD	DEAD	LIVE
P_1	45 LBS.	60 LBS.
P_2	79 LBS.	123 LBS.
P_3	66 LBS.	88 LBS.

END TRUSS

7. CONTRACTOR SHALL COORDINATE ROOF TRUSS LAYOUT W/ ROOF TRUSS FABRICATOR PRIOR TO SUBMITTING ROOF TRUSS SUBMITTAL TO THE ENGINEER FOR REVIEW.
8. X.Xk DENOTES LATERAL SEISMIC LOAD (SERVICE LOAD LEVEL) EVENLY DISTRIBUTED TO THE TRUSS TOP CHORD, SEE C S08. DBL. TRUSS ADJACENT TO LINE 2 SHALL BE CONTINUOUS OVER ITS LENGTH AND CAPABLE OF TRANSFERRING THE LATERAL LOAD INTO THE CMU WALL BELOW.
9. SEE ELEC. DWGS. FOR ANTENNA MAST ATTACHMENT TO BUILDING WALL. AT ROOF, PROVIDE ADDITIONAL 4"x1 5/8" METAL STUD BETWEEN OUTRIGGERS AND ATTACH ANTENNA MAST TO METAL STUD WITH 2" PIPE CLAMP AND SCREWS. WATERPROOF ROOF PENETRATION PER ELEC. DWGS.

PASE
408.957.9220 www.pase.com

Designer Stamp: REGISTERED PROFESSIONAL ENGINEER TIMOTHY E. ELLIOTT C 63260 S 4946 CIVIL STRUCTURAL STATE OF CALIFORNIA 02/06/25

Record Drawings

Designer: _____ Date: _____
Public Works Inspector: _____ Date: _____
Utility/Facility Dept. Head: _____ Date: _____
Project Engineer: _____ Date: _____
Public Improvements Initially Accepted by the City Council on: _____ Res. No. _____

Drawn By: REM Date: 02/06/25
Checked By: TEE Date: 02/06/25
Designed By: TEE Date: 02/06/25

Revisions

Num.	Description	Engr. Aprv.	Date
△			

CITY OF MILPITAS
ENGINEERING DIVISION

McCANDLESS WELL FACILITY
PROJECT NO. 7076

CHEMICAL BUILDING ROOF FRAMING PLAN

RECOMMENDED FOR BIDDING BY: Lyhak Eam DATE: 2/7/2025
LYHAK EAM, P.E., Public Works Division Manager – Engineering

DWG NO. S05
PROJECT NO. 7076
Rec. Dwg No.
SCALE: AS SHOWN
SHEET 37 OF 70

Y:\Projects\23-DWGS\23-336 McCandless Well Facility\23-336S05.dwg 2/5/2025 9:30 PM telliott

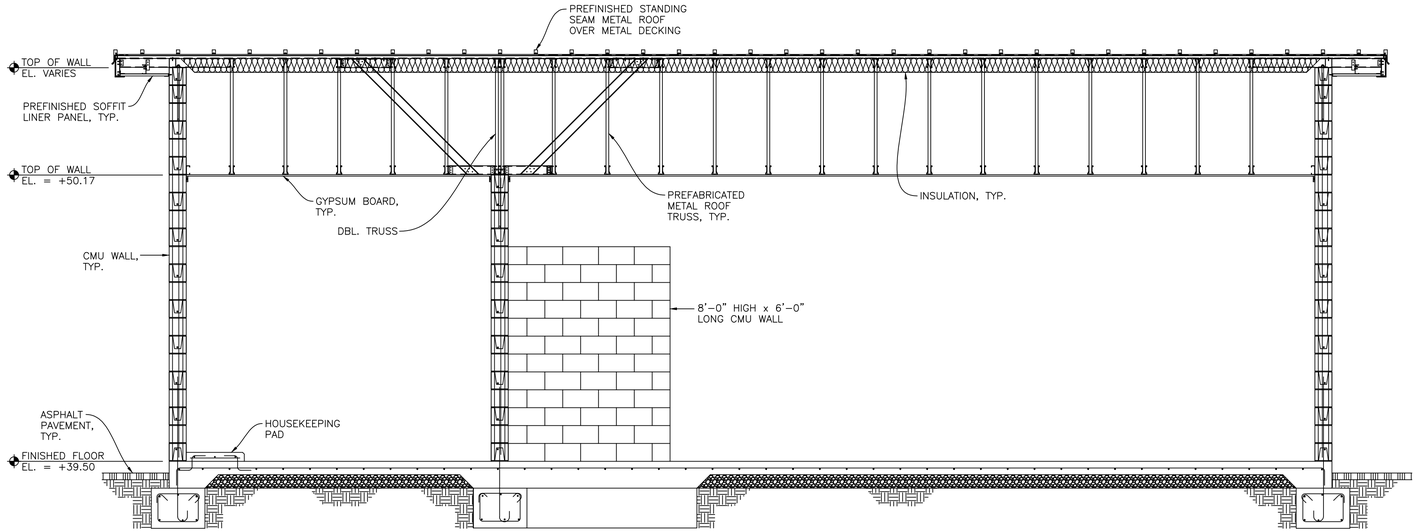

SECTION A
3/8" = 1'-0"
S06

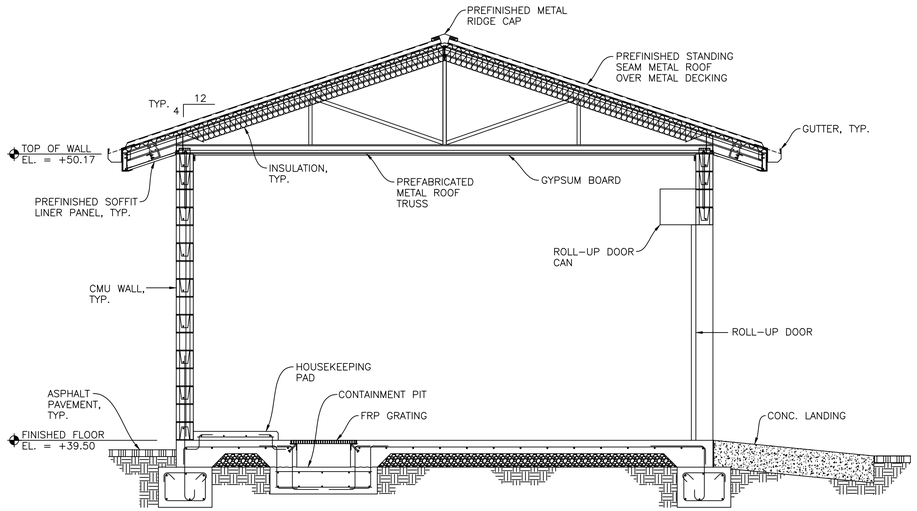

SECTION B
3/8" = 1'-0"
S06

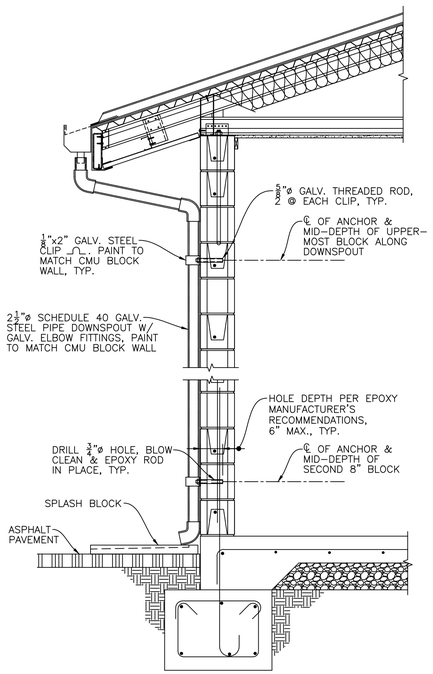

DOWNSPOUT/SPLASH BLOCK DETAIL

SECTION C
3/4" = 1'-0"
S06

PASE
408.957.9220 www.pase.com

Designer Stamp:

REGISTERED PROFESSIONAL ENGINEER
TIMOTHY E. ELLIOTT
C 63260
E 4946
CIVIL & STRUCTURAL
STATE OF CALIFORNIA

02/06/25

Record Drawings

Designer: _____ Date: _____

Public Works Inspector: _____ Date: _____

Utility/Facility Dept. Head: _____ Date: _____

Project Engineer: _____ Date: _____

Public Improvements Initially Accepted by the City Council on: _____ Res. No. _____

Drawn By: REM Date: 02/06/25

Checked By: TEE Date: 02/06/25

Designed By: TEE Date: 02/06/25

Revisions

Num.	Description	Engr. Aprv.	Date
1			

CITY OF MILPITAS
ENGINEERING DIVISION

McCANDLESS WELL FACILITY
PROJECT NO. 7076

CHEMICAL BUILDING SECTIONS

RECOMMENDED FOR BIDDING BY: Lyhak Eam DATE: 2/7/2025
LYHAK EAM, P.E., Public Works Division Manager – Engineering

DWG NO. S06
PROJECT NO. 7076
Rec. Dwg No.
SCALE: AS SHOWN
SHEET 38 OF 70

Y:\Projects\23-DWGS\23-336 McCandless Well Facility\23-336S06.dwg 2/5/2025 7:06 PM telliott

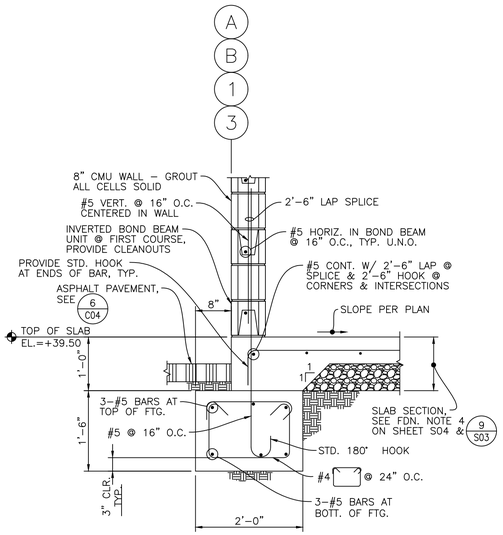

SECTION A
3/4" = 1'-0"
S07

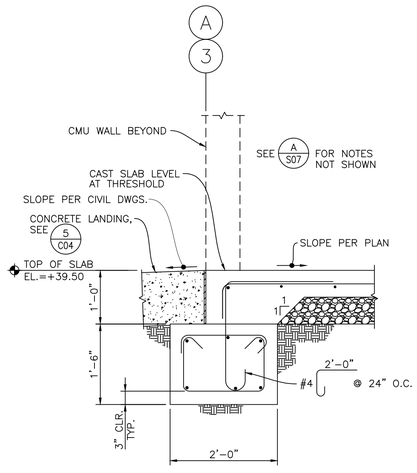

SECTION B
3/4" = 1'-0"
S07

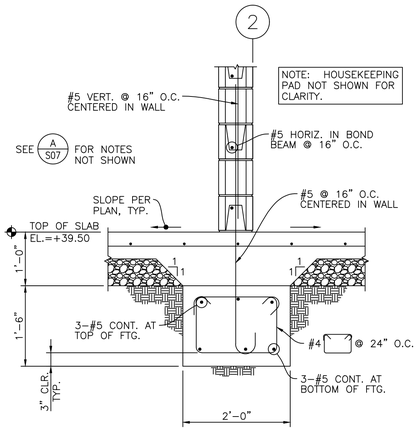

SECTION C
3/4" = 1'-0"
S07

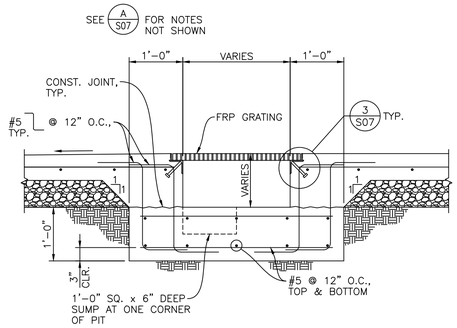

SECTION D
3/4" = 1'-0"
S07

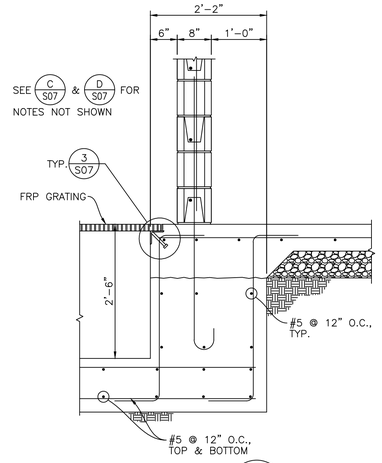

SECTION E
3/4" = 1'-0"
S07

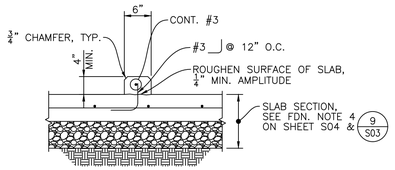

SECTION F
3/4" = 1'-0"
S07

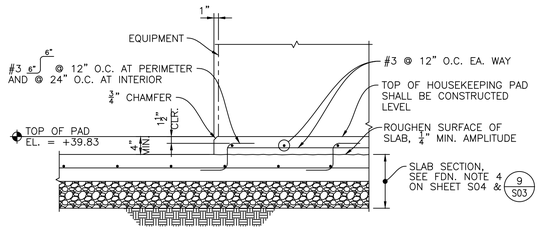

HOUSEKEEPING PAD DETAIL

DETAIL 1
3/4" = 1'-0"
S07

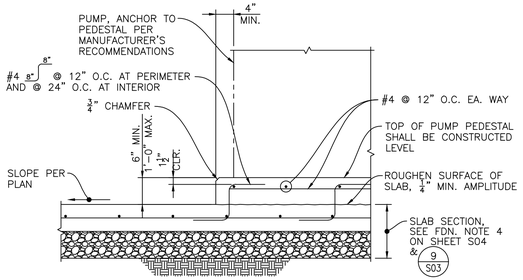

PUMP PEDESTAL DETAIL

DETAIL 2
3/4" = 1'-0"
S07

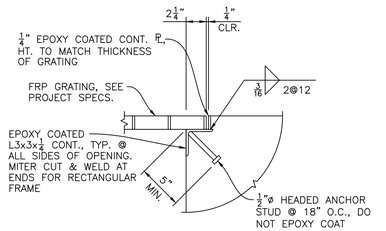

FRP GRATING SUPPORT DETAIL

DETAIL 3
1 1/2" = 1'-0"
S07

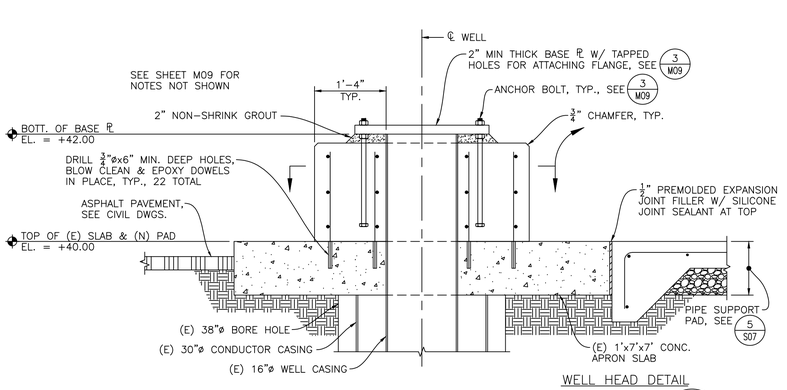

WELL HEAD DETAIL

DETAIL 4
3/4" = 1'-0"
S07

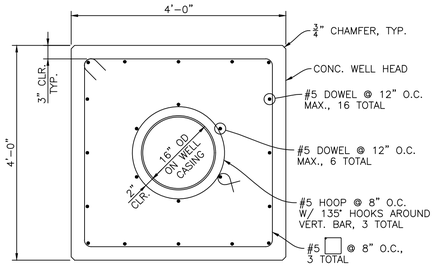

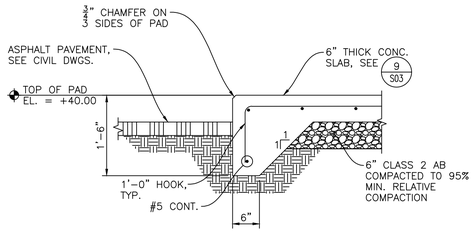

WELL HEAD PIPE SUPPORT PAD DETAIL

DETAIL 5
3/4" = 1'-0"
S07

PASE
408.957.9220 www.pase.com

Designer Stamp:
REGISTERED PROFESSIONAL ENGINEER TIMOTHY E. ELLIOTT C 63260 S 4946 CIVIL STRUCTURAL STATE OF CALIFORNIA
02/06/25

Record Drawings

Designer: _____ Date: _____
Public Works Inspector: _____ Date: _____
Utility/Facility Dept. Head: _____ Date: _____
Project Engineer: _____ Date: _____
Public Improvements Initially Accepted by the City Council on: _____ Res. No. _____

Drawn By: REM Date: 02/06/25
Checked By: TEE Date: 02/06/25
Designed By: TEE Date: 02/06/25

Revisions

Num.	Description	Engr. Aprv.	Date
1			

CITY OF MILPITAS
ENGINEERING DIVISION

McCANDLESS WELL FACILITY
PROJECT NO. 7076

FOUNDATION SECTIONS & DETAILS

RECOMMENDED FOR BIDDING BY: *Lyhak Eam* DATE: 2/7/2025
LYHAK EAM, P.E., Public Works Division Manager – Engineering

DWG NO. S07
PROJECT NO. 7076
Rec. Dwg No.
SCALE: AS SHOWN
SHEET 39 OF 70

Y:\Projects\23-DWGS\23-336 McCandless Well Facility\23-336S07.dwg 2/5/2025 7:11 PM telliott

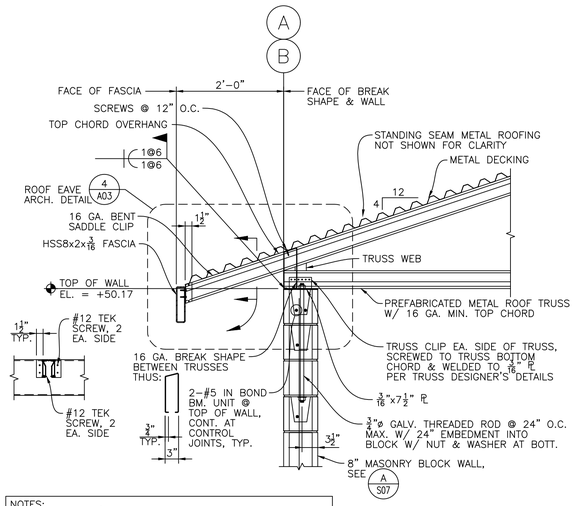

SECTION A
3/4" = 1'-0"
S08

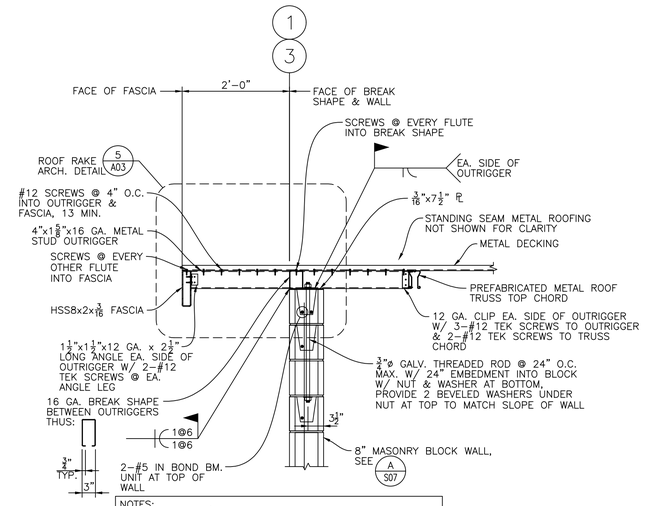

SECTION B
3/4" = 1'-0"
S08

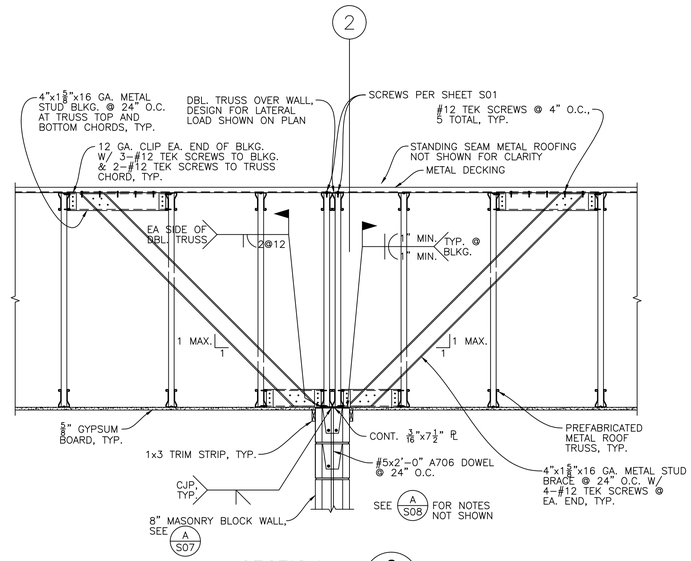

SECTION C
3/4" = 1'-0"
S08

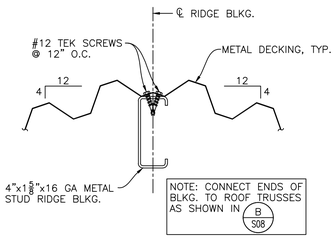

SECTION D
3" = 1'-0"
S08

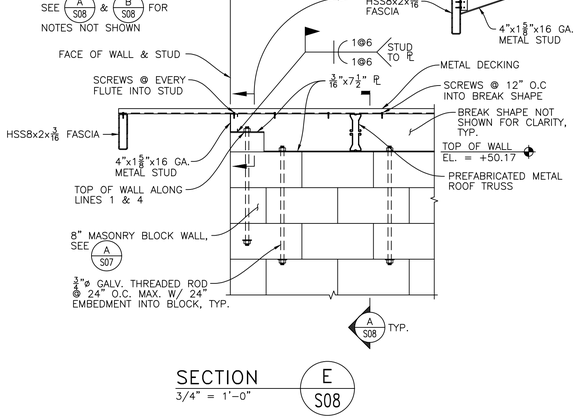

SECTION E
3/4" = 1'-0"
S08

PASE
408.957.9220 www.pase.com

Designer Stamp:
REGISTERED PROFESSIONAL ENGINEER
TIMOTHY E. ELLIOTT
C 63260
S 4946
STRUCTURAL
STATE OF CALIFORNIA
02/06/25

Record Drawings

Designer: _____ Date: _____
Public Works Inspector: _____ Date: _____
Utility/Facility Dept. Head: _____ Date: _____
Project Engineer: _____ Date: _____
Public Improvements Initially Accepted by the City Council on: _____ Res. No. _____

Drawn By: REM Date: 02/06/25
Checked By: TEE Date: 02/06/25
Designed By: TEE Date: 02/06/25

Revisions

Num.	Description	Engr. Aprv.	Date
△			

CITY OF MILPITAS
ENGINEERING DIVISION

McCANDLESS WELL FACILITY
PROJECT NO. 7076

ROOF FRAMING SECTIONS & DETAILS

RECOMMENDED FOR BIDDING BY: Lyhak Eam DATE: 2/7/2025
LYHAK EAM, P.E., Public Works Division Manager – Engineering

DWG NO. S08
PROJECT NO. 7076
Rec. Dwg No.
SCALE: AS SHOWN
SHEET 40 OF 70

Y:\Projects\23-DWGS\23-336 McCandless Well Facility\23-336S08.dwg 2/5/2025 7:20 PM tellicott

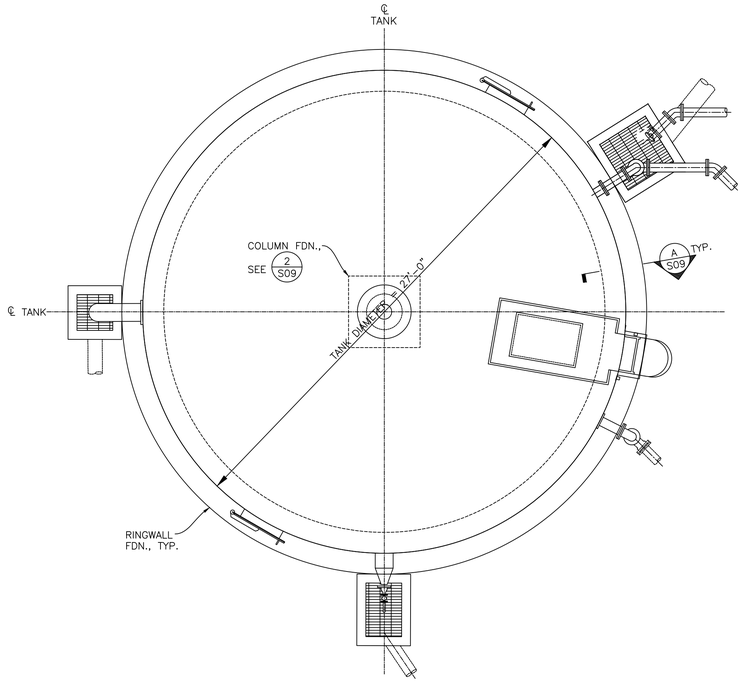

FOUNDATION PLAN
1/4" = 1'-0"

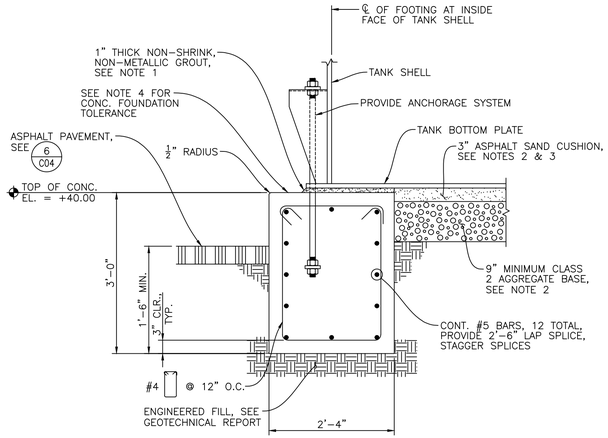

SECTION A/S09
3/4" = 1'-0"

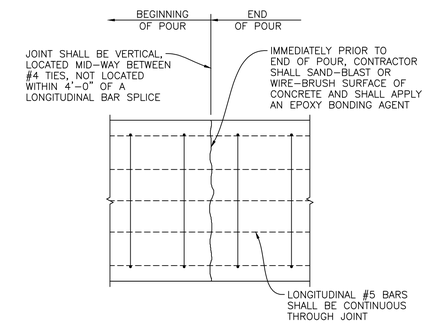

RINGWALL CONSTRUCTION JOINT DETAIL

DETAIL 1/S09
3/4" = 1'-0"

BACKWASH STORAGE TANK STRUCTURAL DESIGN CRITERIA

1. TANK DIMENSIONS:
   FLUID CAPACITY = 48,000 GALLONS AT OVERFLOW
   INSIDE DIAMETER = 27 FEET
   STATIC WATER HEIGHT = 11'-3" AT OVERFLOW
   MIN. FOOTING DEPTH = 1'-6" MIN. BELOW LOWEST ADJACENT GRADE
   DESIGN AMBIENT TEMPERATURE = 20 F TO 110 F
   MINIMUM FREEBOARD = 9.90"

2. VERTICAL DESIGN:
   ROOF LIVE LOAD = 20 PSF (NO REDUCTION)
   ALLOWABLE SOIL PRESSURE FOR
   DL <= 1,600 PSF,
   DL + LL <= 2,400 PSF,
   DL + LL + INCLUDE SEISMIC OR WIND <= 3,200 PSF
   SNOW LOAD = 0 PSF

3. LATERAL DESIGN:
   WIND – DESIGN PER AWWA D100-21 AND 2022 CBC, INCLUDING THE FOLLOWING REQUIREMENTS:
   – BASIC WIND SPEED = 100 MPH
   – EXPOSURE C

   SEISMIC – DESIGN PER AWWA D100-21 AND 2022 CBC, INCLUDING THE FOLLOWING REQUIREMENTS:
   – RISK CATEGORY III, I_E = 1.25
   – SITE CLASS E
   – RESPONSE MODIFICATION FACTORS:
   FOR AN ANCHORED TANK, R_I = 3.0 AND R_C = 1.5
   – MAPPED MCE SPECTRAL RESPONSE ACCELERATIONS:
   S_S = 1.833g AND S_1 = 0.698g
   S_{DS} = 1.077g AND S_{D1} = 2.088g

4. FOUNDATION DESIGN SHOWN IS MINIMUM REQUIREMENTS. SUBMIT FOUNDATION DESIGN WITH TANK DESIGN CALCULATIONS.

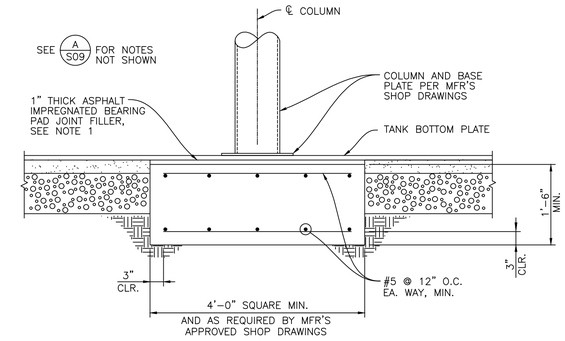

INTERNAL COLUMN FOOTING DETAIL

DETAIL 2/S09
3/4" = 1'-0"

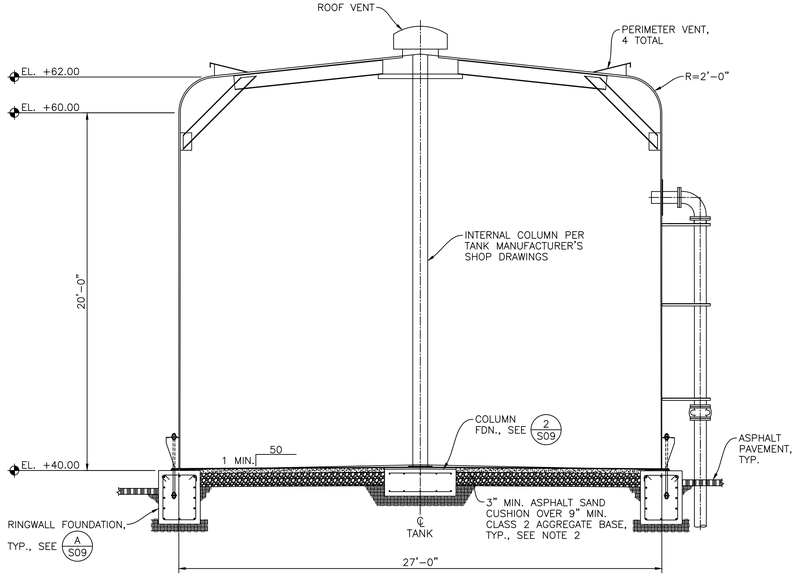

TYPICAL SECTION
1/4" = 1'-0"

NOTES:

1. NON-SHRINK, NON-METALLIC GROUT SHALL COMPLETELY COVER THE CONCRETE RINGWALL FOUNDATION UNDER THE TANK BOTTOM PLATE. ASPHALT IMPREGNATED BEARING PAD JOINT FILLER SHALL COMPLETELY COVER CONCRETE ENCASEMENTS AND COLUMN FOUNDATIONS UNDER THE TANK BOTTOM PLATE. SEE PROJECT SPECIFICATION SECTION 13208.
2. ASPHALT SAND CUSHION SHALL CONSIST OF LIQUID ASPHALT SC-70 AND CLEAN SAND BATCH PLANT MIXED. SEE PROJECT SPECIFICATION SECTION 13208. CLASS 2 AGGREGATE BASE SHALL BE PER CALTRANS 2023 STANDARD SPECIFICATIONS SECTION 26-1.02B.
3. WHERE THE ASPHALT SAND CUSHION MEETS THE CONCRETE RINGWALL OR CONCRETE ENCASEMENT, IT SHALL BE 1" HIGHER THAN THE CONCRETE.
4. TOP OF CONCRETE RINGWALL FOUNDATION SHALL BE STEEL TROWEL FINISH, TOP TO BE LEVEL WITHIN ± 1/8" IN ANY 30', ± 1/4" OVERALL, WHICHEVER IS SMALLER.
5. IF POSSIBLE, ENTIRE RINGWALL FOUNDATION SHALL BE CAST MONOLITHICALLY. IF NOT POSSIBLE, A SINGLE CONSTRUCTION JOINT WILL BE ALLOWED PER DETAIL 1/S09.

PASE
408.957.9220 www.pase.com

Designer Stamp:
REGISTERED PROFESSIONAL ENGINEER
TIMOTHY E. ELLIOTT
C 63260
S 4946
CIVIL & STRUCTURAL
STATE OF CALIFORNIA
02/06/25

Record Drawings
Designer: _____ Date: _____
Public Works Inspector: _____ Date: _____
Utility/Facility Dept. Head: _____ Date: _____
Project Engineer: _____ Date: _____
Public Improvements Initially Accepted by the City Council on: _____ Res. No. _____

Drawn By: REM Date: 02/06/25
Checked By: TEE Date: 02/06/25
Designed By: TEE Date: 02/06/25

Revisions

Num.	Description	Engr. Aprv.	Date
1			

CITY OF MILPITAS
ENGINEERING DIVISION

McCANDLESS WELL FACILITY
PROJECT NO. 7076

BACKWASH STORAGE TANK PLAN, SECTIONS & DETAILS

RECOMMENDED FOR BIDDING BY: Lyhak Eam DATE: 2/7/2025
LYHAK EAM, P.E., Public Works Division Manager – Engineering

DWG NO. S09
PROJECT NO. 7076
Rec. Dwg No.
SCALE: AS SHOWN
SHEET 41 OF 70

Y:\Projects\23-DWCS\23-336 McCandless Well Facility\23-336S09.dwg 2/5/2025 7:26 PM tellicott

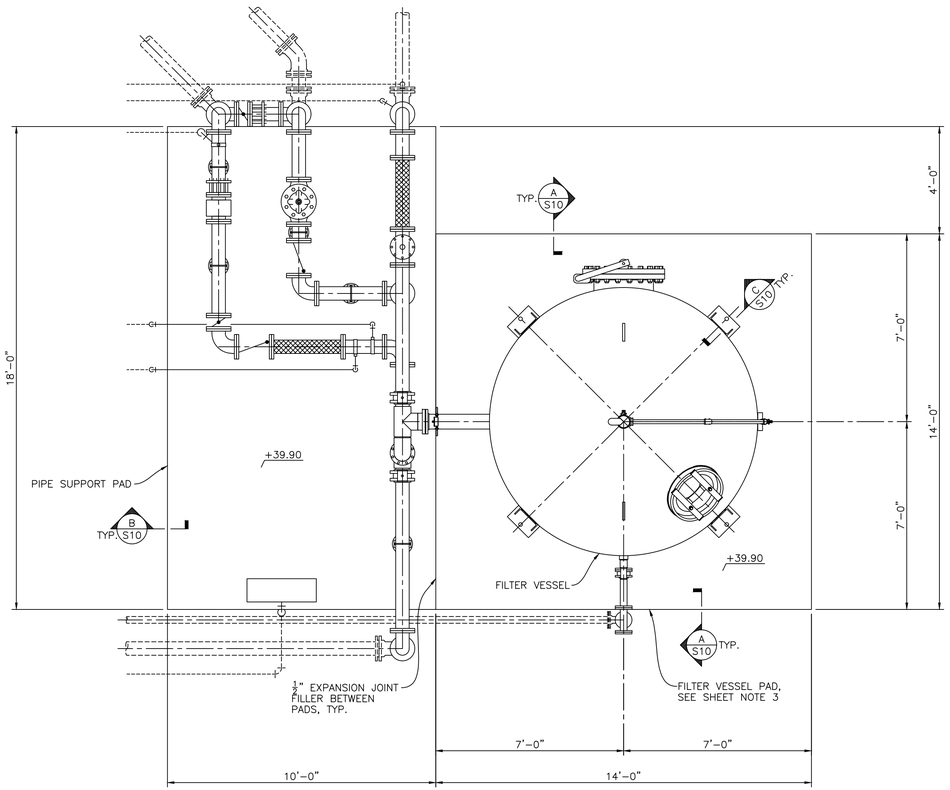

FILTER VESSEL FOUNDATION PLAN
3/8" = 1'-0"

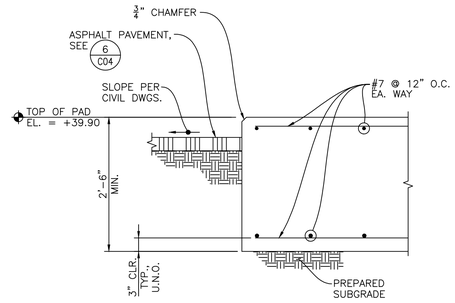

FILTER VESSEL PAD
SECTION A S10
3/4" = 1'-0"

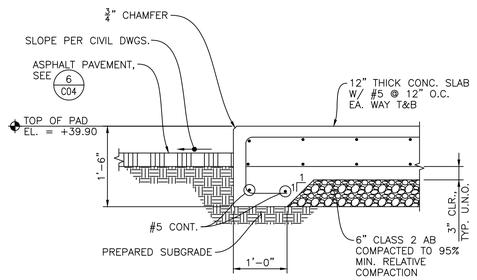

PIPE SUPPORT PAD
SECTION B S10
3/4" = 1'-0"

SHEET NOTES:

1. SEE SHEET S01 FOR GENERAL NOTES.
2. +39.90 DENOTES TOP OF CONCRETE PAD ELEVATION.
3. FILTER VESSEL PAD SHALL NOT BE CONSTRUCTED UNTIL FILTER VESSEL SUBMITTAL AND ANCHORAGE DESIGN HAS BEEN REVIEWED & APPROVED.

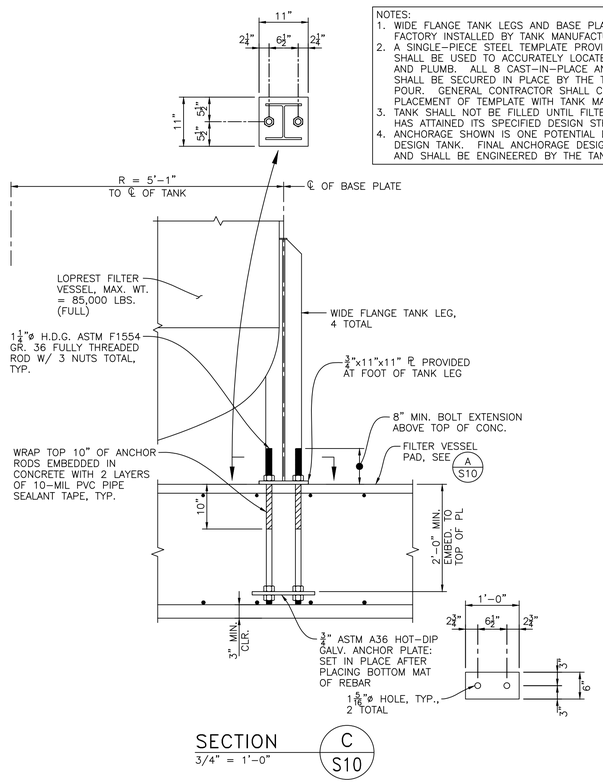

NOTES:
1. WIDE FLANGE TANK LEGS AND BASE PLATES ARE AS PROVIDED AND FACTORY INSTALLED BY TANK MANUFACTURER.
2. A SINGLE-PIECE STEEL TEMPLATE PROVIDED BY TANK MANUFACTURER SHALL BE USED TO ACCURATELY LOCATE ALL 8 ANCHOR RODS, TRUE AND PLUMB. ALL 8 CAST-IN-PLACE ANCHORS FOR FILTER VESSEL SHALL BE SECURED IN PLACE BY THE TEMPLATE DURING CONCRETE POUR. GENERAL CONTRACTOR SHALL COORDINATE CORRECT PLACEMENT OF TEMPLATE WITH TANK MANUFACTURER PRIOR TO POUR.
3. TANK SHALL NOT BE FILLED UNTIL FILTER VESSEL PAD CONCRETE HAS ATTAINED ITS SPECIFIED DESIGN STRENGTH.
4. ANCHORAGE SHOWN IS ONE POTENTIAL DESIGN FOR THE BASIS-OF-DESIGN TANK. FINAL ANCHORAGE DESIGN IS A DEFERRED SUBMITTAL AND SHALL BE ENGINEERED BY THE TANK MANUFACTURER.

SECTION C S10
3/4" = 1'-0"

PASE
408.957.9220 www.pase.com

Designer Stamp:
REGISTERED PROFESSIONAL ENGINEER TIMOTHY E. ELLIOTT C 63260 S 4946 STRUCTURAL STATE OF CALIFORNIA
02/06/25

Record Drawings

Designer: _____ Date: _____
Public Works Inspector: _____ Date: _____
Utility/Facility Dept. Head: _____ Date: _____
Project Engineer: _____ Date: _____
Public Improvements Initially Accepted by the City Council on: _____ Res. No. _____

Drawn By: REM Date: 02/06/25
Checked By: TEE Date: 02/06/25
Designed By: TEE Date: 02/06/25

Revisions

Num.	Description	Engr. Aprv.	Date
1			

CITY OF MILPITAS
ENGINEERING DIVISION

McCANDLESS WELL FACILITY
PROJECT NO. 7076

FILTER VESSEL FOUNDATION PLAN, SECTIONS & DETAILS

RECOMMENDED FOR BIDDING BY: Lyhak Eam DATE: 2/7/2025
LYHAK EAM, P.E., Public Works Division Manager – Engineering

DWG NO. S10
PROJECT NO. 7076
Rec. Dwg No.
SCALE: AS SHOWN
SHEET 42 OF 70

Y:\Projects\23-DWGS\23-336 McCandless Well Facility\23-336S10.dwg 2/5/2025 7:29 PM telliott

MISCELLANEOUS ELECTRICAL & INSTRUMENTATION ABBREVIATIONS

&	AND	HOR	HAND-OFF-REMOTE	PRESS	PRESSURE
@	AT	HP	HORSEPOWER	PRI	PRIMARY
A	AMBER, AMPERES	HPS	HIGH PRESSURE SODIUM	PROVIDE	FURNISH, INSTALL & CONNECT
AC	ALTERNATING CURRENT	HS	HAND SWITCH	PRR	POWER RELAY
AF	AMP FRAME	HTR	HEATER	PS	PRESSURE SWITCH, POWER SUPPLY
AFF	ABOVE FINISHED FLOOR	HZ	HERTZ (CYCLES PER SECOND)	PT	POTENTIAL TRANSFORMER
AI	ANALOG INPUT	HZD	HAZARDOUS AREA, EXPLOSION PROOF	PTT	PUSH TO TEST
AIC	AMP INTERRUPTING CAPACITY SYMMETRICAL	I	INTERLOCK	PV	PROCESS VARIABLE
AL	RIGID ALUMINUM CONDUIT	I/O	INPUT/OUTPUT	PVC	POLY VINYL CHLORIDE
ALT	ALTERNATOR	ICR	INSTRUMENTATION CONTROL RELAY	PWR	POWER
AM	AMMETER	INST	INSTANTANEOUS	R	RED
ARMS	ARC FLASH REDUCTION MAINTENANCE SYS	ISC	SHORT CKT INTERRUPTING CURRENT (SYMM)	RCT	REPEAT CYCLE TIMER
AO	ANALOG OUTPUT	ISR	INTRINSICALLY SAFE RELAY	REF	REFERENCE
AT	AMP TRIP	J	JUNCTION BOX	RIO	REMOTE I/O
ATS	AUTOMATIC TRANSFER SWITCH	K	KILO, PREFIX	RTD	RESISTANCE TEMPERATURE DETECTOR
AWG	AMERICAN WIRE GUAGE	KAIC	KILO-AMPERE INTERRUPTING CAPACITY	RTM	RUN TIME METER
B	BLUE	L	LINE	RTU	REMOTE TELEMETRY UNIT
BC	BARE COPPER	LA	LIGHTNING ARRESTOR	RVNR	REDUCED VOLTAGE NON-REVERSING
BFC	BELOW FINISHED CEILING	LC	LIGHTING CONTACTOR	(R)	REWIRE, RELOCATE, REVISE, REUSE, REPLACE
BOD	BIOCHEMICAL OXYGEN DEMAND	LCD	LIQUID CRYSTAL DISPLAY	SC	SHORTING CONTACTOR
BLK	BLANK	LED	LIGHT EMITTING DIODE	SCH	SCHEDULE
BKR	BREAKER	LEL	LOWER EXPLOSIVE LIMIT	SEC	SECONDARY
C	CONDUIT	LGT	LIGHT	SECS	SECONDS
CAP	CAPACITOR	LO	LOW	SEL	SELECTOR
CB	CIRCUIT BREAKER	LOR	LOCAL-OFF-REMOTE	SFA	SERVICE FACTOR AMPS
CBL	CABLE	LOS	LOCK-OUT STOP SWITCH	SP	SETPOINT
CH	CHANNEL	LP	LIGHTING PANELBOARD	SPD	SURGE PROTECTIVE DEVICE
CKT	CIRCUIT	LPU	LINE PROTECTION UNIT	SPEC	SPECIFICATION
COAX	COAXIAL CABLE	LS	LEVEL SWITCH	SS	STAINLESS STEEL
COMM	COMMUNICATION PORT	LSI	LONG, SHORT, INSTANTANOUS	SSS	SOLID STATE SOFT STARTER
CP	CONTROL PANEL	M	MOTOR CONTRACTOR	STT	START
CPT	CONTROL POWER TRANSFORMER	MAX	MAXIMUM	STP	STOP
CR	CONTROL RELAY	MCC	MOTOR CONTROL CENTER	SV	SOLENOID VALVE
CT	CURRENT TRANSFORMER	MCM	THOUSAND CIRCULAR MILS	SW	SWITCH
CTQ	CONSTANT TORQUE	MCP	MOTOR CIRCUIT PROTECTOR	SWBD	SWITCHBOARD
CU	COPPER, CONDENSING UNIT	MH	MANHOLE	SWGR	SWITCHGEAR
DC	DIRECT CURRENT	MHD	METAL HALIDE	SYMM	SYMMETRICAL
DET	DETAIL	MIN	MINIMUM	T	TRIP
DI	DIGITAL INPUT	MINS	MINUTES	TB	TERMINAL BLOCK
DIA	DIAGRAM	MISC	MISCELLANEOUS	TC	TIME CLOCK
DISC	DISCONNECT	MNFR	MANUFACTURER	TDOD	TIME DELAY ON DE-ENERGIZATION
DIV	DIVISION	MOV	MOTOR OPERATED VALVE	TDOE	TIME DELAY ON ENERGIZATION
DO	DIGITAL OUTPUT	MPS	MOTOR PROTECTION SYSTEM	TEL	TELEMETRY
DPDT	DOUBLE POLE DOUBLE THROW	MS	MOISTURE SENSOR/SWITCH	TELCO	TELEPHONE COMPANY
DWG	DRAWING	MTR	MOTOR	TEMP	TEMPERATURE
ELEV	ELEVATION	MTS	MANUAL TRANSFER SWITCH	TM	THERMAL MAGNETIC
EMT	ELECTRICAL METALLIC TUBING	MV	MEDIUM VOLTAGE	TOC	TOTAL ORGANIC CARBON
ETM	ELAPSED TIME METER	N	NEUTRAL	TR	TIME DELAY RELAY
(E)	EXISTING	NC	NORMALLY CLOSED	TRIAD	TWISTED & SHIELDED 3 CONDUCTOR
F	FRAME	NEC	NATIONAL ELECTRICAL CODE	TS	TEMPERATURE SWITCH
FC	FAIL CLOSED, FAN COIL	NEMA	NATIONAL ELECTRICAL MANUFACTURERS ASSOCIATION	TSPR	TWISTED & SHIELDED PAIR
FCS	FIELD CONTROL STATION	NIC	NOT IN CONTRACT	TYP	TYPICAL
FLA	FULL LOAD AMPS	NO	NORMALLY OPEN	UG	UNDERGROUND
FO	FAIL OPEN	NP	NAMEPLATE	UL	UNDERWRITERS LABORATORIES
FLEX	FLEXIBLE, METAL LIQUID TIGHT CONDUIT	NTS	NOT TO SCALE	UON	UNLESS OTHERWISE NOTED
FROA	FORWARD-REVERSE-OFF-AUTO	(N)	NEW	UPS	UNINTERRUPTIBLE POWER SUPPLIES
FS	FLOW SWITCH OR FULL SPEED	OC	ON CENTER	V	VOLTAGE
FV, FVNR	FULL VOLTAGE NON-REVERSING	OI	OPERATOR INTERFACE	VA	VOLT AMPS
FVR	FULL VOLTAGE REVERSING	OL	OVERLOAD	VAR	VOLT AMP REACTIVE
FWD	FORWARD	ORP	OXIDATION REDUCTION POTENTIAL	VFD	VARIABLE FREQUENCY DRIVE
(F)	FUTURE	P	PHASE, POLE	VLV	VALVE
G	GREEN	PB	PULL BOX	VM	VOLTMETER
GALV	GALVANIZED	PBI	PULL BOX INSTRUMENT	VTQ	VARIABLE TORQUE
GEN	GENERATOR	PBP	PULL BOX POWER	W	WHITE, WATTS
GFI	GROUND FAULT CIRCUIT INTERRUPTER	PE	PHOTOCELL	WHM	WATT-HOUR METER
GND	GROUND	PF	POWER FAIL	WM	WATTMETER
GRS	GALVANIZED RIGID STEEL CONDUIT	PFR	POWER (PHASE) FAIL RELAY	WP	WATERPROOF, WEATHER PROOF
GRS-PVC	PVC COATED GRS CONDUIT	PH	HYDROGEN ION CONCENTRATION	WS	TORQUE SWITCH, WATER SURFACE
HC	PUSHBUTTON	PLC	PROGRAMMABLE LOGIC CONTROLLER	XFMR	TRANSFORMER
HI	HIGH	PM	POWER MONITOR	XS	MISCELLANEOUS SWITCH
HID	HIGH INTENSITY DISCHARGE	PMP	PUMP	Y	YELLOW
HMI	HUMAN MACHINE INTERFACE	PNL	PANEL	Z	IMPEDANCE
HOA	HAND-OFF-AUTO	PR	PAIR, TWISTED & SHIELDED CABLE	ZS	LIMIT SWITCH

SWITCHES – PROCESS

SYMBOL	DESCRIPTION
FS	FLOW SWITCH – CLOSES UPON INCREASING FLOW
FS	FLOW SWITCH – OPENS UPON INCREASING FLOW
LS	LEVEL SWITCH – CLOSES UPON INCREASING LEVEL
LS	LEVEL SWITCH – OPENS UPON INCREASING LEVEL
PS	PRESSURE SWITCH – CLOSES UPON INCREASING PRESSURE (INCREASING VACUUM)
PS	PRESSURE SWITCH – OPENS UPON INCREASING PRESSURE (INCREASING VACUUM)
TS	TEMPERATURE SWITCH – CLOSES UPON INCREASING TEMPERATURE
TS	TEMPERATURE SWITCH – OPENS UPON INCREASING TEMPERATURE
ZS	LIMIT SWITCH – CLOSES AT SET LIMIT
ZS	LIMIT SWITCH – OPENS AT SET LIMIT
ZS	PROXIMITY SWITCH – CLOSES UPON DECREASING DISTANCE
ZS	PROXIMITY SWITCH – OPENS UPON DECREASING DISTANCE
WS	TORQUE SWITCH – CLOSES UPON INCREASING TORQUE
WS	TORQUE SWITCH – OPENS UPON INCREASING TORQUE

DEVICES – RELAY

SYMBOL	DESCRIPTION
CR 1 / 28, 111	CONTROL RELAY CR1 WITH NORMALLY OPEN CONTACT ON LINE 28 & NORMALLY CLOSED CONTACT ON LINE 111
TR 1	TIME DELAY RELAY TR2 – ADJUSTABLE TIME DELAY RANGE & SETTING AS SHOWN
TDOE / TDOD	TIME DELAY ON ENERGIZATION / TIME DELAY ON DE-ENERGIZATION
M1	CONTACTOR OR STARTER M1
SV	SOLENOID
CR1 (105)	NORMALLY OPEN, RELAY CONTACT – ACTUATED BY RELAY CR1 COIL LOCATED ON LINE 105
CR1	NORMALLY CLOSED, RELAY CONTACT – ACTUATED BY RELAY CR1
TR2	NORMALLY OPEN, TIME DELAY RELAY CONTACT – CONTACT CLOSES AFTER TR2 IS ENERGIZED
TR2	NORMALLY CLOSED, TIME DELAY RELAY CONTACT – CONTACT OPENS AFTER TR2 IS ENERGIZED
TR2	NORMALLY OPEN, TIME DELAY RELAY CONTACT – CONTACT OPENS AFTER TR2 IS DE-ENERGIZED
TR2	NORMALLY CLOSED, TIME DELAY RELAY CONTACT – CONTACT CLOSES AFTER TR2 IS DE-ENERGIZED
TR2	CONTACT OPENS AND CLOSES IN A TIMED REPEAT CYCLE

COMPONENTS

SYMBOL	DESCRIPTION
RES	RESISTOR
	POTENTIOMETER
	CAPACITOR, FIXED
	CAPACITOR, ADJUSTABLE
	DIODE
	DIODE, ZENER
	VARISTOR TRANSIENT VOLTAGE SUPPRESSOR
	VOLTAGE SURGE SUPPRESSOR, AC
	RESISTANCE TEMPERATURE DETECTOR (RTD)
	THERMOCOUPLE (T/C)

DEVICES – MISCELLANEOUS

SYMBOL	DESCRIPTION
	AUDIBLE ALARM
	BATTERY
HTR	HEATER
	3 PHASE HEATER
G	GENERATOR
# HP	3 PHASE MOTOR # = MOTOR HP
# HP	SINGLE PHASE MOTOR
	TRANSFORMER
	LINE REACTOR

WIRING – CONNECTIONS

SYMBOL	DESCRIPTION
	PANEL OR EQUIPMENT WIRING
	FIELD WIRING
	CONDUCTORS – NOT CONNECTED
	CONDUCTORS – CONNECTED
	GROUND
	CHASSIS OR FRAME GROUND
	PLUG AND RECEPTACLE
	INCOMING LINE
	TERMINAL BLOCKS
	TERMINALS
SHIELD / CONDUCTOR	SHIELDED CABLE

PLAN – SYMBOLS

SYMBOL	DESCRIPTION
	CONDUIT, EXPOSED
	CONDUIT, IN SLAB OR BELOW GRADE
	CONDUIT STUBBED OUT & CAPPED
	CONDUIT BENDS TOWARD OBSERVER
	CONDUIT BENDS AWAY FROM OBSERVER
	CONDUIT ENDS
	CONDUIT CHANGE IN ELEVATION
G	BARE COPPER GROUND WIRE
	GROUND CONNECTION BOLTED TYPE
	GROUND CONNECTION EXOTHERMIC WELD TYPE
	PULL BOX
	DISCONNECT SWITCH
	FIELD CONTROL STATION WITH JUNCTION BOX
#A	FIELD CONTROL STATION WITH #AMP DISCONNECT SWITCH
	SPECIAL RECEPTACLE
J	JUNCTION BOX
T	THERMOSTAT
# A a	LIGHTING, FANS, HEATERS # – CIRCUIT BREAKER NUMBER A – FIXTURE SCHEDULE REF. a – CONTROL SWITCH REFERENCE
#	DUPLEX RECEPTACLE # – CIRCUIT BREAKER NUMBER
# $ 2 a	TOGGLE SWITCH # – CIRCUIT BREAKER NUMBER SUBSCRIPT – CIRCUIT CONTROLLED SUPERSCRIPT – BLANK = 1 POLE 2 = 2 POLE 3 = 3 WAY
#	CONDUIT #
##	EQUIPMENT NUMBER

SWITCHES – OPERATOR

SYMBOL	DESCRIPTION
SW	TOGGLE OR DISCONNECT SWITCH
PB	PUSHBUTTON – NORMALLY OPEN, MOMENTARY ACTION
PB	PUSHBUTTON – NORMALLY CLOSED, MOMENTARY ACTION
PB	PUSHBUTTON, MECHANICALLY INTERLOCKED, DOUBLE CIRCUIT – NORMALLY CLOSED AND NORMALLY OPEN, MAINTAINED ACTION
H O A	SELECTOR SWITCH, 3 POSITION – CONTACT STATUS SHOWN EXISTS AT POSITION OF H–HAND, O–OFF, OR A–AUTO
2–1 1–2	SELECTOR SWITCH, 2 POSITION – CONTACT STATUS SHOWN EXISTS AT POSITION AS SHOWN

DEVICES – FRONT PANEL

SYMBOL	DESCRIPTION
X	INDICATING LIGHT, LETTER "X" INDICATES COLOR: R=RED G=GREEN, A=AMBER, W=WHITE Y=YELLOW, B=BLUE
PTT X	INDICATING LIGHT, PUSH TO TEST
AM	AMP METER
VM	VOLT METER
ETM	ELAPSED TIME METER
RTM	RUN TIME METER
XS	MULTI–POSITION SWITCH WHERE LETTER "X" IS FUNCTION: A=AMP, V=VOLT

DEVICES – PROTECTIVE

SYMBOL	DESCRIPTION
	DISCONNECT, 3 POLE
	CIRCUIT BREAKER, 3 POLE THERMAL MAGNETIC (TM) OR MOTOR CIRCUIT PROTECT (MCP)
OL	THERMAL OVERLOAD CONTACT
	THERMAL OVERLOAD ELEMENT
	FUSE WITH BLOWN FUSE INDICATING LIGHT
	FUSE
52	MEDIUM VOLTAGE DRAWOUT CIRCUIT BREAKER
	LOW VOLTAGE DRAWOUT CIRCUIT BREAKER

T.E.E.m.
(916) 457-8144

FILE: 2312G
© NOVEMBER 2024
ATEEM ENGINEERING
ALL RIGHTS RESERVED

WEST YOST
Water. Engineered.
6800 Koll Center Parkway
Suite 150
Pleasanton, CA 94566
(925) 426-2580
FAX (530) 756-5991

Designer Stamp:

REGISTERED PROFESSIONAL ENGINEER – W. KAMMERER – NO. 15698 – Exp.6-30-2026 – ELECTRICAL – STATE OF CALIFORNIA

2/5/2025

Record Drawings

Designer: _____ Date: _____

Public Works Inspector: _____ Date: _____

Utility/Facility Dept. Head: _____ Date: _____

Project Engineer: _____ Date: _____

Public Improvements Initially Accepted by the City Council on: _____ Res. No. _____

Drawn By: ZK Date: 2/5/2025

Checked By: XL Date: 2/5/2025

Designed By: SK Date: 2/5/2025

Revisions

Num.	Description	Engr. Aprv.	Date

CITY OF MILPITAS
ENGINEERING DIVISION

McCANDLESS WELL FACILITY
PROJECT NO. 7076

ELECTRICAL SYMBOLS & ABBREVIATIONS

RECOMMENDED FOR BIDDING BY: *Lyhak Eam* DATE: 2/7/2025
LYHAK EAM, P.E., Public Works Division Manager – Engineering

DWG NO. E01
PROJECT NO. 7076
Rec. Dwg No.
SCALE:
SHEET 43 OF 70

\\eteem_fs\ATEEM_Files\ACADDWG\2023\2312g\2312gE001.dwg

MSBB LOAD CALCULATIONS		UTILITY SERVICE				
HP DESCRIPTION	LOAD AMPS	QTY LOAD	LOAD VA	RUN AMPS	QTY RUN	RUN VA
60 WELL PUMP	77.0	1	64,017	77.0	1	64,017
5 WASH PUMP	7.6	1	6,319	7.6	1	6,319
2 AIR COMPRESSOR	3.4	1	2,827	3.4	1	2,827
PANEL LP	33.7		28,045	33.7		28,045
SUBTOTAL	121.7		101,207	121.7		101,207
DIVERSITY FACTOR			100 %			
60 HP Largest motor @ 25% additional				77.0	0.25	16,004
TOTAL						117,211

/ 480 V, 3 Phase Service Amps = 141.0 Amps
1.25 Multiplier
Service Size = 176.2 Amps
Main Breaker Size = 300.0 Amps
% Main Breaker Load = 58.7%

DWG REF: E2 | MOUNTING: FLUSH | VOLTS: 120 / 208 | BUS AMPS: 225A | ENTRY: BOTTOM
NAMEPLATE: LP | PHASE: 3 | MAIN BKR: MLO | NEMA: 1G
LOCATION: MSBB | WIRE: 4 | KAIC RATING: 10 | SPD: YES

BKR NO.	LOAD DESCRIPTION	LOAD VA	LINE AMPS	BKR AMP/ POLE	BKR NO.	PHASE	BKR NO.	BKR AMP/ POLE	LINE AMPS	LOAD VA	LOAD DESCRIPTION	BKR NO.
1	LIGHTS - ELETRICAL ROOM	200	2	20/1	1	A	2	20/1	6	720	RECEPT - ELECTRICAL ROOM	2
3	LIGHTS - CHEMICAL ROOM	512	4	20/1	3	B	4	20/1	8	900	RECEPT - CHEMICAL ROOM	4
5	LIGHTS - OUTSIDE BLDG	260	2	20/1	5	C	6	20/1	6	720	RECEPT - OUTSIDE BLDG	6
7	CHEM RM EXHAUST FAN	500	4	20/1	7	A	8	20/1	0	0	SPARE	8
9	AREA LIGHT	244	2	20/1	9	B	10	20/1	2	180	RECEPT - MCC	10
11	RECEPT - POLE	360	3	20/1	11	C	12	20/1(L)	16	1,920	CHEM XFER PUMP P410	12
13	CP UPS	1,000	8	20/1	13	A	14	20/1(L)	10	1,200	CHEM FEED PUMPS P411/2	14
15	CP CONVENIENCE	300	3	20/1	15	B	16	20/1(L)	16	1,920	CHEM XFER PUMP P420	16
17	FILTER FCP	1,000	8	20/1	17	C	18	20/1(L)	10	1,200	CHEM FEED PUMPS P421/2	18
19	FILTER SV PANEL PNL201	800	7	20/1(L)	19	A	20	20/1(L)	16	1,920	CHEM XFER PUMP P430	20
21	SPARE	0	0	20/1	21	B	22	20/1(L)	10	1,200	CHEM FEED PUMPS P431/2	22
23	LIT351	100	1	20/1	23	C	24	20/1	4	500	AIT281~3	24
25	GATE OPENER-WEST	1,000	8	20/1	25	A	26	20/1	0	0	SPARE	26
27	GATE OPENER-NORTH	1,000	8	20/1	27	B	28	15/2	0	0	SPARE	28
29	SPARE	0	0	20/1	29	C	30		0	0		30
31	NETWORK PANEL	1,000	8	20/1	31	A	32	30/2	20	2,400	HVAC-1	32
33	SPARE	0	0	20/1	33	B	34	(H)(L)	20	2,400		34
35	SPARE	0	0	20/1	35	C	36	30/2	20	2,400	HVAC-2	36
37	SPARE	0	0	20/1	37	A	38	(H)(L)	20	2,400		38
39	SPARE	0	0	20/1	39	B	40	30/2	20	2,400	HVAC-3	40
41	SPARE	0	0	25/1	41	C	42	(H)(L)	20	2,400		42

PHASE	A	B	C
LEFT SIDE AMPS	38	17	14
LEFT SIDE KVA	4.50	2.06	1.72
TOTAL KVA			35.06
TOTAL AMPS @ 208V, 3P			97.3
DIVERSITY FACTOR			0.80
LOAD KVA			28.04

NEUTRAL

GROUND

350	B	C	PHASE
72	75	76	RIGHT SIDE AMPS
8.64	9.00	9.14	RIGHT SIDE KVA
4.50	2.06	1.72	LEFT SIDE KVA
13.14	11.06	10.86	TOTAL PHASE KVA
110	92	91	TOTAL PHASE AMPS
112	95	93	% OF AVERAGE

NOTES: 1. MEANS OF WIRE COLOR CODING SHALL BE POSTED ON PANELBOARD PER CEC 210.5
2. (G) INDICATES GFI BREAKER REQUIRED WITH 30 MA SENSITIVITY.
3. (H) INDICATES HACR RATED BREAKER.
4. (L) PROVIDE PADLOCKING PROVISION IN ORDER TO LOCK BREAKER IN THE OFF POSITION.

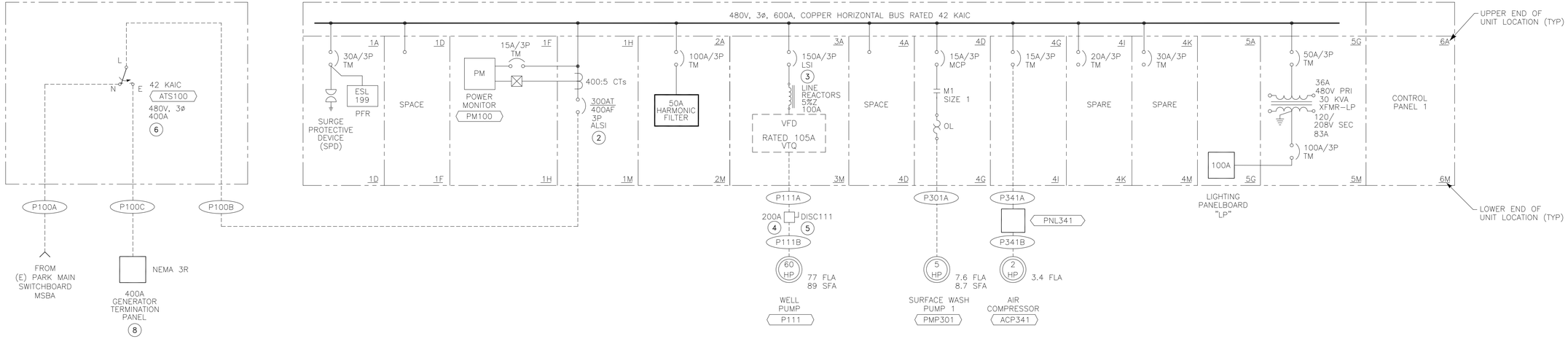

AUTOMATIC TRANSFER SWITCH (ATS) & MAIN SWITCHBOARD B (MSBB) ONE LINE DIAGRAM (1) (7)

NOTES:
(1) ALL LUGS SHALL BE COPPER. SIZE FOR WIRES LISTED IN "CONDUIT & WIRE ROUTING SCHEDULE".
(2) BREAKER TO HAVE ARCFLASH REDUCTION, LONG, SHORT, AND INSTANTANEOUS (ALSI) ADJUSTABLE TRIP UNITS.
(3) BREAKER TO HAVE LONG, SHORT, AND INSTANTANEOUS (LSI) ADJUSTABLE TRIP UNITS.
(4) NEMA 4X SS DISCONNECT SWITCH WITH MINIMUM AMP RATING SHOWN.
(5) INSTALL VFD TERMINATOR UNIT AT DISCONNECT SWITCH.
(6) ATS SHALL BE OPEN TRANSITION TYPE.
(7) SEE DWG E20 FOR CONDUIT & WIRE ROUTING SCHEDULE.
(8) GENERATOR TERMINATION PANEL PER DWG E12, DETAIL "B".

T.E.E.m.
(916) 457-8144

FILE: 2312G
© NOVEMBER 2024
ATEEM ENGINEERING
ALL RIGHTS RESERVED

WEST YOST
Water. Engineered.
6800 Koll Center Parkway
Suite 150
Pleasanton, CA 94566
(925) 426-2580
FAX (530) 756-5991

Designer Stamp:
REGISTERED PROFESSIONAL ENGINEER — N. KAMALESWAR — NO. 15698 — Exp.6-30-2026 — ELECTRICAL — STATE OF CALIFORNIA
2/5/2025

Record Drawings

Designer: _____ Date: _____
Public Works Inspector: _____ Date: _____
Utility/Facility Dept. Head: _____ Date: _____
Project Engineer: _____ Date: _____
Public Improvements Initially Accepted by the City Council on: _____ Res. No. _____

Drawn By: ZK Date: 2/5/2025
Checked By: XL Date: 2/5/2025
Designed By: SK Date: 2/5/2025

Revisions

Num.	Description	Engr. Aprv.	Date
1			

CITY OF MILPITAS
ENGINEERING DIVISION

McCANDLESS WELL FACILITY
PROJECT NO. 7076

ATS & MSBB ONE LINE DIAGRAM

RECOMMENDED FOR BIDDING BY: Lyhak Eam DATE: 2/7/2025
LYHAK EAM, P.E., Public Works Division Manager – Engineering

DWG NO. E02
PROJECT NO. 7076
Rec. Dwg No.
SCALE:
SHEET 44 OF 70

Z:\ACADDWG\2023\2312g\2312gE002.dwg

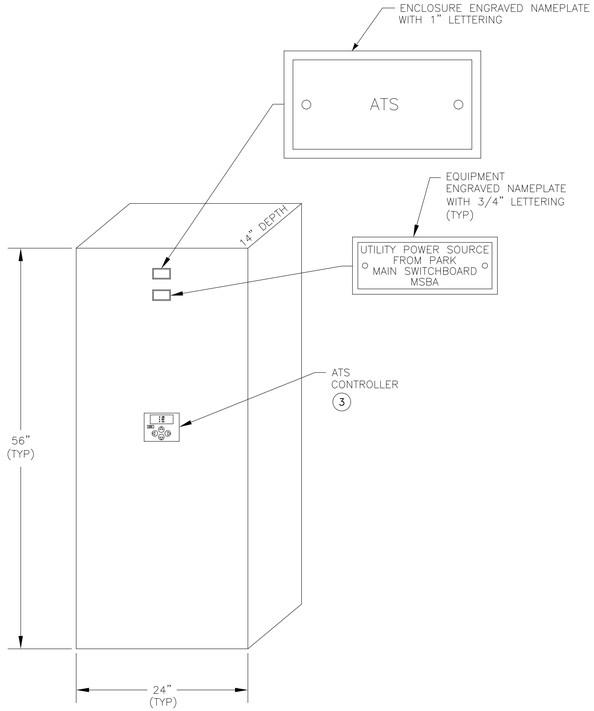

ATS ELEVATION

NOT TO SCALE

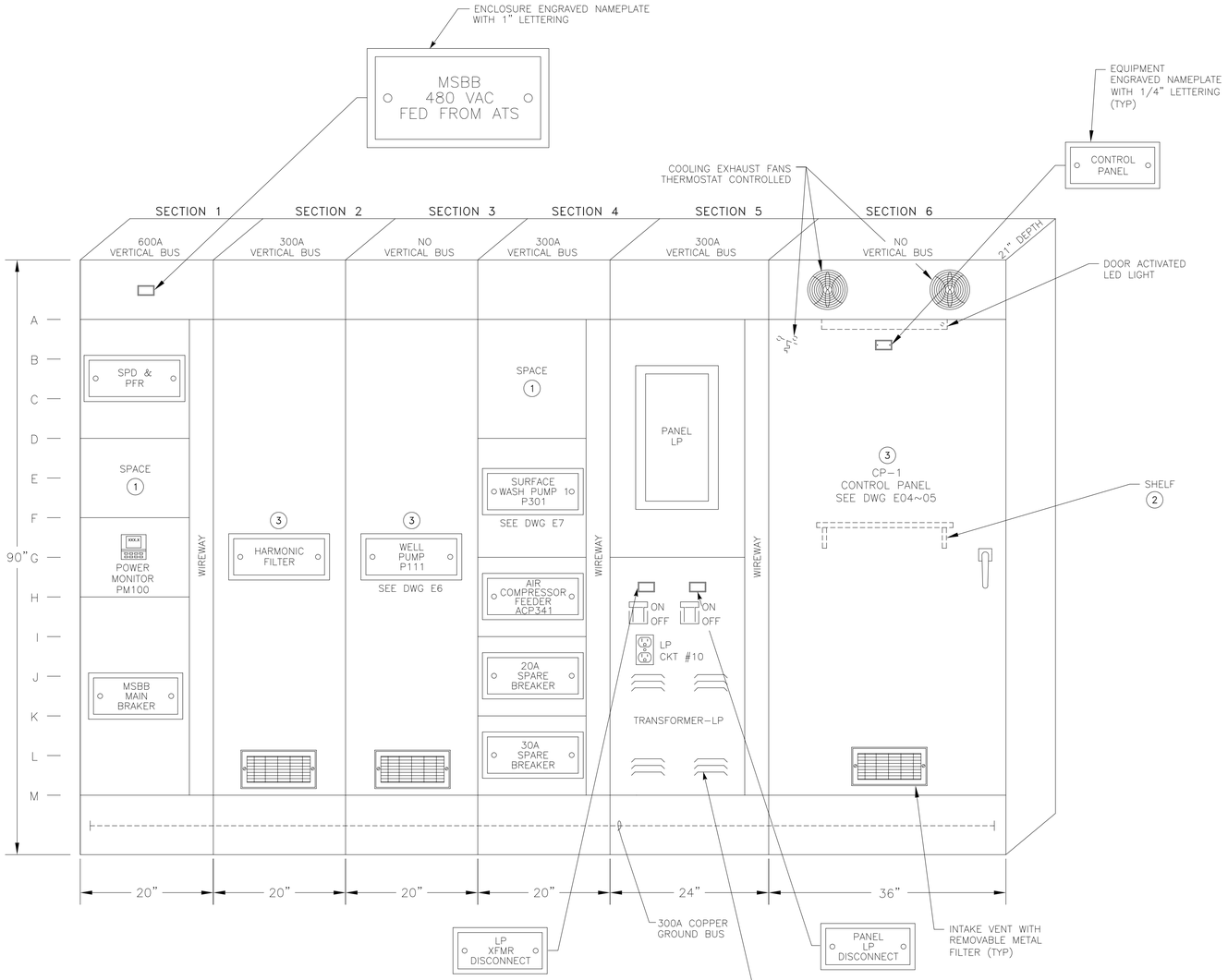

MSBB ELEVATION 4

NOT TO SCALE

NOTES:

1. EACH SPACE LOCATION TO HAVE DRAW OUT BUCKET WITH BLANK DOOR.
2. FOLD DOWN SHELF 18" X 18" MOUNTED INSIDE DOOR, HOFFMAN AASHLF1818 OR APPROVED EQUAL.
3. TOP OF PILOT DEVICES – OPERATOR INTERFACE TO BE NO MORE THAN 66" ABOVE FINISHED FLOOR.
4. MSBB SHALL BE LABELED WITH PERMANENT ENGRAVED NAMEPLATES NOTING THE SOURCE OF SUPPLY AND WHAT EACH CIRCUIT BREAKER IS FEEDING.

T.E.E.m.
(916) 457-8144
FILE: 2312G

© NOVEMBER 2024
ATEEM ENGINEERING
ALL RIGHTS RESERVED

WEST YOST
Water. Engineered.
6800 Koll Center Parkway
Suite 150
Pleasanton, CA 94566
(925) 426-2580
FAX (530) 756-5991

Designer Stamp:

REGISTERED PROFESSIONAL ENGINEER
JOHN M. KIMMEY
NO. 15698
Exp.6-30-2026
ELECTRICAL
STATE OF CALIFORNIA

2/5/2025

Record Drawings

Designer: _____ Date: _____
Public Works Inspector: _____ Date: _____
Utility/Facility Dept. Head: _____ Date: _____
Project Engineer: _____ Date: _____
Public Improvements Initially Accepted by the City Council on: _____ Res. No. _____

Drawn By: ZK Date: 2/5/2025
Checked By: XL Date: 2/5/2025
Designed By: SK Date: 2/5/2025

Revisions

Num.	Description	Engr. Aprv.	Date
△			

CITY OF MILPITAS
ENGINEERING DIVISION

McCANDLESS WELL FACILITY
PROJECT NO. 7076

ATS & MSBB ELEVATION

RECOMMENDED FOR BIDDING BY: Lyhak Eam DATE: 2/7/2025
LYHAK EAM, P.E., Public Works Division Manager – Engineering

DWG NO. E03
PROJECT NO. 7076
Rec. Dwg No.
SCALE:
SHEET 45 OF 70

Z:\ACADDWG\2023\2312g\2312gE003.dwg

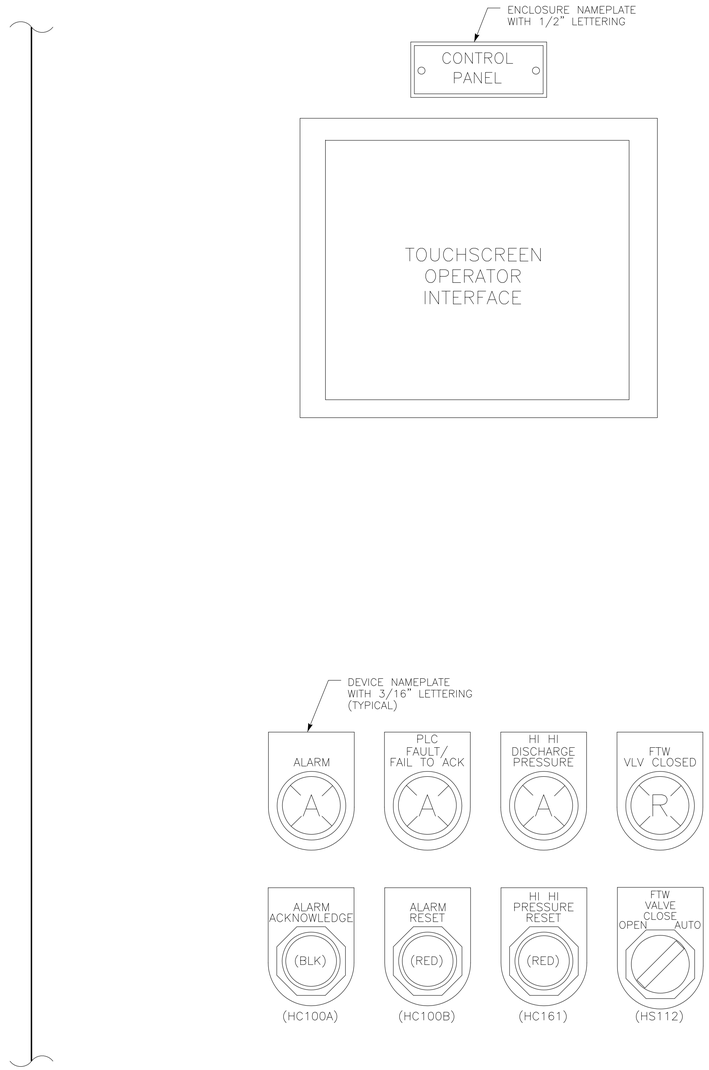

CONTROL PANEL DOOR ELEVATION

NOT TO SCALE

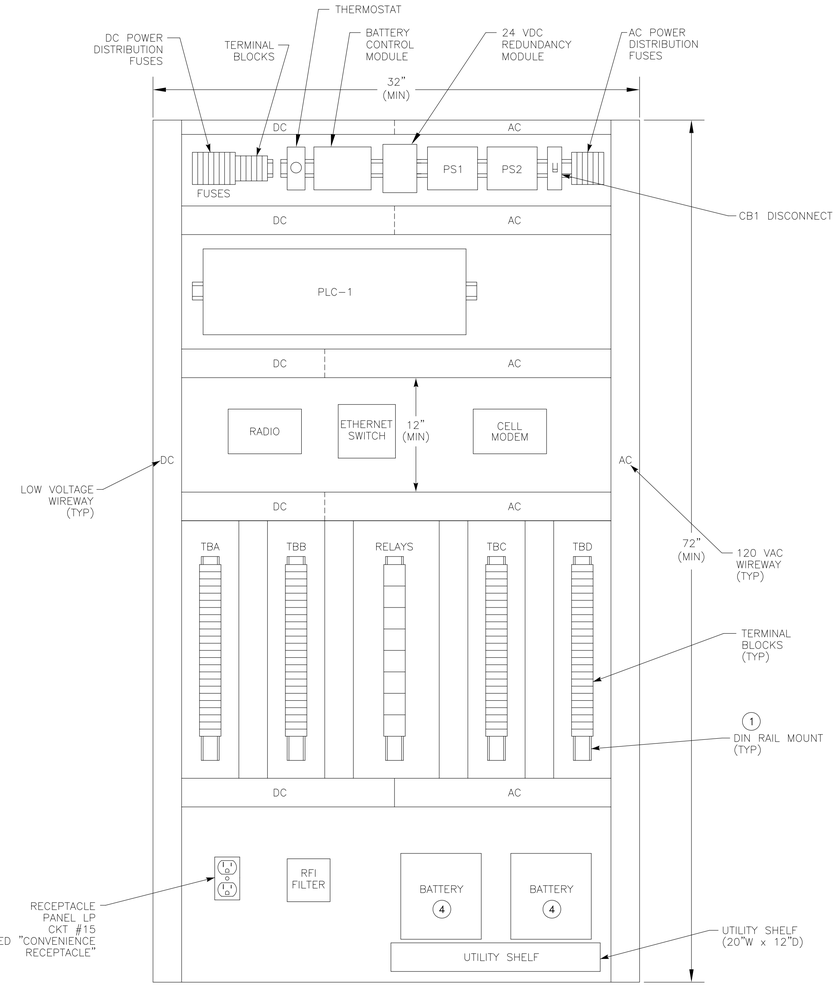

CP BACKPAN LAYOUT 2 3

NOT TO SCALE

NOTES:

1. PROVIDE ADDITIONAL DIN RAIL TO ADD A MINIMUM OF EIGHT TERMINAL BLOCKS TO EACH TERMINAL STRIP.
2. PROVIDE SIDEPANS ON BOTH SIDES OF ENCLOSURE FOR ADDITIONAL MOUNTING SPACE.
3. CONTROL PANEL SHALL BE CONSTRUCTED BY AN U.L. APPROVED PANEL SHOP AND BEAR A U.L. LABEL.
4. SECURE BATTERIES TO SHELF WITH SS STRAPS.

Z:\ACADDWG\2023\2312g\2312gE004.dwg

T.E.E.m.
(916) 457-8144
FILE: 2312G

© NOVEMBER 2024
ATEEM ENGINEERING
ALL RIGHTS RESERVED

WEST YOST
Water. Engineered.
6800 Koll Center Parkway
Suite 150
Pleasanton, CA 94566
(925) 426-2580
FAX (530) 756-5991

Designer Stamp:

REGISTERED PROFESSIONAL ENGINEER
JOHN M. KIMMINGS
NO. 15698
Exp.6-30-2026
ELECTRICAL
STATE OF CALIFORNIA

2/5/2025

Record Drawings

Designer: _____ Date: _____
Public Works Inspector: _____ Date: _____
Utility/Facility Dept. Head: _____ Date: _____
Project Engineer: _____ Date: _____
Public Improvements Initially Accepted by the City Council on: _____ Res. No. _____

Drawn By: ZK Date: 2/5/2025
Checked By: XL Date: 2/5/2025
Designed By: SK Date: 2/5/2025

Revisions

Num.	Description	Engr. Aprv.	Date
△			

CITY OF MILPITAS
ENGINEERING DIVISION

McCANDLESS WELL FACILITY
PROJECT NO. 7076

CONTROL PANEL ELEVATION & BACKPAN LAYOUT

RECOMMENDED FOR BIDDING BY: Lyhak Eam DATE: 2/7/2025
LYHAK EAM, P.E., Public Works Division Manager – Engineering

DWG NO. E04
PROJECT NO. 7076
Rec. Dwg No.
SCALE:
SHEET 46 OF 70

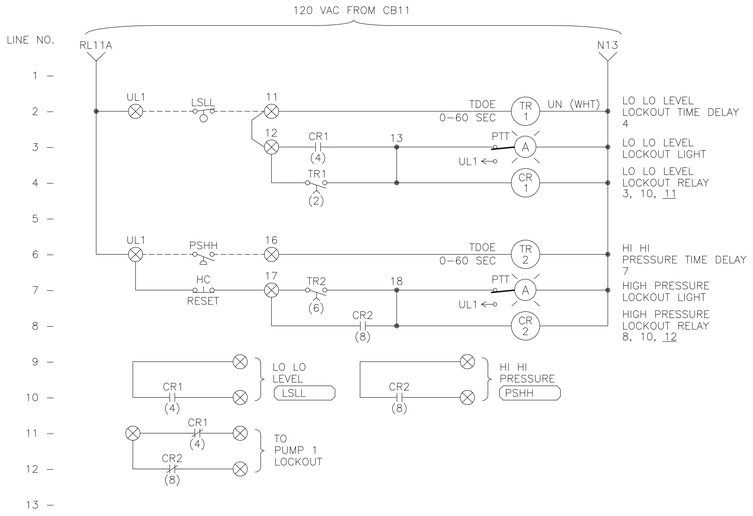

TYPICAL PUMP LOCKOUT ELEMENTARY DIAGRAM (A / E05) (1)

NOTES: (1) PUMP LOCKOUT PER P&ID.

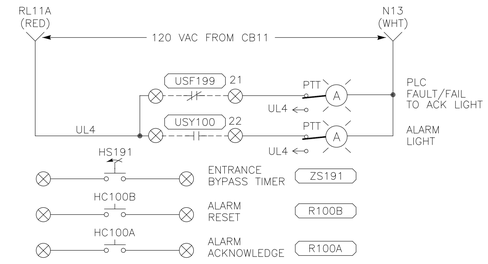

CP ELEMENTARY DIAGRAM (B / E05)

NOTES: (1) WIRES & TERMINALS LABELLED PER LOOP DIAGRAMS.

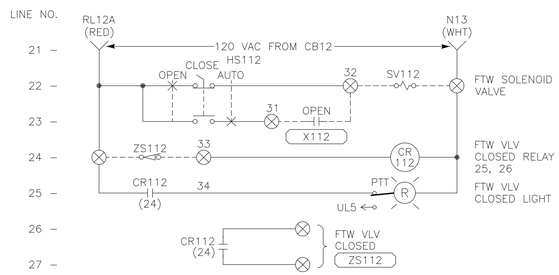

FLUSH TO WASTE VALVE ELEMENTARY DIAGRAM (C / E05)

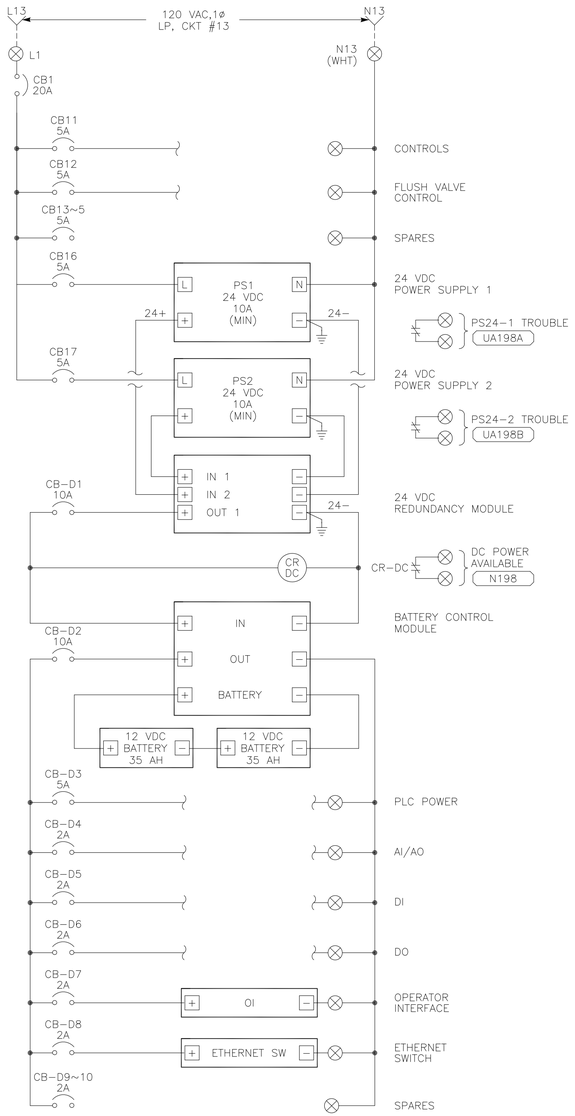

120 VAC POWER DISTRIBUTION DIAGRAM (D / E05) (1)

NOTES: (1) DISTRIBUTION DIAGRAM REPRESENTATIVE OF MAJOR COMPONENTS ONLY. ADDITIONAL FUSES, CIRCUITS AND COMPONENT CONNECTIONS MAY BE REQUIRED FOR A FUNCTIONAL SYSTEM.

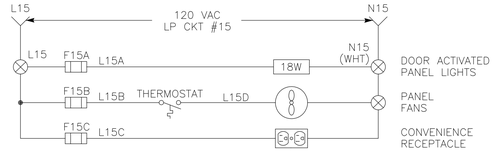

CP UTILITY ELEMENTARY DIAGRAM (E / E05)

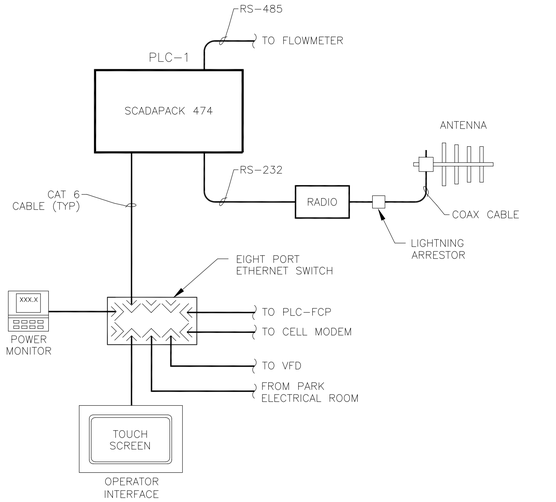

PLC BLOCK DIAGRAM (F / E05) (1)

NOTES: (1) SEE SPECS FOR DETAILS OF CITY'S REQUIREMENTS.

T.E.E.M.
(916) 457-8144
FILE: 2312G
© NOVEMBER 2024
ATEEM ENGINEERING
ALL RIGHTS RESERVED

WEST YOST
Water. Engineered.
6800 Koll Center Parkway
Suite 150
Pleasanton, CA 94566
(925) 426-2580
FAX (530) 756-5991

Designer Stamp: REGISTERED PROFESSIONAL ENGINEER — JAMES M. KING — NO. 13698 — Exp.6-30-2026 — ELECTRICAL — STATE OF CALIFORNIA — 2/5/2025

Record Drawings

Designer: _____ Date: _____
Public Works Inspector: _____ Date: _____
Utility/Facility Dept. Head: _____ Date: _____
Project Engineer: _____ Date: _____
Public Improvements Initially Accepted by the City Council on: _____ Res. No. _____

Drawn By: ZK Date: 2/5/2025
Checked By: XL Date: 2/5/2025
Designed By: SK Date: 2/5/2025

Revisions

Num.	Description	Engr. Aprv.	Date
1			

CITY OF MILPITAS — CALIFORNIA — JANUARY 26, 1954

CITY OF MILPITAS
ENGINEERING DIVISION

McCANDLESS WELL FACILITY
PROJECT NO. 7076

CONTROL PANEL ELEMENTARY DIAGRAMS

RECOMMENDED FOR BIDDING BY: Lyhak Eam DATE: 2/7/2025
LYHAK EAM, P.E., Public Works Division Manager – Engineering

DWG NO. E05
PROJECT NO. 7076
Rec. Dwg No.
SCALE:
SHEET 47 OF 70

Z:\ACADWG\2023\2312g\2312gE005.dwg

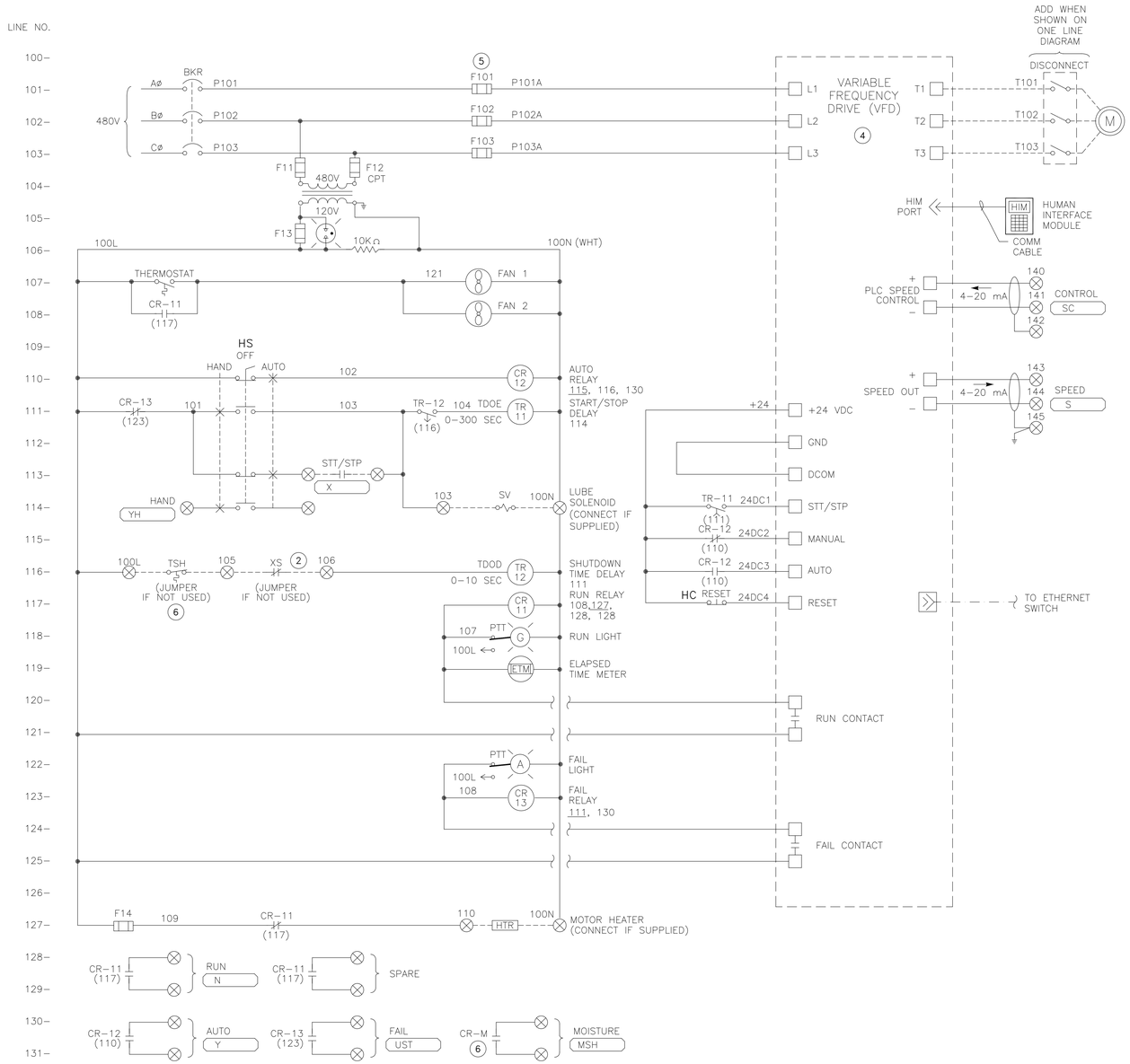

VFD ELEMENTARY DIAGRAM (1)

NOTES:

1. USE 100 SERIES WIRES & TERMINAL #s FOR MSBB–1, 200 #s FOR MSBB–2, ETC.
2. REMOTE SHUTDOWN XS => LSLL, ZSHH, PSHH, ETC., PER P&ID, JUMPER IF NOT USED. THESE ARE TO BE CONTACTS OFF OF AUXILIARY RELAY CONTACTS LOCATED IN MSBB CONTROL PANEL DRIVEN FROM FIELD DEVICE.
3. EQUIPMENT NAMEPLATE TO CONTAIN EQUIPMENT DESCRIPTION AND EQUIPMENT NUMBER PER ELEVATION DIAGRAM. MOUNT ON OR ABOVE DEVICE BOX ON FCS.
4. VFD WITH ELECTRONIC OVERLOAD & BUILT–IN LCL LINE FILTER.
5. SIZE FUSES PER MANUFACTURER'S RECOMMENDATIONS.
6. INSTALL MOISTURE RELAY AND ASSOCIATED DEVICES SUPPLIED WITH PUMP WHEN AVAILABLE.

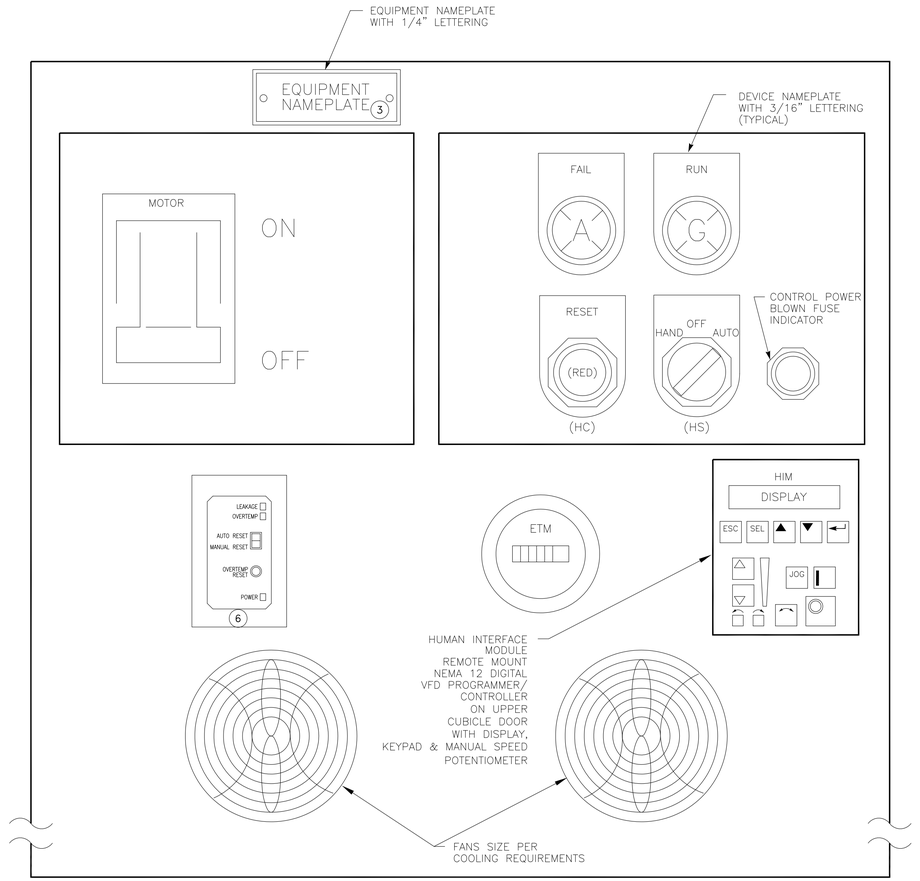

MSBB DOOR LAYOUT

NOT TO SCALE

T.E.E.M.
(916) 457-8144
FILE: 2312G
© NOVEMBER 2024
ATEEM ENGINEERING
ALL RIGHTS RESERVED

WEST YOST
Water. Engineered.
6800 Koll Center Parkway
Suite 150
Pleasanton, CA 94566
(925) 426-2580
FAX (530) 756-5991

Designer Stamp:

REGISTERED PROFESSIONAL ENGINEER — JAMES M. KIMLEY — NO. 15698 — Exp.6-30-2026 — ELECTRICAL — STATE OF CALIFORNIA

2/5/2025

Record Drawings

Designer: _____ Date: _____
Public Works Inspector: _____ Date: _____
Utility/Facility Dept. Head: _____ Date: _____
Project Engineer: _____ Date: _____
Public Improvements Initially Accepted by the City Council on: _____ Res. No. _____

Drawn By: ZK Date: 2/5/2025
Checked By: XL Date: 2/5/2025
Designed By: SK Date: 2/5/2025

Revisions

Num.	Description	Engr. Aprv.	Date
1			

CITY OF MILPITAS
ENGINEERING DIVISION

McCANDLESS WELL FACILITY
PROJECT NO. 7076

VFD ELEMENTARY DIAGRAM

RECOMMENDED FOR BIDDING BY: *Lyhak Eam* DATE: 2/7/2025
LYHAK EAM, P.E., Public Works Division Manager – Engineering

DWG NO. E06
PROJECT NO. 7076
Rec. Dwg No.
SCALE:
SHEET 48 OF 70

Z:\ACADWG\2023\2312g\2312gE006.dwg

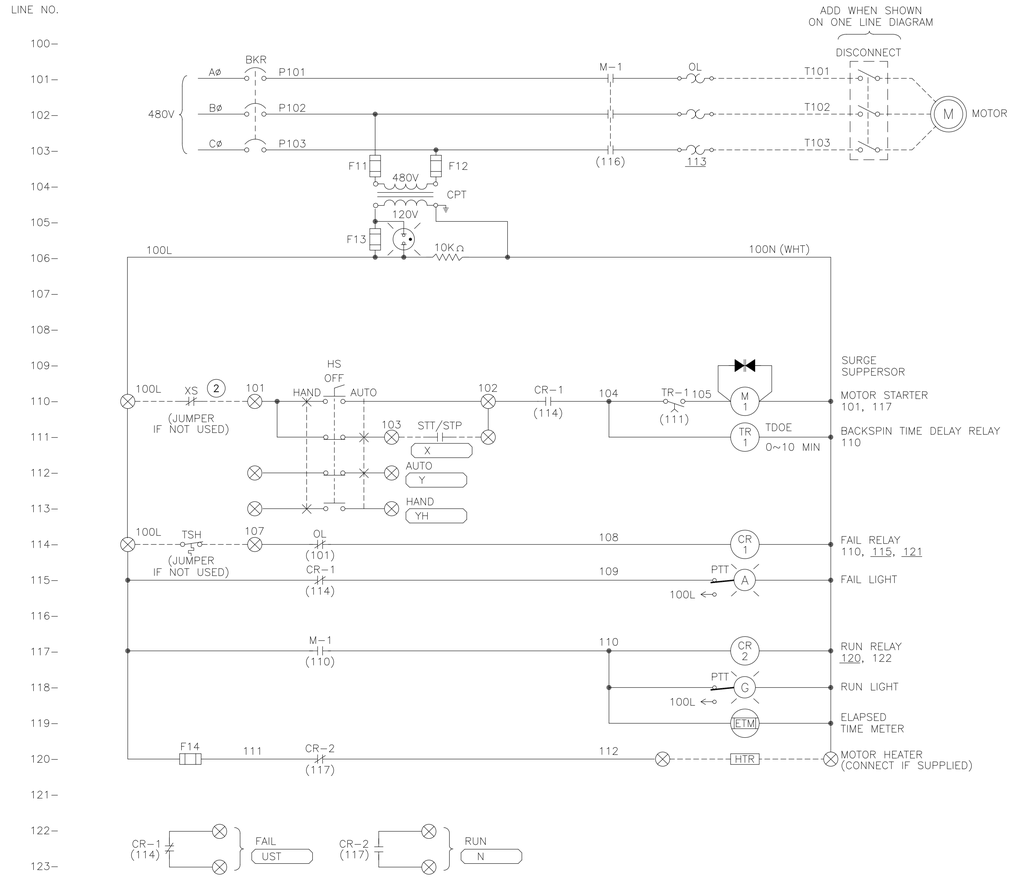

FULL SPEED ELEMENTARY DIAGRAM (1)

NOTES:

1. USE 100 SERIES WIRES & TERMINAL #s FOR MSBB-1, 200 #s FOR MSBB-2, ETC.
2. REMOTE SHUTDOWN XS => LSLL, ZSHH, PSHH, ETC., PER P&ID, JUMPER IF NOT USED. THESE ARE TO BE CONTACTS OFF OF AUXILIARY RELAY CONTACTS LOCATED IN MSBB CONTROL PANEL DRIVEN FROM FIELD DEVICE.
3. EQUIPMENT NAMEPLATE TO CONTAIN EQUIPMENT DESCRIPTION AND EQUIPMENT NUMBER PER ELEVATION DIAGRAM. MOUNT ON OR ABOVE DEVICE BOX ON FCS.

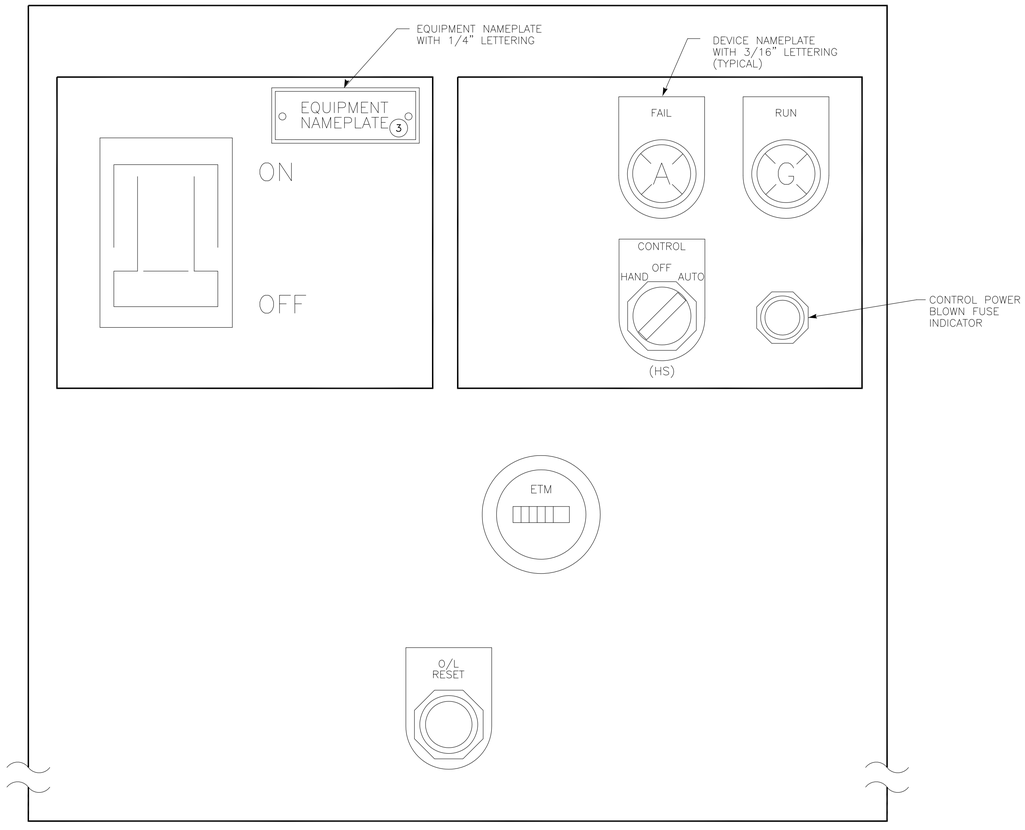

MSBB DOOR LAYOUT

NOT TO SCALE

T.E.E.M.
(916) 457-8144
FILE: 2312G
© NOVEMBER 2024
ATEEM ENGINEERING
ALL RIGHTS RESERVED

WEST YOST
Water. Engineered.
6800 Koll Center Parkway
Suite 150
Pleasanton, CA 94566
(925) 426-2580
FAX (530) 756-5991

Designer Stamp: REGISTERED PROFESSIONAL ENGINEER — JAMES M. KING — NO. 13698 — Exp.6-30-2026 — ELECTRICAL — STATE OF CALIFORNIA
2/5/2025

Record Drawings

Designer: _____ Date: _____
Public Works Inspector: _____ Date: _____
Utility/Facility Dept. Head: _____ Date: _____
Project Engineer: _____ Date: _____
Public Improvements Initially Accepted by the City Council on: _____ Res. No. _____

Drawn By: ZK Date: 2/5/2025
Checked By: XL Date: 2/5/2025
Designed By: SK Date: 2/5/2025

Revisions

Num.	Description	Engr. Aprv.	Date
1			

CITY OF MILPITAS
ENGINEERING DIVISION

McCANDLESS WELL FACILITY
PROJECT NO. 7076

FULL SPEED ELEMENTARY DIAGRAM

RECOMMENDED FOR BIDDING BY: Lyhak Eam DATE: 2/7/2025
LYHAK EAM, P.E., Public Works Division Manager – Engineering

DWG NO. E07
PROJECT NO. 7076
Rec. Dwg No.
SCALE:
SHEET 49 OF 70

Z:\ACADWG\2023\2312g\2312gE007.dwg

NOTES:

1. CONDUIT SIZE & TYPE; WIRE FILL FOR CONDUITS TO BE DESIGNATED NEXT TO CONDUIT NUMBER ELLIPSE.
2. THESE ARE THE CONTRACTOR DESIGNATED DRAWING NUMBERS.
3. NOT MORE THAN TWO WIRES PER TERMINAL BLOCK.
4. ALL TERMINAL BLOCKS TO BE PLACED IN NUMERICAL ORDER.
5. ALL NEUTRALS SHALL BE WHITE WIRE COLOR.
6. #12 GND TO DEVICES SHALL BE BONDED TO #8 GND LUG.

REFERENCE DOCUMENTS

DRAWING #	DESCRIPTION	MANUFACTURER
P712	P&ID DIAGRAM	DESIGN
E717	ELECTRICAL SITE PLAN	DESIGN
PAGE 32, 36	CONDUIT AND CABLE SCHEDULE	DESIGN
(2) 1354-11	LOOP DIAGRAM	CONTRACTOR
(2) 1354-68	ELEMENTARY DIAGRAM	CONTRACTOR

TYPICAL CONDUIT MARKING SYSTEM

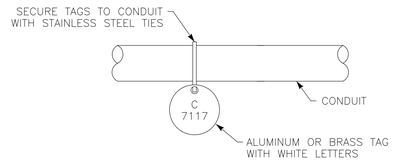

TYPICAL WIRE LABEL

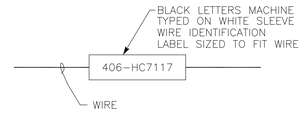

EQUIPMENT

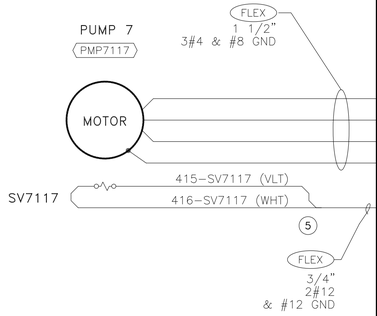

FIELD

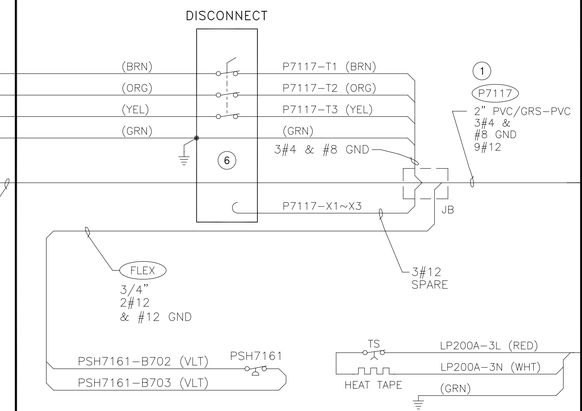

MCC-4 SECTION 1 CUBICLE A~E

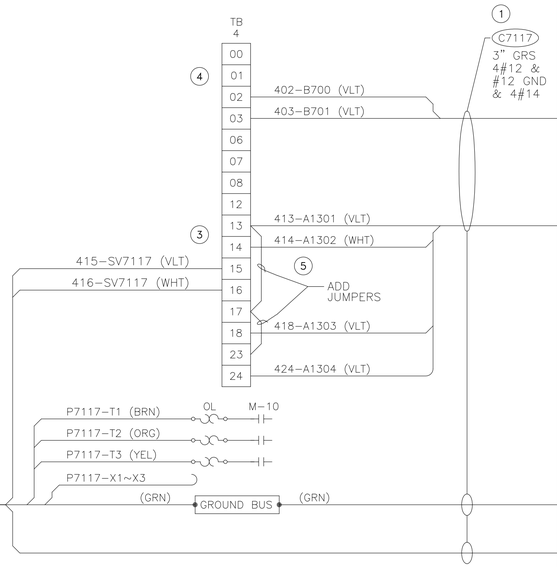

CONTROL PANEL NO.2

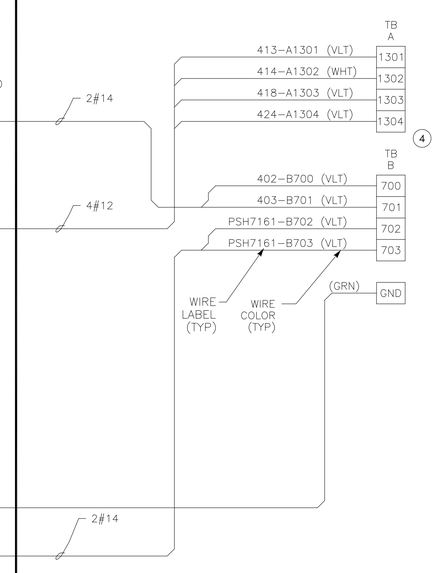

PANELBOARD LP200A

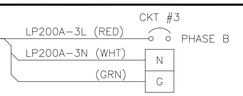

EXAMPLE INTERCONNECTION DIAGRAM

(THIS DRAWING ILLUSTRATES THE FORMAT THAT SHALL BE FOLLOWED IN PREPARATION OF ALL INTERCONNECT DWGS)

T.E.E.M.
(916) 457-8144

FILE: 2312G
© NOVEMBER 2024
ATEEM ENGINEERING
ALL RIGHTS RESERVED

WEST YOST
Water. Engineered.
6800 Koll Center Parkway
Suite 150
Pleasanton, CA 94566
(925) 426-2580
FAX (530) 756-5991

Designer Stamp: REGISTERED PROFESSIONAL ENGINEER — JAMES M. KING — NO. 13698 — Exp.6-30-2026 — ELECTRICAL — STATE OF CALIFORNIA
2/5/2025

Record Drawings

Designer: _____ Date: _____
Public Works Inspector: _____ Date: _____
Utility/Facility Dept. Head: _____ Date: _____
Project Engineer: _____ Date: _____
Public Improvements Initially Accepted by the City Council on: _____ Res. No. _____

Drawn By: ZK Date: 2/5/2025
Checked By: XL Date: 2/5/2025
Designed By: SK Date: 2/5/2025

Revisions

Num.	Description	Engr. Aprv.	Date
1			

CITY OF MILPITAS — CALIFORNIA — JANUARY 26, 1954

CITY OF MILPITAS
ENGINEERING DIVISION

McCANDLESS WELL FACILITY
PROJECT NO. 7076

EXAMPLE INTERCONNECTION DIAGRAM

RECOMMENDED FOR BIDDING BY: *Lyhak Eam* DATE: 2/7/2025
LYHAK EAM, P.E., Public Works Division Manager – Engineering

DWG NO. E10
PROJECT NO. 7076
Rec. Dwg No.
SCALE:
SHEET 50 OF 70

Z:\ACADDWG\2023\2312g\2312gE010.dwg

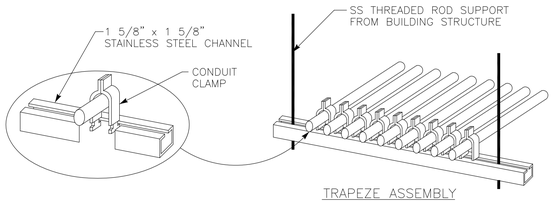

TRAPEZE ASSEMBLY

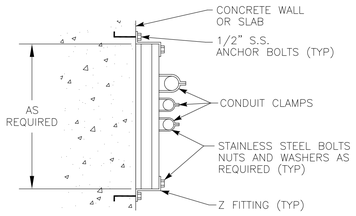

CONDUIT SUPPORT

CONDUIT UNISTRUT MOUNTING DETAIL (A, E11)

NOT TO SCALE

NOTES:
1. THIS DETAIL TYPICAL FOR BOTH VERTICAL AND HORIZONTAL MOUNTING.
2. CHANNEL AND ALL SUPPORT DEVICES TO BE NEMA RATED PER AREA CLASSIFICATION. FIELD COAT ALL CUTS, ETC. TO MATCH.
3. CHANNELS TO BE SPACED 5' MAXIMUM.

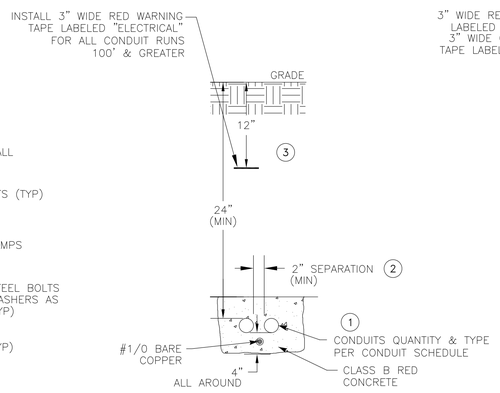

ENCASED CONDUITS DETAIL (B, E11)

NOT TO SCALE

NOTES:
1. PLACE CONDUIT RUNS OF 4 CONDUITS OR GREATER IN PLASTIC SPACERS (RATED FOR DIRECT BURIAL) EVERY 5' ALONG LENGTH OF RUN.
2. PROVIDE 12" (MIN) SEPARATION BETWEEN "A, C & D" TYPE GROUP AND "L & P" TYPE GROUP CONDUITS.
3. TRENCHING & COMPACTED BACKFILL PER CIVIL SPECIFICATIONS.

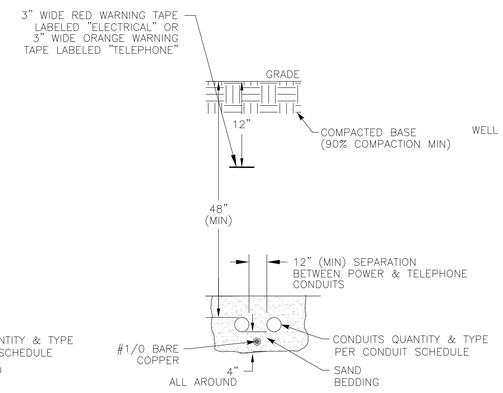

UTILITY CONDUITS DETAIL (C, E11)

NOT TO SCALE

NOTES:
1. PROVIDE SPACERS & JOINTS PER DETAIL DWG E11, DETAIL "D".

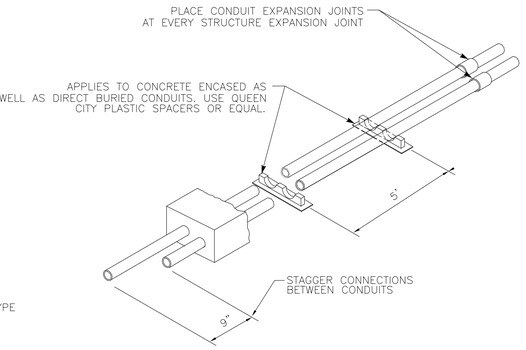

SPACERS AND JOINTS INSTALLATION DETAIL (D, E11)

NOT TO SCALE

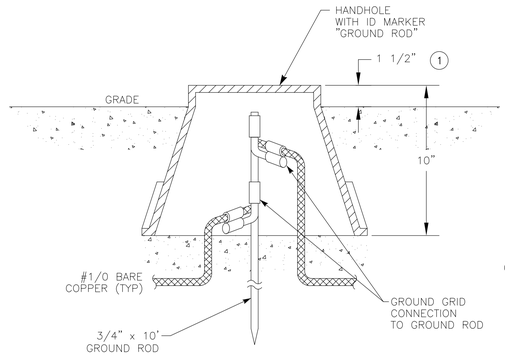

HANDHOLE GROUNDING DETAIL (E, E11)

NOT TO SCALE

NOTES:
1. FLUSH IN PAVED AREAS.

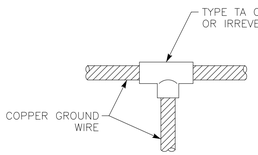

GROUND CABLE CONNECTION DETAIL (F, E11)

NOT TO SCALE

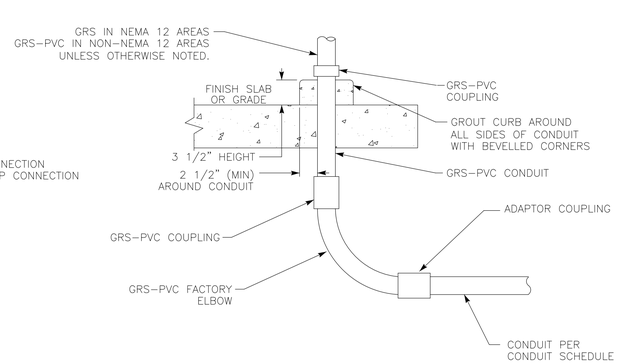

EXPOSED CONDUIT TRANSITION DETAIL (G, E11)

NOT TO SCALE

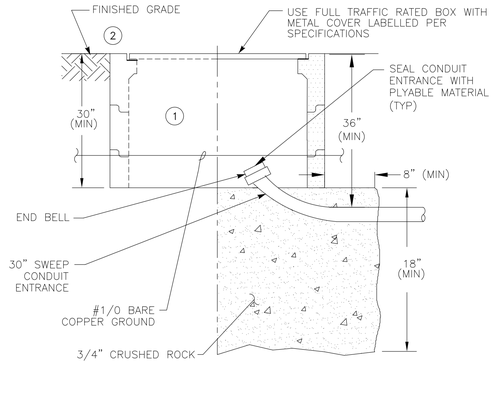

PULL BOX DETAIL (H, E11) 3

NOT TO SCALE

NOTES:
1. TRAFFIC RATED CHRISTY "B" SERIES OR EQUAL, MINIMUM BOX SIZE PER PLANS. PROVIDE LARGER AT NO ADDTIONAL COST TO OWNER.
2. ADD EXTENSIONS WHERE NECESSARY TO RAISE COVER TO FINISHED GRADE.
3. GROUND COVER FRAME, COVER AND OTHER EXPOSED METAL PARTS TO #2/0 BARE COPPER GROUND CABLE.

T.E.E.M.
(916) 457-8144

FILE: 2312G
© NOVEMBER 2024
ATEEM ENGINEERING
ALL RIGHTS RESERVED

WEST YOST
Water. Engineered.
6800 Koll Center Parkway
Suite 150
Pleasanton, CA 94566
(925) 426-2580
FAX (530) 756-5991

Designer Stamp: REGISTERED PROFESSIONAL ENGINEER — JAMES M. KIMLEY — NO. 19598 — Exp.6-30-2026 — ELECTRICAL — STATE OF CALIFORNIA
2/5/2025

Record Drawings

Designer: _____ Date: _____
Public Works Inspector: _____ Date: _____
Utility/Facility Dept. Head: _____ Date: _____
Project Engineer: _____ Date: _____
Public Improvements Initially Accepted by the City Council on: _____ Res. No. _____

Drawn By: ZK Date: 2/5/2025
Checked By: XL Date: 2/5/2025
Designed By: SK Date: 2/5/2025

Revisions

Num.	Description	Engr. Aprv.	Date
1			

CITY OF MILPITAS
ENGINEERING DIVISION

McCANDLESS WELL FACILITY
PROJECT NO. 7076

TYPICAL ELECTRICAL DETAILS NO.1

RECOMMENDED FOR BIDDING BY: Lyhak Eam DATE: 2/7/2025
LYHAK EAM, P.E., Public Works Division Manager – Engineering

DWG NO. E11
PROJECT NO. 7076
Rec. Dwg No.
SCALE:
SHEET 51 OF 70

Z:\ACADDWG\2023\2312g\2312gE011.dwg

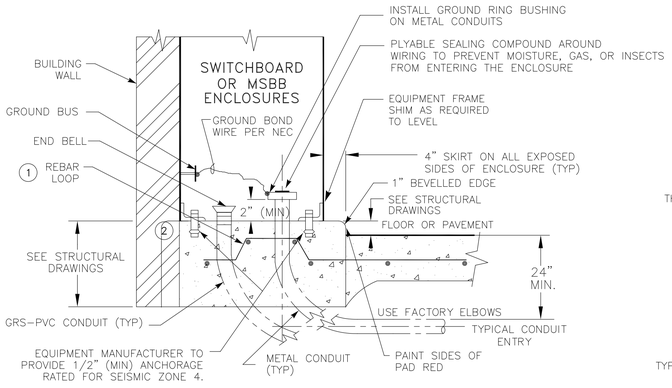

HOUSEKEEPING CONCRETE PAD DETAIL

NOT TO SCALE — A / E12

NOTES: (1) CONCRETE PAD ABOVE FLOOR TO BE POURED AFTER MAIN PAD HAD BEEN POURED. PAD ABOVE FLOOR TO BE CLASS "A" CONCRETE COMPOSITION ACCURATELY LEVELED WITHIN 1/16 INCH. REBAR TO BE #4 @ 12" CROSSWAYS & VERTICAL EVERY 6" (MINIMUM) OR AS CALLED OUT IN STRUCTURAL DRAWINGS.

(2) IF NO BUILDING WALL EXTEND PAD 4" BEYOND ENCLOSURE ON BACK & SIDES.

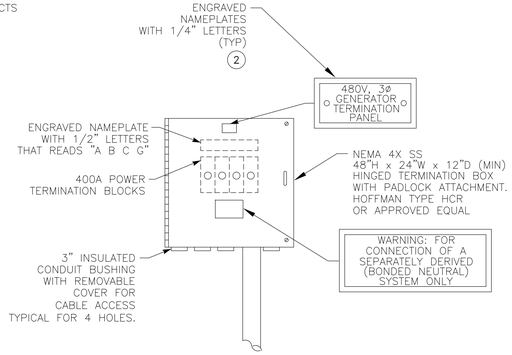

GENERATOR TERMINATION PANEL DETAIL

NOT TO SCALE — B / E12

NOTES: (1) INSTALL ON WALL WITH STAINLESS STEEL UNISTRUT, HARDWARE & ANCHORS.

(2) ATTACH NAMEPLATES WITH SS SCREWS.

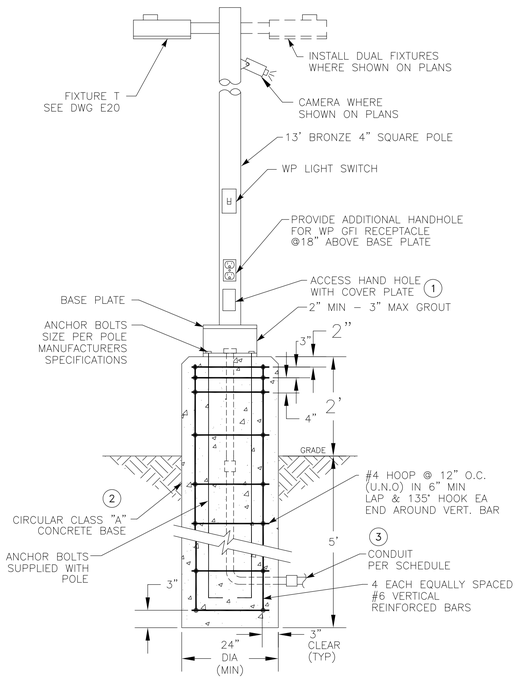

AREA LIGHT DETAIL

NOT TO SCALE — C / E12

NOTES: (1) PROVIDE 2 POLE FUSE HOLDER WITH FUSES & RUBBER BOOTS ON LIGHT WIRING FEED INSIDE HANDHOLE.

(2) PLACE FINISH CONCRETE ON EXPOSED SURFACE AFTER FORMING TUBE IS REMOVED.

(3) WHERE SHOWN ROUTE XD-CONDUIT INTO AREA LIGHT BASE.

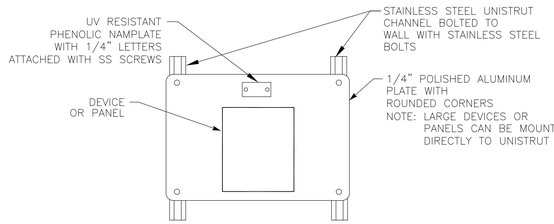

WALL PLATE SUPPORT DETAIL

NOT TO SCALE — D / E12

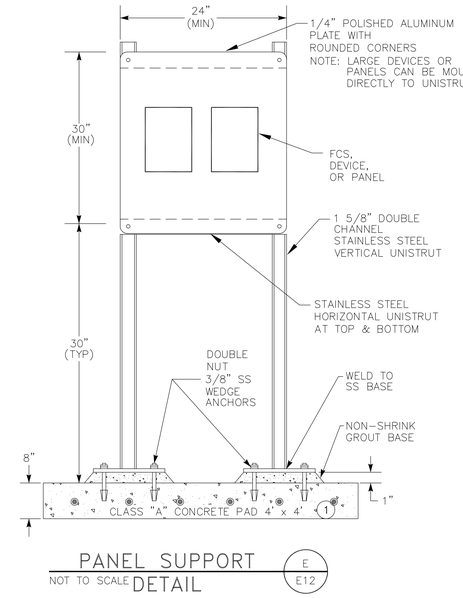

PANEL SUPPORT DETAIL

NOT TO SCALE — E / E12

NOTES: (1) #3 REBAR CROSSWAYS AT 12" INTERVALS INSIDE PAD.

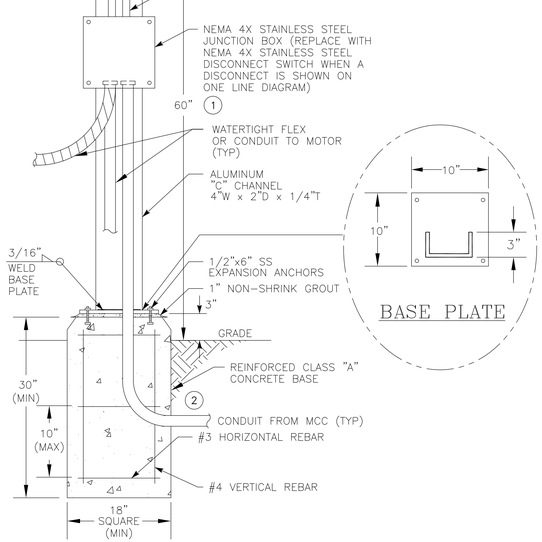

FCS FREESTANDING DETAIL

NOT TO SCALE — F / E12

NOTES: (1) PLACE SS TRANSITION BOX BELOW DISCONNECT IF DISCONNECT SWITCH DOES NOT HAVE ENTRY AREA FOR ALL CONDUITS.

(2) OVERHEAD CONDUIT TO ENTER FROM TOP PER SITE PLAN.

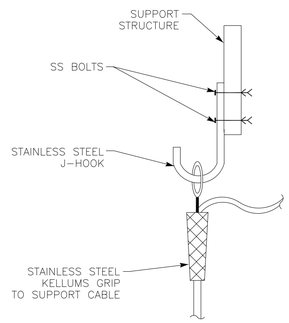

CABLE SUPPORT DETAIL

NOT TO SCALE — G / E12

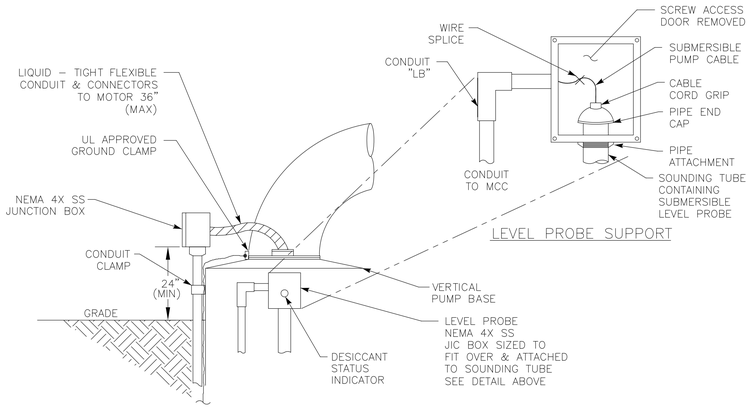

LEVEL PROBE SUPPORT

WELL PUMP CONNECTION DETAIL

NOT TO SCALE — H / E12 (1)

NOTES: (1) SEE MECHANICAL DETAILS FOR WELL PUMP INSTALLATION DETAILS.

T.E.E.m.
(916) 457-8144
FILE: 2312G
© NOVEMBER 2024
ATEEM ENGINEERING
ALL RIGHTS RESERVED

Z:\ACADDWG\2023\2312g\2312gE012.dwg

WEST YOST
Water. Engineered.
6800 Koll Center Parkway
Suite 150
Pleasanton, CA 94566
(925) 426-2580
FAX (530) 756-5991

Designer Stamp: REGISTERED PROFESSIONAL ENGINEER — JAMES W. KING — NO. 13698 — Exp.6-30-2026 — ELECTRICAL — STATE OF CALIFORNIA
2/5/2025

Record Drawings

Designer: _____ Date: _____
Public Works Inspector: _____ Date: _____
Utility/Facility Dept. Head: _____ Date: _____
Project Engineer: _____ Date: _____
Public Improvements Initially Accepted by the City Council on: _____ Res. No. _____

Drawn By: ZK Date: 2/5/2025
Checked By: XL Date: 2/5/2025
Designed By: SK Date: 2/5/2025

Revisions

Num.	Description	Engr. Aprv.	Date
1			

CITY OF MILPITAS — CALIFORNIA — JANUARY 20, 1954

CITY OF MILPITAS
ENGINEERING DIVISION

McCANDLESS WELL FACILITY
PROJECT NO. 7076

TYPICAL ELECTRICAL DETAILS NO.2

RECOMMENDED FOR BIDDING BY: Lyhak Eam DATE: 2/7/2025
LYHAK EAM, P.E., Public Works Division Manager – Engineering

DWG NO. E12
PROJECT NO. 7076
Rec. Dwg No.
SCALE:
SHEET 52 OF 70

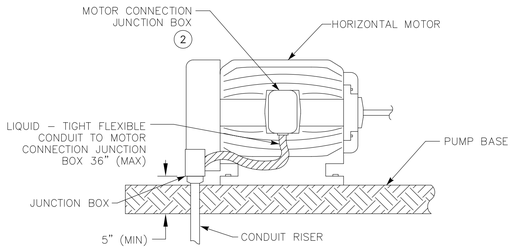

HORIZONTAL MOTOR CONNECTION DETAIL

NOT TO SCALE — A / E13

NOTES: (1) MOTOR MAKE–UP PER DWG E13, DET "B".

(2) PROVIDE LARGER MOTOR JUNCTION BOX TO ACCOMMODATE CONDUIT AND WIRES LISTED IN "CONDUIT AND WIRE ROUTING SCHEDULE".

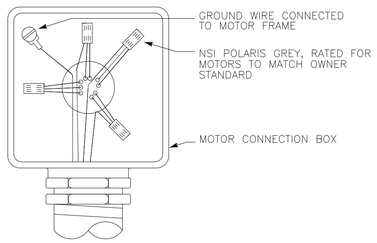

MOTOR MAKE–UP DETAIL

NOT TO SCALE — B / E13

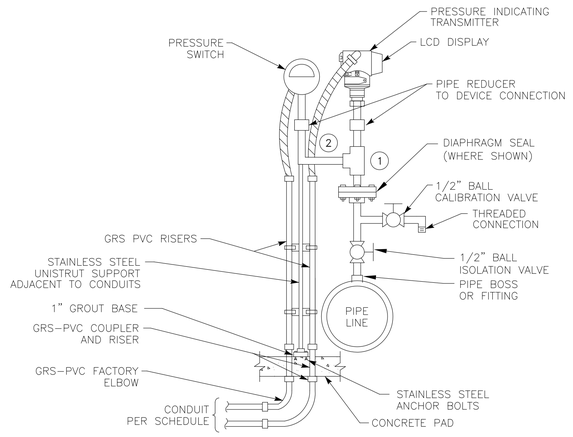

PRESSURE SWITCH/INDICATOR DETAIL

NOT TO SCALE — C / E13

NOTES: (1) 1/2" GALVANIZED PIPING & VALVES

(2) SUPPORT HORIZONTAIL PIPE WITH SS CLAMP TO VERTICAL UNISTRUT.

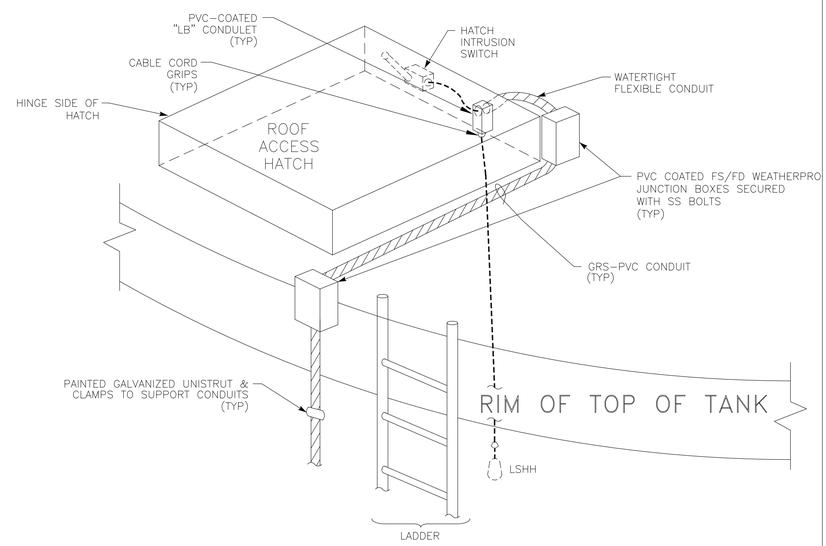

TANK HATCH DETAIL

NOT TO SCALE — D / E13

NOTES: (1) THIS DETAIL SHOWS GENERAL INSTALLATION REQUIREMENTS. ADJUST ACCORDINGLY FOR HATCH ARRANGEMENT SHOWN ON CIVIL DWGS.

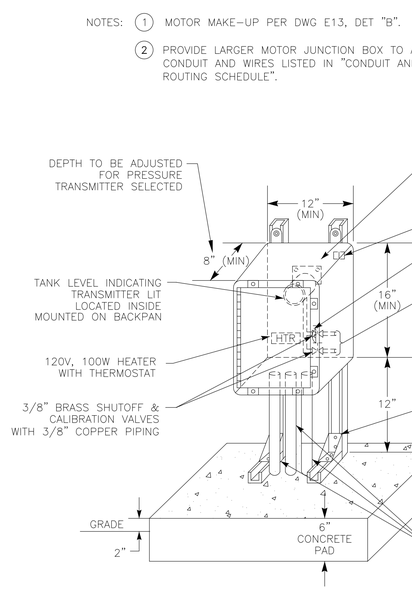

LEVEL TRANSMITTER ENCLOSURE DETAIL

NOT TO SCALE — E / E13

NOTES: (1) LOCATED WITH VAULT.

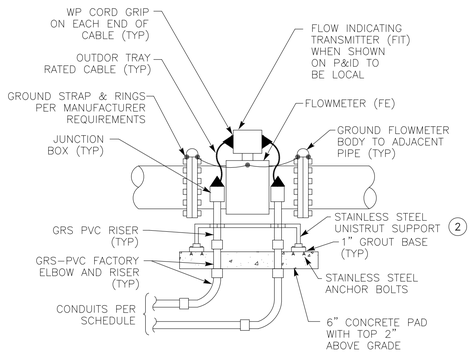

ABOVE GRADE FLOWMETER DETAIL

NOT TO SCALE — F / E13

NOTES: (1) SIMILAR INSTALLATION SHALL BE USED FOR VERTICAL PIPES.

(2) SUPPORT WITH TWO HOLE BASE ON EACH SIDE AND HEIGHT OF HORIZONTAL UNISTRUT SUPPORT TO BE 12" MINIMUM.

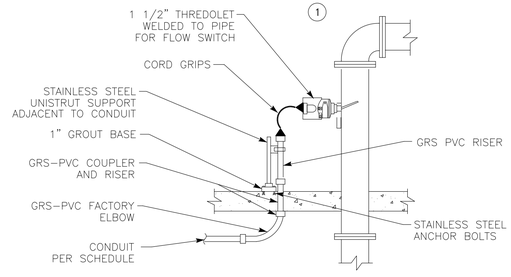

FLOW SWITCH DETAIL

NOT TO SCALE — G / E13

NOTE: (1) LOCATE ON HORIZONTAL OR VERTICAL PIPE AS SHOWN ON MECHANICAL PLAN. FOR SMALL DIAMETER PIPES INSTALL A PIPE TEE.

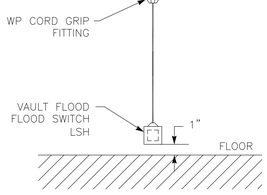

FLOOD SWITCH DETAIL

NOT TO SCALE — H / E13

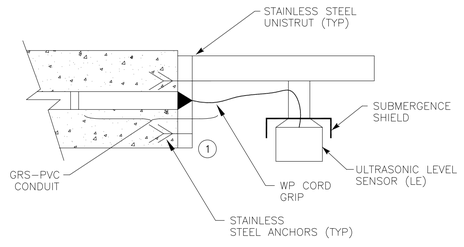

ULTRASONIC SENSOR DETAIL

NOT TO SCALE — I / E13

NOTES: (1) CONDUIT TO ENTER THROUGH SIDE OF WETWELL ACCESS OPENNING.

Z:\ACADDWG\2023\2312g\2312gE013.dwg

T.E.E.M.
(916) 457-8144
FILE: 2312G
© NOVEMBER 2024
ATEEM ENGINEERING
ALL RIGHTS RESERVED

WEST YOST
Water. Engineered.
6800 Koll Center Parkway
Suite 150
Pleasanton, CA 94566
(925) 426-2580
FAX (530) 756-5991

Designer Stamp: REGISTERED PROFESSIONAL ENGINEER — JAMES N. KING — NO. 13698 — Exp.6-30-2026 — ELECTRICAL — STATE OF CALIFORNIA — 2/5/2025

Record Drawings

Designer: _____ Date: _____

Public Works Inspector: _____ Date: _____

Utility/Facility Dept. Head: _____ Date: _____

Project Engineer: _____ Date: _____

Public Improvements Initially Accepted by the City Council on: _____ Res. No. _____

Drawn By: ZK Date: 2/5/2025

Checked By: XL Date: 2/5/2025

Designed By: SK Date: 2/5/2025

Revisions

Num.	Description	Engr. Aprv.	Date
1			

CITY OF MILPITAS — CALIFORNIA — JANUARY 26, 1954

CITY OF MILPITAS
ENGINEERING DIVISION

McCANDLESS WELL FACILITY
PROJECT NO. 7076

TYPICAL ELECTRICAL DETAILS NO.3

RECOMMENDED FOR BIDDING BY: *Lyhak Eam* DATE: 2/7/2025
LYHAK EAM, P.E., Public Works Division Manager – Engineering

DWG NO. E13
PROJECT NO. 7076
Rec. Dwg No.
SCALE:
SHEET 53 OF 70

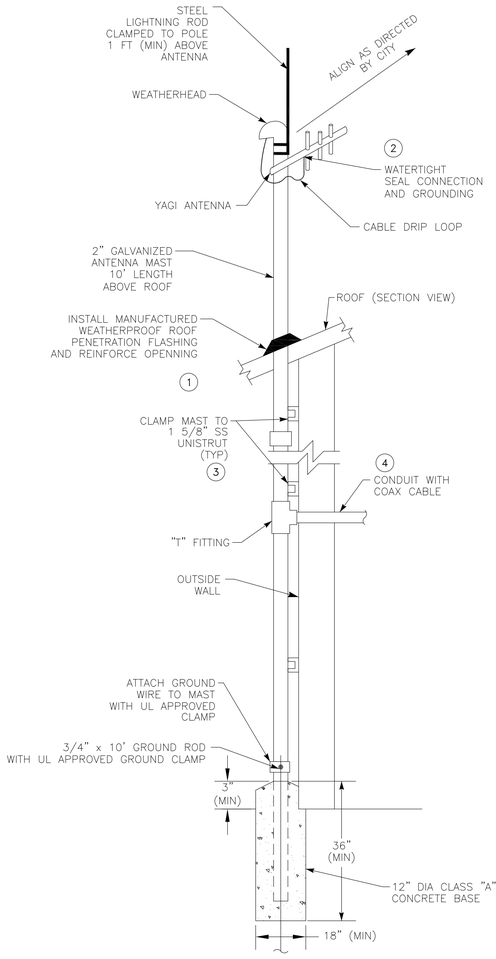

ANTENNA INSTALLATION DETAIL (A / E14)
NOT TO SCALE

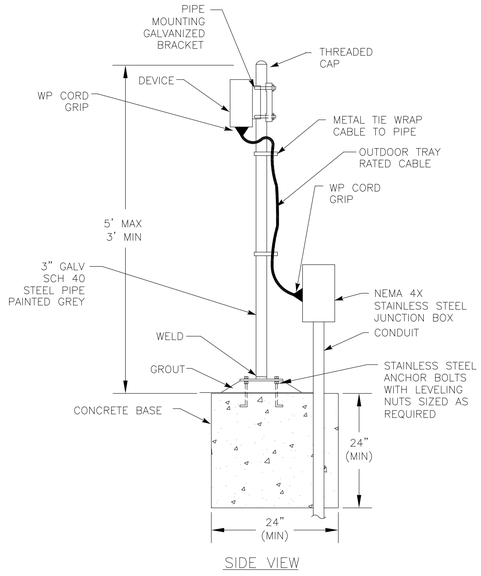

SIDE VIEW

FLOOR PIPE SUPPORT DETAIL (B / E14)
NOT TO SCALE

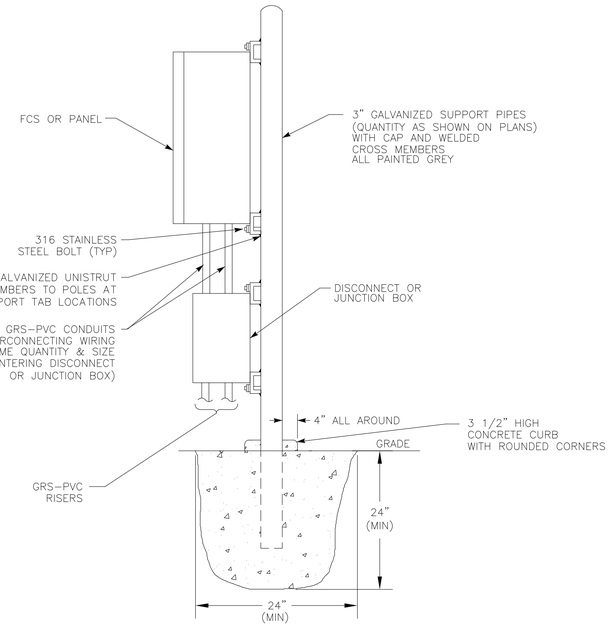

PANEL SUPPORT DETAIL (C / E14)
NOT TO SCALE

NOTES:
1. SEAL FLASHING WITH BLACK TAR ROOFING COMPOUND (MASTIC OR EQUAL) AND TEST AREA FOR LEAKS. PAINT FLASHING TO MATCH COLOR OF ROOF.
2. MAKE CONNECTION WITH GROUND KIT OR EQUAL.
3. ALL CLAMPS AND MOUNTING HARDWARE TO BE STAINLESS STEEL. PAINT EXPOSED PORTIONS OF ANTENNA, MAST, SLEEVE AND SUPPORTS UNDER ROOF TO MATCH COLOR OF WALL.
4. SEE SHEET M06 FOR WALL PENETRATION.

T.E.E.M.
(916) 457-8144
FILE: 2312G
© NOVEMBER 2024
ATEEM ENGINEERING
ALL RIGHTS RESERVED

WEST YOST
Water. Engineered.
6800 Koll Center Parkway
Suite 150
Pleasanton, CA 94566
(925) 426-2580
FAX (530) 756-5991

Designer Stamp:
REGISTERED PROFESSIONAL ENGINEER — JAMES M. KIMLEY — NO. 15698 — Exp.6-30-2026 — ELECTRICAL — STATE OF CALIFORNIA
2/5/2025

Record Drawings

Designer: _____ Date: _____
Public Works Inspector: _____ Date: _____
Utility/Facility Dept. Head: _____ Date: _____
Project Engineer: _____ Date: _____
Public Improvements Initially Accepted by the City Council on: _____ Res. No. _____

Drawn By: ZK Date: 2/5/2025
Checked By: XL Date: 2/5/2025
Designed By: SK Date: 2/5/2025

Revisions

Num.	Description	Engr. Aprv.	Date
△			

CITY OF MILPITAS
ENGINEERING DIVISION

McCANDLESS WELL FACILITY
PROJECT NO. 7076

TYPICAL ELECTRICAL DETAILS NO.4

RECOMMENDED FOR BIDDING BY: Lyhak Eam DATE: 2/7/2025
LYHAK EAM, P.E., Public Works Division Manager – Engineering

DWG NO. E14
PROJECT NO. 7076
Rec. Dwg No.
SCALE:
SHEET 54 OF 70

Z:\ACADDWG\2023\2312g\2312gE014.dwg

CONDUIT & WIRE ROUTING SCHEDULE

REF DWG	CONDUIT NO.	FROM	TO	QTY	SIZE	TYPE	OCPD AMP	PWR QTY	PWR SIZE	GND SIZE	CONTROL QTY	CONTROL SIZE	SIGNAL QTY	SIGNAL SIZE	NOTES
E21	A 151 A	MSBB	LT151 JB	1	1"	GRS-PVC	1	-	-	#12	-	-	2	#16 TSPR	
E21	A 151 B	LT151 JB	LT151	1	1"	GRS-PVC	-	-	-	-	-	-	1	MNFR CBL	
E21	A 161 A	MSBB	PIT161	1	1-1/2"	GRS-PVC	1	2	#14	#12	-	-	2	#16 TSPR	
E30C	A 200 A	MSBB	FCP	1	1-1/2"	GRS-PVC	1	-	-	#12	-	-	6	#16 TSPR	
E22	A 262 A	FCP	DPIT262	1	1"	GRS-PVC	1	2	#14	#12	-	-	2	#16 TSPR	
E22	A 271 A	FCP	FIT271/PIT263	1	1-1/2"	GRS-PVC	1	2	#14	#12	-	-	3	#16 TSPR	
E30C	A 281 A	FCP	AIT281/3	1	2"	GRS-PVC	2	-	-	#12	-	-	12	#16 TSPR	
E30C	A 282 A	AIT281/3 JB	AIT282	1	1-1/2"	GRS-PVC	-	-	-	#12	-	-	6	#16 TSPR	
E21	A 351 A	MSBB	LIT351	1	1"	GRS-PVC	1	2	#14	#12	-	-	1	#16 TSPR	
E30C	A 371 A	FCP	FIT371	1	1"	GRS-PVC	1	2	#14	#12	-	-	2	#16 TSPR	
E21	A 373 A	MSBB	FE373	1	1"	GRS-PVC	-	-	-	-	-	-	1	MNFR CBL	
E30C	A 411 A	MSBB	P411/2 JB	1	1-1/2"	GRS-PVC	1	2	#14	#12	-	-	4	#16 TSPR	
E30C	A 421 A	MSBB	P421/2 JB	1	1-1/2"	GRS-PVC	1	2	#14	#12	-	-	4	#16 TSPR	
E30C	A 431 A	MSBB	P431/2 JB	1	1-1/2"	GRS-PVC	1	2	#14	#12	-	-	4	#16 TSPR	
E30C	A 451 A	P411/2 JB	LIT451	1	1"	GRS-PVC	1	2	#14	#12	-	-	1	#16 TSPR	
E30C	A 453 A	P421/2 JB	LIT453	1	1"	GRS-PVC	1	2	#14	#12	-	-	1	#16 TSPR	
E30C	A 455 A	P421/2 JB	LIT455	1	1"	GRS-PVC	1	2	#14	#12	-	-	1	#16 TSPR	
E30C	C 101 A	MSBB	ATS	1	1"	PVC-40	1	-	-	#12	8	#14	-	-	
E21	C 111 A	MSBB	DISC111	1	1"	PVC-40	1	-	-	#12	8	#14	-	-	
E21	C 112 A	MSBB	SV/ZS112	1	1"	PVC-40	1	-	-	#12	12	#14	-	-	
E21	C 161 A	SV/ZS112 JB	PSHH161	1	1"	PVC-40	1	-	-	#12	4	#14	-	-	
E30C	C 172 A	P431/2 JB	FSH172	1	1"	PVC-40	-	-	-	#12	2	#14	-	-	
E30A	C 191 A	MSBB	ZS191A	1	3/4"	GRS	1	-	-	#12	12	#14	-	-	
E30A	C 191 B	ZS191A JB	ZS191B	1	3/4"	GRS	-	-	-	#12	8	#14	-	-	
E30A	C 191 C	ZS191B JB	ZS191C	1	3/4"	GRS	-	-	-	#12	4	#14	-	-	
E21	C 191 D	MSBB	ZS191D JB	1	1"	PVC-40	1	-	-	#12	8	#14	-	-	
E21	C 191 E	ZS191D JB	ZS191E	1	1"	PVC-40	-	-	-	#12	4	#14	-	-	
E21	C 191 F	MSBB	ZS191F JB	1	1"	PVC-40	1	-	-	#12	8	#14	-	-	
E21	C 191 G	ZS191F JB	ZS191G	1	1"	PVC-40	-	-	-	#12	4	#14	-	-	
E30A	C 192 A	MSBB	SS192A JB	1	1"	GRS	1	-	-	#12	16	#14	-	-	
E30A	C 192 B	SS192A JB	SS192B	1	3/4"	GRS	-	-	-	#12	4	#14	-	-	
E30A	C 192 C	SS192A JB	SS192C JB	1	3/4"	GRS	-	-	-	#12	8	#14	-	-	
E30A	C 192 D	SS192C JB	SS192D	1	3/4"	GRS	-	-	-	#12	4	#14	-	-	
E21	C 193 A	MSBB	ZS193A JB	1	1"	PVC-40	1	-	-	#12	8	#14	-	-	
E21	C 193 B	ZS193A JB	ZS193B	1	1"	PVC-40	-	-	-	#12	4	#14	-	-	
E21	C 193 C	MSBB	ZS193C JB	1	1"	PVC-40	1	-	-	#12	8	#14	-	-	
E21	C 193 D	ZS193C JB	ZS193D	1	1"	PVC-40	-	-	-	#12	4	#14	-	-	
E30C	C 200 A	MSBB	FCP	1	1-1/2"	PVC-40	2	-	-	#12	24	#14	-	-	
E22	C 201 A	FCP	PNL201	1	1-1/2"	PVC-40	-	-	-	#12	20	#14	-	-	
E22	C 202 A	FCP	ZS202 JB	1	1-1/2"	PVC-40	-	-	-	#12	42	#14	-	-	
E22	C 212 A	ZS202 JB	ZS212	1	1"	PVC-40	-	-	-	#12	8	#14	-	-	
E22	C 214 A	FCP	ZS214	1	1"	PVC-40	1	2	#14	#12	8	#14	-	-	
E30C	C 301 A	MSBB	PSH301	1	1"	PVC-40	1	-	-	#12	4	#14	-	-	
E30C	C 301 B	MSBB	FCP	1	1"	PVC-40	2	-	-	#12	12	#14	-	-	
E30C	C 341 A	FCP	PNL341/ACP341	1	1"	PVC-40	-	-	-	#12	8	#14	-	-	
E21	C 351 A	MSBB	LSHH351	1	1"	PVC-40	1	-	-	#12	4	#14	-	-	
E30C	C 371 A	FCP	FIT371	1	1"	PVC-40	-	2	#14	#12	4	#14	-	-	
E21	C 372 A	MSBB	FSH372	1	1"	PVC-40	1	-	-	#12	4	#14	-	-	
E30C	C 411 A	MSBB	PSH/P411/2 JB	1	1"	PVC-40	1	-	-	#12	16	#14	-	-	
E30C	C 421 A	MSBB	PSH/P421/2 JB	1	1"	PVC-40	1	-	-	#12	16	#14	-	-	
E30C	C 431 A	MSBB	PSH/P431/2 JB	1	1"	PVC-40	1	-	-	#12	16	#14	-	-	
E30C	C 452 A	P411/2 JB	LSH452	1	1"	GRS-PVC	-	-	-	#12	2	#14	-	-	
E30C	C 454 A	P421/2 JB	LSH454	1	1"	GRS-PVC	-	-	-	#12	2	#14	-	-	
E30C	C 456 A	P431/2 JB	LSH456	1	1"	GRS-PVC	-	-	-	#12	2	#14	-	-	
E21	D 100 A	CITY COM	FIBER PB	1	4"	Existing	-	-	-	#12	-	-	?	4 PR UG CAT 6	New Wires, Relabel COND
E30C	D 100 A	FIBER PB	MSBB	1	4"	PVC-40	-	-	-	#12	-	-	?	4 PR UG CAT 6	
E30A	D 110 A	MSBB	ANTENNA	1	2"	GRS	-	-	-	#12	-	-	1	1/2" COAX	
E30C	D 120 A	MSBB	NETWORK PANEL	1	1"	GRS-PVC	-	-	-	#12	-	-	2	4 PR UG CAT 6	
E21	D 121 A	NETWORK PANEL	J-BOX	1	1-1/2"	PVC-40	-	2	#14	#12	-	-	4	4 PR UG CAT 6	Per City
E21	D 121 B	J-BOX	CAMERA	1	1-1/2"	PVC-40	-	2	#14	#12	-	-	3	4 PR UG CAT 6	Per City
E21	D 121 C	NETWORK PANEL	AREA LIGHT	1	1"	PVC-40	-	2	#14	#12	-	-	1	4 PR UG CAT 6	Per City
E30A	D 122 A	NETWORK PANEL	CAMERA	1	1-1/2"	GRS	-	2	#14	#12	-	-	5	4 PR UG CAT 6	Per City
E30A	D 122 B	CAMERA	CAMERA	1	1"	GRS	-	2	#14	#12	-	-	4	4 PR UG CAT 6	Per City
E30A	D 122 C	CAMERA	CAMERA	1	1"	GRS	-	2	#14	#12	-	-	3	4 PR UG CAT 6	Per City
E30A	D 122 D	NETWORK PANEL	CAMERA	1	1"	GRS	-	2	#14	#12	-	-	4	4 PR UG CAT 6	Per City
E30A	D 122 E	CAMERA	CAMERA	1	1"	GRS	-	2	#14	#12	-	-	2	4 PR UG CAT 6	Per City
E30C	D 200 A	MSBB	FCP	1	1"	GRS-PVC	-	-	-	#12	-	-	2	4 PR UG CAT 6	
E30C	L 107 A	MSBB	EXHAUST FAN	1	1"	PVC-40	20	2	#10	#10	-	-	-	-	EXPOSED GRS-PVC
E30C	L 107 B	EXHAUST FAN	EXHAUST FAN - SWITCH	1	1"	GRS-PVC	20	2	#10	#10	-	-	-	-	
E21	L 109 A	MSBB	AREA LIGHT	1	1"	PVC-40	20	4	#10	#10	-	-	-	-	
E21	L 109 B	AREA LIGHT	AREA LIGHT	1	1"	PVC-40	20	4	#10	#10	-	-	-	-	
E21	L 109 C	MSBB	AREA LIGHT	1	1"	PVC-40	20	4	#10	#10	-	-	-	-	

CONDUIT & WIRE ROUTING SCHEDULE

REF DWG	CONDUIT NO.	FROM	TO	QTY	SIZE	TYPE	OCPD AMP	PWR QTY	PWR SIZE	GND SIZE	CONTROL QTY	CONTROL SIZE	SIGNAL QTY	SIGNAL SIZE	NOTES
E30C	L 112 A	MSBB	P410	1	1"	PVC-40	20	2	#10	#10	-	-	-	-	
E30C	L 114 A	MSBB	P411/2	1	1"	PVC-40	20	4	#10	#10	-	-	-	-	
E30C	L 116 A	P411/2 JB	P420	1	1"	PVC-40	20	2	#10	#10	-	-	-	-	
E30C	L 117 A	MSBB	FCP	1	1"	PVC-40	20	2	#10	#10	-	-	-	-	
E30C	L 118 A	MSBB	P421/2	1	1"	PVC-40	20	2	#10	#10	-	-	-	-	
E21	L 119 A	MSBB	FILTER SV PNL201	1	1"	PVC-40	20	2	#10	#10	-	-	-	-	
E30C	L 120 A	MSBB	P430	1	1"	PVC-40	20	2	#10	#10	-	-	-	-	
E30C	L 122 A	MSBB	P431/2	1	1"	PVC-40	20	2	#10	#10	-	-	-	-	
E21	L 123 A	MSBB	LIT351	1	1"	PVC-40	20	2	#12	#12	-	-	-	-	
E30C	L 124 A	MSBB	AIT281/3	1	1"	PVC-40	20	2	#12	#12	-	-	-	-	
E30C	L 124 B	AIT281/3 JB	AIT282	1	3/4"	GRS	20	2	#12	#12	-	-	-	-	
E21	L 125 A	MSBB	GATE OPENER-WEST	1	1"	PVC-40	20	2	#10	#10	-	-	-	-	
E21	L 127 A	MSBB	GATE OPENER-NORTH	1	1"	PVC-40	20	2	#10	#10	-	-	-	-	
E30C	L 131 A	MSBB	NETWORK PANEL	1	1"	PVC-40	20	2	#10	#10	-	-	-	-	
E30C	L 132 A	MSBB	AC UNIT	1	1"	PVC-40	30	3	#10	#10	-	-	-	-	EXPOSED GRS
E30C	L 138 A	MSBB	AC UNIT	1	1"	PVC-40	30	3	#10	#10	-	-	-	-	EXPOSED GRS
E30C	L 140 A	MSBB	AC UNIT	1	1"	PVC-40	30	3	#10	#10	-	-	-	-	EXPOSED GRS-PVC
E21	P 100 A	MSBA	POWER PB	1	4"	Existing	400	3	#350 kcmil	#2	-	-	-	-	Relable COND
E30C	P 100 A	POWER PB	ATS	1	4"	PVC-40	400	3	#350 kcmil	#2	-	-	-	-	
E30C	P 100 B	ATS	MSBB	1	4"	PVC-40	-	3	#350 kcmil	#2	-	-	-	-	
E30C	P 100 C	ATS	GEN TERM PANEL	1	4"	PVC-40	-	3	#350 kcmil	#2	-	-	-	-	
E21	P 111 A	MSBB	DISC111	1	3"	PVC-40	150	3	#3/0	#3	-	-	-	-	VFD RATED CABLE
E21	P 111 B	DISC111	P111	1	3"	GRS-PVC	-	1	MNFR CBLE	-	-	-	-	-	
E30C	P 301 A	MSBB	P301	1	1"	PVC-40	15MCP	3	#10	#10	4	#14	-	-	
E30C	P 341 A	MSBB	PNL341/ACP341	1	1"	PVC-40	15	3	#10	#10	-	-	-	-	
E21	XC 141 A	MSBB	GATE OPENER-WEST	1	1"	PVC-40	-	-	-	-	-	-	-	-	PULL ROPE
E21	XC 141 B	GATE OPENER-WEST	CARD READER -WEST	1	1"	PVC-40	-	-	-	-	-	-	-	-	PULL ROPE
E21	XC 142 A	MSBB	CARD READER -NORTH	1	1"	PVC-40	-	-	-	-	-	-	-	-	PULL ROPE
E21	XC 142 B	CARD READER -NORTH	GATE OPENER-NORTH	1	1"	PVC-40	-	-	-	-	-	-	-	-	PULL ROPE
E21	XC 142 C	GATE OPENER-NORTH	CAR GATE OPENER-NORTH	1	1"	PVC-40	-	-	-	-	-	-	-	-	PULL ROPE
E21	XD 101	TELCO	TELCO PB	1	4"	Existing	-	-	-	-	-	-	-	-	Relable COND
E30C	XD 101	TELCO PB	NETWORK PANEL	1	4"	PVC-40	-	-	-	-	-	-	-	-	PULL ROPE

LIGHTING AND FIXTURE SCHEDULE

CODE LETTER	FIXTURE TYPE	FINISH	FIXTURE LAMPS	WATTS/ FIXTURE	MANUFACTURER OR APPROVED EQUAL	MOUNTING ARRANGEMENT	NOTES
A	LED LUMINAIRE, 4 FT, CODE-GAUGE STEEL LINEAR-FACETED REFRACTOR W/LIGHT DIFFUSING FILM DESIGNLIGHTS CONSORTIUM QUALIFIED	WHITE	LED 4000 K 82 CRI 120 VAC	50	LITHONIA STL4-48L-D50-LP840	CHAIN HANGER SET 10 FT FROM FLOOR	UL LISTED FOR DAMP LOCATIONS 84 LUMENS
B	NON-METALLIC LUMINAIRE IMPACT RESISTANT POLYCARBONATE LENS SWITCH DISCONNECT POWER WHEN OPEN	GRAY	LED 3000K 120 VAC	64	APPLETON FELED SERIES OR APPROVED EQUAL	CEILING OR WALL SUSPENDED	UL LISTED CLASS 1, DIV 2 RATED
C	SECURITY LIGHT, HEAVY DUTY WEATHERPROOF POWDER COAT FINISH FULL CUTOFF; ONE ENGINE; TYPE II DIST	DARK BRONZE	LED 4000 K MULTI-VOLT	65	LITHONIA WALL LIGHT WSQ	WALL MOUNT ON BUILDING AT 10 FT	WITH PHOTOCELL CONTROL PE (WHERE SHOWN) U.L. LISTED FOR WET LOCATIONS LIGHT SWITCH ON / ENABLE
E1	EMERGENCY LIGHTING IMPACT RESISTANT CONTEMPORARY HOUSING REGULATED CHARGER	WHITE	3W LED 2 EACH 120 VAC	3	LITHONIA QUANTUM LED SERIES ELM2	WALL MOUNTED AT 9 FT	SEALED NICKEL CALCIUM BATTERY TEST SWITCH UL LISTED FOR DAMP ENVIRONMENT
E2	EMERGENCY LIGHT PACK WITH INTEGRAL BATTERY CHARGER NEMA 4X ENCLOSURE	GREY	25 LED 2 EACH	18	MCPHILBEN NX OR APPROVED EQUAL	WALL MOUNT AT 8 FT	EXTERNAL MOUNTING FEET TEST SWITCH NICKEL CADMIUM BATTERIES, 120VAC
T1	AREA LIGHT MULTI-LEVEL MOTION CONTROL SQUARE POLE ARM MOUNTED FIXTURE TYPE 3 DISTRIBUTION	BRONZE	LED 1 EACH 120 VAC	6	GARDCO OPF-S-A02-740-T4W-AR1-UNIV OR MC GRAW-EDISON - GLEON	MOUNT ON POLE PER DWG E12 DET C	U.L. LISTED FOR WET LOCATIONS FUSE IN HAND HOLE PHOTO CELL PE
T2	AREA LIGHT MULTI-LEVEL MOTION CONTROL SQUARE POLE ARM MOUNTED FIXTURE BACKLIGHT CONTROL	BRONZE	LED 1 EACH 120 VAC	6	GARDCO OPF-S-A02-740-BLC-AR1-UNIV OR MC GRAW-EDISON - GLEON	MOUNT ON POLE PER DWG E12 DET C	U.L. LISTED FOR WET LOCATIONS FUSE IN HAND HOLE PHOTO CELL PE
X	EXIT LIGHTING WITH NICAD BATTERY STEEL HOUSING SELF POWERED, GREEN LETTERS	WHITE	LED TYPE 120 VAC	3.8	EMERGI-LITE LWSNX-X14 WG-DDBXD	UNIVERSAL MOUNT	UL LISTED TEST SWITCH

GENERAL NOTES THAT APPLY TO LIGHTING AND RECEPTACLE PLAN

1. PROVIDE AND INSTALL NECESSARY WIRES IN CONCEALED 3/4" (MIN) GRS CONDUIT FOR LIGHTING AND RECEPTACLE ARRANGEMENT AS SHOWN. IF CONDUITS ARE ROUTED UNDERGROUND, THE UNDERGROUND SECTION AND CONCEALED RISER TO FIRST DEVICE BOX BY BE PVC-80, EXPOSED CONDUIT SHALL BE GRS.
2. DEVICE BOXES AND CONDUIT BODIES SHALL BE METALLIC. IN NEMA 4X AREAS, USE MALLEABLE METALLIC BOXES.
3. CONDUCTORS SHALL BE COPPER TYPE THHN, #12 AWG (MINIMUM). CONDUCTORS INSTALLED UNDERGROUND SHALL BE THWN OR OTHERWISE LISTED FOR WET SERVICE
4. MOUNT CONDUITS USING SINGLE BOLT GALVANIZED PIPE STRAPS AND CLAMP BACK SPACERS.
5. USE SS EXPANSION WEDGE ANCHORS OR EPOXY ANCHORS AS NECESSARY FOR EQUIPMENT MOUNTING.
6. PROVIDE AND INSTALL FIXTURES PER SCHEDULE THIS PAGE, QUANTITY AS SHOWN IN DRAWING.
7. PROVIDE AND INSTALL ALL DEVICE BOXES, JUNCTION BOXES, RECEPTACLES, SWITCHES, AND COVERS.
8. RECEPTACLES TO BE GROUND FAULT INTERRUPTER (GFI) TYPE AND WEATHERPROOF (WP) WHERE SHOWN.
9. SEE ELECTRICAL SYMBOLS AND ABBREVIATIONS DRAWING FOR SYMBOL DEFINITION.
10. ALL WORK SHALL CONFORM TO 2022 CALIFORNIA BUILDING CODE (CBC), 2022 CALIFORNIA ELECTRICAL CODE (CEC), 2022 CALIFORNIA ENERGY CODE (CEnC), 2022 CALIFORNIA GREEN BUILDING CODE (CGBC), 2022 CALIFORNIA FIRE CODE (CFC) AND THE 2023 MILPITAS MUNICIPAL CODE (MMC).
11. ALL COMPONENTS INSTALLED IN CHEM ROOM SHALL BE PROTECTED FROM CORROSION, INCLUDING METAL CONDUITS, BOXES, BOLTS, FASTENERS, SWITCHES, RECEPTACLES, ETC.

T.E.E.M.
(916) 457-8144
FILE: 2312G

© NOVEMBER 2024
ATEEM ENGINEERING
ALL RIGHTS RESERVED

WEST YOST
Water. Engineered.
6800 Koll Center Parkway
Suite 150
Pleasanton, CA 94566
(925) 426-2580
FAX (530) 756-5991

Designer Stamp:
REGISTERED PROFESSIONAL ENGINEER — JAMES M. KIMLEY — NO. 19698 — Exp.6-30-2026 — ELECTRICAL — STATE OF CALIFORNIA
2/5/2025

Record Drawings

Designer: _____ Date: _____
Public Works Inspector: _____ Date: _____
Utility/Facility Dept. Head: _____ Date: _____
Project Engineer: _____ Date: _____
Public Improvements Initially Accepted by the City Council on: _____ Res. No. _____

Drawn By: ZK Date: 2/5/2025
Checked By: XL Date: 2/5/2025
Designed By: SK Date: 2/5/2025

Revisions

Num.	Description	Engr. Aprv.	Date
1			

CITY OF MILPITAS — CALIFORNIA — JANUARY 20, 1954

CITY OF MILPITAS
ENGINEERING DIVISION

McCANDLESS WELL FACILITY
PROJECT NO. 7076

LIGHTING FIXTURE SCHEDULE, GENERAL NOTES & CONDUIT SCHEDULE

RECOMMENDED FOR BIDDING BY: Lyhak Eam DATE: 2/7/2025
LYHAK EAM, P.E., Public Works Division Manager – Engineering

DWG NO. E20
PROJECT NO. 7076
Rec. Dwg No.
SCALE:
SHEET 55 OF 70

Z:\ACADDWG\2023\2312g\2312gE020.dwg

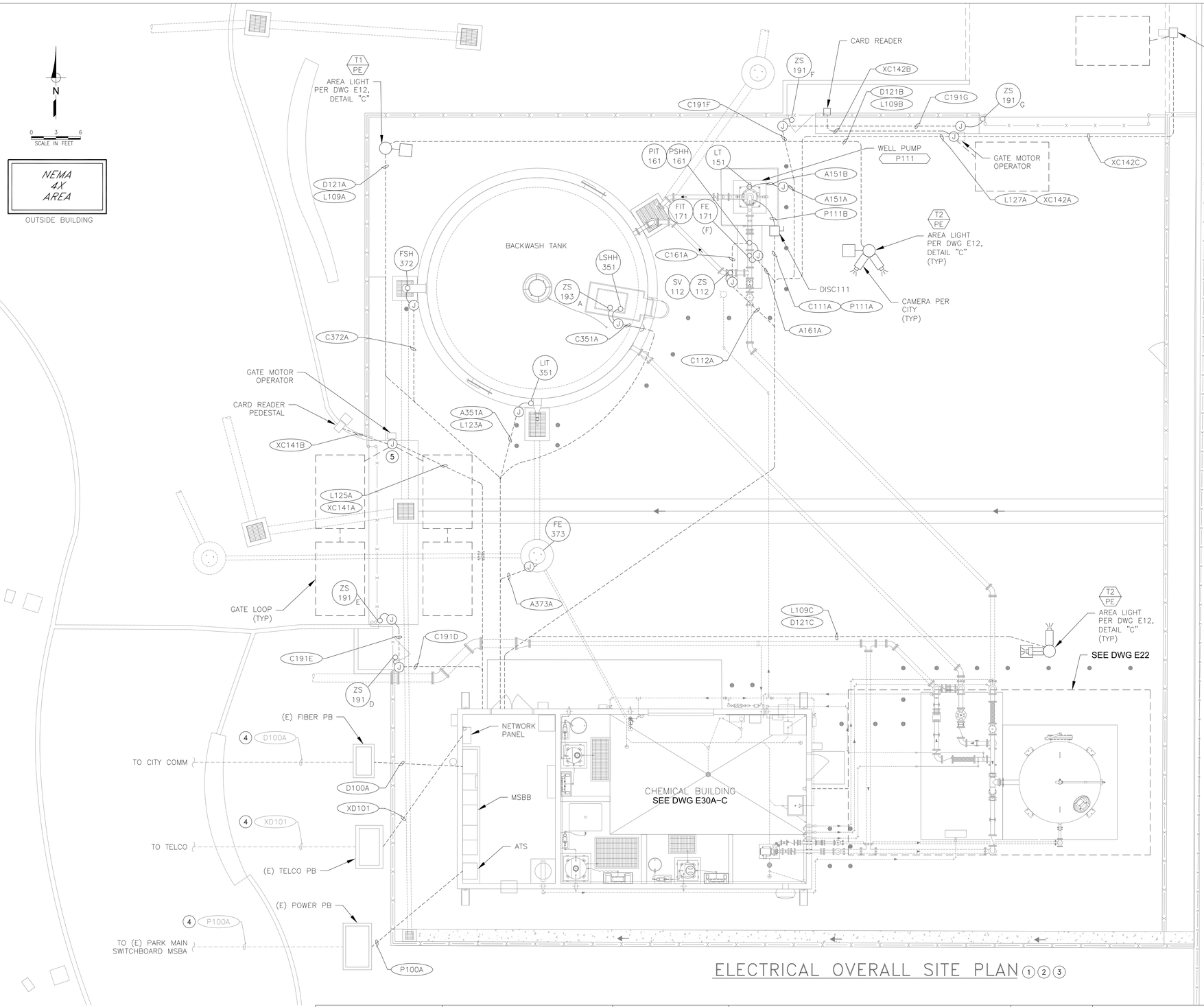

ELECTRICAL OVERALL SITE PLAN (1)(2)(3)

NOTES:
1. UG CONDUITS PER DWG E11, DETAIL "B".
2. EXPOSED CONDUITS TRANSITIONS PER DWG E11, DETAIL "G".
3. ALL J-BOXES SHOWN SHALL BE WEATHERPROOF (WP) TYPE.
4. EXISTING CONDUITS TO BE RE-USED & RELABELED, SEE CONDUIT SCHEDULE FOR DETAILS.
5. LOCATE FINAL CONDUIT STUB OUT PER GATE SUPPLIER'S REQUIREMENTS.

T.E.E.m.
(916) 457-8144
FILE: 2312G
© NOVEMBER 2024
ATEEM ENGINEERING
ALL RIGHTS RESERVED

WEST YOST
Water. Engineered.
6800 Koll Center Parkway
Suite 150
Pleasanton, CA 94566
(925) 426-2580
FAX (530) 756-5991

Designer Stamp: REGISTERED PROFESSIONAL ENGINEER — N. KAMAL KHAIR — NO. 15698 — Exp.6-30-2026 — ELECTRICAL — STATE OF CALIFORNIA
2/5/2025

Record Drawings

Designer: _____ Date: _____
Public Works Inspector: _____ Date: _____
Utility/Facility Dept. Head: _____ Date: _____
Project Engineer: _____ Date: _____
Public Improvements Initially Accepted by the City Council on: _____ Res. No. _____

Drawn By: ZK Date: 2/5/2025
Checked By: XL Date: 2/5/2025
Designed By: SK Date: 2/5/2025

Revisions

Num.	Description	Engr. Aprv.	Date
1			

CITY OF MILPITAS
ENGINEERING DIVISION

McCANDLESS WELL FACILITY
PROJECT NO. 7076

ELECTRICAL OVERALL SITE PLAN

RECOMMENDED FOR BIDDING BY: Lyhak Eam DATE: 2/7/2025
LYHAK EAM, P.E., Public Works Division Manager – Engineering

DWG NO. E21
PROJECT NO. 7076
Rec. Dwg No.
SCALE:
SHEET 56 OF 70

Z:\ACADDWG\2023\2312g\2312gE021.dwg

N

0 1 2
SCALE IN FEET

NEMA 4X AREA

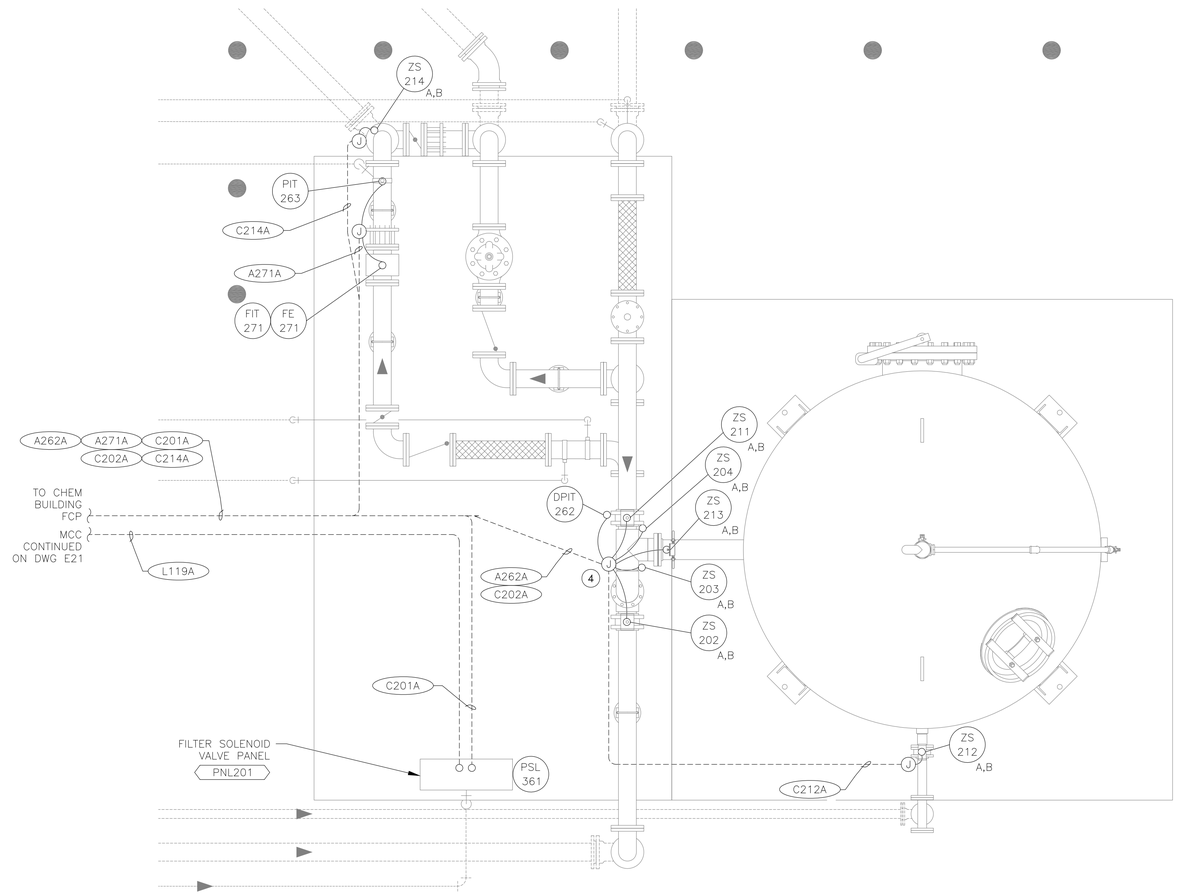

FILTER AREA ELECTRICAL PLAN (1)(2)(3)(5)

NOTES:

(1) UG CONDUITS PER DWG E11, DETAIL "B".

(2) EXPOSED CONDUITS TRANSITIONS PER DWG E11, DETAIL "G".

(3) ALL J-BOXES SHOWN SHALL BE WEATHERPROOF (WP) TYPE.

(4) LOCATE J-BOXES PER VALVES LOCATIONS ON CIVIL DRAWINGS AND PROVIDE ADDITIONAL CONDUITS & J-BOXES AS REQUIRED FOR MAXIMUM 3' FLEX TO DEVICES.

(5) FLEX CONDUIT TO VALVES SHALL BE 36", PROVIDE VERTICAL CONDUIT SUPPORTS AND JUNCTION BOXES AS REQUIRED.

T.E.E.m.
(916) 457-8144
FILE: 2312G

© NOVEMBER 2024
ATEEM ENGINEERING
ALL RIGHTS RESERVED

WEST YOST
Water. Engineered.
6800 Koll Center Parkway
Suite 150
Pleasanton, CA 94566
(925) 426-2580
FAX (530) 756-5991

Designer Stamp:
REGISTERED PROFESSIONAL ENGINEER — N. KIM — NO. 19598 — Exp.6-30-2026 — ELECTRICAL — STATE OF CALIFORNIA
2/5/2025

Record Drawings

Designer: _____ Date: _____
Public Works Inspector: _____ Date: _____
Utility/Facility Dept. Head: _____ Date: _____
Project Engineer: _____ Date: _____
Public Improvements Initially Accepted by the City Council on: _____ Res. No. _____

Drawn By: ZK Date: 2/5/2025
Checked By: XL Date: 2/5/2025
Designed By: SK Date: 2/5/2025

Revisions

Num.	Description	Engr. Aprv.	Date
1			

CITY OF MILPITAS
CALIFORNIA
JANUARY 20, 1954

CITY OF MILPITAS
ENGINEERING DIVISION

McCANDLESS WELL FACILITY
PROJECT NO. 7076

FILTER AREA ELECTRICAL PLAN

RECOMMENDED FOR BIDDING BY: Lyhak Eam DATE: 2/7/2025
LYHAK EAM, P.E., Public Works Division Manager – Engineering

DWG NO. E22
PROJECT NO. 7076
Rec. Dwg No.
SCALE:
SHEET 57 OF 70

Z:\ACADDWG\2023\2312g\2312gE022.dwg

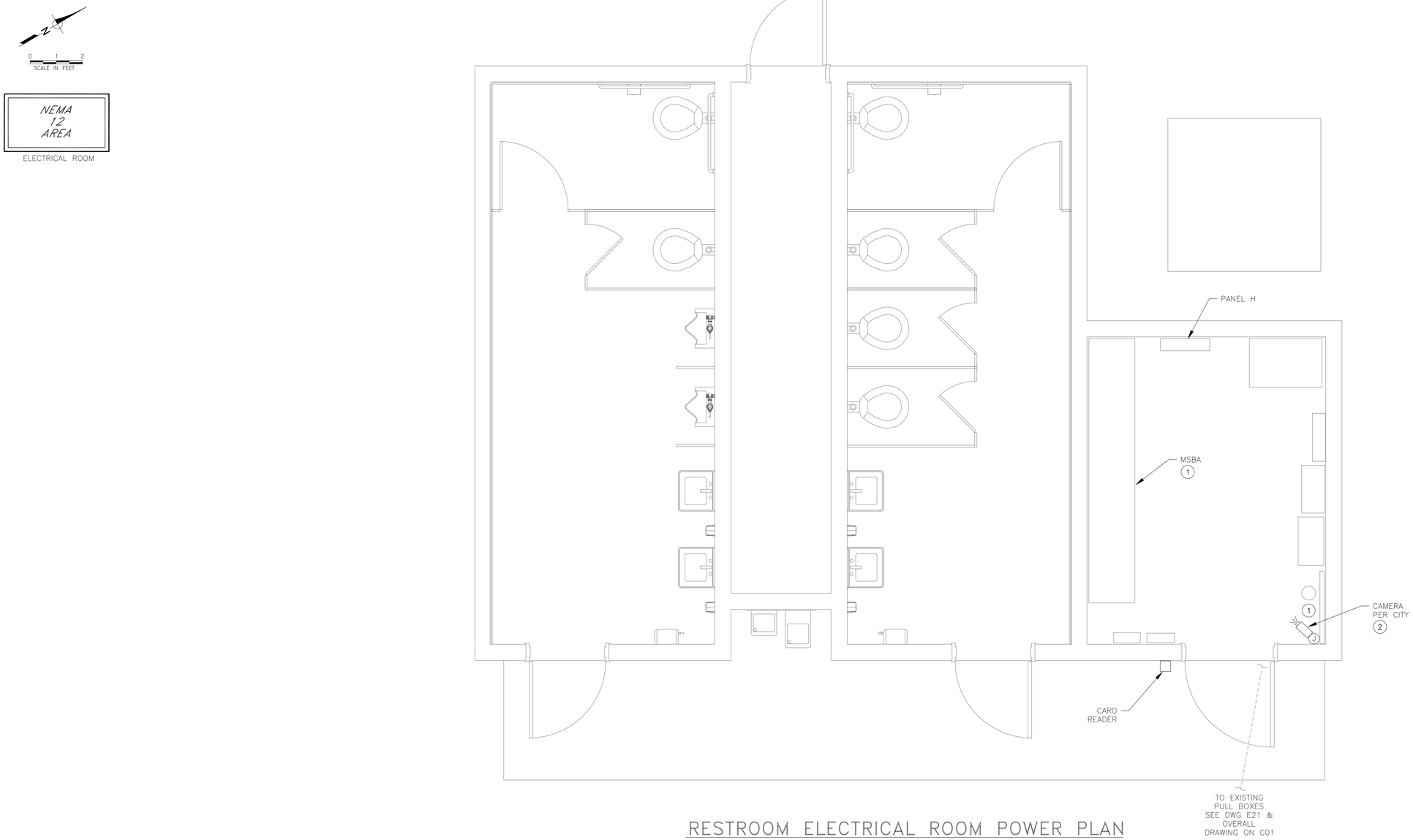

RESTROOM ELECTRICAL ROOM POWER PLAN

NOTES: (1) COORDINATE WITH CITY TO IDENTIFY EXISTING CONDUIT STUB-UP LOCATIONS.

(2) 1" GRS CONDUIT WITH PULL ROPE TO RESTROOM INTERIOR LOCATION DESIGNATED BY OWNER.

T.E.E.m.
(916) 457-8144
FILE: 2312G

© NOVEMBER 2024
ATEEM ENGINEERING
ALL RIGHTS RESERVED

WEST YOST
Water. Engineered.
6800 Koll Center Parkway
Suite 150
Pleasanton, CA 94566
(925) 426-2580
FAX (530) 756-5991

Designer Stamp:

REGISTERED PROFESSIONAL ENGINEER
LYHAK M. KIM EAM
NO. 15698
Exp.6-30-2026
ELECTRICAL
STATE OF CALIFORNIA

2/5/2025

Record Drawings

Designer: _____ Date: _____
Public Works Inspector: _____ Date: _____
Utility/Facility Dept. Head: _____ Date: _____
Project Engineer: _____ Date: _____
Public Improvements Initially Accepted by the City Council on: _____ Res. No. _____

Drawn By: ZK Date: 2/5/2025
Checked By: XL Date: 2/5/2025
Designed By: SK Date: 2/5/2025

Revisions

Num.	Description	Engr. Aprv.	Date
△			

CITY OF MILPITAS
ENGINEERING DIVISION

McCANDLESS WELL FACILITY
PROJECT NO. 7076

RESTROOM ELECTRICAL ROOM POWER PLAN

RECOMMENDED FOR BIDDING BY: Lyhak Eam DATE: 2/7/2025
LYHAK EAM, P.E., Public Works Division Manager – Engineering

DWG NO. E23
PROJECT NO. 7076
Rec. Dwg No.
SCALE:
SHEET 58 OF 70

Z:\ACADDWG\2023\2312g\2312gE023.dwg

N

0 1 2
SCALE IN FEET

NEMA 4X AREA
OUTSIDE BUILDING & CHEM ROOM

NEMA 12 AREA
ELECTRICAL ROOM

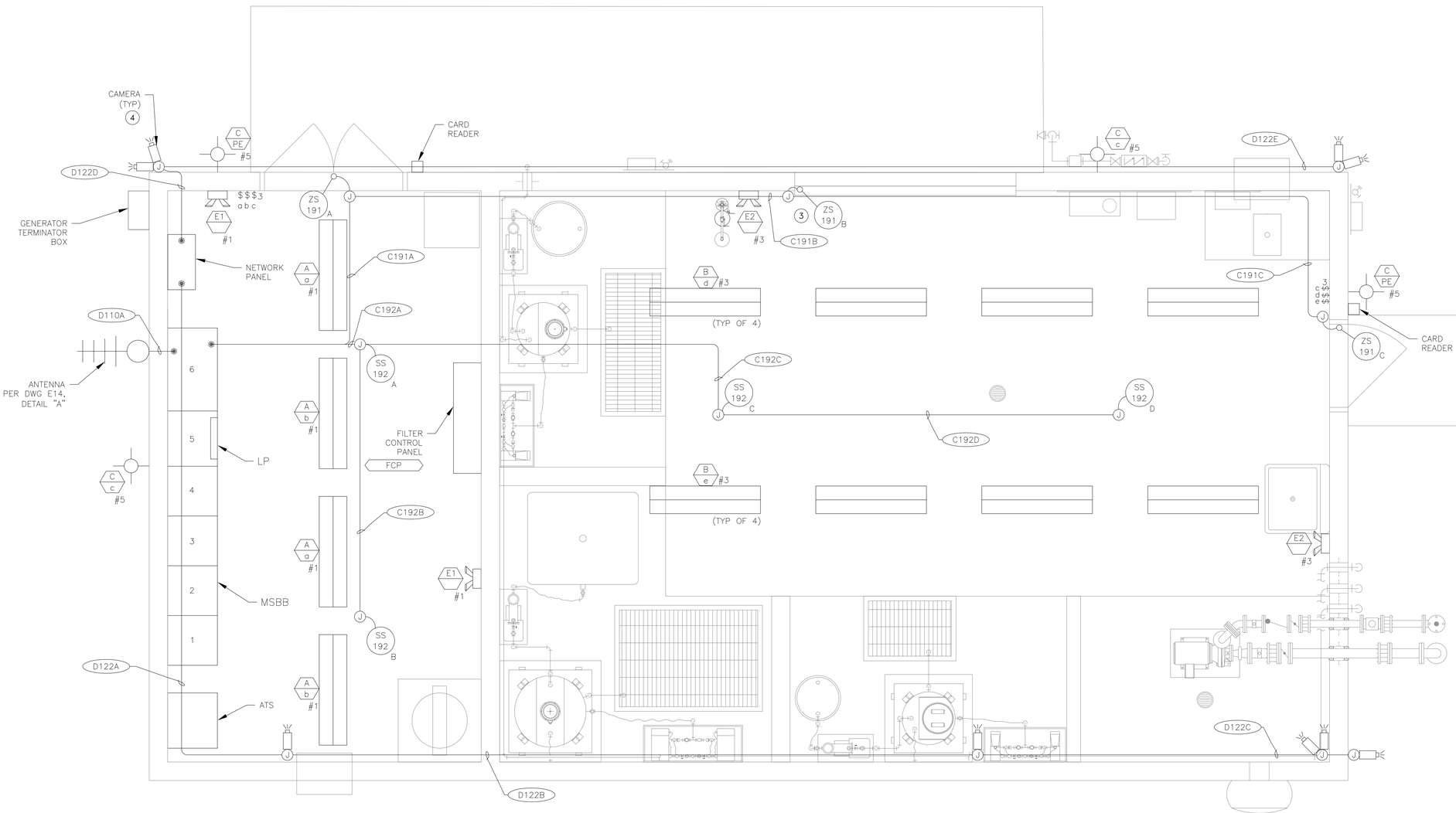

CHEMICAL FEED BUILDING ELECTRICAL REFLECTIVE PLAN (1)(2)

NOTES:

(1) SEE DWG E20 FOR CIRCUIT & WIRE INSTALLATION REQUIREMENTS AND FIXTURE SCHEDULE. CIRCUITS SHOWN ARE FED FROM LIGHTING PANEL LP.

(2) EXPOSED CONDUITS PER DWG E11, DETAIL "A".

(3) LOCATE INTRUSION SWITCH AT BOTTOM OF ROLL-UP DOOR.

(4) INSTALL CAMERA PER CITY'S INSTRUCTIONS.

T.E.E.M.
(916) 457-8144

FILE: 2312G

© NOVEMBER 2024
ATEEM ENGINEERING
ALL RIGHTS RESERVED

WEST YOST
Water. Engineered.
6800 Koll Center Parkway
Suite 150
Pleasanton, CA 94566
(925) 426-2580
FAX (530) 756-5991

Designer Stamp:
REGISTERED PROFESSIONAL ENGINEER — LYHAK M. KHAM — NO. 19598 — Exp.6-30-2026 — ELECTRICAL — STATE OF CALIFORNIA
2/5/2025

Record Drawings

Designer: _____ Date: _____
Public Works Inspector: _____ Date: _____
Utility/Facility Dept. Head: _____ Date: _____
Project Engineer: _____ Date: _____
Public Improvements Initially Accepted by the City Council on: _____ Res. No. _____

Drawn By: ZK Date: 2/5/2025
Checked By: XL Date: 2/5/2025
Designed By: SK Date: 2/5/2025

Revisions

Num.	Description	Engr. Aprv.	Date
1			

CITY OF MILPITAS
ENGINEERING DIVISION

McCANDLESS WELL FACILITY
PROJECT NO. 7076

CHEMICAL FEED BUILDING ELECTRICAL REFLECTIVE PLAN

RECOMMENDED FOR BIDDING BY: Lyhak Eam DATE: 2/7/2025
LYHAK EAM, P.E., Public Works Division Manager – Engineering

DWG NO. E30A
PROJECT NO. 7076
Rec. Dwg No.
SCALE:
SHEET 59 OF 70

Z:\ACADDWG\2023\2312g\2312gE030A.dwg

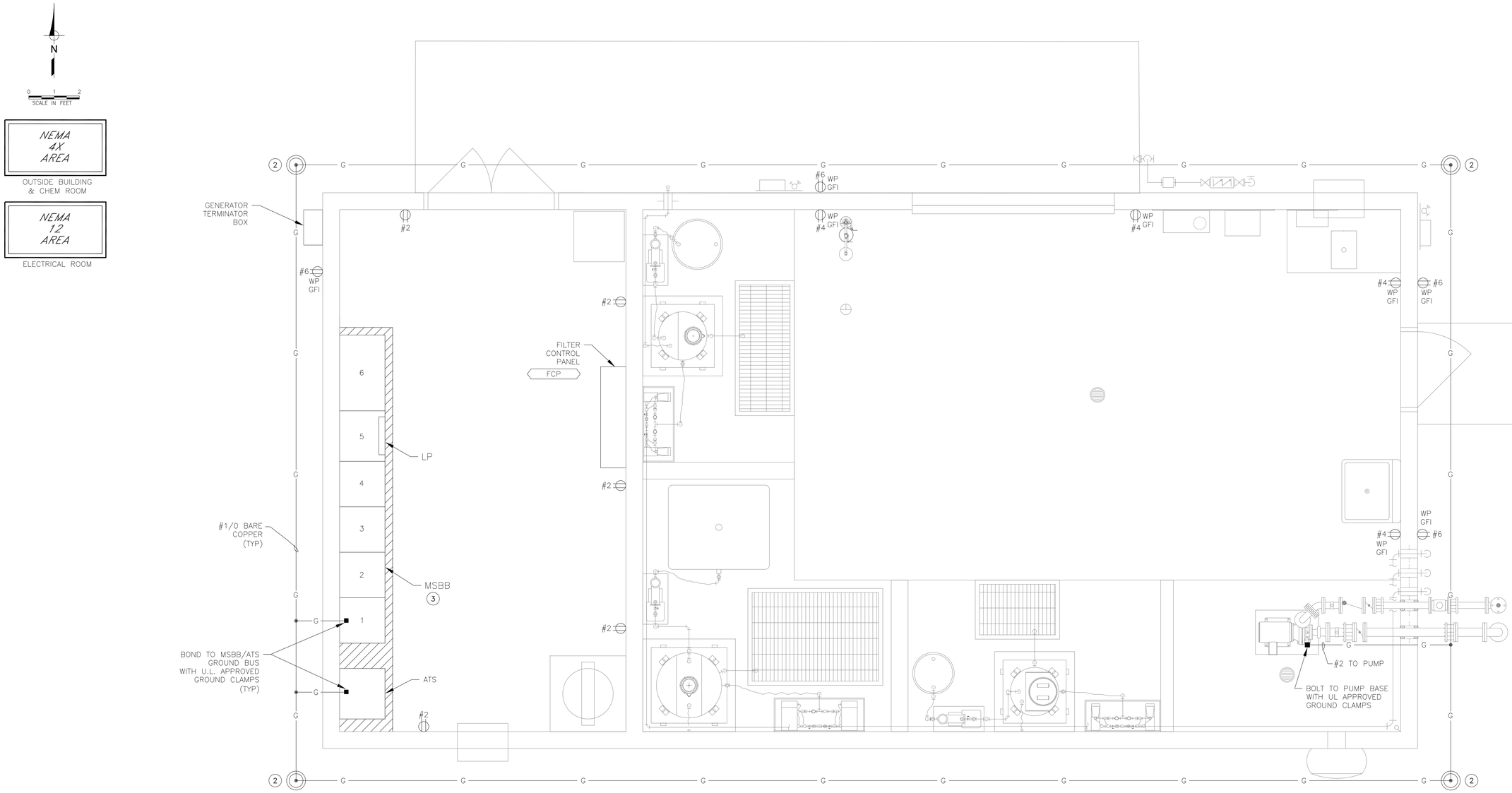

CHEMICAL FEED BUILDING ELECTRICAL BASE PLAN (1)(2)

NOTES:

1. SEE DWG E20 FOR CIRCUIT & WIRE INSTALLATION REQUIREMENTS. CIRCUITS SHOWN ARE FED FROM LIGHTING PANEL LP.
2. GROUND RING & GROUND BONDS TO CONSIST OF #1/0 BARE COPPER WITH 30" MINIMUM COVER. INSTALL GROUND ROD HANDHOLE PER DWG E11, DETAIL "E".
3. HOUSEKEEPING CONCRETE PAD PER DWG E12, DETAIL "A".

T.E.E.m.
(916) 457-8144
FILE: 2312G
© NOVEMBER 2024
ATEEM ENGINEERING
ALL RIGHTS RESERVED

WEST YOST
Water. Engineered.
6800 Koll Center Parkway
Suite 150
Pleasanton, CA 94566
(925) 426-2580
FAX (530) 756-5991

Designer Stamp:
REGISTERED PROFESSIONAL ENGINEER
LYHAK M. KIMYOKAN
NO. 15698
Exp.6-30-2026
ELECTRICAL
STATE OF CALIFORNIA
2/5/2025

Record Drawings

Designer: _____ Date: _____
Public Works Inspector: _____ Date: _____
Utility/Facility Dept. Head: _____ Date: _____
Project Engineer: _____ Date: _____
Public Improvements Initially Accepted by the City Council on: _____ Res. No. _____

Drawn By: ZK Date: 2/5/2025
Checked By: XL Date: 2/5/2025
Designed By: SK Date: 2/5/2025

Revisions

Num.	Description	Engr. Aprv.	Date
△			

CITY OF MILPITAS
CALIFORNIA
JANUARY 26, 1954

CITY OF MILPITAS
ENGINEERING DIVISION

McCANDLESS WELL FACILITY
PROJECT NO. 7076

CHEMICAL FEED BUILDING ELECTRICAL BASE PLAN

RECOMMENDED FOR BIDDING BY: Lyhak Eam DATE: 2/7/2025
LYHAK EAM, P.E., Public Works Division Manager – Engineering

DWG NO. E30B
PROJECT NO. 7076
Rec. Dwg No.
SCALE:
SHEET 60 OF 70

Z:\ACADDWG\2023\2312g\2312gE030B.dwg

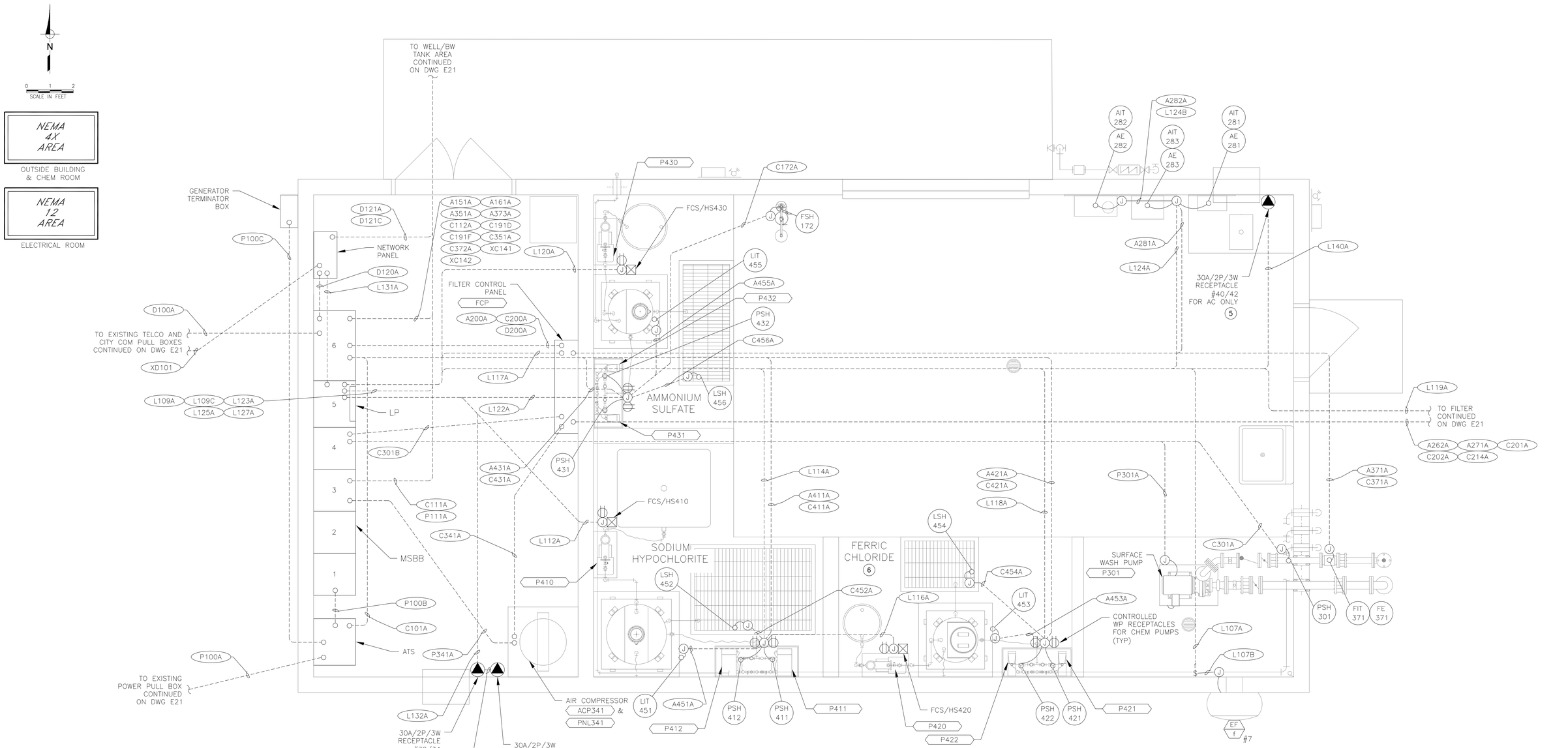

CHEMICAL FEED BUILDING ELECTRICAL POWER PLAN 1 2 3 4

NOTES:

1. UG CONDUITS PER DWG E11, DETAIL "B".
2. EXPOSED CONDUITS TRANSITIONS PER DWG E11, DETAIL "G".
3. ALL J-BOXES SHOWN SHALL BE WEATHERPROOF (WP) TYPE.
4. CONDUITS UNDER BUILDING TO BE PLACED IN CONCRETE SLURRY.
5. MOUNT RECEPTACLE AT 5' ABOVE FLOOR.
6. ELECTRICAL PANELS, CONDUITS, APPURTENANCES, ETC IN THE FERRIC CHLORIDE AREA SHALL BE COMPATIBLE WITH THE CHEMICAL.

T.E.E.m.
(916) 457-8144
FILE: 2312G

© NOVEMBER 2024
ATEEM ENGINEERING
ALL RIGHTS RESERVED

WEST YOST
Water. Engineered.
6800 Koll Center Parkway
Suite 150
Pleasanton, CA 94566
(925) 426-2580
FAX (530) 756-5991

Designer Stamp:

REGISTERED PROFESSIONAL ENGINEER
LYHAK M. KIM, P.E.
NO. 15698
Exp.6-30-2026
ELECTRICAL
STATE OF CALIFORNIA

2/5/2025

Record Drawings

Designer: _____ Date: _____
Public Works Inspector: _____ Date: _____
Utility/Facility Dept. Head: _____ Date: _____
Project Engineer: _____ Date: _____
Public Improvements Initially Accepted by the City Council on: _____ Res. No. _____

Drawn By: ZK Date: 2/5/2025
Checked By: XL Date: 2/5/2025
Designed By: SK Date: 2/5/2025

Revisions

Num.	Description	Engr. Aprv.	Date
△			

CITY OF MILPITAS
ENGINEERING DIVISION

McCANDLESS WELL FACILITY
PROJECT NO. 7076

CHEMICAL FEED BUILDING ELECTRICAL POWER PLAN

RECOMMENDED FOR BIDDING BY: Lyhak Eam DATE: 2/7/2025
LYHAK EAM, P.E., Public Works Division Manager – Engineering

DWG NO. E30C
PROJECT NO. 7076
Rec. Dwg No.
SCALE:
SHEET 61 OF 70

Z:\ACADDWG\2023\2312g\2312gE030C.dwg

STATE OF CALIFORNIA
Indoor Lighting
CALIFORNIA ENERGY COMMISSION

CERTIFICATE OF COMPLIANCE		NRCC-LTI-E
Project Name: McCandless Well Facility	**Report Page:**	**(Page 1 of 8)**
Project Address: 1650 McCandless Drive	**Date Prepared:**	8/21/2024

This document is used to demonstrate compliance with requirements in 110.5, 110.12(c), 130.0, 130.1, 140.6 and 141.0(b)2 for indoor lighting scopes using the prescriptive path for nonresidential and hotel/motel occupancies. It is also used to document compliance with requirements in 160.5, 170.2(e) and 180.2(b)4 for indoor lighting scopes using the prescriptive path for multifamily occupancies. Multifamily includes dormitory and senior living facilities.

A. GENERAL INFORMATION

01	Project Location (city)	Milpitas	04	Total Conditioned Floor Area (ft²)	952
02	Climate Zone	4	05	Total Unconditioned Floor Area (ft²)	0
03	Occupancy Types Within Project (select all that apply):		06	# of Stories (Habitable Above Grade)	1
• Commercial Industrial					

B. PROJECT SCOPE

This table includes any lighting systems that are within the scope of the permit application and are demonstrating compliance using the prescriptive path outlined in 140.6 / 170.2(e) or 141.0(b)2 / 180.2(b)4 for alterations.

Scope of Work	Conditioned Spaces		Unconditioned Spaces	
01	02	03	04	05
My Project Consists of (check all that apply):	Calculation Method	Area (ft²)	Calculation Method	Area (ft²)
☐ New Lighting System				
☐ New Lighting System - Parking Garage				
☒ Altered Lighting System	Area Category Method	952	Area Category Method	0
Total Area of Work (ft²)	952		0	

STATE OF CALIFORNIA
Indoor Lighting
CALIFORNIA ENERGY COMMISSION

CERTIFICATE OF COMPLIANCE		NRCC-LTI-E
Project Name: McCandless Well Facility	**Report Page:**	**(Page 2 of 8)**
	Date Prepared:	8/21/2024

C. COMPLIANCE RESULTS

If any cell on this table says "DOES NOT COMPLY" or "COMPLIES with Exceptional Conditions" refer to Table D. for guidance.

Lighting in conditioned and unconditioned spaces must not be combined for compliance per 140.6(b)1 / 170.2(e)	Allowed Lighting Power per 140.6(b) / 170.2(e) (Watts)						Adjusted Lighting Power per 140.6(a) / 170.2(e) (Watts)						Compliance Results
	01	02	03	04		05	06	07		08			09
	Complete Building 140.6(c)1	Area Category 140.6(c)2 / 170.2(e)4	Area Category Additional 140.6(c)2G / 170.2(e)4Av (+)	Tailored 140.6(c)3 / 170.2(e)4B (+)	=	**Total Allowed** (Watts)	≥ Total Designed (Watts)	Adjustments PAF Lighting Control Credits 140.6(a)2 / 170.2(e)1B (-)	=	**Total Adjusted** (Watts) *Includes Adjustments			**05 must be >= 08 140.6 / 170.2(e)**
	(See Table I)	(See Table I)	(See Table J)	(See Table K)			(See Table F)	(See Table P)					
Conditioned		571.2	190		=	762	≥ 712	0	=	712			COMPLIES
Unconditioned					=		≥		=				
Controls Compliance (See Table H for Details)													COMPLIES
Rated Power Reduction Compliance (See Table Q for Details)													

D. EXCEPTIONAL CONDITIONS

This table is auto-filled with uneditable comments because of selections made or data entered in tables throughout the form.

E. ADDITIONAL REMARKS

This table includes remarks made by the permit applicant to the Authority Having Jurisdiction.

STATE OF CALIFORNIA
Indoor Lighting
CALIFORNIA ENERGY COMMISSION

CERTIFICATE OF COMPLIANCE		NRCC-LTI-E
Project Name: McCandless Well Facility	**Report Page:**	**(Page 3 of 8)**
	Date Prepared:	8/21/2024

F. INDOOR LIGHTING FIXTURE SCHEDULE

This table includes all planned permanent and portable lighting other than dwelling unit/ hotel/ motel room lighting. Multifamily dwelling unit and hotel/motel room lighting is documented in Table T. If using Table T to document lighting in multifamily common use areas providing shared provisions for living, eating, cooking or sanitation, those luminaires are not included here.

Designed Wattage: Conditioned Spaces

01	02	03	04	05	06	07	08	09	10	
Name or Item Tag	Complete Luminaire Description	Modular (Track) Fixture	Small Aperture & Color Change[1]	Watts per luminaire[2]	How is Wattage determined	Total Number of Luminaires	Excluded per 140.6(a)3 / 170.2(e)2C	Design Watts	Field Inspector	
									Pass	Fail
A	A - 4' LED Luminaire	No	NA	50	Mfr. Spec	4	No	200	☐	☐
B	B - 4' LED Luminaire	No	NA	64	Mfr. Spec	8	No	512	☐	☐
Total Designed Watts: CONDITIONED SPACES								712		

[1]*FOOTNOTE: Design Watts for small aperture and color changing luminaires which qualify per 140.6(a)4B / 170.2(e)2D is adjusted to be 75% /80% of their rated wattage. Table F automatically makes this adjustment, the permit applicant should enter full rated wattage in column 05.*

[2]*Authority Having Jurisdiction may ask for Luminaire cut sheets to confirm wattage used for compliance per 130.0(c) / 160.5(b). Wattage used must be the maximum rated for the luminaire, not the lamp.*

G. MODULAR LIGHTING SYSTEMS

This section does not apply to this project.

H. INDOOR LIGHTING CONTROLS (Not including PAFs)

This table includes lighting controls for conditioned and unconditioned spaces.

Building Level Controls

01	02	03	
		Field Inspector	
		Pass	Fail
Mandatory Demand Response 110.12(c)	Shut-off controls 130.1(c) / 160.5(b)4C		
Required >= 4,000W subject to multilevel	Whole Building Auto Time Switch	☐	☐

STATE OF CALIFORNIA
Indoor Lighting
CALIFORNIA ENERGY COMMISSION

CERTIFICATE OF COMPLIANCE		NRCC-LTI-E
Project Name: McCandless Well Facility	**Report Page:**	**(Page 4 of 8)**
	Date Prepared:	8/21/2024

H. INDOOR LIGHTING CONTROLS (Not including PAFs)

Area Level Controls

04	05	06	07	08	09	10	11	12	
Area Description	Complete Building or Area Category Primary Function Area	Manual Area Controls 130.1(a) / 160.5(b)4A	Multi-Level Controls 130.1(b) / 160.5(b)4B	Shut-Off Controls 130.1(c) // 160.5(b)4C	Primary/Skylit Daylighting 130.1(d) / 160.5(b)4D	Secondary Daylighting 130.1(d) / 160.5(b)4D	Interlocked Systems 140.6(a)1/ 170.2(e)2A	Field Inspector	
								Pass	Fail
Whole Building	All Other Space Types	Readily Accessible	Dimmer	See Building Level	Included	Included	No	☐	☐
								13	
								Plan Sheet Showing Daylit Zones:	

I. LIGHTING POWER ALLOWANCE: COMPLETE BUILDING OR AREA CATEGORY METHODS

Each area complying using the Complete Building or Area Category Methods per 140.6(b) are included in this table. Column 06 indicates if additional lighting power allowances per 140.6(c) or adjustments per 140.6(a) are being used .

Conditioned Spaces

01	02	03	04	05	06	
Area Description	Complete Building or Area Category Primary Function Area	Allowed Density (W/ft²)	Area (ft²)	Allowed Wattage (Watts)	Additional Allowance / Adjustment	
					Area Category	PAF
Chemical Feed Building	General Commercial Industrial Work AreaLow Bay	0.6	952	571.2	Yes	No
		TOTALS:	952	571.2	See Tables J, or P for detail	

STATE OF CALIFORNIA
Indoor Lighting
CALIFORNIA ENERGY COMMISSION

CERTIFICATE OF COMPLIANCE		NRCC-LTI-E
Project Name: McCandless Well Facility	**Report Page:**	**(Page 5 of 8)**
	Date Prepared:	8/21/2024

J. ADDITIONAL ALLOWANCE: AREA CATEGORY METHOD QUALIFYING LIGHTING SYSTEM

All areas indicated in Table I as using an additional allowance using the Area Category Method have been included in this table to calculate the additional allowance per Table 140.6-C /170.2-M

Conditioned Spaces

01	02	03	04	05	06	07	08	09	10
Area Description	Primary Function Area	Applicable Qualifying Lighting System from Table 140.6-C	Allowed Density (W/ft² or W/lf or W/unit)	Ltg Area, Length or ATM/Mirror (ft², lf or #)	Extra Allowance (Watts)	Luminaire Name or Item Tag	Watts per Luminaire	Number of Luminaires	Total Design Watts
Chemical Feed Building	General Commercial Industrial Work AreaLow Bay	DetailedTaskA	0.2	952	190.4	B	64	8	512
						A	50	4	200
Total Design Watts	Calculated Allowance (Watts):	Total Additional Allowance for this area:							
712	190.4	190.4							
		11							
Total Additional Allowance (Watts) CONDITIONED SPACES		190							

K. TAILORED METHOD GENERAL LIGHTING POWER ALLOWANCE

This section does not apply to this project.

L. ADDITIONAL LIGHTING ALLOWANCE: TAILORED WALL DISPLAY

This section does not apply to this project.

M. ADDITIONAL LIGHTING ALLOWANCE: TAILORED FLOOR AND TASK LIGHTING

This section does not apply to this project.

STATE OF CALIFORNIA
Indoor Lighting
CALIFORNIA ENERGY COMMISSION

CERTIFICATE OF COMPLIANCE		NRCC-LTI-E
Project Name: McCandless Well Facility	**Report Page:**	**(Page 6 of 8)**
	Date Prepared:	8/21/2024

N. ADDITIONAL LIGHTING ALLOWANCE: TAILORED DECORATIVE /SPECIAL EFFECTS

This section does not apply to this project.

O. ADDITIONAL LIGHTING ALLOWANCE: TAILORED VERY VALUABLE MERCHANDISE

This section does not apply to this project.

P. POWER ADJUSTMENT: LIGHTING CONTROL CREDIT (POWER ADJUSTMENT FACTOR (PAF))

This section does not apply to this project.

Q. RATED POWER REDUCTION COMPLIANCE FOR ONE-FOR-ONE ALTERATIONS

This section does not apply to this project.

R. 80% LIGHTING POWER FOR ALL ALTERATIONS - CONTROLS EXCEPTIONS

This section does not apply to this project.

S. DAYLIGHT DESIGN POWER ADJUSTMENT FACTOR (PAF)

This section does not apply to this project.

T. DWELLING UNIT LIGHTING

This section does not apply to this project.

STATE OF CALIFORNIA
Indoor Lighting
CALIFORNIA ENERGY COMMISSION

CERTIFICATE OF COMPLIANCE		NRCC-LTI-E
Project Name: McCandless Well Facility	**Report Page:**	**(Page 7 of 8)**
	Date Prepared:	8/21/2024

U. DECLARATION OF REQUIRED CERTIFICATES OF INSTALLATION

Selections have been made based on information provided in this document. If any selections have been changed by permit applicant, an explanation should be included in Table E. Additional Remarks. These documents must be provided to the building inspector during construction and can be found online

Form/Title
NRCI-LTI-E - Must be submitted for all buildings

V. DECLARATION OF REQUIRED CERTIFICATES OF ACCEPTANCE

There are no NRCA forms required for this project.

STATE OF CALIFORNIA
Indoor Lighting
CALIFORNIA ENERGY COMMISSION

CERTIFICATE OF COMPLIANCE		NRCC-LTI-E
Project Name: McCandless Well Facility	**Report Page:**	**(Page 8 of 8)**
Project Address: 1650 McCandless Drive	**Date Prepared:**	8/21/2024

DOCUMENTATION AUTHOR'S DECLARATION STATEMENT

I certify that this Certificate of Compliance documentation is accurate and complete.

Documentation Author Name: Michael P. McDermott	Documentation Author Signature:
Company: Valley Energy Consultants	Signature Date: 2024-08-21
Address: 2201 Francisco Drive, Suite 140-451	CEA/ HERS Certification Identification (if applicable): R19-09-30140 | NR19-09-30045
City/State/Zip: El Dorado Hills CA 95762	Phone: (916) 933-5791

RESPONSIBLE PERSON'S DECLARATION STATEMENT

I certify the following under penalty of perjury, under the laws of the State of California:

1. The information provided on this Certificate of Compliance is true and correct.
2. I am eligible under Division 3 of the Business and Professions Code to accept responsibility for the building design or system design identified on this Certificate of Compliance (responsible designer)
3. The energy features and performance specifications, materials, components, and manufactured devices for the building design or system design identified on this Certificate of Compliance conform to the requirements of Title 24, Part 1 and Part 6 of the California Code of Regulations.
4. The building design features or system design features identified on this Certificate of Compliance are consistent with the information provided on other applicable compliance documents, worksheets, calculations, plans and specifications submitted to the enforcement agency for approval with this building permit application.
5. I will ensure that a completed signed copy of this Certificate of Compliance shall be made available with the building permit(s) issued for the building, and made available to the enforcement agency for all applicable inspections. I understand that a completed signed copy of this Certificate of Compliance is required to be included with the documentation the builder provides to the building owner at occupancy.

Responsible Designer Name: Sharon M. Kimizuka, P.E.	Responsible Designer Signature:
Company: A TEEM Electrical Engineering, Inc.	Date Signed: 2024-08-21
Address: 3841 N. Freeway Blvd, Suite 145	License: E 15698
City/State/Zip: Milpitas CA 95834	Phone: (916) 457-8144

Valley Energy Consultants
2201 Francisco Drive
Suite 140-451
El Dorado Hills, CA 95762
Phone: (916) 933-5791 Fax: (916) 939-0125
www.TheMcDermottGroup.com

CEA STAMP:
CALIFORNIA ENERGY COMMISSION CEA ENERGY ANALYST
Michael McDermott
R19-09-30140 NR19-09-30045

T.E.E.M.
(916) 457-8144
FILE: 2312G

© NOVEMBER 2024
ATEEM ENGINEERING
ALL RIGHTS RESERVED

WEST YOST
Water. Engineered.
6800 Koll Center Parkway
Suite 150
Pleasanton, CA 94566
(925) 426-2580
FAX (530) 756-5991

Designer Stamp:
REGISTERED PROFESSIONAL ENGINEER SHARON M. KIMIZUKA NO. 15698 Exp.6-30-2026 ELECTRICAL STATE OF CALIFORNIA

Record Drawings

Designer: _____ Date: _____
Public Works Inspector: _____ Date: _____
Utility/Facility Dept. Head: _____ Date: _____
Project Engineer: _____ Date: _____
Public Improvements Initially Accepted by the City Council on: _____ Res. No. _____

Drawn By: ZK Date: 12/5/2024
Checked By: XL Date: 12/5/2024
Designed By: SK Date: 12/5/2024

Revisions

Num.	Description	Engr. Aprv.	Date

CITY OF MILPITAS
ENGINEERING DIVISION

McCANDLESS WELL FACILITY
PROJECT NO. 7076

TITLE 24 ENERGY INDOOR LIGHTING

RECOMMENDED FOR BIDDING BY: Lyhak Eam DATE: 2/7/2025
LYHAK EAM, P.E., Public Works Division Manager – Engineering

DWG NO. ET41
PROJECT NO. 7076
Rec. Dwg No.
SCALE:
SHEET 62 OF 70

Z:\ACADDWG\2023\2312g\2312gET041.dwg

STATE OF CALIFORNIA
Outdoor Lighting
CALIFORNIA ENERGY COMMISSION

CERTIFICATE OF COMPLIANCE		NRCC-LTO-E
Project Name: McCandless Well Facility	Report Page:	(Page 1 of 7)
Project Address: 1650 McCandless Drive	Date Prepared:	8/21/2024

This document is used to demonstrate compliance with requirements in 110.9, 130.0, 130.2, 140.7, and 141.0(b)2I, for outdoor lighting scopes using the prescriptive path for nonresidential and hotel/motel occupancies. It is also used to document compliance with requirements in 160.5, 170.2(e)6, 180.1(a) and 180.2(b)4Bv for outdoor lighting scopes using the prescriptive path for multifamily and mixed-use occupancies. Multifamily includes dormitory and senior living facilities.

A. GENERAL INFORMATION

01	Project location (city)	Milpitas	04	Total Illuminated Hardscape Area (ft²)	6672
02	Climate Zone	4			
03	Outdoor Lighting Zone per Title 24 Part 1	10.114 or as designated by Authority Having Jurisdiction (AHJ):			
☐	LZ-0: Very Low - Undeveloped Parkland	☒ LZ-2: Moderate - Urban Clusters	☐ LZ-4: High - Must be reviewed by CA Energy Commission for Approval		
☐	LZ-1: Low - Rural Areas	☐ LZ-3: Moderately High - Urban Areas			
05	Occupancy Types within Project				
• Commercial Industrial					

B. PROJECT SCOPE

This table includes outdoor lighting systems that are within the scope of the permit application and are demonstrating compliance using the prescriptive path outlined in 140.7 / 170.2(e)6 or 141.0(b)2L / 180.2(b)4Bv for alterations.

My Project Consists of:

01	02	
☐ New Lighting System	Must Comply with Allowances from 140.7 / 170.2(e)6	
☒ Altered Lighting System	Is your alteration increasing the connected lighting load (Watts)?	● Yes ○ No
03	04	05
% of Existing Luminaires Being Altered[1]	Sum Total of Luminaires Being Added or Altered	Calculation Method
☐ < 10% ☐ >= 10% and < 50% ☐ >= 50%	0	

Please proceed to Table F. Outdoor Lighting Fixture Schedule to define the project's luminaires.

[1] *FOOTNOTES: % of Existing Luminaires Being Altered = (Sum Total of Luminaires Being Added or Altered / Existing Luminaires within the Scope of the Permit Application) x 100.*

STATE OF CALIFORNIA
Outdoor Lighting
CALIFORNIA ENERGY COMMISSION

CERTIFICATE OF COMPLIANCE		NRCC-LTO-E
Project Name: McCandless Well Facility	Report Page:	(Page 2 of 7)
	Date Prepared:	8/21/2024

C. COMPLIANCE RESULTS

Results in this table are automatically calculated from data input and calculations in Tables F through N. Note: if any cell on this table says "COMPLIES with Exceptional Conditions" refer to Table D. Exceptional Conditions for guidance or see applicable Table referenced below.

Calculations of Total Allowed Lighting Power (Watts) 140.7 / 170.2(e)6 or 141.0(b)2L / 180.2(b)4Bv											Compliance Results		
01		02		03		04		05		06	07		08	09
General Hardscape Allowance 140.7/d1 / 170.2(e)6 (See Table I)	+	Per Application 140.7(d)2 / 170.2(e)6 (See Table J)	+	Sales Frontage 140.7(d)2 (See Table K)	+	Ornamental 140.7(d)1 / 170.2(e)6 (See Table L)	+	Per Specific Area 140.7(d)2 / 170.2(e)6 (See Table M)	OR	Existing Power Allowance 141.0(b)2L / 180.2(b)4Bv (See Table N)	= Total Allowed (Watts)	≥	Total Actual (Watts)	07 must be >= 08
381	+	---	+	---	+	---	+	---	OR	---	= 381	≥	278	COMPLIES
Shielding Compliance (See Table G for Details)														N/A
Controls Compliance (See Table H for Details)														Not applicable

D. EXCEPTIONAL CONDITIONS

This table is auto-filled with uneditable comments because of selections made or data entered in tables throughout the form.

E. ADDITIONAL REMARKS

This table includes remarks made by the permit applicant to the Authority Having Jurisdiction.

Generated Date/Time:
Documentation Software: EnergyPro
CA Building Energy Efficiency Standards - 2022 Nonresidential Compliance
Report Version: 2022.0.000
Schema Version: rev 20220101
Compliance ID: EnergyPro-2531-0824-0221
Report Generated: 2024-08-21 19:47:11

STATE OF CALIFORNIA
Outdoor Lighting
CALIFORNIA ENERGY COMMISSION

CERTIFICATE OF COMPLIANCE		NRCC-LTO-E
Project Name: McCandless Well Facility	Report Page:	(Page 3 of 7)
	Date Prepared:	8/21/2024

F. OUTDOOR LIGHTING FIXTURE SCHEDULE

For new or altered lighting systems demonstrating compliance with 140.7 / 170.2(e)6 all new luminaires being installed and any existing luminaires remaining or being moved within the spaces covered by the permit application are included in the Table below. For altered lighting systems using the Existing Power method per 141.0(b)2L only new luminaires being installed and replacement luminaires being installed as part of the project scope are included (ie, existing luminaires remaining or existing luminaires being moved are not included). Outdoor lighting attached to multifamily buildings and controlled from the inside of a dwelling unit are included in Table H. and are not included here. All other multifamily outdoor lighting is included here.

Designed Wattage:

01	02		03	04	05	06	07	08	09	10	
Name or Item Tag	Complete Luminaire Description		Watts per luminaire[1, 2]	How is Wattage determined	Total Number Luminaires[2]	Luminaire Status[3]	Excluded per 140.7(a) / 170.2(e)6A	Design Watts	Cutoff Req. > 6,200 initial lumen output 130.2(b) / 160.5(c)1[4]	Field Inspector	
										Pass	Fail
C	C - Security Light LED	☐ Linear	65	Mfr. Spec	4	New	☐	260	NA: < 6200 lumens	☐	☐
T1	T1 - Area Light	☐ Linear	6	Mfr. Spec	1	New	☐	6	NA: < 6200 lumens	☐	☐
T2	T2 - Area Light	☐ Linear	6	Mfr. Spec	2	New	☐	12	NA: < 6200 lumens	☐	☐
							Total Design Watts:	278			

* NOTES: Selections with a * require a note in the space below explaining how compliance is achieved.
EX: Luminaire is lighting a statue; EXCEPTION 2 to 130.2(b)

[1] *FOOTNOTES: Authority Having Jurisdiction may ask for Luminaire cut sheets to confirm wattage used for compliance per 130.0(c) / 160.5(b)*
[2] *For linear luminaires, wattage should be indicated as W/ft instead of Watts/luminaire. Total linear feet should be indicated in column 05 instead of number of luminaires.*
[3] *Select "New" for new luminaires in a new outdoor lighting project, or for added luminaires in an alteration. Select "Altered" for replacement luminaires in an alteration. Select "Existing to Remain" for existing luminaires within the project scope that are not being altered and are remaining. Select "Existing Reinstalled" for existing luminaires which are being removed and reinstalled as part of the project scope.*
[4] *Compliance with mandatory shielding requirements is required for luminaires with initial lumen output >= 6,200 unless exempted by 130.2(b)/ 160.5(c)*

G. SHIELDING REQUIREMENTS (BUG)

This section does not apply to this project.

Generated Date/Time:
Documentation Software: EnergyPro
CA Building Energy Efficiency Standards - 2022 Nonresidential Compliance
Report Version: 2022.0.000
Schema Version: rev 20220101
Compliance ID: EnergyPro-2531-0824-0221
Report Generated: 2024-08-21 19:47:11

STATE OF CALIFORNIA
Outdoor Lighting
CALIFORNIA ENERGY COMMISSION

CERTIFICATE OF COMPLIANCE		NRCC-LTO-E
Project Name: McCandless Well Facility	Report Page:	(Page 4 of 7)
	Date Prepared:	8/21/2024

H. OUTDOOR LIGHTING CONTROLS

This table demonstrates compliance with controls requirements for all new or altered luminaires installed as part of the permit application. For alteration projects, luminaires which are existing to remain (ie untouched) and luminaires which are removed and reinstalled (wiring only) do not need to be included in this table even if they are within the spaces covered by the permit application.
Outdoor lighting for nonresidential buildings, parking garages and common service areas in multifamily buildings must be documented separately from outdoor lighting attached to multifamily buildings and controlled from the inside of a dwelling unit

Mandatory Controls for Nonresidential Occupancies, Parking Garages & Common Areas in Multifamily Buildings

01	02	03	04	05	
Area Description	Shut-Off 130.2(c)1 / 160.5(c)	Auto-Schedule 130.2(c)2 / 160.5(c)	Motion Sensor 130.2(c)3 / 160.5(c)	Field Inspector	
				Pass	Fail

[1] *FOOTNOTE: Text has been abbreviated, please refer to Table 160.5-A to confirm compliance with the specific light source technologies listed.*
[2] *Authority having jurisdiction may ask for cutsheets or other documentation to confirm compliance of light source.*
[3] *Recessed luminaires marked for use in fire-rated installations, and recessed luminaires installed in non-insulated ceilings are excepted from ii and iii.*

Generated Date/Time:
Documentation Software: EnergyPro
CA Building Energy Efficiency Standards - 2022 Nonresidential Compliance
Report Version: 2022.0.000
Schema Version: rev 20220101
Compliance ID: EnergyPro-2531-0824-0221
Report Generated: 2024-08-21 19:47:11

STATE OF CALIFORNIA
Outdoor Lighting
CALIFORNIA ENERGY COMMISSION

CERTIFICATE OF COMPLIANCE		NRCC-LTO-E
Project Name: McCandless Well Facility	Report Page:	(Page 5 of 7)
	Date Prepared:	8/21/2024

I. LIGHTING POWER ALLOWANCE (per 140.7 / 170.2(e))

This table includes areas using allowance calculations per 140.7 / 170.2(e). General Hardscape Allowance is per Table 140.7-A/Table 170.2-A while "Use it or lose it" Allowances are per Table 140.7-B /Table 170.2-S. indicate which allowances are being used to expand sections for user input. Luminaires that qualify for one of the "Use it or lose it" allowances shall not qualify for another "Use it or lose it" allowance.
Outdoor lighting attached to multifamily buildings and controlled from the inside of a dwelling unit are included in Tbie H. and are not included here. All other multifamily outdoor lighting is included here.

	01				
	"Use it or lose it" Allowance (select all that apply) (select all that apply)				
☒ General Hardscape Allowance Table I (below)	☐ Per Application Table J	☐ Sales Frontage Table K	☐ Ornamental Table L	☐ Per Specific Area Table M	

Calculated General Hardscape Lighting Power Allowance per Table 140.7-A for Nonresidential & Hotel/Motel

02	03	04	05	06	07	08	09
	Area Wattage Allowance (AWA)			Linear Wattage Allowance (LWA)			
Area Description	Illuminated Area (ft²)	Allowed Density (W/ft²)	Area Allowance (Watts)	Perimeter Length (lf)	Allowed Density (W/lf)	Linear Allowance (Watts)	Total General AWA + LWA (Watts)
Hardscape Area	6672	0.019	126.8	364	0.2	54.6	181
					Initial Wattage Allowance for Entire Site (Watts):		200
					Instances of Initial Wattage Allowance (LZ 0 only)[1]		
					Total General Hardscape Allowance (Watts):		381

J. LIGHTING ALLOWANCE: PER APPLICATION

This section does not apply to this project.

K. LIGHTING ALLOWANCE: SALES FRONTAGE

This section does not apply to this project.

L. LIGHTING ALLOWANCE: ORNAMENTAL

This section does not apply to this project.

Generated Date/Time:
Documentation Software: EnergyPro
CA Building Energy Efficiency Standards - 2022 Nonresidential Compliance
Report Version: 2022.0.000
Schema Version: rev 20220101
Compliance ID: EnergyPro-2531-0824-0221
Report Generated: 2024-08-21 19:47:11

STATE OF CALIFORNIA
Outdoor Lighting
CALIFORNIA ENERGY COMMISSION

CERTIFICATE OF COMPLIANCE		NRCC-LTO-E
Project Name: McCandless Well Facility	Report Page:	(Page 6 of 7)
	Date Prepared:	8/21/2024

M. LIGHTING ALLOWANCE: PER SPECIFIC AREA

This section does not apply to this project.

N. EXISTING CONDITIONS POWER ALLOWANCE (alterations only)

This section does not apply to this project.

O. DECLARATION OF REQUIRED CERTIFICATES OF INSTALLATION

Selections have been made based on information provided in this document. If any selection has been changed by permit applicant, an explanation should be included in Table E. Additional Remarks. These documents must be provided to the building inspector during construction and can be found online

Form/Title
NRCI-LTO-E - Must be submitted for all buildings

P. DECLARATION OF REQUIRED CERTIFICATES OF ACCEPTANCE

There are no NRCA forms required for this project.

Generated Date/Time:
Documentation Software: EnergyPro
CA Building Energy Efficiency Standards - 2022 Nonresidential Compliance
Report Version: 2022.0.000
Schema Version: rev 20220101
Compliance ID: EnergyPro-2531-0824-0221
Report Generated: 2024-08-21 19:47:11

STATE OF CALIFORNIA
Outdoor Lighting
CALIFORNIA ENERGY COMMISSION

CERTIFICATE OF COMPLIANCE		NRCC-LTO-E
Project Name: McCandless Well Facility	Report Page:	(Page 7 of 7)
Project Address: 1650 McCandless Drive	Date Prepared:	8/21/2024

DOCUMENTATION AUTHOR'S DECLARATION STATEMENT

I certify that this Certificate of Compliance documentation is accurate and complete.

Documentation Author Name: Michael P. McDermott	Documentation Author Signature:
Company: Valley Energy Consultants	Signature Date: 2024-08-21
Address: 2201 Francisco Drive, Suite 140-451	CEA/HERS Certification Identification (if applicable): R19-09-30140 | NR19-09-30045
City/State/Zip: El Dorado Hills CA 95762	Phone: (916) 933-5791

RESPONSIBLE PERSON'S DECLARATION STATEMENT

I certify the following under penalty of perjury, under the laws of the State of California:

1. The information provided on this Certificate of Compliance is true and correct.
2. I am eligible under Division 3 of the Business and Professions Code to accept responsibility for the building design or system design identified on this Certificate of Compliance (responsible designer)
3. The energy features and performance specifications, materials, components, and manufactured devices for the building design or system design identified on this Certificate of Compliance conform to the requirements of Title 24, Part 1 and Part 6 of the California Code of Regulations.
4. The building design features or system design features identified on this Certificate of Compliance are consistent with the information provided on other applicable compliance documents, worksheets, calculations, plans and specifications submitted to the enforcement agency for approval with this building permit application.
5. I will ensure that a completed signed copy of this Certificate of Compliance shall be made available with the building permit(s) issued for the building, and made available to the enforcement agency for all applicable inspections. I understand that a completed signed copy of this Certificate of Compliance is required to be included with the documentation the builder provides to the building owner at occupancy.

Responsible Designer Name: Sharon M. Kimizuka, P.E.	Responsible Designer Signature:
Company: A TEEM Electrical Engineering, Inc.	Date Signed: 2024-08-21
Address: 3841 N. Freeway Blvd, Suite 145	License: E 15698
City/State/Zip: Milpitas CA 95834	Phone: (916) 457-8144

Generated Date/Time:
Documentation Software: EnergyPro
CA Building Energy Efficiency Standards - 2022 Nonresidential Compliance
Report Version: 2022.0.000
Schema Version: rev 20220101
Compliance ID: EnergyPro-2531-0824-0221
Report Generated: 2024-08-21 19:47:11

Valley Energy Consultants
2201 Francisco Drive
Suite 140-451
El Dorado Hills, CA 95762
Phone: (916) 933-5791 Fax: (916) 939-0125
www.TheMcDermottGroup.com

CEA STAMP:
CALIFORNIA ENERGY COMMISSION CERTIFIED ENERGY ANALYST
Michael McDermott
R19-09-30140 NR19-09-30045

T.E.E.M.
(916) 457-8144
FILE: 2312G
© NOVEMBER 2024
ATEEM ENGINEERING
ALL RIGHTS RESERVED

WEST YOST
Water. Engineered.
6800 Koll Center Parkway
Suite 150
Pleasanton, CA 94566
(925) 426-2580
FAX (530) 756-5991

Designer Stamp:
REGISTERED PROFESSIONAL ENGINEER SHARON M. KIMIZUKA NO. 15698 Exp.6-30-2026 ELECTRICAL STATE OF CALIFORNIA

Record Drawings

Designer: _____ Date: _____
Public Works Inspector: _____ Date: _____
Utility/Facility Dept. Head: _____ Date: _____
Project Engineer: _____ Date: _____
Public Improvements Initially Accepted by the City Council on: _____ Res. No. _____

Drawn By: ZK Date: 12/5/2024
Checked By: XL Date: 12/5/2024
Designed By: SK Date: 12/5/2024

Revisions

Num.	Description	Engr. Aprv.	Date

CITY OF MILPITAS
ENGINEERING DIVISION

McCANDLESS WELL FACILITY
PROJECT NO. 7076

TITLE 24 ENERGY OUTDOOR LIGHTING

RECOMMENDED FOR BIDDING BY: Lyhak Eam DATE: 2/7/2025
LYHAK EAM, P.E., Public Works Division Manager – Engineering

DWG NO. ET42
PROJECT NO. 7076
Rec. Dwg No.
SCALE:
SHEET 63 OF 70

Z:\ACADDWG\2023\2312g\2312gET042.dwg

P & I DIAGRAM SYMBOLS

SYMBOL	DESCRIPTION
XXX / XXX	FIELD MOUNTED INSTRUMENT
XXX / XXX	FACE MOUNTED INSTUMENT ON LOCAL PANEL, OPERATOR ACCESSIBLE
XXX / XXX	FACE MOUNTED INSTRUMENT ON FIELD PANEL, OPERATOR ACCESSIBLE
XXX / XXX	INSTRUMENT MOUNTED IN LOCAL PANEL, OPERATOR INACCESSIBLE
XXX / XXX	INSTRUMENT MOUNTED IN FIELD PANEL, OPERATOR INACESSIBLE
I	OPERATION PERFORMED WITH LOGIC OR HARDWIRED DEVICES
DWG #	– REFERENCE ELEMENTARY DWG. #
XXX / XXX	PLC OR COMPUTER FUNCTION PERFORMING OPERATION WITH VISUAL INDICATION
XXX / XXX	PLC OR COMPUTER FUNCTION PERFORMING OPERATION WITH VISUAL ALARM INDICATION
XXX / XXX	PLC OR COMPUTER PERFORMING INTERNAL OPERATION
XXX / XXX	PLC OR COMPUTER PERFORMING INTERNAL ALARM OPERATION
$\propto \int \partial/\partial t$	PROPORTIONAL, INTEGRAL, AND DIFFERENTIAL PARAMETERS
% +/–	RATIO AND BIAS PARAMETERS
	AUDIBLE ALARM (BUZZER OR HORN)
R#–C#	ANNUNCIATOR WINDOW R – ROW # C – COLUMN #
X	LAMP INDICATION (STATUS OR ALARM)
XXXXX	DISCRETE INPUT
	DISCRETE OUTPUT
	ANALOG INPUT
	ANALOG OUTPUT
a XXXX	JUMP TAG FROM ONE AREA TO ANOTHER AREA OF DRAWING "a" TAG CONNECT POINT ON EACH DRAWING
XXXX a	
P–X	CONTINUED ON DWG P–X
P–X	
#	AUTODIALER PRIORITY # PC BASED SOFTWARE

SYMBOL	DESCRIPTION
OPEN / CLOSED	VALVE (GENERAL)
	GATE (GENERAL)
	CHECK VALVE (GENERAL)
	PUMP (GENERAL)
	BLOWER (GENERAL)
XXXX	VALVE/GATE NUMBER
XXXXX	EQUIPMENT NUMBER
	ELECTRIC SIGNAL
	LOGIC OR DATA SIGNAL
	PNEUMATIC SIGNAL
	CAPILLARY TUBING (FILLED SYSTEM)
	HYDRAULIC SIGNAL
ES / AS	SONIC OR ELECTROMAGNETIC SIGNAL
E	ELECTRIC SUPPLY
SA	SERVICE AIR
IA	INSTRUMENT AIR
	DISCONNECT SWITCH

INSTRUMENT IDENTIFICATION LETTERS

	FIRST – LETTER	SUCCEEDING – LETTER			
	MEASURED OF INITIATING VARIABLE	MODIFIER	READOUT PASSIVE FUNCTION	OUTPUT FUNCTION	MODIFIER
A	ANALYSIS		ALARM		
B	BURNER, COMBUSTION		USER'S CHOICE	USER'S CHOICE	USER'S CHOICE
C	CONDUCTIVITY			CONTROLLER	
D	DENSITY	DIFFERENTIAL			
E	VOLTAGE		SENSOR, PRIMARY ELEMENT		
F	FLOW RATE	RATIO (FRACTION)			
G	GENERAL		GLASS VIEWING DEVICE		
H	HAND				HIGH, OPENED
I	CURRENT (ELEC.)		INDICATING, INDICATOR		
J	POWER	SCAN			
K	TIME, TIME SCHEDULE	TIME RATE OF CHANGE		CONTROL STATION	
L	LEVEL		LIGHT		LOW, CLOSED
M	MOISTURE	MOMENTARY			MIDDLE
N	STATUS		STATUS	USER'S CHOICE	USER'S CHOICE
O	OPERATOR		ORIFICE, RESTRICTION		
P	PRESSURE, VACUUM		POINT (TEST) CONNECTION		
Q	QUANTITY	INTEGRATE, TOTALIZE			
R	RESET		RECORD		
S	SPEED, FREQUENCY	SAFETY		SWITCH	
T	TEMPERATURE			TRANSMITTER	TEST
U	MULTIVARIABLE		MULTIFUNCTION	MULTIFUNCTION	MULTIFUNCTION
V	VIBRATION, MECH. ANALYSIS			VALVE, DAMPER LOUVER	
W	WEIGHT, FORCE		WELL		
X	SWITCH	X AXIS	UNCLASSIFIED	UNCLASSIFIED	UNCLASSIFIED
Y	EVENT, STATE OR PRESENCE	Y AXIS		RELAY, COMPUTER, CONVERTOR	
Z	POSITION DIMENSION	Z AXIS		DRIVER, ACTUATOR, UNCLASSIFIED FINAL CONTROL ELEMENT	

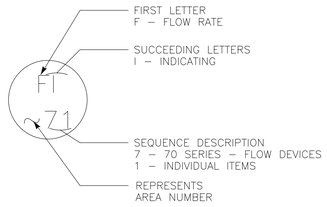

NUMBERING SEQUENCE

SEQUENCE NUMBER	DESCRIPTION
00	COMMON ALARM
01–09	INDIVIDUAL ITEMS
10	MECHANICAL
20	MECHANICAL
30	MECHANICAL
40	MECHANICAL
50	LEVEL DEVICES
60	PRESSURE DEVICES
70	FLOW DEVICES
80	ANALYTICAL DEVICES
90	SAFETY & SECURITY DEVICES

P&ID INSTRUMENT IDENTIFICATION EXAMPLE

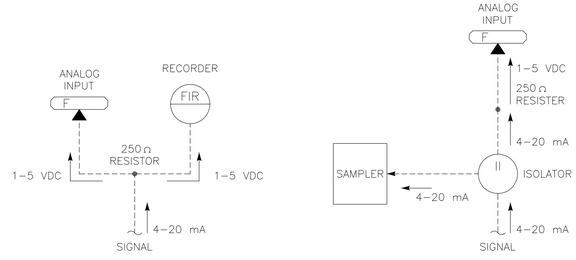

TYPICAL SIGNAL FLOWS

T.E.E.M.
(916) 457-8144
FILE: 2312G

© NOVEMBER 2024
ATEEM ENGINEERING
ALL RIGHTS RESERVED

WEST YOST
Water. Engineered.
6800 Koll Center Parkway
Suite 150
Pleasanton, CA 94566
(925) 426-2580
FAX (530) 756-5991

Designer Stamp:
REGISTERED PROFESSIONAL ENGINEER — LYHAK N. KIMLY — NO. 19698 — Exp.6-30-2026 — ELECTRICAL — STATE OF CALIFORNIA
2/5/2025

Record Drawings

Designer: _____ Date: _____
Public Works Inspector: _____ Date: _____
Utility/Facility Dept. Head: _____ Date: _____
Project Engineer: _____ Date: _____
Public Improvements Initially Accepted by the City Council on: _____ Res. No. _____

Drawn By: ZK Date: 2/5/2025
Checked By: XL Date: 2/5/2025
Designed By: SK Date: 2/5/2025

Revisions

Num.	Description	Engr. Aprv.	Date
1			

CITY OF MILPITAS
ENGINEERING DIVISION

McCANDLESS WELL FACILITY
PROJECT NO. 7076

INSTRUMENTATION SYMBOLS & ABBREVIATIONS

RECOMMENDED FOR BIDDING BY: Lyhak Eam DATE: 2/7/2025
LYHAK EAM, P.E., Public Works Division Manager – Engineering

DWG NO. I01
PROJECT NO. 7076
Rec. Dwg No.
SCALE:
SHEET 64 OF 70

Z:\ACADDWG\2023\2312g\2312g001.dwg

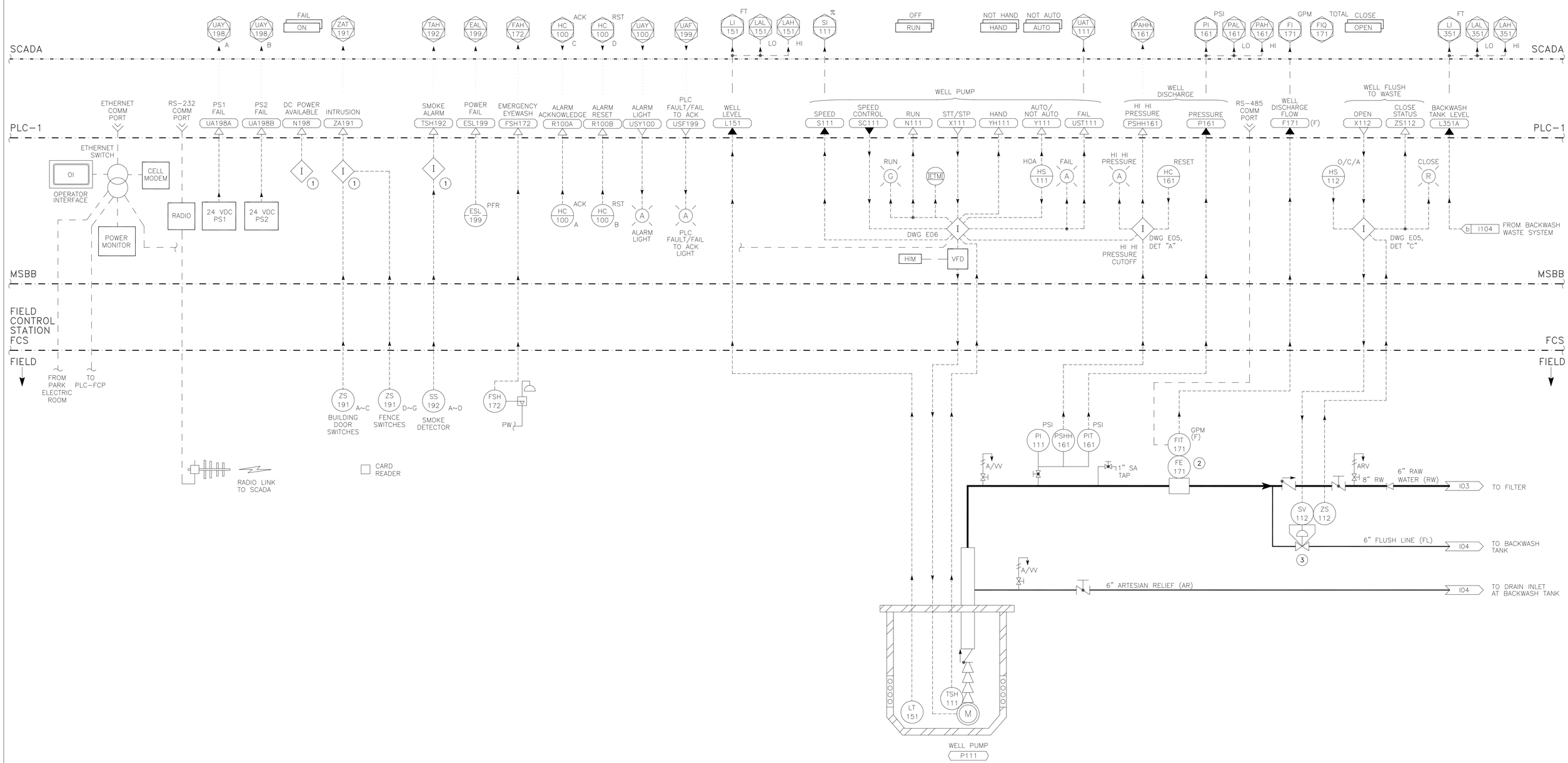

WELL & AUXILIARY SYSTEMS

NOTES:

1. WIRE SWITCH WIRING IN SERIES ON TERMINAL BLOCKS AND INSTALL 24VDC ISOLATION RELAY.
2. REMOVABLE 24"L x 8"ø SPOOL PIECE FOR FUTURE FLOWMETER. PROVIDE POWER AND SIGNAL CONNECTIONS FOR FUTURE FLOWMETER. (VALLEY WATER)
3. PROVIDE PRESSURE REDUCING/SUSTAINING VALVE WITH SOLENOID OVERRIDE CONTROL.

T.E.E.M.
(916) 457-8144

FILE: 2312G
© NOVEMBER 2024
ATEEM ENGINEERING
ALL RIGHTS RESERVED

WEST YOST
Water. Engineered.
6800 Koll Center Parkway
Suite 150
Pleasanton, CA 94566
(925) 426-2580
FAX (530) 756-5991

Designer Stamp: REGISTERED PROFESSIONAL ENGINEER — JOHN M. KINNEY — NO. 13698 — Exp.6-30-2026 — ELECTRICAL — STATE OF CALIFORNIA — 2/5/2025

Record Drawings

Designer: _____ Date: _____
Public Works Inspector: _____ Date: _____
Utility/Facility Dept. Head: _____ Date: _____
Project Engineer: _____ Date: _____
Public Improvements Initially Accepted by the City Council on: _____ Res. No. _____

Drawn By: ZK Date: 2/5/2025
Checked By: XL Date: 2/5/2025
Designed By: SK Date: 2/5/2025

Revisions

Num.	Description	Engr. Aprv.	Date
△			

CITY OF MILPITAS
ENGINEERING DIVISION

McCANDLESS WELL FACILITY
PROJECT NO. 7076

WELL & AUXILIARY SYSTEM P&ID

RECOMMENDED FOR BIDDING BY: Lyhak Eam DATE: 2/7/2025
LYHAK EAM, P.E., Public Works Division Manager – Engineering

DWG NO. I02
PROJECT NO. 7076
Rec. Dwg No.
SCALE:
SHEET 65 OF 70

Z:\ACADDWG\2023\2312g\2312g002.dwg

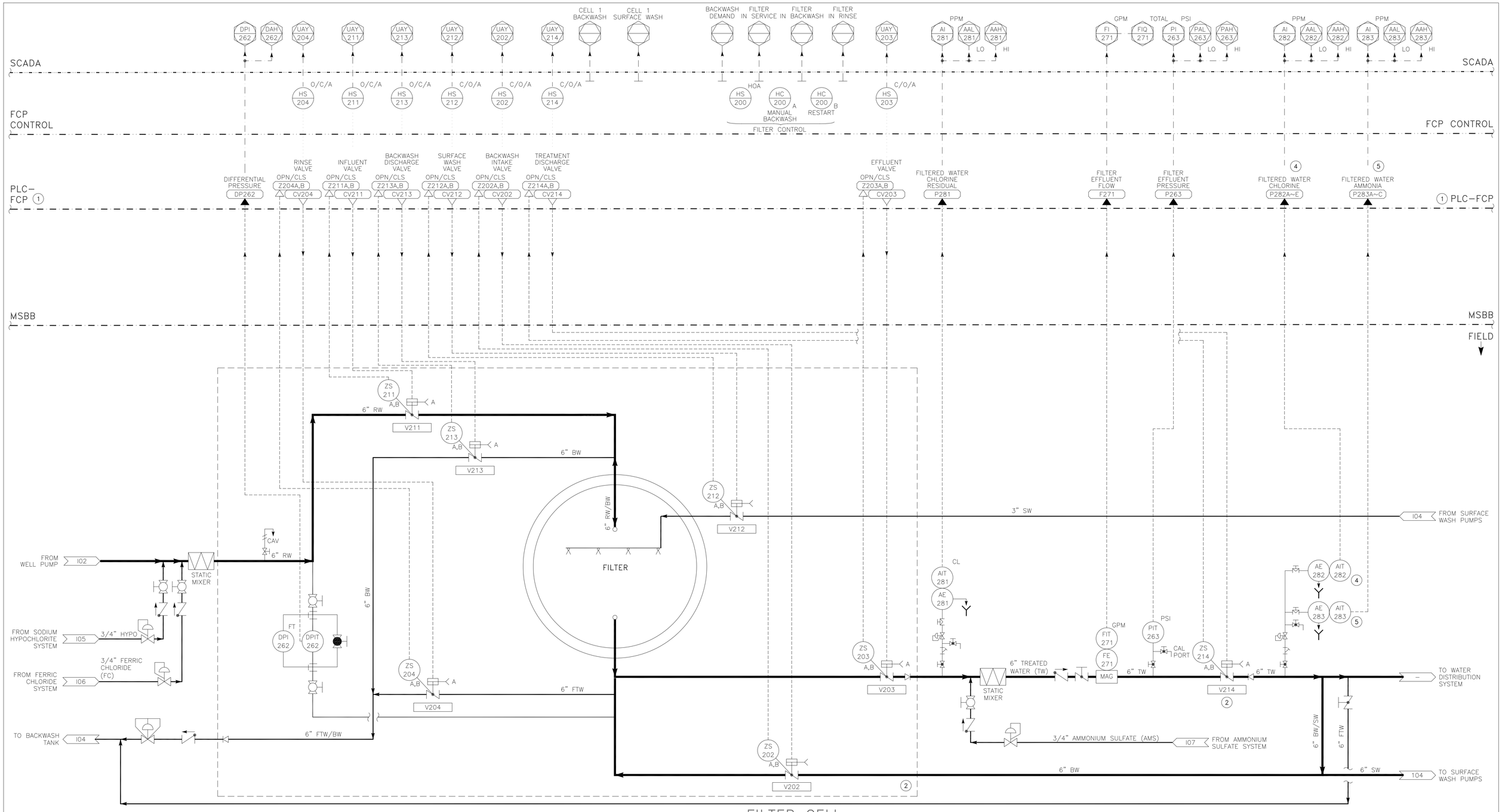

FILTER CELL

NOTE: (1) PLC–FCP I/O POINTS SHOWN ONLY FOR FIELD WIRING INTERFACES. THE FILTER PACKAGE SUPPLIER IS RESPONSIBLE FOR ASSIGNING AND PROVIDING PLC I/O POINTS FOR OTHER PANEL DEVICES.

(2) FILTER PACKAGE COMPONENTS TO BE SUPPLIED BY FILTER MANUFACTURER.

(3) WTP PLC–1 OPERATOR INTERFACE SHALL DISPLAY ALL PHYSICAL I/O, ALL ASSOCIATED ALARMS, PERTINENT INTERNAL I/O AND ALL SETPOINTS.

(4) HACH WATER DISTRIBUTION MONITORING PANEL (WDMP SC) WITH TOTAL CHLORINE, TURBIDITY, pH, CONDUCTIVITY AND TEMPERATURE MONITORING.

(5) HACH 5500SC PANEL WITH TOTAL AMMONIA, MONOCHLORAMINE AND FREE AMMONIA MONITORING.

T.E.E.M.
(916) 457-8144
FILE: 2312G
© NOVEMBER 2024
ATEEM ENGINEERING
ALL RIGHTS RESERVED

WEST YOST
Water. Engineered.
6800 Koll Center Parkway
Suite 150
Pleasanton, CA 94566
(925) 426-2580
FAX (530) 756-5991

Designer Stamp: REGISTERED PROFESSIONAL ENGINEER — JAMES M. KIMLEY — NO. 19598 — Exp.6-30-2026 — ELECTRICAL — STATE OF CALIFORNIA
2/5/2025

Record Drawings

Designer: _____ Date: _____
Public Works Inspector: _____ Date: _____
Utility/Facility Dept. Head: _____ Date: _____
Project Engineer: _____ Date: _____
Public Improvements Initially Accepted by the City Council on: _____ Res. No. _____

Drawn By: ZK Date: 2/5/2025
Checked By: XL Date: 2/5/2025
Designed By: SK Date: 2/5/2025

Revisions

Num.	Description	Engr. Aprv.	Date
1			

CITY OF MILPITAS — CALIFORNIA — JANUARY 20, 1954

CITY OF MILPITAS
ENGINEERING DIVISION

McCANDLESS WELL FACILITY
PROJECT NO. 7076

FILTER CELL P&ID

RECOMMENDED FOR BIDDING BY: Lyhak Eam DATE: 2/7/2025
LYHAK EAM, P.E., Public Works Division Manager – Engineering

DWG NO. I03
PROJECT NO. 7076
Rec. Dwg No.
SCALE:
SHEET 66 OF 70

Z:\ACADDWG\2023\2312g\2312g003.dwg

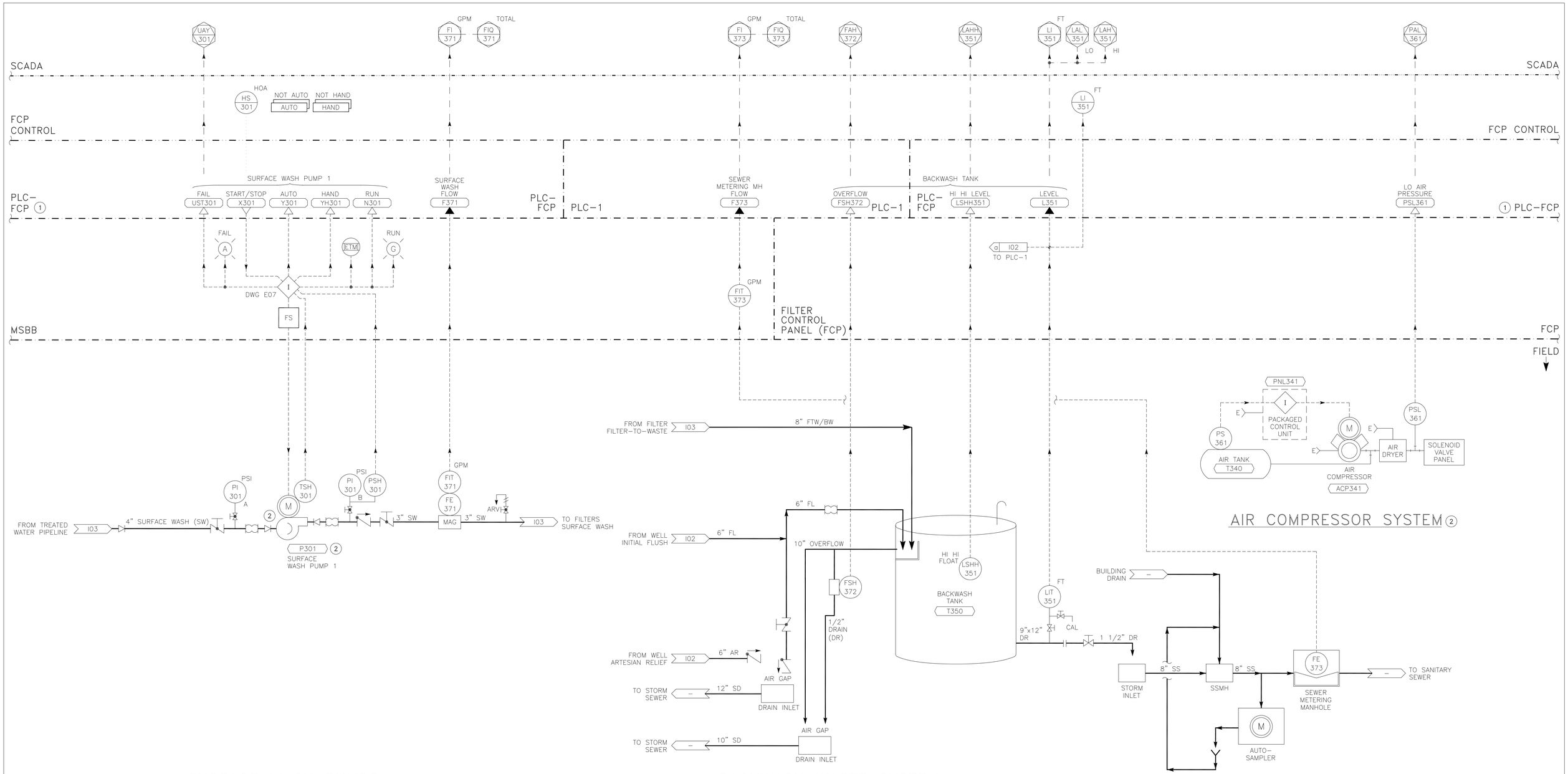

SURFACE WASH PUMPS

BACKWASH WASTE SYSTEM

AIR COMPRESSOR SYSTEM (2)

NOTE: (1) PLC–FCP I/O POINTS SHOWN ONLY FOR FIELD WIRING INTERFACES. THE FILTER PACKAGE SUPPLIER IS RESPONSIBLE FOR ASSIGNING AND PROVIDING PLC I/O POINTS FOR OTHER PANEL DEVICES.

(2) FILTER PACKAGE COMPONENTS TO BE SUPPLIED BY FILTER MANUFACTURER.

T.E.E.M.
(916) 457-8144
FILE: 2312G
© NOVEMBER 2024
ATEEM ENGINEERING
ALL RIGHTS RESERVED

WEST YOST
Water. Engineered.
6800 Koll Center Parkway
Suite 150
Pleasanton, CA 94566
(925) 426-2580
FAX (530) 756-5991

Designer Stamp:
REGISTERED PROFESSIONAL ENGINEER
M. KIMLEY
NO. 19698
Exp.6-30-2026
ELECTRICAL
STATE OF CALIFORNIA
2/5/2025

Record Drawings

Designer: _____ Date: _____
Public Works Inspector: _____ Date: _____
Utility/Facility Dept. Head: _____ Date: _____
Project Engineer: _____ Date: _____
Public Improvements Initially Accepted by the City Council on: _____ Res. No. _____

Drawn By: ZK Date: 2/5/2025
Checked By: XL Date: 2/5/2025
Designed By: SK Date: 2/5/2025

Revisions

Num.	Description	Engr. Aprv.	Date
1			

CITY OF MILPITAS
ENGINEERING DIVISION

McCANDLESS WELL FACILITY
PROJECT NO. 7076

SURFACE WASH PUMPS, BACKWASH WASTE & AIR COMPRESSOR SYSTEM P&ID

RECOMMENDED FOR BIDDING BY: Lyhak Eam DATE: 2/7/2025
LYHAK EAM, P.E., Public Works Division Manager – Engineering

DWG NO. I04
PROJECT NO. 7076
Rec. Dwg No.
SCALE:
SHEET 67 OF 70

Z:\ACADDWG\2023\2312g\2312g004.dwg

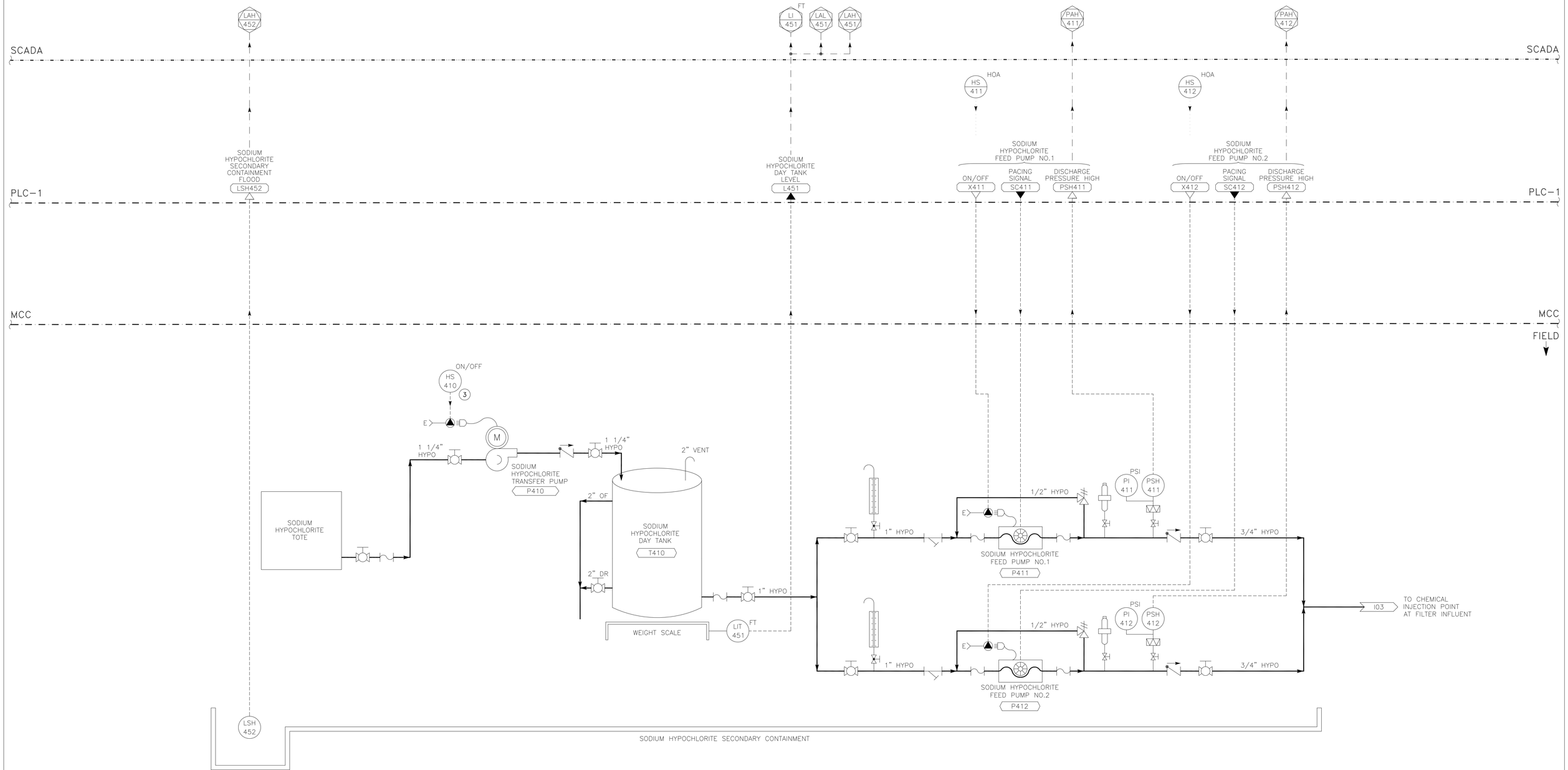

SODIUM HYPOCHLORITE SYSTEM

NOTE: (1) PLC–FCP I/O POINTS SHOWN ONLY FOR FIELD WIRING INTERFACES. THE FILTER PACKAGE SUPPLIER IS RESPONSIBLE FOR ASSIGNING AND PROVIDING PLC I/O POINTS FOR OTHER PANEL DEVICES.

(2) FILTER PACKAGE COMPONENTS SHOWN ON THIS DWG SHALL BE INSTALLED BY CONTRACTOR.

(3) MOMENTARY – ON/OFF SWITCH FOR MANUAL CONTROL OF PUMP.

T.E.E.m.
(916) 457-8144
FILE: 2312G
© NOVEMBER 2024
ATEEM ENGINEERING
ALL RIGHTS RESERVED

WEST YOST
Water. Engineered.
6800 Koll Center Parkway
Suite 150
Pleasanton, CA 94566
(925) 426-2580
FAX (530) 756-5991

Designer Stamp:
REGISTERED PROFESSIONAL ENGINEER — LYHAK N. KAM EAM — NO. 15698 — Exp.6-30-2026 — ELECTRICAL — STATE OF CALIFORNIA
2/5/2025

Record Drawings

Designer: _____ Date: _____
Public Works Inspector: _____ Date: _____
Utility/Facility Dept. Head: _____ Date: _____
Project Engineer: _____ Date: _____
Public Improvements Initially Accepted by the City Council on: _____ Res. No. _____

Drawn By: ZK Date: 2/5/2025
Checked By: XL Date: 2/5/2025
Designed By: SK Date: 2/5/2025

Revisions

Num.	Description	Engr. Aprv.	Date
△			

CITY OF MILPITAS
ENGINEERING DIVISION

McCANDLESS WELL FACILITY
PROJECT NO. 7076

SODIUM HYPOCHLORITE SYSTEM P&ID

RECOMMENDED FOR BIDDING BY: Lyhak Eam DATE: 2/7/2025
LYHAK EAM, P.E., Public Works Division Manager – Engineering

DWG NO. I05
PROJECT NO. 7076
Rec. Dwg No.
SCALE:
SHEET 68 OF 70

Z:\ACADDWG\2023\2312g\2312g005.dwg

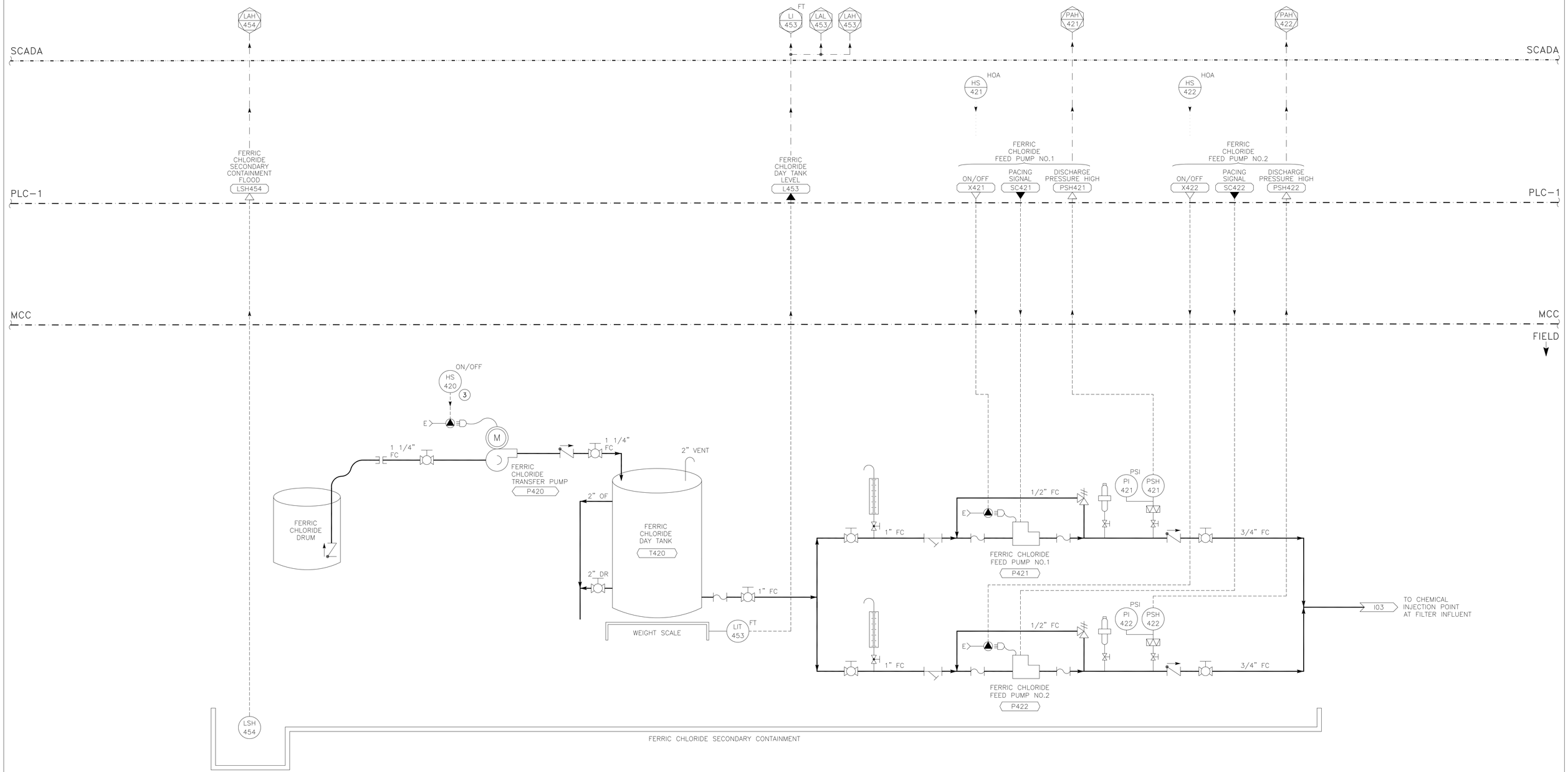

FERRIC CHLORIDE SYSTEM

NOTE: (1) PLC–FCP I/O POINTS SHOWN ONLY FOR FIELD WIRING INTERFACES. THE FILTER PACKAGE SUPPLIER IS RESPONSIBLE FOR ASSIGNING AND PROVIDING PLC I/O POINTS FOR OTHER PANEL DEVICES.

(2) FILTER PACKAGE COMPONENTS SHOWN ON THIS DWG SHALL BE INSTALLED BY CONTRACTOR.

(3) MOMENTARY – ON/OFF SWITCH FOR MANUAL CONTROL OF PUMP.

T.E.E.m.
(916) 457-8144
FILE: 2312G
© NOVEMBER 2024
ATEEM ENGINEERING
ALL RIGHTS RESERVED

WEST YOST
Water. Engineered.
6800 Koll Center Parkway
Suite 150
Pleasanton, CA 94566
(925) 426-2580
FAX (530) 756-5991

Designer Stamp:
REGISTERED PROFESSIONAL ENGINEER — M. KIMLA — NO. 19598 — Exp.6-30-2026 — ELECTRICAL — STATE OF CALIFORNIA
2/5/2025

Record Drawings

Designer: _____ Date: _____
Public Works Inspector: _____ Date: _____
Utility/Facility Dept. Head: _____ Date: _____
Project Engineer: _____ Date: _____
Public Improvements Initially Accepted by the City Council on: _____ Res. No. _____

Drawn By: ZK Date: 2/5/2025
Checked By: XL Date: 2/5/2025
Designed By: SK Date: 2/5/2025

Revisions

Num.	Description	Engr. Aprv.	Date
1			

CITY OF MILPITAS
ENGINEERING DIVISION

McCANDLESS WELL FACILITY
PROJECT NO. 7076

FERRIC CHLORIDE SYSTEM P&ID

RECOMMENDED FOR BIDDING BY: Lyhak Eam DATE: 2/7/2025
LYHAK EAM, P.E., Public Works Division Manager – Engineering

DWG NO. I06
PROJECT NO. 7076
Rec. Dwg No.
SCALE:
SHEET 69 OF 70

Z:\ACADDWG\2023\2312g\2312gI006.dwg

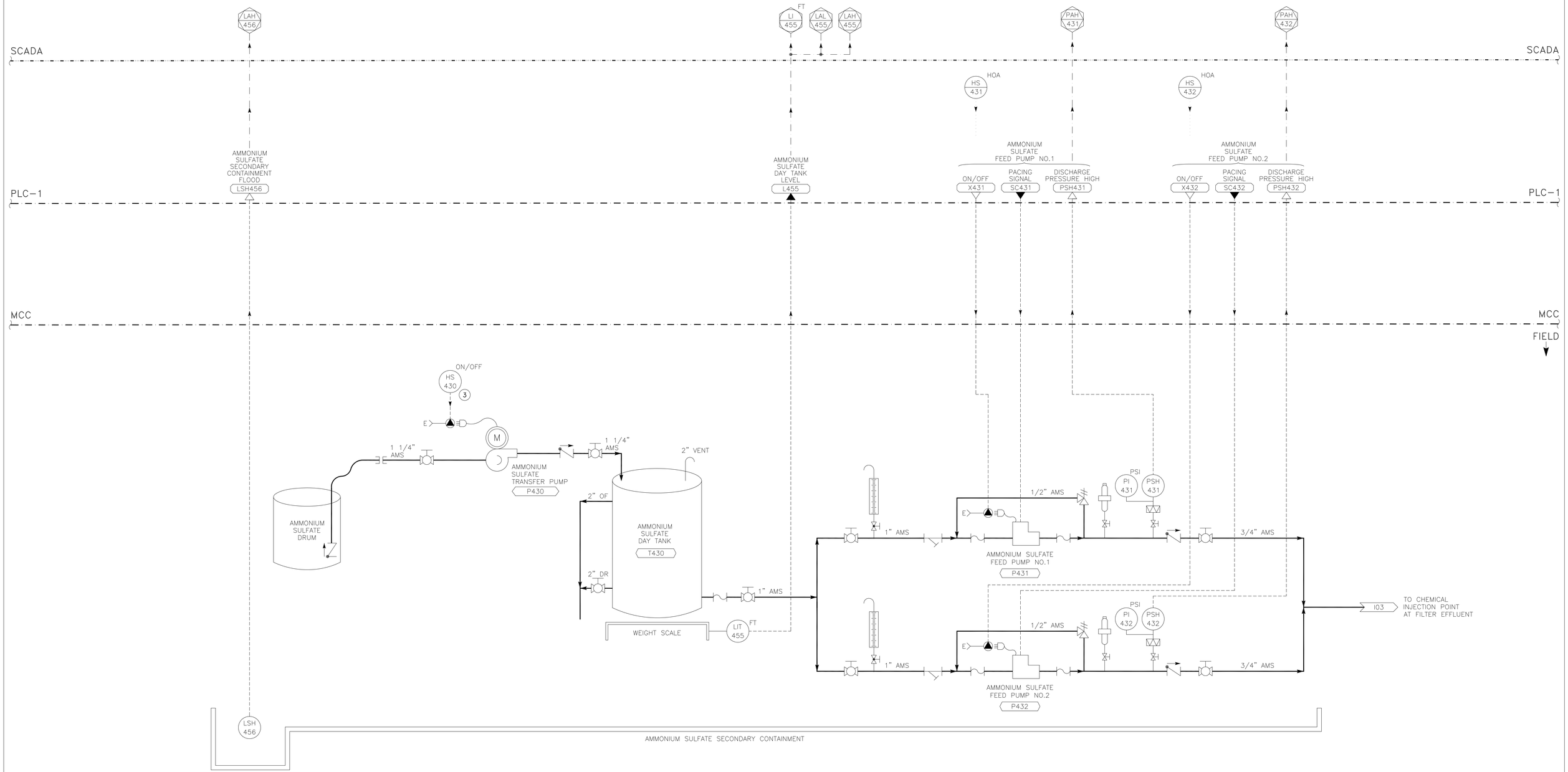

AMMONIUM SULFATE SYSTEM

NOTE: (1) PLC-AMSP I/O POINTS SHOWN ONLY FOR FIELD WIRING INTERFACES. THE FILTER PACKAGE SUPPLIER IS RESPONSIBLE FOR ASSIGNING AND PROVIDING PLC I/O POINTS FOR OTHER PANEL DEVICES.

(2) FILTER PACKAGE COMPONENTS SHOWN ON THIS DWG SHALL BE INSTALLED BY CONTRACTOR.

(3) MOMENTARY – ON/OFF SWITCH FOR MANUAL CONTROL OF PUMP.

T.E.E.m.
(916) 457-8144
FILE: 2312G

© NOVEMBER 2024
ATEEM ENGINEERING
ALL RIGHTS RESERVED

WEST YOST
Water. Engineered.
6800 Koll Center Parkway
Suite 150
Pleasanton, CA 94566
(925) 426-2580
FAX (530) 756-5991

Designer Stamp:

REGISTERED PROFESSIONAL ENGINEER
JOHN M. KIMBERLY
NO. 15698
Exp.6-30-2026
ELECTRICAL
STATE OF CALIFORNIA

2/5/2025

Record Drawings

Designer: _____ Date: _____
Public Works Inspector: _____ Date: _____
Utility/Facility Dept. Head: _____ Date: _____
Project Engineer: _____ Date: _____
Public Improvements Initially Accepted by the City Council on: _____ Res. No. _____

Drawn By: ZK Date: 2/5/2025
Checked By: XL Date: 2/5/2025
Designed By: SK Date: 2/5/2025

Revisions

Num.	Description	Engr. Aprv.	Date
△			

CITY OF MILPITAS
ENGINEERING DIVISION

McCANDLESS WELL FACILITY
PROJECT NO. 7076

AMMONIUM SULFATE SYSTEM P&ID

RECOMMENDED FOR BIDDING BY: Lyhak Eam DATE: 2/7/2025
LYHAK EAM, P.E., Public Works Division Manager – Engineering

DWG NO. I07
PROJECT NO. 7076
Rec. Dwg No.
SCALE:
SHEET 70 OF 70

Z:\ACADDWG\2023\2312g\2312g007.dwg

TECHNICAL SPECIFICATIONS

TABLE OF CONTENT

DIVISION 1 – GENERAL REQUIREMENTS

01110 Summary of Work
01140 Work Coordination and Constraints
01310 Project Meetings
01330 Submittals
01340 Requests for Information and Clarifications
01400 Construction Staking
01500 Construction Facilities and Utilities
01560 Environmental Controls
01600 Materials and Equipment
01610 Seismic Anchorage and Bracing
01611 Seismic Design Requirements
01770 Contract Closeout Procedures
01780 Record Documents
01782 Operation and Maintenance Information
01810 Starting and Adjusting
01820 Training
01825 Equipment and System Testing
01890 Restoration of Improvements
01999 Reference Forms

DIVISION 2 – SITE WORK

02071 Geotextile Fabric
02085 Precast Concrete Utility Structures
02300 Earthwork
02740 Asphalt Paving
02821 Chain Link Fences and Gates

DIVISION 3 – CONCRETE

03301 Cast-in-Place Concrete
03600 Grout

DIVISION 4 – MASONRY

04200 Concrete Masonry Units

DIVISION 5 – METALS

05300 Metal Decking
05500 Miscellaneous Metal
05501 Anchor Bolts
05550 Prefabricated Metal Roof Trusses

DIVISION 6 – WOOD AND PLASTICS

06200 Finish Carpentry

DIVISION 7– THERMAL AND MOISTURE PROTECTION

07210 Thermal Insulation
07260 Vapor Retarders
07411 Metal Roofing Panels
07600 Flashing and Sheet Metal
07900 Sealants and Caulking
07910 Preformed Joint Fillers

DIVISION 8 – DOORS AND WINDOWS

08110 Metal Doors and Frames
08710 Finish Hardware

DIVISION -9 – FINISHES

09290 Gypsum Board
09900 Coating Systems
09960 High Performance Coatings

DIVISION 10 – SPECIALTIES

10200 Safety and Signage

10520 Fire Protection

DIVISION 11 – EQUIPMENT

11000 General Requirements for Equipment
11002 Equipment Mounting
11060 Electric Motors
11342 Submersible Well Pump
11364 Centrifugal Water Pump
11380 Chemical Feed Equipment
11475 Air Compressor Unit
11500 Disinfection

DIVISION 12 – FURNISHINGS

12350 Laboratory Casework

DIVISION 13 – SPECIAL CONSTRUCTION

13111 Galvanic Cathodic Protection for Buried Pipes
13112 Tank Internal Cathodic Protection System
13208 Welded Steel Tank
13216 Chemical Storage Tanks
13224 Pressure Filter
13237 Fiberglass Reinforced Plastic (FRP) Grating

DIVISION 15 – MECHANICAL

15050	Piping Systems
15060	Pipe Hangers and Supports
15076	Piping and Valve Identification Systems
15097	Seismic Restraints for Piping
15110	Valves and Appurtenances
15400	Building and Plumbing Fixtures
15736	Self-Contained Air-Conditioning Units
15805	Ventilation Equipment
15951	Testing Gravity Flow Pipelines
15996	Testing Pressure Piping

DIVISION 16 – ELECTRICAL

16010	Electrical
16110	Conduit, Boxes & Grounding
16120	Wire, Fuses & Terminal Blocks
16250	Automatic Transfer Switch
16426	Main Switchboard
15470	Panelboard and Panelboard Transformer
16480	Motor Control Center
16481	Variable Frequency Drive
16605	Electrical System Analysis
16915	Control Strategies
16940	Instrumentation

CITY PROJECT NO. 7076 **MCCANDLESS WELL FACILITY**

Design Team Names and Addresses

Stamps

Civil and Mechanical Engineer:
Jeff Wanlass
West Yost Associates
2020 Research Park Drive, Suite 100
Davis, CA 95618
(530) 756-5905
jwanlass@westyost.com

2/6/2025

Corrosion Engineer:
J. Darby Howard Jr.
JDH Corrosion
1100 Willow Pass Court
Concord, CA 94520
(925) 927-6630
dhoward@jdhcorrosion.com

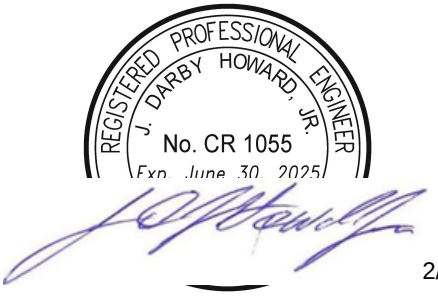

2/6/2025

Architect/Structural Engineer:
Tim Elliott
PASE
2633 Camino Ramon, Suite 500
San Ramon, CA 94583
(408) 957-9220
tim.elliott@pase.com

Electrical Engineer:
Sharon Kimizuka
ATEEM
3841 North Freeway Blvd. Suite #145
Sacramento, CA 95834
(916) 457-8144
skimizuka@ateem.com

SECTION 01110

SUMMARY OF WORK

PART 1 - GENERAL

1.01 SECTION INCLUDES

A. The section provides a general description of the Project and the Work to be performed by the Contractor. Refer to other sections of the Contract Documents and the technical specifications for more detailed scope of the Work. The following is a general project description:

1. The work consists of construction of the McCandless Well Facility that will pump and treat water from the McCandless Well for iron, manganese, and arsenic removal. The work includes installation of a 400 gallon per minute submersible well pump, a pressure filter and associated equipment, chemical storage and feed equipment, a 48,000-gallon welded steel backwash water holding tank, a building to house the chemical and electrical equipment, piping, valves, instrumentation, and controls, as described within the Contract Specifications and Drawings.

1.02 REFERENCED SECTIONS

A. None

1.03 WORK COVERED BY CONTRACT

A. The Work covered under this Contract will be performed at the municipal well site on the City's McCandless Park. The address of the site is 1660 McCandless Drive, Milpitas, California. The project location is indicated on the Drawings.

B. The Work to be performed by the Contractor generally includes:

1. Furnishing all labor, superintendence, materials, power, water, tools, equipment and services required by the Contract Documents or required to complete the Work.

2. Coordinating work of all trades.

3. Furnishing and installing miscellaneous items incidental to or necessary for completion of the Work, whether these items are specifically indicated in the Contract Documents or not.

C. The Work components consist of, but are not limited to, the following items:

1. A submersible well pump and motor, VFD, and discharge and flushing piping, fittings, and valves for an existing 16-inch diameter well.

2. A granular media filter in a vertical pressurized filter.

3. A surface wash pump station and air compressor/receiver unit for filter operation.

4. Chemical storage and feed systems, including chemical transfer pumps, day tanks, chemical metering pumps, piping, valves, fittings, water quality analyzers, and associated appurtenances.

5. A nominal 48,000-gallon welded steel backwash water holding tank.

6. Process piping, storm inlets and piping, sewer manholes and piping, and site utilities.

7. Connections to existing park utilities, including connections to electrical and communications facilities, storm drain manhole and storm drain, sanitary sewer, and potable water pipes.

8. Concrete equipment and housekeeping pads.

9. Electrical service and equipment.

10. Site lighting.

11. Instrumentation.

12. A supervisory control and data acquisition (SCADA) system, including programmable logic controllers (PLCs).

13. A CMU building with an electrical room and a chemical room; including HVAC, plumbing, lighting, lab bench and sink, mop sink, hose bib and rack, an emergency eyewash and shower station, chemical containment sumps, fire walls for incompatible chemical systems separation, and doors and hardware.

14. Painting and finishes.

15. Asphalt concrete paving, concrete valley gutter, and associated site work.

16. Chain-link fence with automatic gates and mow band.

1.04 OTHER CONTRACTS

A. The City may be undertaking other projects at the facility site simultaneously with the Work to be completed under this project. Coordination with the contractors undertaking related work or un-related work within the plant is the responsibility of the Contractor.

B. There are two other construction projects currently scheduled in the immediate vicinity of the Well Facility Project:

1. Large Dog Park Play Area: The construction of the large dog park area, located north of the project site, may overlap with the development of the Well Facility. This area is currently designated as a staging area for the well project. Future coordination with other contractors may be required.

2. Pedestrian Bridge: The City is also planning constructing a pedestrian bridge north of the Well Facility project. The bridge will span East Penitencia Channel. Interference with the Well Facility construction should be minimal, but some coordination may be required, particularly during any discharges from the well into the storm drain system.

1.05 SPECIFICATION LANGUAGE

A. Specifications may be written in the imperative mood in streamlined form in accordance with practices and principals of the Construction Specifications Institute.

B. Imperative language is directed to the Contractor unless specifically noted otherwise.

C. The words “shall be” are included by inference where a colon (:) is used within sentences or phrases.

1.06 REGULATORY REQUIREMENTS

A. Comply with all Federal, State, and local laws, regulations, codes, and ordinance applicable to the work.

B. References in the Contract Documents to local codes shall mean those of City of Milpitas and Santa Clara County, California.

C. Other standards and codes that apply to the work are designated in the Specifications.

1.07 ACCESS BY GOVERNMENT OFFICIALS

A. Authorized representatives of governmental agencies shall have access to the work area at all times. Provide proper facilities for access and inspection.

1.08 PROTECTION OF PUBLIC AND PRIVATE PROPERTY

A. Pipeline construction will encounter numerous existing features of various types, such as fences, drain culverts, irrigation facilities, roadside drainage facilities, mailboxes, signs, private and public driveways, curbs, asphalt pavement, buildings, utility poles, guy wires and other surface structures. Contractor shall protect existing features of this nature and all features affected by construction operations shall be restored to their original condition.

B. To the greatest extent possible, remove existing features without damaging the materials and re-use the material to place back in the original condition. When existing features are damaged during removal, install new materials of similar type, appearance and function, at no additional cost to the City.

C. Contractor shall be responsible for all damage to streets, roads, driveways, highways, shoulders, ditches, embankments, culverts, bridges, and other public or private property, regardless of location or character, that may be caused by transporting equipment, materials, or workers to or from the work or any part or site thereof, whether by Contractor or Contractor’s subcontractors or suppliers.

D. Keep fire hydrants and water control valves free from obstruction and available for use at all times.

PART 2 - PRODUCTS (NOT USED)

PART 3 - EXECUTION (NOT USED)

END OF SECTION

(THIS PAGE LEFT BLANK INTENTIONALLY)

SECTION 01140

WORK COORDINATION AND CONSTRAINTS

PART 1 - GENERAL

1.01 SECTION INCLUDES

A. Schedule requirements, construction constraints, and interface with existing facilities.

1.02 REFERENCED SECTIONS

A. The following Section is reference in this Section

1. General Conditions

PART 2 - PRODUCTS (NOT USED)

PART 3 - EXECUTION

3.01 GENERAL

A. Schedule and coordinate the overall Work and construction operations, including the work of subcontractors and the timely provision of products and supplies.

B. Perform Work in an orderly and logical sequence. Individual specification Sections may identify specific requirements that are related to Work sequence. These types of constraints are not repeated in this Section but shall be followed by the Contractor.

3.02 WORK COORDINATION

A. Connection to Existing Storm Drain System

1. Contractor shall make all connections to existing storm drain system.

2. Contractor shall make all excavations and furnish, install and maintain such shoring, bracing, and sheeting, and all materials necessary for the pipeline and these connections. Provide all materials including for a complete connection to existing manhole and storm drain pipe, and other related work as required for a complete installation, complete in place, ready for operation.

3. Shutdown of the City's storm drain system will not be required.

B. Connection to Existing Sanitary Sewer System

1. Contractor shall make all connections to existing sanitary sewer system.

2. Contractor shall make all excavations and furnish, install and maintain such shoring, bracing, and sheeting, and all materials necessary for the pipeline and these connections. Provide all materials including for a complete connection to existing sewer pipe, and other related work as required for a complete installation, complete in place, ready for operation.

3. Shutdown of the City's sewer system will not be required.

C. Connection to Existing Water System

1. Contractor shall make all connections to the existing water system but shall coordinate with the City for operation of existing water valves. Contractor shall

not operate existing water valves. Water valve operation shall be conducted by the City only.

2. Contractor shall make all excavations and furnish, install and maintain such shoring, bracing, and sheeting, and all materials necessary for the pipeline and these connections. Provide all materials including pipe, valves, mechanical couplings, and polyethylene sheets for a complete connection to existing pipe, and other related work as required for a complete installation, complete in place, ready for operation.

3. If a shutdown of the City's water system is required, such operation shall occur only between 9:00 A.M. and 3:00 P.M. during the off-peak water use season during the months of November through April. In preparation of the connection work, proceed according to the following schedule unless otherwise required by the City:

   a. Locate, identify material, and general condition of existing water mains and other underground utilities by potholing or excavation prior to ordering connection pieces. Notify the Construction Inspector of any apparent conflicts with the new work.

   b. Complete all excavations and expose existing pipe in the area of the water main connections.

   c. Provide all materials, equipment, temporary pumping equipment, and supplies approved by City and ready for installation.

   d. Isolate the work area with barricades and other traffic control devices. Provide continuous traffic access around the work area at all times.

   e. Install temporary backflow device (construction check).

   f. After connections are completed and tested, backfill all trenches with aggregate base and provide temporary paving.

   g. After improvements are completed and tested, restore full water system operation. Miscellaneous cleanup and other minor work may be delayed beyond restoration of water service. However, in no event shall work be delayed beyond the allowed work period.

4. Coordinate connections with City staff; provide prior notice for the need to complete a water connection. Notify the City of any shutdown 2 weeks, 1 week, and 24 hours in advance of any proposed shutdown. Schedule and coordinate the necessary shutdown of the existing water facilities with the City, the shutdown shall be held to a minimum and the Contractor shall have all materials required for the work at the job site prior to requesting the shutdown.

3.03 WORK CONSTRAINTS

A. Work Hours: See General Conditions, Article 28 for work hour constraints.

END OF SECTION

(THIS PAGE LEFT BLANK INTENTIONALLY)

SECTION 01310

PROJECT MEETINGS

PART 1 - GENERAL

1.01 SECTION INCLUDES

A. Requirements for calling for and conducting meetings for the Work.

1.02 REFERENCED SECTIONS

A. The following Sections are referenced in this Section

1. None

1.03 GENERAL

A. Project meetings and conferences are an important administration and communication requirement of all project participants. Meetings will be conducted throughout the course of the construction to address issues related to the Work, review and coordinate progress of the Work, and to discuss other matters of common interest to project participants.

B. Meeting and conference locations and qualified participants will be determined by the Engineer and the Contractor based on the meeting agenda topics.

1.04 PRECONSTRUCTION CONFERENCE

A. Prior to the start of construction, the Engineer will schedule a meeting of the Contractor, City, and their respective representatives. The general purpose of the meeting will be to establish working relationships, begin coordination of construction matters, discuss the Work, and to review the pertinent features of the Contract.

B. The agenda for the meeting will cover at least the following items, a more detailed agenda will be distributed at the meeting:

1. Organization of the Contractor's forces and personnel, including subcontractors and materials suppliers.

2. Lines of authority and channels and procedures for communication.

3. Contractor’s construction schedule, including sequence of critical work.

4. Processing of shop drawings and other data that will be submitted to City for review.

5. Processing of change order requests and monthly applications for payment.

6. Procedures for quality control, housekeeping and related matters.

C. Contractor should be prepared to discuss the following topics:

1. Preliminary construction schedule and critical path.

2. Schedule of submittals and submittals needing short turn-around times.

3. Schedule of Values for construction payments.

4. Critical work sequencing.

5. Plans for mobilization, arrangement and use of staging and storage areas, use of site, location and arrangement of field offices, and site security.

D. Minutes of Meeting

1. The Engineer will compile minutes of the meeting and distribute copies to all participants.

1.05 PROGRESS MEETINGS

A. Unless otherwise arranged, there will be a weekly progress meeting at a time and at an on-site location that is mutually agreed upon between the Contractor, Engineer and City.

1. Meetings are to enable orderly project review during the progress of work.

2. Engineer, City, Contractor's Superintendent, representatives of subcontractors, suppliers' representatives as may be needed, other Contractors working at the site, and other parties shall attend these meetings.

3. Engineer will preside over the meeting and will compile and distribute minutes of the meeting.

B. The purpose of the weekly meetings is to coordinate the efforts of all concerned to result in smooth and coordinated progress towards completion of the overall project.

C. Contractor shall bring to each weekly meeting the updated 3-week "look ahead" schedule.

D. The Contractor will be required to address the following items at the weekly meeting:

1. Work completed last week.

2. Work anticipated next week.

3. Log of submittals and Requests for Information.

4. Contract document deficiencies or questions noted during prior week.

5. Schedule status and corrective measures and procedures that are planned to place the project back on schedule, if such action is necessary.

6. Report of any accidents, and any site safety issues that need to be addressed.

E. Other agenda items to be discussed include:

1. Review and revise as necessary and approve minutes of previous meetings.

2. Status of Requests for Information, Change Order Requests, submittals and shop drawings.

3. Identify problems that impede planned progress.

4. Other current business pertaining to the Work.

F. Revision of Minutes

1. Unless published minutes are challenged in writing prior to the next regularly scheduled progress meeting, they will be accepted as properly stating the activities and decisions of the meeting.

2. Persons challenging published minutes shall reproduce and distribute copies of the challenge to all indicated recipients of the particular set of minutes.

3. Challenge to minutes shall be settled as priority item of "old business" at the next regularly scheduled meeting.

1.06 SUBMITTAL MEETINGS

A. When required in the individual technical specification, or if requested by the Contractor or the Engineer, a meeting regarding a required submittal will be held to facilitate the timeliness of the submittal preparation and review process.

1.07 SPECIAL MEETINGS

A. Any time during progress of the Work, the City shall have the authority to require the Contractor and any subcontractor, suppliers, or service providers to attend job-site conferences on matters which require immediate or special attention. Any notice of such conference shall be duly observed and complied with by the Contractor and subcontractors, suppliers, or service providers without extra cost to the City.

PART 2 - PRODUCTS (NOT USED)

PART 3 - EXECUTION (NOT USED)

END OF SECTION

(THIS PAGE LEFT BLANK INTENTIONALLY)

SECTION 01330

SUBMITTALS

PART 1 - GENERAL

1.01 SUMMARY

A. Requirements for the submittal of information that will enable determination of whether the Contractor's proposed materials, equipment or methods of work are in general conformance to the design concept and in compliance with the Contract Documents.

B. Furnish drawings, specifications, descriptive data, certificates, samples, test results, methods, schedules, manufacturer's installation instructions and other information as indicated.

C. Refer to Section 16010 – Electrical for additional submittal requirements for Electrical and Instrumentation equipment.

1.02 REFERENCED SECTIONS

A. The following Sections are referenced in this Section

1. General Conditions

2. Section 16010 – Electrical

1.03 CONTRACTOR'S RESPONSIBILITIES

A. Contractor shall be responsible for the accuracy and completeness of the information contained in each submittal and shall assure that the materials and equipment incorporated into the Work, or the methods of performing the Work shall be as described in the accepted submittals.

B. Verify that all features of all products conform to the specified requirements. Submittal documents shall be clearly edited to indicate only those items, models, or series of equipment that are being submitted for review. Extraneous materials shall be crossed out or otherwise obliterated.

C. Coordinate submittals among subcontractors and suppliers. Ensure that there is no conflict with other submittals and notify the City in each case where his submittal may affect the work of another contractor or the City, including those submittals complying with unit responsibility requirements specified in applicable technical sections.

D. Coordinate submittals with the Work so that work will not be delayed. Coordinate and schedule different categories of submittals, so that one will not be delayed for lack of coordination with another. No extension of time will be allowed because of failure to properly schedule submittals.

E. Do not proceed with work related to a submittal until the submittal process is complete and the submittal has received a response "No Exceptions Taken" or "Make Corrections Noted."

F. Certify on each submittal document that the Contractor has reviewed the submittal, verified field conditions, and complied with the contract documents.

1. Include a copy of the specification section with addendum updates, all referenced and applicable sections, and each paragraph check-marked to indicate specification compliance or marked to indicate requested deviations from specification requirements.

a. Use check marks (✓) to denote full compliance with a paragraph as a whole.

b. If deviations from the specifications are indicated and, therefore requested by the Contractor, underline each deviation and denote by a number in the margin to the right of the identified paragraph.

c. The remaining portions of the paragraph not underlined will signify compliance on the part of the Contractor with the specifications.

d. Include a detailed, written justification for each deviation.

2. Failure to comply with this paragraph is sufficient cause to reject the entire submittal.

1.04 REVIEW COSTS

A. The City's cost for review of submittals for the same proposed materials, equipment or work will be apportioned as follows:

1. The cost of review of the initial submittal and the first revised submittal will be borne by the City.

2. The cost to review all additional revised submittals after the first revised submittal will be charged to the Contractor. The cost of review shall include, without limitation, administrative, design and engineering activities directly related to review of submittals.

1.05 SUBMITTAL INDEX

A. Submit a List of Project Submittals, in accordance with the requirements in the General Conditions, Article 15.

B. Update and resubmit the submittal index on a monthly basis where additional submittals are identified, or as necessary

1.06 CATEGORIES OF SUBMITTALS

A. General

1. Submittals fall into two general categories;

a. Submittals for review and comment require action by the Engineer.

b. Submittals that are primarily for information only do not require Engineer's approval.

B. Submittals for Review and Comment

1. Transmit submittals for review and comment to the City. The Engineer will review the submittal for compliance with the Contract requirements and will provide written comments regarding acceptability.

C. Submittals for Information Only

1. Where specified, furnish submittals to the City for information only. The Engineer may, at the Engineer's option, review and comment on any product data.

2. Incomplete or inadequate product data will be returned to the Contractor for resubmittal.

1.07 TRANSMITTAL PROCEDURE

A. General

1. Transmit submittals regarding material and equipment under cover of the City's Standard Cover Sheet. See sample in Appendix A.

2. Use a separate cover sheet for each specific item, class of material, equipment, and items specified in separate, discrete sections, for which the submittal is required.

3. Identify submittal documents common to more than one piece of equipment with all the appropriate equipment numbers.

4. Make submittals for various items with a single cover sheet when the items taken together constitute a manufacturer's package or are so functionally related that expediency indicates checking or review of the group or package as a whole.

5. Assign a unique sequential number on the transmittal form accompanying each item submitted.

a. Use the following format for original submittal numbers: "XXX"; where "XXX" is the sequential number assigned by the Contractor.

b. Use the following format for resubmittals: "XXX-Y"; where "XXX" is the originally assigned submittal number and "Y" is a sequential letter assigned for resubmittals, i.e., A, B, or C being the 1st, 2nd, and 3rd resubmittals, respectively. Submittal 25B, for example, is the second resubmittal of submittal 25.

B. Electronic Submittals

1. Submittals should be submitted electrically to the City, unless otherwise specified.

2. Prepare electronic submittals and Shop Drawings in electronic (*.pdf) format including half-sized and full-sized drawings, catalog information and other required submittal information.

3. Break down submittals that are larger than 10 megabytes into smaller sections, using logical division points to create sections.

4. Electronically bookmark electronic submittals greater than 30 pages in length by major submittal section to facilitate ease of navigation.

C. Paper copy submittals are an acceptable alternative to electronic submittals if the Contractor demonstrates, to the satisfaction of the City, that electronic submittals presents a hardship.

D. Deviation from Contract

1. If the Contractor proposes to provide material, equipment, or method of work that deviates from the project manual, so indicate under "Proposed Deviations" on the transmittal form accompanying the submittal copies.

E. Submittal Completeness

1. Submittals that do not have all the information required to be submitted, including deviations, are not acceptable and will be returned without review.

1.08 SUBMITTAL CONTENT

A. Prepare submittals in compliance with individual Specification Sections and as indicated herein.

B. Shop Drawings:

1. Develop project-specific, scaled drawings to fully identify materials and products that will be provided and their relationship to other products that will be furnished and installed.

2. Do not utilize reproductions of the Contract Documents as the basis for the submittal.

3. Identify products, assemblies, equipment and systems.

4. Provide equipment identification numbers or tag numbers, wiring diagrams, and setting diagrams.

5. Identify critical dimensions.

C. Product Data:

1. Provide information necessary to demonstrate conformance with the specified requirements. Include performance curves, specifications, and wiring diagrams.

2. Product data may consist of manufacturer's standard catalog information and data sheets, marked to indicate the specific products that will be provided.

3. Provide supplemental information as necessary to fully demonstrate how products will be modified from the manufacture's standard products to meet the specification requirements.

D. Manufacturer's Instructions: Written or published information that establishes the manufacturer's recommendations, guidelines and procedures for handling and installation of products, equipment and assemblies.

E. Samples: Mount, display or package samples in a manner that will facilitate review and establish workmanship and quality of materials.

1.09 SUBMITTAL REQUIREMENTS

A. When the Contract Documents require a submittal, submit the specified information as follows:

1. Submittals for Review and Comment:

a. Electronic Submittal: Submit one electronic (*.pdf) submittal.

b. Paper Copy Submittal: If paper copy submittals are required and acceptable to the Engineer, submit two (2) copies of submitted information plus one reproducible original for review unless otherwise specified.

2. Submittals for Information Only:

a. Electronic Submittal: Submit one electronic (*.pdf) submittal.

b. Paper Copy Submittal: If paper copy submittals are required and acceptable to the Engineer, submit two (2) copies of submittal information for review, unless otherwise specified.

1.10 REVIEW PROCEDURE

A. General

1. The Engineer will review submittals within the processing time identified in paragraph “Processing Time” and return:

a. Electronic Submittal – a signed submittal response document, in (*.pdf) format.

b. Paper Copy Submittal – One marked up copies of the submitted copies. The reproducible original will be retained by the Engineer.

B. Submittals for Review and Comment

1. The returned submittal will indicate one of the following actions:

a. **"NO EXCEPTIONS TAKEN"** – The material, equipment or work method complies with the project manual.

b. **"MAKE CORRECTIONS NOTED"** – Limited corrections are required.

1) Provide a corrected copy where:

a) The information is to be included in the O&M data.

b) If requested by the Engineer.

c. **"REVISE AND RESUBMIT"** – The submittal is insufficient or contains incorrect data.

d. **"SUBMIT SPECIFIED ITEM"** – The material, equipment, or work method does not comply with the project manual and is rejected. Submittals with deviations that have not been identified clearly may be rejected.

2. For submittals marked **"NO EXCEPTIONS TAKEN"** or **"MAKE CORRECTIONS NOTED**”.

a. The Contractor may begin implementing the work method or incorporating the material and equipment covered by the submittal in accordance with any noted corrections.

3. For submittals marked **" REVISE AND RESUBMIT"** or **"SUBMIT SPECIFIED ITEM"**

a. Contractor shall provide a typed letter responding to each of the Engineer’s review comments with each resubmittal.

b. Except at its own risk, the Contractor shall not undertake the work covered by such submittals until a new submittal is submitted and returned marked either **"NO EXCEPTIONS TAKEN"** or **"MAKE CORRECTIONS NOTED"**.

C. Submittals for Information Only

1. The returned submittal will indicate **"ACCEPTED FOR RECORD"** if the submittal is complete and adequate.

2. City may return comments on information submittals to identify concerns with what was submitted, in such case, Contractor shall address concerns in writing and return a revised submittal.

1.11 PROCESSING TIME

A. Prepare submittals and transmit to City in sufficient time to allow Engineer's review; manufacture, fabrication or assembly of materials and systems; and shipping of material to the site in time for installation in accordance with the Contractor's schedule.

B. Engineer's time for review will begin upon receipt of a complete and comprehensive submittal containing all required information.

C. Engineer will review submitted information and transmit a response to Contractor within **15 working days** after receipt, subject to the following:

1. In some instances, review times for specific submittals may be modified by the individual specification Section.

2. Resubmittals will be subject to the same review time.

D. No adjustment of Contract Time or Contract Price will be allowed due to delays in the progress of the Work that are caused by rejected submittals and subsequent resubmittals.

1.12 EFFECT OF REVIEW OF CONTRACTOR'S SUBMITTALS

A. The purpose of submittals is to demonstrate how Contractor intends to conform to the Contract Documents and design concepts. Engineer is entitled to rely upon the accuracy and completeness of designs, calculations, or certifications made by licensed professionals whether or not a stamp or seal is required by the Contract Documents.

B. The review procedure is based on the Contractor's guarantee that all features and characteristics not requiring submittals conform to the contract documents.

C. Review of contract drawings, methods of work, or information regarding materials or equipment the Contractor proposes to provide, does not relieve the Contractor of its responsibility for

1. Fulfilling the requirements of the Contract,

2. Proper operation of the equipment,

3. Correction of defective work

D. Reviews shall not be regarded as an assumption of risk or liability by the Engineer or the City.

E. A mark of **"NO EXCEPTIONS TAKEN"** or **"MAKE CORRECTIONS NOTED"** means that the City has no objection to the Contractor, upon its own responsibility, using the plan or method of work proposed, or providing the materials or equipment proposed.

F. The Engineer's review of shop drawings, samples, or test procedures will be only for conformance with design concepts and for compliance with information given in Contract Documents. The Engineer's review does not extend to:

1. Accuracy of dimensions, quantities, or performance of equipment and systems designed by Contractor.

2. Contractor's means, methods, techniques, sequences, or procedures except when specified, indicated on the Drawings, or required by Contract Documents.

3. Safety precautions or programs related to safety which shall remain the sole responsibility of the Contractor.

G. Review of a separate item does not indicate approval of the assembly in which the item functions.

1.13 SUBSTITUTIONS OR "OR EQUAL" ITEMS

A. Named or Sole Source Times

1. Whenever materials or equipment are specified or described in the Contract Documents by using the name of a proprietary item or the name of a particular Supplier, the naming of the item is intended to establish the type, function, and quality required.

2. Unless the name designated a "sole source" and/or is followed by words indicating that no substitution is permitted, materials, or equipment of other Suppliers may be accepted by Engineer if sufficient information is submitted by Contractor to allow Engineer to determine that the material or equipment proposed is equivalent or equal to that named.

B. Initiating Substitution Request

1. To propose to furnish or use a substitute item of material or equipment, Contractor shall use the Proposed "Or Equal" Substitution Submittal Transmittal Form found in Section 01999.

2. Submit the Substitution Submittal form to the City for acceptance, certifying that the proposed substitute will perform adequately the functions and achieve the results called for by the general design, be similar and of equal substance to that specified and be suited to the same use as that specified.

3. State that the evaluation and acceptance of the proposed substitute will not prejudice Contractor's achievement of Substantial Completion on time, whether acceptance of the substitute for use in the Work will require:

a. A change in any of the Contract Documents (or in the provisions of any other direct contract with City for Work on the Project) to adapt the design to the proposed substitute.

b. Incorporation or use of the substitute in connection with the Work is subject to payment of any license fee or royalty.

4. Identify all variations of the proposed substitution from that specified

5. Identify available maintenance, repair, and replacement service

6. Provide an itemized estimate of all costs that will result directly or indirectly from acceptance of such substitute, including costs of redesign and claims of other contractors affected by the resulting change

7. The City or its representative may require Contractor to furnish at Contractor's expense additional data about the proposed substitute.

8. If a specific means, method, technique, sequence or procedure of construction is indicated in or required by the Contract Documents, Contractor may propose to furnish or utilize a substitute means, method, sequence, technique or procedure of construction. Submit sufficient information to allow Engineer to determine that the proposed substitution is equivalent to that indicated or required by the Contract Documents.

C. Review Procedure

1. The procedure for review of substitutions by Engineer will be similar to that provided in this Section.

2. Requests for substitutions may only be submitted by the Contractor.

3. All requests for substitution shall be submitted within thirty (30) calendar days after the date of Notice to Proceed unless the City has agreed in writing to a later submittal date and the Contractor agrees to comply with all conditions of the City for the late submittal.

4. The City's agreement to a later submittal date shall not be construed as favorable review or acceptance of the proposed "or equal" substitution.

5. The Engineer will respond to all requests for substitutions within fifteen (15) working days following receipt of an acceptable substitution submittal, unless the Engineer notifies the Contractor within ten (10) working days after receipt of the proposed "or equal" substitution submittal that more time is needed to complete a thorough review.

6. The City will be the sole judge of acceptability, and no proposed "or equal" substitution item or service will be ordered, installed or utilized without Engineer's prior written acceptance that will be evidenced by either a Change Order or an accepted Shop Drawing.

7. As a condition of acceptance, the City may require Contractor to furnish, at Contractor's expense, a special performance guarantee or other surety with respect to a proposed "or equal" substitution item or service.

D. Modification due to Substitutions

1. All costs for redesign required by the implementation of the proposed substitute shall be borne by the Contractor.

2. All costs associated with incorporating a substitution into the project shall be borne by the Contractor.

END OF SECTION

SECTION 01340

REQUESTS FOR INFORMATION AND CLARIFICATIONS

PART 1 - GENERAL

2.01 SECTION INCLUDES

A. Procedures for submitting requests for information and clarifications when Contractor discovers apparent conflicts, omissions, or errors in the Contract Documents, or upon having any questions concerning interpretation of the Contract Documents.

2.02 REFERENCED SECTIONS

A. The following Section is referenced in this Section

1. General Conditions

2.03 PROCEDURES

A. Notification:

1. Notify the City in writing and request interpretation, clarification, or additional detailed instructions concerning the Work.

2. Ask for clarification or request information immediately upon discovery, but no less than seven working days prior to the start date of the activities related to the clarification, based on the latest updated version of the official contract schedule.

B. Form:

1. Submit requests for clarification and/or additional information in writing to the City using the City's Request for Information (RFI) form.

2. Provide a detailed statement indicating the nature of the information requested. Reference specific Drawings and Specifications as appropriate.

3. Limit each written request to one topic.

4. Electronic (*.pdf) format RFIs are preferred. Prepare RFIs and any attachments in electronic format. Transmit electronic RFIs via email to the City. Break down RFIs that are larger than 10 megabytes into smaller sections, using logical division points to create sections.

5. Hard copy RFIs are an acceptable alternative to electronic RFIs if the Contractor demonstrates, to the satisfaction of the City, that electronic format presents a hardship.

C. Numbering:

1. Use consecutive numbers for each new form submitted. When RFI's are re-submitted to request additional information on the same topic, add a letter A, B, C, etc. to the numbering system for each subsequent RFI until the subject is resolved.

2.04 REASONS FOR SUBMITTING RFI

A. Submit an RFI if one of the following conditions occur:

1. An unforeseen condition or other circumstance that is not described in the Contract Documents.

2. An apparent conflict or discrepancy between portions of the Contract Documents.

3. An apparent omission from the Contract Documents.

4. Information presented in the Contract Documents is unclear or additional details are needed to undertake the Work.

2.05 RESPONSE TIME

A. The City will resolve the RFI and issue instruction to the Contractor within ten (10) working days.

B. Response time may need to be lengthened; or shortened for emergency situations as mutually agreed upon by all parties.

C. Do not proceed with the affected work before receipt of a response from the City. Should the Contractor elect to proceed with the Work affected by the RFI, any portion of the Work that is not done in accordance with the City's interpretation, clarifications, instructions or decisions will be subject to removal or replacement at the Contractor's expense.

2.06 REJECTIONS

A. RFI's submitted by the Contractor may be rejected by the City for the following reasons:

1. The RFI is submitted as a substitute for a submittal.

2. Under the pretense of a Contract Documents discrepancy or omission without thoroughly reviewing the documents.

3. In a manner that suggests that specific portions of the Contract Documents are assumed to be excluded or be taken as an isolated portion of the Contract Documents in part rather than whole.

4. In an untimely manner without proper coordination and scheduling of work or related trades.

2.07 ADDITIONAL DETAILED INSTRUCTIONS (CLARIFICATIONS)

A. The City may furnish additional detailed written instructions to further explain the Work and these instructions shall become part of the Contract Documents. Clarifications will be issued using the above RFI system.

B. When, in the opinion of the Contractor, the Engineer's response in the RFI constitutes additional work beyond the scope of the Contract, the Contractor shall notify the City in writing following receipt of the RFI and prior to initiating the Work affected by the RFI. The process for submitting claims of additional Work shall be followed as defined in the General Conditions. Lack of compliance with this notification requirement will cause Contractor to forfeit any claim for additional compensation or extension of the schedule.

PART 2 - PRODUCTS (NOT USED)

PART 3 - EXECUTION (NOT USED)

END OF SECTION

(THIS PAGE LEFT BLANK INTENTIONALLY)

SECTION 01400

CONSTRUCTION STAKING

PART 1 - GENERAL

1.01 DATUM

A. Vertical and horizontal datum are based on the coordinates and benchmarks shown on the Drawings or as provided by the City prior to the start of construction. Locate and protect City's furnished control points prior to starting the Work and preserve control points during construction. Re-establish control points disturbed by operations at no cost to the City.

B. Establish other vertical and horizontal control from these reference points as required to properly layout and construct the Work. Install connections based on actual elevations of existing structures to which connections are made.

1.02 ACCURACY OF INFORMATION

A. Dimensions for existing structures, piping, paving, and other nonstructural items are taken from the available information provided by the City. Field verifies dimensions and conditions in advance of any construction in the area. Any discrepancy between the field survey by the Contractor and the information indicated in the Contract Documents shall be immediately brought to Engineer's attention by written notification.

1.03 LAYOUT AND MEASUREMENT TO BE PERFORMED BY CONTRACTOR

A. Contractor is responsible for conducting field surveys required to lay out components of the Work at the proper alignment, elevation, grades, dimensions, and distances indicated on the Drawings.

B. Lay out the Work from the lines and grades provided by the City and from the dimensions and elevations provided on the Drawings. Contractor is responsible for measurements required for the execution of the Work.

C. Furnish stakes, equipment, tools, materials, and labor as required for layout work.

PART 2 - PRODUCTS (NOT USED)

PART 3 - EXECUTION (NOT USED)

END OF SECTION

(THIS PAGE LEFT BLANK INTENTIONALLY)

SECTION 01500

CONSTRUCTION FACILITIES AND UTILITIES

PART 1 - GENERAL

1.01 SECTION INCLUDES

A. Requirements for Contractor's temporary facilities at the job site and for the prosecution of the Work.

1.02 CONTRACTOR'S CONSTRUCTION OFFICE

A. Maintain a suitable office at the site.

B. Temporary office will be considered as the headquarters of the Contractor's representative whom is authorized to receive drawings, instructions, or other communication or articles. Any communication given to the representative or delivered at Contractor's temporary office at the site in his absence is deemed to have been delivered to the Contractor.

C. Maintain copies of the Drawings, Specifications, and other Contract documents at Contractor's temporary office at the site and make these available for use at all times.

1.03 ACCESS ROADS AND PARKING AREAS

A. Access Road: The existing AC paved access roads through the Park from McCandless Drive to the well facility are intended to serve the well facility and be large enough to support fire department vehicles. Any damage to the access roads by the well facility contractor shall be repaired at well facility contractor cost.

B. Parking: Contractor shall assume that parking will not be available outside the Work Area.

1.04 STAGING AREA

A. Proposed Large Dog Park Play Area at north of the well site can be used as staging area for the construction of the well facility project. Before starting the work, submit a proposed plan and layout for all temporary offices, sanitary facilities, storage areas, temporary water service and distribution, and temporary power service and distribution.

B. Provide security and facilities to protect the work from unauthorized entry, vandalism, or theft. The contractor may choose to utilize the existing temporary fencing around the well site but is responsible for removing all temporary fencing at their own cost upon completion of the project. The City will not be held responsible for any missing or damaged equipment, tools, or personal belongings.

C. Store only those materials and equipment that are related to the construction within the staging area.

1.05 WORKSHOP AND STORAGE FACILITIES

A. The Contractor shall provide storage facilities for the protection of equipment, materials, supplies and tools, and shall insure that the facilities used for the storage of materials which deteriorate when exposed to moisture is moisture-proof. Workshops and storage facilities shall be located as designated by the City, and shall be clean and in proper order at all times.

1.06 SAFETY AND PROTECTIVE BARRIERS

A. Along shared existing AC paved access road: Install appropriate barriers such as temporary fencing, plastic drums, or concrete traffic barriers to protect public from construction areas and to protect workers and existing facilities from danger of passing vehicles.

B. Temporary Fences:

1. Prior to commencing construction, inspect the existing temporary fencing along the property boundary as shown in the drawing and confirm that it is structurally intact. Repair or replace any damaged or broken fencing as necessary.

2. Maintain work activities within the confines of the temporary fences.

3. Remove temporary fences when work in the vicinity is substantially complete.

C. Provide protective concrete slabs, steel plates or encasements for existing buried facilities that may be damaged by Contractor's equipment and vehicles.

PART 2 - PRODUCTS (NOT USED)

PART 3 - EXECUTION

3.01 TEMPORARY ELECTRIC POWER

A. Contractor shall make provisions to obtain temporary electric power for use during construction. The Contractor shall be responsible for obtaining a source of electric power for construction.

B. Cost of electric power shall be borne by the Contractor.

C. The temporary electric power installation shall meet the construction safety requirements of OSHA, state, and other governing agencies.

3.02 TEMPORARY TELEPHONE SERVICE

A. Provide telephone service at the construction site office. Cellular telephone service is acceptable.

3.03 TEMPORARY SANITARY FACILITIES

A. Provide toilet and wash-up facilities for the construction work force at the site of work.

B. Facilities shall comply with applicable laws, ordinances, and regulations pertaining to the public health and sanitation of construction field offices, dwellings, and camps.

3.04 TEMPORARY WATER SUPPLY

A. Refer to Section 3.8.C – Construction Water in General Requirements for detail information.

END OF SECTION

(THIS PAGE LEFT BLANK INTENTIONALLY)

SECTION 01560

ENVIRONMENTAL CONTROLS

PART 1 - GENERAL

1.01 SECTION INCLUDES

A. Environmental controls to be maintained during construction.

1.02 APPLICABLE LAWS AND REGULATIONS

A. Comply with applicable Federal, State and local environmental, health and safety laws and regulations.

1.03 ENVIRONMENTAL IMPACT MITIGATION MEASURES

A. Comply with all environmental mitigation measures that are included in the Contract Documents. See General Requirements, Appendix B.

1.04 SITE CLEANLINESS

A. Maintain work sites, staging areas, public roadways and private property clean and free of rubbish and debris. Remove materials and equipment from the site when they are no longer necessary for the Work.

B. Keep buildings that are occupied by the Contractor clear of refuse and debris and in a reasonably neat condition.

C. Upon completion of the work and before final acceptance, clear work areas of equipment, unused materials, and rubbish to present a clean and neat appearance.

1.05 HAZARDOUS MATERIALS

A. Handle paints, solvents, and other construction materials with care to prevent contaminants from entering into sewers, storm drains, surface waters, or soils.

B. Develop an emergency response plan for spills of sewage, paint, oil, and other hazardous materials.

C. In the event of a spill, immediately notify the City and jurisdictional agencies. Take proper measures to clean up spills of hazardous materials in accordance with the emergency response plan, State, Federal, and local regulations and manufacturer's recommendations.

1.06 AIR POLLUTION CONTROL

A. Contractor shall not discharge smoke, dust, and other contaminants into the atmosphere that violate the air pollution regulations for the area.

B. Do not idle internal combustion engines for prolonged periods of time.

C. Minimize dust nuisance by cleaning, sweeping and sprinkling work areas, exposed soil, and haul roads with water or by powered brushing.

1.07 NOISE CONTROL

A. Comply with local controls and noise level rules, regulations, and ordinances which apply to any work performed pursuant to the Contract. If the requirements of this Section are

more restrictive than those of the local regulations, the requirements of this Section shall govern.

B. Minimize noise from construction equipment.

1. Whenever possible, utilize construction equipment powered by electric motors rather than diesel or gas driven engines.

2. Locate construction equipment such as compressors and generators as far from sensitive receptors as feasibly possible. Erect temporary sound blankets around noisy equipment to mitigate noise propagation.

3. Equip internal combustion engines with a muffler and provide a noise enclosure around stationary equipment such as engine-driven generators, welders, compressors, and pumps. Use “quiet package” and “hush” equipment.

4. Do not start-up machines or equipment prior to or after the specified construction work hours.

C. Noise Complaints: Should a specific noise impact complaint occur, Engineer has the prerogative to direct Contractor to implement one of the following noise mitigation measures at Contractor’s expense:

1. Relocate stationary construction equipment away from the affected property.

2. Shut off idling equipment.

3. Reschedule construction operations to avoid periods of noise annoyance identified in the complaint.

4. Install temporary or portable acoustic barriers around stationary construction noise sources.

5. Operate electric powered equipment using utility power.

D. Amplified sounds such as telephone, loudspeakers, and other forms of loud communication that constitute a nuisance and potential disturbance shall not be used.

E. See General Requirements, Appendix B for additional construction noise control measures.

1.08 DIRT AND MUD CONTROL

A. Contractor is responsible for preventing dirt, mud, and debris from accumulating on streets, sidewalks, parking areas, or other paved surfaces and for maintaining the cleanliness of these areas.

1. Track Out: Clean vehicle tires of mud and dirt before exiting the site.

2. Cover all dump truck loads and other loads that may result in debris falling from the vehicle.

3. Sweeping Paved Areas:

a. Maintain cleanliness of paved areas used by the Contractor for the duration of the project.

b. Sweep paved areas that have been used since the previous cleaning on at least a weekly basis, or more frequently when directed by the

Engineer. Utilize regenerative air or vacuum pickup sweepers together with proper dust control methods to remove sediment, dust, dirt, and other matter from paved areas. Do not use excessive water resulting in mud on public streets.

1.09 OIL SPILL PREVENTION AND CONTROL

A. Store fuel and oil in accordance with requirements of the Uniform Fire Code and applicable National Fire Protection Association standards.

B. Assume responsibility for the prevention, containment, and cleanup of spilled oil, fuel, and other petroleum products used in the Contractor's operations. Prevention, containment and cleanup costs shall be borne by the Contractor.

C. Periodically inspect fuel hoses, lubricating equipment, hydraulically operated equipment, oil drums, and other devices for drips, leaks or signs of damage. Maintain and properly store to prevent spills and vandalism.

D. Construct dikes around storage tanks, or locate tanks to prevent spills from escaping to surface waters or drainage ditches.

E. Remove oils on land using sand, clay, sawdust or other absorbent material and dispose in an acceptable manner. Store waste materials in drums or other leak proof containers after cleanup and during transport to disposal.

1.10 DISPOSAL OPERATIONS

A. Solid Waste Management

1. Store garbage in covered containers. Empty daily and dispose of waste in sanitary landfill.

2. Provide solid waste transfer containers. Take care to prevent trash from blowing onto adjacent property. Convey contents to a sanitary landfill regularly. Do not allow containers to overflow.

3. Washing of concrete containers where wastewater may reach adjacent property or natural water courses is not permitted. Remove any excess concrete to the sanitary landfill.

B. Chemical Waste

1. Provide containers to store spent chemicals used during construction and startup testing operations.

2. Dispose of chemicals and hazardous materials in accordance with applicable regulations.

C. Excavated Material

1. Comply with requirements in Section 02300.

D.

1. Water used for testing and disinfection may be disposed of into the sanitary sewer through the sewer connection at the project site.

2. Water discharged into the sewer shall be metered. The discharged flow rate into the sewer shall not exceed 250 gpm to prevent overwhelming the sewer system. Provide temporary holding tanks, flow meter, and throttle valves as needed to allow metering the water disposed into the sewer.

3. Under no circumstances shall the wastewater from testing and disinfection be discharged, bypassed, or spilled to creeks, drainage ditches, other waterways, storm drain system, or the ground surface.

    a. In the event of accidental discharge or bypassing caused by the Contractor's operations, the City shall immediately be entitled to employ others to stop the discharge or bypassing without written notice to the Contractor. All cost incurred by the City to stop or prevent the discharge or bypass shall be paid for by the Contractor.

    b. Penalties imposed on and costs incurred by the City as a result of violations caused by the actions of the Contractor, his employees, or subcontractors, shall be borne in full by the Contractor, including legal fees and other expenses to the City resulting directly or indirectly from Contractor's actions.

PART 2 - PRODUCTS (NOT USED)

PART 3 - EXECUTION (NOT USED)

END OF SECTION

SECTION 01600

MATERIALS AND EQUIPMENT

PART 1 - GENERAL

1.01 SECTION INCLUDES

A. Materials, equipment and products incorporated into the work.

1.02 MATERIAL AND EQUIPMENT REQUIREMENTS

A. Specified in individual specification Sections in Divisions 2 through 16.

B. Specifications are minimum requirements and manufacturers' standard products may require modifications to meet the specified requirements.

C. Provide products and equipment with all accessories, trim, finish, safety guards and other devices needed for a complete and operational installation.

D. Products to be supplied in quantity shall be the same product from a single source to provide standardization and interchangeability.

1.03 DEFINITIONS

A. Named Products: Items identified by manufacturer's product name and model number as indicated in the manufacturer's published product data.

B. Materials: Products that are shaped, cut, worked, finished or otherwise fabricated or installed to form a part of the Work.

C. Equipment: A product with working parts, whether motorized or manually operated, that requires connections such as wiring or piping.

1.04 PACKAGING AND MARKING

A. Equipment shall be protected against damage from moisture, dust, handling, or other cause during transport from manufacturer's premises to site. Each item or package shall be marked with the number unique to the specification reference covering the item.

B. Stiffeners shall be used where necessary to maintain shapes and to give rigidity. Parts of equipment shall be delivered in assembled or subassembled units where possible.

C. Bearing housings, vents and other types of openings shall be wrapped or otherwise sealed to prevent contamination by dust and dirt.

1.05 SHIPPING AND DELIVERY

A. Plan, order, coordinate and deliver materials and equipment in accordance with the construction schedule to avoid delays and conflicts with the Work.

B. Deliver anchor bolts and bolt templates sufficiently early to permit setting and placement in structural concrete.

C. Unload products in accordance with the manufacturer's handling instructions. Promptly inspect for completeness and evidence of damage during shipment.

1.06 HANDLING AND STORAGE

A. During the interval between the delivery of equipment to the site and installation, all equipment, unless otherwise specified, shall be stored in an enclosed space affording protection from weather, dust and mechanical damage and providing favorable temperature, humidity and ventilation conditions to ensure against equipment deterioration. Manufacturer's recommendations shall be adhered to in addition to these requirements.

B. Equipment and materials to be located outdoors may be stored outdoors if protected against moisture condensation. Equipment shall be stored at least 6 inches above ground. Temporary power shall be provided to energize space heaters or other heat sources for control of moisture condensation. Space heaters or other heat sources shall be energized without disturbing the sealed enclosure.

C. Fabricated products, pipe and pipe appurtenances shall be handled, stored off the ground on blocking or skids. Pipes with paint, tape coatings, linings or the like shall be stored to protect the coating or lining from physical damage or other deterioration. Pipes shipped with interior bracing shall have the bracing removed only when recommended by the pipe manufacturer.

D. Store loose granular products in well-drained area on a solid surface to prevent mixing with foreign matter. Cover products that are subject to erosion or deterioration with plastic sheeting.

E. Store electrical, instrumentation and control products in a water-tight enclosure to protect against damage from moisture, dust and corrosion.

1.07 PROTECTION OF EQUIPMENT AFTER INSTALLATION

A. After installation, protect equipment from damage from, including but not limited to, dust, abrasive particles, debris and dirt generated by the placement, chipping, sandblasting, cutting, finishing and grinding of new or existing concrete, terrazzo and metal; and from the fumes, particulate matter, and splatter from welding, brazing and painting of new or existing piping and equipment.

B. As a minimum, vacuum cleaning, blowers with filters, protective shielding, and other dust suppression methods will be required at all times to adequately protect all equipment.

C. When sandblasting or when finishing concrete, all equipment that may be affected by cement dust shall be completely covered. Electrical switchgear, substations and motor load centers shall not be installed until after all concrete work and sandblasting in those areas have been completed and accepted and the ventilation systems installed.

D. During painting operations, all grease fittings and similar openings shall be covered to prevent the entry of paint.

PART 2 - PRODUCTS (NOT USED)

PART 3 - EXECUTION

3.01 INSPECTION

A. Prior to installation, inspect materials and equipment for signs of corrosion and other effects of storage. Do not install material or equipment showing such effects.

B. Remove damaged material from the site and expedite delivery of replacement material or equipment. Delays to the Work resulting from material or equipment damage that necessitates procurement of new products will be considered delays that are within the Contractor's control.

3.02 INSTALLATION

A. Handle, install, connect, clean and adjust products in accordance with the manufacturer's instructions.

B. Fill lubricant reservoirs and grease bearings prior to starting equipment. Use lubricants recommended by the manufacturer of the equipment.

C. Recoat painted surfaces that are damaged prior to final acceptance of the Work.

END OF SECTION

(THIS PAGE LEFT BLANK INTENTIONALLY)

SECTION 01610

SEISMIC ANCHORAGE AND BRACING

PART 1 - GENERAL

1.01 SECTION INCLUDES

A. Requirements for seismic anchorage and bracing for equipment, tanks, pipe, ducts, conduit and other nonstructural components.

1.02 REFERENCED SECTIONS

A. The following Sections are referenced in this Section

1. Section 01330 – Submittals
2. Section 01611 – Seismic Design Requirements
3. Section 05501 – Anchor Bolts

1.03 AREAS OF DESIGN RESPONSIBILITY

A. The Contractor shall be responsible for:

1. Designing seismic attachments, braces, and anchors to the structure for tanks, mechanical equipment and electrical equipment included in the Work that weigh more than 20 pounds.
2. Design of seismic anchorage and bracing for piping systems and ventilation ducting.

B. Equipment manufacturers shall provide design calculations and details for their specific pieces of equipment as part of the submittal for that equipment.

1.04 REFERENCES

A. The following is a list of standards which may be referenced in this section.

1. International Code Council (ICC)
2. California Building Code (CBC)
3. Evaluation Service (ICC-ES) Reports and Legacy Reports
4. American Society of Civil Engineers (ASCE): ASCE 7, Minimum Design Loads for Building and Other Structures.

1.05 SUBMITTALS

A. Comply with Section 01330.

B. Seismic Anchorage and Bracing Calculations

1. Submit manufacturer's engineered seismic hardware data and installation requirements.
2. Provide calculations for seismic attachments, braces and anchorages clearly showing the criteria used for the design. Calculations for anchorage of components shall be sealed by a California registered Civil Engineer.

C. Shop Drawings: Show details of seismic attachment assemblies including connection hardware, bracing, and anchor bolts.

1.06 DESIGN AND PERFORMANCE REQUIREMENTS

A. In accordance with CBC, tanks, mechanical and electrical components, and other elements of the Work that are permanently attached to structures shall be designed and constructed to transfer the component seismic forces specified in ASCE 7, Chapter 13 to the structure.

B. Seismic attachments, braces, and anchorages shall be designed in accordance with the provisions of the California Building Code and the site-specific criteria in Section 01611.

PART 2 - PRODUCTS

2.01 MATERIALS

A. Attachments and supports transferring seismic loads to the structure shall be constructed of materials and products suitable for the application and designed and constructed in accordance with the design criteria shown on the Drawings and nationally recognized standards.

B. Powder driven fasteners and sleeve anchors shall not be used for seismic attachments and anchorage where resistance to tension loads is required.

C. Anchor Bolts: In accordance with Section 05501.

PART 3 - EXECUTION

3.01 GENERAL

A. Design seismic anchorage systems to provide restraint in all directions, for each component or system so anchored.

B. Tall and narrow equipment such as motor control centers and electrical control panels shall be anchored at the base and within 12 inches from the top of the equipment.

C. Mechanical and electrical components shall not be attached to more than one element of a building structure at a single restraint location where such elements may respond differently during a seismic event. Such attachments shall also not be made across building expansion and contraction joints.

D. Seismic attachments and braces shall be provided and installed by the Contractor in accordance with the size and number of braces determined by the design calculations prepared by the Contractor.

E. Anchor bolts and concrete and masonry anchors for the anchorage of equipment shall be provided and installed by the Contractor in accordance with the bolt sizing, minimum embedment, and spacing requirements determined by the calculations prepared by the Contractor.

END OF SECTION

SECTION 01611

SEISMIC DESIGN REQUIREMENTS

PART 1 - GENERAL

1.01 SECTION INCLUDES

A. The following primary and secondary structural system elements, non-structural components, and/or equipment supported by structures.

1. Pre-Engineered Metal Buildings and Canopies.
2. Mechanical, electrical, and plumbing equipment and appurtenances.
3. Conduit, piping, cable trays, raceways, ducts and similar systems.
4. Tanks and vessels (include contents), including support systems.
5. Storage racks, suspended ceilings, light fixtures, raised floors, partitions, store-fronts, windows, louvers, architectural features and other non-structural components.

1.02 REFERENCED SECTIONS

A. The following Sections are referenced in this Section

1. Section 01330 – Submittals
2. Section 05501 – Anchor Bolts

1.03 REFERENCES

A. 2022 California Building Code (CBC)

1.04 DEFINITIONS

A. Engineer of Record: The Engineer responsible for the preparation of Contract Documents.

B. Specialty Engineer: Structural or Civil Engineer provided by the Contractor licensed in the State where the project is being built responsible for specific elements of the primary structural system, the secondary structural system, non-structural elements and/or equipment supported by structures.

1.05 GENERAL DESIGN REQUIREMENTS

A. The Contractor is responsible for producing designs that resist the total seismic forces in accordance with the seismic design criteria.

B. The Contractor is responsible for coordinating between the Engineer of Record and the Specialty Engineer.

C. The seismic design for non-structural components and equipment shall be in accordance with the CBC Chapter 16, and the required coefficients and factors for determining the total design seismic forces are provided in the Seismic Design Criteria in Paragraph E below.

D. Coordinate the layout so that adequate space is provided between items for relative motion. Provide additional supports and restraints between items of different systems when necessary to prevent seismic impacts or interaction.

E. Seismic forces shall be determined in accordance with the following seismic design criteria:

1. Site-Specific Spectral Response Coefficients

a. Short Period Mapped Maximum Considered Earthquake, 5 Percent Damped: Ss = 1.833g

b. 1 Second Period Mapped Maximum Considered Earthquake, 5 Percent Damped: S_1 = 0.698g

c. Short Period Design Spectral Response Acceleration, 5 percent Damped: S_{DS} = 1.077g

d. 1 Second Period Design Spectral Response Acceleration, 5 percent Damped: S_{D1} = 2.088g

2. Site Class: E

3. Seismic Design Category: D, unless noted otherwise

4. Risk Category: III, unless noted otherwise

5. Component Importance Factor, Ip:

a. Mechanical and Electrical Equipment: Use 1.5.

b. Tanks and Tank Anchorage: Use 1.5.

c. Components that contain hazardous materials: Use 1.5.

d. Components that are required for life safety: Use 1.5.

e. Components that must remain functional after an earthquake, such as fire protection sprinkler systems: Use 1.5.

6. Do not use more than 60 percent of the weight of tanks and mechanical and electrical equipment for designing anchors for resisting overturning due to seismic forces.

7. Do not use friction to resist sliding due to seismic forces.

1.06 DESIGN REQUIREMENTS FOR PIPING, CONDUIT, AND DUCTS

A. The Contractor is responsible for producing designs for support of piping, conduit, duct or other systems to resist total seismic forces based on the seismic design criteria coefficients specified above, unless shown on the Contract Documents. Except where the technical specifications give specific exemption from resistance of seismic forces, all supports shall be designed to meet seismic criteria.

B. Where possible, pipes, conduit, and their connections shall be constructed of ductile materials (e.g., copper, ductile iron, steel or aluminum and brazed, welded or screwed connections). Pipes, conduits and their connections, constructed of nonductile materials (e.g., cast iron, no-hub pipe and plastic), shall have the brace spacing reduced to one-half of the spacing allowed for ductile material.

C. Seismic restraints may be omitted for the following conditions, where flexible connections are provided between components and the associated ductwork, piping and conduit:

1. Fuel piping less than 1-inch inside diameter.

2. All other piping less than 2.5-inches inside diameter or all piping suspended by individual hangers 12 inches or less in length from the top of the pipe to the bottom of the structural support for the hanger or electrical conduit less than 2.5-inches trade size.

3. All rectangular air-handling ducts less than 6 square feet in cross-sectional area or all-round air-handling ducts less than 28-inches diameter or all ducts suspended by individual hangers 12 inches or less in length from the top of the duct to the bottom of the structural support for the hanger, where the hangers are detailed to avoid bending of the hangers and their connections.

D. All trapeze assemblies supporting pipes, ducts and conduit shall be braced to resist the total seismic forces considering the weight of the elements on the trapeze. Pipes, ducts and conduit supported by a trapeze where none of those elements would individually be braced need not be braced if connections to the pipe/conduit/ductwork or directional changes do not restrict the movement of the trapeze. If this flexibility is not provided, bracing will be required when the aggregate weight of the pipes and conduit exceed 10 pounds/foot. The weight shall be determined assuming all pipes and conduit are filled with water.

E. As an alternative to designing the supports and anchorage, where an approved national standard provides a basis for the earthquake-resistant design, submit standard, data, and details for piping, conduit, duct or other systems:

1. For ductwork, mechanical piping, process piping and electrical conduits, follow Guidelines for Seismic Restraints of Mechanical Systems by SMACNA modified as follows:

a. Seismically brace piping regardless of size or location. Provide transverse braces at all changes in direction and at the end of all pipe runs. Space transverse braces not more than 20 feet apart. Provide longitudinal braces at 40-foot centers.

b. Seismically brace all ductwork regardless of size or location. Provide transverse braces at all changes in direction and at each end of run. Space braces not over 20 feet apart. Provide longitudinal braces at 40-foot centers.

2. For fire protection systems, follow NFPA 13 modified as in Paragraph 1.b above. Ensure that no seismic interaction occurs with items of other systems.

1.07 DESIGN REQUIREMENTS FOR UNDERWATER ITEMS

A. To allow for water sloshing, design rigid items such as piping or equipment supports for twice the lateral force, computed as if the item were above water.

B. Design flexible items to accommodate sloshing motions without damage to rigid machinery.

C. Provide retainers to hold items from falling and damaging rotating equipment below, if bolted connections will fail because of ground motion displacing the supports.

1.08 SUBMITTALS

A. Comply with Section 01330.

B. Shop Drawings

1. Submit signed and sealed structural calculations and detailed drawings for the following listed elements and where required in Divisions 2 through 16 of the primary structural system and their attachments, the secondary structural system and their attachments, permanent non-structural components and their attachments, and the attachments and anchorage for all permanent equipment supported by the structures.

C. Structural calculations and detailed drawings shall be prepared by a Specialty Engineer licensed in the State where the project is being built.

D. Structural calculations and detailed drawings shall clearly show the total design seismic forces which will be transferred from the elements of the structural system, non-structural components, and/or equipment and their attachments to the primary structure.

E. The Engineer's review of items within a Specification Section cannot be completed until all related items have been coordinated and submitted for review.

F. Quality Assurance Submittals

1. Test Reports: Submit test reports for tension testing of anchors.

2. Where required in the equipment specifications in Divisions 2 through 16 submit certification that the equipment itself is designed to resist all internal seismic forces based on the seismic design criteria for the project.

3. Where required in the equipment specifications in Divisions 2 through 16, submit signed and sealed structural calculations and detailed drawings from a specialty Structural or Civil Engineer licensed in the State where the project is being built for the attachments and anchorage to the primary structure.

4. Where required in the equipment specifications in Divisions 2 through 16, submit certification that the attachments and anchorage are designed to resist all seismic forces based on the seismic design criteria for the project.

1.09 QUALITY ASSURANCE

A. Qualifications: The Contractor is responsible for submitting signed and sealed structural calculations and detailed drawings from a Specialty Structural or Civil Engineer licensed in the State where the project is being built.

B. Regulatory Requirements: Comply with the State of California adopted and amended versions of CBC Chapter 16 - Earthquake Design plus clarifications and additions specified in this Section.

PART 2 - PRODUCTS (NOT USED)

PART 3 - EXECUTION

3.01 FIELD QUALITY CONTROL

A. Site Tests: Tension testing of expansion or adhesive anchors utilized for anchorage shall be done in the presence of the special inspector and a report of the test results shall be submitted. See Specification Section 05501 for additional requirements.

B. Inspection: Special inspection shall be provided for high strength bolting or bolts installed in concrete. See Specification Section 05501 for additional requirements.

END OF SECTION

(THIS PAGE LEFT BLANK INTENTIONALLY)

SECTION 01770

CONTRACT CLOSEOUT PROCEDURES

PART 1 - GENERAL

1.01 SECTION INCLUDES

A. Administrative and procedural requirements for contract closeout.

1.02 REFERENCED SECTIONS

A. The following Sections are referenced in this Section

1. General Conditions
2. Section 01780 – Record Documents
3. Section 01782 – Operation and Maintenance Information

1.03 FINAL CLEANING

A. Immediately prior to request for final inspection, clean the project site and make ready for City's use and occupancy.

B. Employ experienced workers or professional cleaners for final cleaning.

C. Complete the following cleaning operations:

1. Clean the project site, yard and grounds which were disturbed by construction activities. Remove rubbish, waste material, litter and other foreign material.
2. Sweep paved areas, remove oil stains, grease, dust and dirt.
3. Remove tools, construction equipment, machinery, storage sheds, temporary fences and surplus material.
4. Broom clean sidewalks and concrete floors.
5. Vacuum carpets, spot clean or if necessary, shampoo to remove visible soil or stains.
6. Clean glass in doors and windows, remove glazing compounds, replace chipped and broken glass, clean door and window frames.
7. Patch, touch up and repair marred surfaces and finishes. Replace finishes and surfaces that cannot be satisfactorily repaired or restored.
8. Wipe surfaces of mechanical and electrical equipment, remove excess lubrication, paint splatter and mortar droppings.
9. Clean plumbing fixtures and mirrors.
10. Clean light fixtures, lamps and bulbs. Replace burned-out bulbs and defective or noisy starters in fluorescent and mercury vapor fixtures.

1.04 FINAL INSPECTION

A. Complete final cleaning operations before requesting final inspection.

B. Prior to requesting final inspection, complete and submit the following:

1. List of items to be completed or corrected (punch list). Organize list by facility, space, system and piece of equipment.

2. Specific warranties, bonds, maintenance service agreements, final certifications and similar documents.

3. Delivery of spare parts, special tools, extra materials and similar items to designated locations.

4. Make final changeover of permanent locks and deliver keys to City.

C. During Final Inspection:

1. City, Engineer and Contractor shall jointly walk through and inspect the project site to determine whether the Work is satisfactory and Substantially Complete.

2. The Contractor's punch list will be reviewed and additional items identified during the inspection requiring corrective actions will be added to the list as determined by the inspection.

1.05 FINAL COMPLETION

A. Final Completion Submittals:

1. Prior to submitting final Application for Payment, complete and submit the following:

a. Project Record Drawings. Refer to Section 01780.

b. Guaranty and Warranties.

c. Operation and Maintenance Information. Refer to Section 01782.

d. Punch List with all corrective actions completed and ready for Final Inspection.

e. Releases from Agreements with property Citys or public agencies.

f. Releases or Waivers of Liens and Claims.

g. Evidence of final, continuing insurance coverage complying with insurance requirements.

h. Consent of Surety to Final Payment.

B. Final Acceptance:

1. Engineer will either proceed with the inspection or advise Contractor of unfulfilled requirements.

2. City will execute and file a Notice of Completion with the County of Santa Clara, constituting final acceptance and completion of the Project.

1.06 FINAL APPLICATION FOR PAYMENT

A. Following a satisfactory Final Inspection and Notice of Completion, Contractor shall submit the final Application for Payment in accordance with the procedures and requirements specified in the General Conditions, Article 43 (C) – Final Payment.

PART 2 - PRODUCTS (NOT USED)

PART 3 - EXECUTION (NOT USED)

END OF SECTION

(THIS PAGE LEFT BLANK INTENTIONALLY)

SECTION 01780

RECORD DOCUMENTS

PART 1 - GENERAL

1.01 SECTION INCLUDES

A. Requirements for maintaining a set of Record Documents, including maintaining Record Drawings that are regularly updated to depict actual conditions in the field and changes in the work.

1.02 REFERENCED SECTIONS

A. The following Section is referenced in this Section:

1. Section 01330 – Submittals

1.03 SUBMITTALS

A. Comply with Section 01330.

B. Submit Record Drawings for review upon request for Substantial Completion.

C. Submit Project Record Documents in accordance with Paragraph 1.07.

1.04 GENERAL REQUIREMENTS

A. The Contractor shall maintain Project Record Documents to provide up-to-date, factual information regarding all aspects of the Work, both concealed and visible.

B. Record Drawings shall be updated weekly. Progress payments may be delayed until Record Drawings are updated to meet requirements to date and provided progress Record Drawings upon pay request.

1.05 MAINTENANCE OF RECORD DOCUMENTS

A. Maintain at the Project site, available to the City and Engineer, one (1) copy of following record documents to be turned over to the City upon request for Substantial Completion:

1. Record copy of Contract Documents.
2. Change Orders and other modifications to the Contract.
3. Requests for Information.
4. Clarification Letters.
5. Field Instructions and other written instructions from City's Representative.
6. Reviewed shop drawings, product data, and samples.
7. Test reports.
8. Training material.
9. Claims.

B. Store record documents and samples in Contractor's field office apart from documents used for construction. Label documents with **"RECORD DOCUMENTS"** in neat, large, printed letters.

C. File documents and samples in a manner acceptable to the City's Representative.

D. Make documents and samples available at all times for inspection by the City's Representative.

1.06 MAINTENANCE OF RECORD DRAWINGS

A. Record Drawings are documents maintained and annotated by the Contractor during construction to illustrate the final Work, as constructed.

B. Record Drawings shall be full size and maintained in a clean and legible condition.

C. Do not use the Record Drawing set for construction purposes.

D. Marking of the Record Drawings shall be kept current and shall be done at the time the material and equipment are installed.

1. Record actual depths, horizontal and vertical locations of underground pipes, duct banks, or other buried utilities. Reference dimensions to permanent surface features.

E. Mark on the Record Drawings any field changes and detailed information contained in submittals and change orders. Update the document within 24 hours after receiving information that a change has occurred, or clarification has been issued.

F. When the configuration and arrangement of the Work is changed from that indicated on the Contract Drawings or specified in the Project Manual, the authorizing document for the change, such as a Request for Information, Change Order, Shop Drawing, or Field Order, shall be clearly referenced on the Record Drawings as a comment.

G. Make annotations in erasable colored pencils conforming to the following color code:

1. Additions: Red

2. Deletions: Green

3. Comments: Blue

4. Dimensions: Graphite

H. "Cloud" all affected areas.

I. Supplement the Record Drawings with detailed layout sketches, schedules, installation drawings and fabrication drawings.

1.07 FINAL PROJECT RECORD DOCUMENTS

A. Submit a copy of the Record Drawings to the City upon request for Final Completion.

B. Participate in review meetings with the City and Engineer, as required.

C. Promptly incorporate any changes to the Record Drawings.

D. Submit the final Project Record Documents to the City.

1. Accompany submittal with transmittal letter as specified in Section 01330.

2. Include a signed certification that each document, as submitted, is complete and accurate.

3. Stamp each sheet of the Final Record Drawings with the following information:
    a. Project Record Document.
    b. Prepared by: Contractor's name, permanent address.
    c. Date prepared.
    d. Contractor's signature.

PART 2 - PRODUCTS (NOT USED)

PART 3 - EXECUTION (NOT USED)

END OF SECTION

(THIS PAGE LEFT BLANK INTENTIONALLY)

SECTION 01782

OPERATIONS AND MAINTENANCE INFORMATION

PART 1 - GENERAL

1.01 SECTION INCLUDES

A. Operation and maintenance (O&M) information to be provided for each maintainable piece of equipment, equipment assembly or subassembly, and materials included in the Work.

1.02 REFERENCED SECTIONS

A. The following Sections are referenced in this Section

1. Section 01330 – Submittals
2. Section 01820 – Training
3. Section 01999 – Reference Forms

1.03 SUBMITTALS

A. Submit in accordance with Section 01330.

B. Submit preliminary O&M manuals in electronic format.

1. Refer to "Format Requirements – Electronic Copies" below.
2. Include all material in final O&M manual except startup and field testing information.
3. Engineer and City will review manuals. Make additions and revisions in accordance with review comments.

C. Submit final O&M manuals in hard-copy and in electronic format on CD or DVD.

1. Include startup and field testing information.
2. Submit two (2) final hard copy O&M Manuals and one (1) electronic copy on CD or DVD for review. Hard copies will be returned to Contractor.
3. Provide five (5) approved O&M manuals and two (2) copies on CD or DVD to City.

D. O&M Manuals must be submitted and accepted before on-site training, specified in Section 01820, may start.

E. Submittals that are not fully indexed and tabbed with sequentially numbered pages may be returned without review.

F. Complete and submit O&M Information Transmittal (See Section 01999) with each Manual.

G. Deferred submittal parts, which need not be included with final manuals, but shall be included with approved manuals:

1. Master Volume Index as specified in Paragraph 2.01
2. Include test reports as specified in Paragraph 2.05 in final O&M manuals.

3. Include forms required during startup and training in final O&M manuals.

4. Include completed Equipment Record Forms with equipment serial numbers, as specified in Paragraph 2.02, in final O&M manuals.

PART 2 - PRODUCTS

2.01 GENERAL

A. Each O&M Manual shall provide instructions and procedures for all aspects of equipment installation, operation, and maintenance including: delivery, handling, storage, maintenance during storage, assembly, erection, installation, startup, adjusting, testing, operating, shutdown, troubleshooting, maintenance, and as may otherwise be required.

B. Organize information in a consistent format under separate headings for each different procedure, with a logical sequence of instructions for each procedure.

C. Where manufacturers' standard pre-printed manuals are included in O&M Manuals, mark to reflect only the model or series of equipment used on the Project. Neatly cross out non-applicable material.

D. Master Volume Index

1. Provide a neatly typewritten master index of all O&M manuals.

2. List each manual as Volume __of __.

3. Include a copy of the index at the front of each manual. Clearly call out the manual in the index.

2.02 FORMAT REQUIREMENTS – GENERAL

A. Cover: Provide a cover page and include the following information:

1. OPERATION AND MAINTENANCE MANUAL, VOLUME NO. _ OF _

2. Project Name

3. City Project Number

4. Specification Number(s)

5. Equipment Name(s)

6. Equipment Tag Numbers

B. Title Page: Provide a title page at the front of each Equipment O&M Manual containing the following information:

1. City Name and Project Name

2. Equipment Name

3. Specification Section

4. Equipment Tag Numbers

5. Equipment Model Numbers

6. Equipment Serial Numbers

7. Names, addresses, telephone numbers and individuals to contact for the manufacturer, the nearest representative of the manufacturer, and the nearest supplier of the manufacturer's equipment and parts

8. Engineer name, address, and telephone number

9. Contractor, name of responsible principal, address, and telephone number.

10. Date

C. Table of Contents

1. Number each page of O&M Manuals and provide a typed table of contents with page numbers at the front of each O&M Manual.

2. Divide the O&M Manuals into major sections and subsections, to allow easy location of material. At a minimum, list each major section in the table of contents.

3. Provide a fly sheet for each major section listed in the table of contents, with section title printed on fly sheet.

D. Section 1: Reserve Section 1 of the manual for the following:

1. Equipment Record Forms (Section 01999 and Division 16)

a. Fill out by machine. Hand entries will not be allowed.

b. Include all required information. The Equipment Record Form is intended as an easily accessible quick reference for plant operation and maintenance personnel.

c. Equipment record sheet for electrical/instrumentation equipment shall be as specified in Division 16. Include a complete list of items supplied, including serial numbers, ranges, options, and other pertinent data necessary for ordering replacement parts.

2. Startup forms required by individual specification sections. These may include but are not limited to the following forms in Section 01999:

a. Equipment Test Report

b. Manufacturer's Representative Service Report

c. Manufacturer's Installation Certification Form

d. Manufacturer's Instruction Certification Form

E. Presentation of Data

1. Include only those sheets that are pertinent to the specific product.

2. Annotate each sheet to:

a. Clearly identify the specific project or part installed.

b. Clearly identify the data applicable to the installation.

c. Cross-out references to inapplicable information.

3. Identify each product by product name and other identifying numbers or symbols as set forth in Contract Documents.

4. Material shall be suitable for reproduction, with quality equal to original. No scanned or faxed copies of standard published manuals and product data available from manufacturers will be allowed.

F. Text

1. Manufacturer's printed data properly edited for project. Cross out all data that does not apply to the equipment to be furnished. Clearly annotate to identify applicable product, part, or data.

2. Documents shall be machine typed; hand written documents are not acceptable. Documents shall be legible and original size, documents that cannot be read or have been reduced will be returned for correction.

2.03 FORMAT REQUIREMENTS – HARD COPIES

A. Binders

1. Bind Equipment O&M Manuals in heavy duty hard cover three-ring "Slant D" binders with clear vinyl overlay pocket on binder front and spine, Avery Dennison, Heavy Duty, EZD, View Binder or equal.

2. Insert cover page specified above into clear pocket on the front of each binder.

3. Provide with heavy plastic-coated section dividers with numbered plastic index tabs.

4. Include plastic sheet lifters prior to first page and following last page.

B. Spine Label

1. Provide a spine label to be inserted into the clear pocket on the spine of each binder. Include the following information on the spine label:

a. Equipment Name(s)

b. Specification Number(s)

c. Equipment Tag Numbers.

d. Appendix number and/or volume number

C. Drawings

1. Drawings reduced to 11-inch by 17-inch are acceptable if they are clear and readable, and are neatly and individually double-folded to 8-1/2-inch by 11-inch size. Drawing title shall be visible in lower right hand corner of the original and folded drawing. Reinforce binding edge with clear Mylar strip.

2. Larger drawings or illustrations are acceptable if neatly folded and individually placed in an 8-1/2-inch by 11-inch clear plastic pocket which fits in the binder. Only one drawing or illustration shall be placed in each pocket. Drawing title shall be visible in lower right hand corner of the original and folded drawing.

D. Additional formatting requirements:

1. Paper Size: 8-1/2 inches by 11 inches, except as noted below.

2. Paper: 20-pound minimum, white for typed pages.

3. Arrange printing so that punched holes do not obliterate data and use hole reinforcements for bound in plan sheets.

2.04 FORMAT REQUIREMENTS - ELECTRONIC COPIES

A. Include all information in the hard-copy Operation and Maintenance Manuals.

B. Insert fly sheets as specified above at the location of tabbed section dividers.

C. Provide as a single, searchable PDF file. Generate PDF files from original documents to enable text searches.

D. The files shall become the property of the City for use in training programs and other uses.

2.05 CONTENTS OF MANUALS

A. Product Data

1. Provide manufacturer's catalog data indicating equipment and accessories provided for the Project. Include only those sheets that are pertinent to the products supplied and delete references to inapplicable information.

2. Supplement product data with drawings as necessary to clearly illustrate relations of component parts of equipment and systems.

3. Provide "As Constructed" submittal shop documents, data sheets, and drawings, including all items in the electrical/instrumentation system as specified in Division 16. Contract documents shall not be used as "As Constructed" drawings.

B. Drawings

1. Supplement product data with drawings as necessary to clearly illustrate:

a. Relations of component parts of equipment and systems. Include individual parts list with exploded views for all equipment.

b. Control and flow diagrams.

2. Coordinate drawings with information in project contract documents to assure correct illustration of completed installation.

C. Equipment Description

1. Theory of Operation.

2. Description: Provide description of unit and component parts functions, normal operating characteristics, and limiting conditions.

a. Include descriptive bulletins, brochures, or catalog sheets to describe the equipment.

b. Include performance curves, engineering data, and test results.

D. Procedures

1. Safety Procedures: Manufacturer's safety procedures for operating and maintaining all equipment and materials used. List personnel hazards and safety precautions for all operating conditions.

2. Shipping and Installation Procedures

a. Receiving and handling.

b. Short-term storage, long-term storage and maintenance during storage.

c. Complete step-by-step installation instructions for all components.

d. Startup, adjusting and testing.

E. Operating Instructions

1. Provide complete, detailed, written description of the sequence of operations for all operations in all modes. Prepare specifically for this work and reference to control diagrams and system components.

a. Recommended step-by-step pre-start, startup, adjustment, calibration, and break-in operating instructions.

b. Recommended step-by-step regulation and control instructions for routine operation. Include summer and winter operating instructions as applicable. Include any special operating instructions.

c. Recommended step-by-step stopping, shut-down, and post-shutdown instructions.

2. Staff Service Requirements: Provide instructions for services to be performed by the staff such as lubrication, adjustments, and inspection.

3. Current and desired control settings.

4. Emergency Procedures.

a. Provide emergency procedures for equipment malfunctions to permit a short period of continued operation or to shut down the equipment to prevent further damage to systems and equipment.

b. Include emergency shutdown instructions for fire, explosion, spills, or other foreseeable contingencies.

F. Preventive Maintenance Information

1. Preventive Maintenance Plan and Schedule

a. Provide manufacturer's schedule for routine preventive maintenance, inspections, tests, and adjustments required to ensure proper and economical operation and to minimize corrective maintenance and repair.

b. Provide manufacturer's projection of preventive maintenance man-hours on a daily, weekly, monthly, and annual basis.

2. Lubrication information

a. Lubrication schedule showing service interval frequency

b. Table showing recommended lubricants for specific temperature ranges and applications

1) For each required lubricant, provide a list of acceptable equivalents from at least one different major manufacturer whose products are locally available.

c. Include a schematic diagram of the equipment showing lubrication points, recommended types and grades of lubricants, and capacities

3. Additional requirements

a. Include procedures for disassembly, assembly, alignment, adjusting, and checking.

b. Provide manufacturer's printed maintenance instructions.

c. Include illustrations, assembly drawings, and diagrams required for maintenance.

G. Corrective Maintenance Information

1. Corrective maintenance to include disassembly, repair, overhaul and re-assembly.

2. Provide manufacturer's step-by-step trouble shooting and diagnostic procedures to promptly isolate the cause of typical malfunctions. Describe clearly why the checkout is performed and what conditions are to be sought. Identify tests or inspections and test equipment required to determine whether parts and equipment may be reused or require replacement

3. Provide manufacturer's step-by-step procedures and list required tools and supplies for removal, replacement, disassembly, and assembly of components, assemblies, subassemblies, accessories, and attachments. Provide tolerances, dimensions, settings, and adjustments required. Instructions shall include a combination of text and illustrations

4. Wiring diagrams and control diagrams shall be point-to-point drawings of wiring and control circuits including factory-field interfaces. Provide a complete and accurate depiction of the actual job-specific wiring and control work. On diagrams, number electrical and electronic wiring and pneumatic control tubing and the terminals for each type identically to actual installation numbering.

5. Provide manufacturer's instructions and list tools required to restore product or equipment to proper condition or operating standards

6. Provide manufacturer's projection of corrective maintenance man-hours including craft requirements by type of craft.

H. Electrical and Instrumentation Information

1. Electrical & Instrumentation Drawings shall include as-built information per Division 16 for the project. As-built drawings shall be signed and stamped by an electrical engineer registered in the State of California.

2. Complete software ladder logic printouts.

3. Record of all settings or parameters for all programmable devices.

4. At the end of the project these manuals shall be updated to show "as-built" or "as-installed" conditions, including any field changes.

I. Parts Identification

1. Provide full identification and listing of all parts of each component, assembly, subassembly, and accessory.

    a. Identify parts by make, model, serial number, and source of supply to allow reordering without further identification.

    b. Provide clear and legible illustrations, drawings, and exploded views to enable easy identification of the items. When illustrations omit the part numbers and description, both the illustrations and separate listing shall show the index, reference, or key number which will cross reference the illustrated part to the listed part.

2. Include schematic diagrams of all electronic devices. Provide a complete parts list with stock numbers for the components that make up the assembly.

3. Include special hardware requirements, such as requirement to use high-strength bolts and nuts.

4. Include control and flow diagrams and panel wiring diagrams.

5. Coordinate drawings to ensure correct illustration of completed installation.

J. Spare Parts

1. Provide lists of spare parts and supplies required for maintenance and repair to ensure continued service or operation without unreasonable delays.

    a. Manufacturer's recommended spare parts list with manufacturer's current prices.

    b. Include complete nomenclature and commercial numbers of replaceable parts.

    c. List spare parts and supplies that have a long lead-time to obtain.

    d. Provide a table showing the predicted life of parts subject to wear.

2. Include the spare parts list on Equipment Record Forms A and B (Section 01999).

K. Test Data

    a. Provide copies of factory test reports as specified in the applicable equipment sections.

    b. After field testing is completed, include field test data.

    c. Include performance curves and engineering data.

L. Additional Information

1. Provide any information not specified in the preceding paragraphs but pertinent to the maintenance or operation of the product or equipment. Examples include:

    a. Information on test equipment required to perform specified tests and on special tools needed for the operation, maintenance, and repair of components.

    b. Instances that might affect the validity of Warranties or Bonds

2.06 APPENDICES

A. Submittals

1. Include a copy of all approved submittals.

B. Warranty Information

1. List and explain the various warranties and include the servicing and technical precautions prescribed by the manufacturers or contract documents to keep warranties in force.

C. Personnel Training

1. Provide information available from the manufacturers to use in training designated personnel to operate and maintain the equipment and systems properly.

2. Refer to Section 01820 for additional training information.

2.07 COMPUTERIZED MAINTENANCE MANAGEMENT SYSTEM

A. Collate and submit information on the new and modified equipment, specialties, electrical, and instrumentation installed during the Project, for potential import into a Computerized Maintenance Management System (CMMS).

B. Data Format

1. Submit equipment and instrument information in a database file format suitable for direct import to an SQL-based relational database management system, without additional data manipulation.

2. The acceptable format is Microsoft Excel file format.

3. Format data in row (equipment name or tag) and column (equipment, name, tag, description, and various features as noted herein) so that it can be added to the SCADA database.

C. Data Content

1. Maintenance information to be provided shall include all equipment information relevant to a reliability-centered maintenance program.

2. File and file name of electronic (PDF version) of equipment manual.

3. The spreadsheet information shall include, but is not limited to, the following:

a. General information required for all equipment:

1) Equipment or instrument name, model number, serial number

2) Equipment or instrument tag numbers

3) Description

4) Equipment cost

5) Manufacturer and local representative name and contact information

6) Dates of purchase, installation and commissioning

7) List of spare parts, including part number, quantity, name and cost

8) Required inspections and frequency

9) Required preventive maintenance procedures and frequency

b. Mechanical equipment information:

1) Lubrication information, including lubrication points, frequency of lubrication, and recommended lubricants

2) Replaceable wear components and recommended replacement intervals

c. Electric motor information:

1) Frame number

2) Horsepower

3) Amperages

4) Voltage, frequency, number of phases

5) RPM

6) Service factor

7) Duty

8) NEMA design code

9) Insulation class

10) Ambient temperature rating

11) Temperature rise

D. Submittal Requirements

1. Submit a complete draft electronic copy of the equipment and instrument information database for City review at least three (3) months prior to the project acceptance.

2. The City will provide comments on the draft database within then (10) Working Days of receipt. City comments on subsequent drafts of the equipment and instrument information database will be provided within five (5) Working Days of receipt, provided that major revisions requiring additional review time have not occurred.

3. The equipment and instrument information database shall not be considered complete until approved by the City. Approval will not be unreasonably withheld.

4. Following review and approval, the Contractor shall submit one (1) electronic copy of the equipment and instrument information database to the City.

PART 3 - EXECUTION (NOT USED)

END OF SECTION

SECTION 01810

STARTING AND ADJUSTING

PART 1 - GENERAL

1.01 SECTION INCLUDES

A. Requirements for start-up, adjusting, and process/functional testing.

1.02 REFERENCED SECTIONS

A. The following Sections are referenced in this Section

1. Section 01330 – Submittals
2. Section 01820 – Training
3. Section 01825 – Equipment and System Testing
4. Section 01999 – Reference Forms
5. Section 16010 – Electrical

1.03 DEFINITIONS

A. Manufacturer's Representative – Authorized service division employee of the manufacturer.

1.04 SUBMITTALS

A. Comply with Section 01330.

B. Start-up Plan, Forms, and Schedule: Prepare a facility start-up plan and schedule. The plan shall include test methods and procedures, list of data that will be recorded and records that will be kept, and sample forms for recording test data. Submit facility start-up plans for approval no less than 21 days before initial start-up of equipment or systems begin.

C. Forms and Certifications: Submit the following forms and certifications:

1. Supplement 01810-A, "Process Control Test Certification"
2. Supplement 01810-B, "Functional Test Certification"
3. Instrumentation Data and Calibration Test Form and testing instrument certification. (Section 01999)
4. Manufacturer's Installation Certification Form after the manufacturer's Field Representative has completed the specified field services and testing. Submit the certification prior to Manufacturer's Representative leaving the plant site. (Section 01999)

1.05 START-UP PLAN

A. Develop a specific plan and schedule for testing and start-up activities required for the project and submit to the City for approval no less than 21 days before the initial start-up of equipment begins.

B. The plan shall, as a minimum, incorporate the activities itemized below.

1. Complete all work associated with the installations of the unit and related processes before start-up activities begin.

2. Manufacturer’s representative shall certify the installation meets manufacturer’s recommendations and instructions.

3. Manufacturer’s representative shall certify equipment operates as specified and as shown in the Contract Documents.

4. Calibrate instruments. Submit an Instrumentation Data and Calibration Test Form. See Section 01999 for a sample form showing the format and level of detail required for the documentation form. Submit certification that test instruments used in the testing procedure have been calibrated to an acceptable and recognized standard.

5. Contractor’s independent process control test certification verification.

6. Contractor’s demonstration of the process control test certification to the Engineer. Operation and maintenance manuals shall be available during this activity.

7. Contractor’s independent functional test certification verification.

8. Contractor’s demonstration of the functional test certification to the Engineer.

9. Submit records kept during start-up and adjusting activities.

10. Submit Manufacturer's Installation Certification Forms (Section 01999) after the manufacturer's Field Representative has completed the specified field services and testing and prior to Manufacturer's Representative leaving the plant site.

11. Show Trainings, Commission Test, and Operational Test on the schedule included in the Start-up Plan. See Section 01820 and Section 01825.

12. Contractor shall provide sufficient time in the progress schedule to accommodate the start-up sequences.

C. Include forms for recording test data.

1.06 MANUFACTURER’S REPRESENTATIVE RESPONSIBILITIES

A. Manufacturer’s representative shall inspect the installation and certify with a written report that the installation meets the requirements of the Contract Documents as well as the Manufacturer’s recommendations. This shall be done before the equipment is energized.

B. At completion of a manufacturer’s representatives’ start-up and testing activities, they each shall furnish a written report certifying the equipment installation meets the following conditions.

1. Has been properly installed to meet the IBC seismic requirements and has been adjusted, aligned and lubricated as required.

2. Is free of any stresses imposed by connecting piping or anchor bolts.

3. Is suitable for satisfactory full time operation under full load conditions.

4. Operates within the allowable limits for vibration.

5. Controls, protective devices, instrumentation and control panels furnished as part of the equipment package are properly installed, calibrated and functioning.

6. Control logic for start-up, shutdown, sequencing, interlocks and emergency shutdowns have been tested and are functioning properly.

PART 2 - PRODUCTS – NOT USED

PART 3 - EXECUTION

3.01 GENERAL REQUIREMENTS

A. Demonstrate proper function of all equipment, systems and control devices. Each item of mechanical, electrical, and instrumentation equipment installed under this Contract shall be tested by the Contractor to demonstrate compliance with the performance requirements of this project.

B. Furnish labor, process medium, chemicals, tools, equipment, instruments, and services required for, and incidental to, completing start-up and adjusting activities. Furnish and install temporary valves, gauges, piping, and other materials required to conduct the specified tests.

C. Manufacturer's representative shall provide assistance for assembly and installation as well as testing guidance and troubleshooting during the start-up and adjusting activities.

D. Complete Supplement 01810-A, "Process Control Test Certification" and submit the completed form to the Engineer for approval. The submission and approval of this form is required prior to commencing with the Contractor's demonstration to the Engineer that each process itemized in the Process Control Test Certification operates as specified and designed.

3.02 MECHANICAL, ELECTRICAL, AND INSTRUMENTATION ADJUSTMENTS

A. Complete the following mechanical adjustments prior to, or during, the Contractor's initial start-up and adjusting activities and before demonstration to the Engineer.

1. Remove rust preventatives and oils applied to protect equipment during construction.

2. Flush lubrication systems and dispose of flushing oils. Recharge lubrication system with lubricant recommended by manufacturer.

3. Install and adjust packing, mechanical seals, O-rings, and other seals. Replace defective seals.

4. Remove temporary supports, bracing and other foreign objects installed to prevent damage during shipment, storage and erection.

5. Check rotating machinery for correct direction of rotation and for freedom of moving parts before connecting driver.

6. Perform cold alignment and hot alignment to manufacturer's tolerances.

7. Adjust belt tension and variable pitch sheaves.

8. Inspect hand and motorized valves for proper adjustment. Tighten packing glands to ensure no leakage, but permit valve stems to rotate without galling. Verify valve seats are positioned for proper flow direction.

9. Tighten leaking flanges or replace flange gasket. Inspect screwed joints for leakage.

10. Install gratings, safety chains, handrails, shaft guards and sidewalks prior to operational testing.

B. Complete the following electrical and control adjustments prior to, or during, the Contractor's initial start-up and adjusting activities and before demonstration to the Engineer.

1. Perform insulation resistance tests on all conductors operating at or above 200 volts.

2. Perform continuity tests on all conductors.

3. Test and set circuit breaker relays and circuit breaker trip settings for proper operation. Coordinate the trip settings for all circuit breakers.

4. Check and record motors for actual full load amperage draw on each phase and compare to nameplate value. Submit results to Engineer.

C. Complete the following instrumentation adjustments prior to, or during, the Contractor's initial start-up and adjusting activities and before demonstration to the Engineer.

1. Field calibrate instruments and make required adjustments and control point settings.

2. Leak test pneumatic controls and instrument air piping.

3. Energize transmitting and control signal systems, verify proper operations, ranges and settings.

3.03 CONTRACTOR'S INDEPENDENT PROCESS CONTROL TEST CERTIFICATION VERIFICATION

A. Verify the equipment provided is installed correctly and functions properly.

B. Complete Supplement 01810-A, "Process Control Test Certification" pursuant to the following.

1. The supplement is not intended as a replacement for a systematic check of all the requirements specified.

2. Complete the tests outlined in the Supplement, fill out the form and sign it certifying that the tests have been successfully performed and the results recorded.

3. Where it is not possible to test a function without the software furnished, the Contractor shall verify the inputs/outputs (I/O's) are terminated correctly by simulating the process as closely and to the extent possible and checking the I/O terminations for voltage and continuity.

C. Submission of the completed Supplement to the Engineer and approval of the submission are a prerequisite to the Contractor's demonstration of process control test certification to the Engineer.

3.04 CONTRACTOR'S DEMONSTRATION OF PROCESS CONTROL TEST CERTIFICATION TO THE ENGINEER

A. The intent of the demonstration of the operation to the Engineer is to ascertain the installation, including the hardwired control, are in compliance with the Contract Documents. Successful completion of this step will facilitate efficient demonstration of the complete operations of the facilities when the configured control software is installed and tested as part of the Functional Test Certification.

B. Demonstrate compliance with the items listed in Supplement 01810-A.

C. Engineer may require the Contractor to demonstrate functions or processes in addition to those itemized in Supplement 01810-A.

D. Engineer's approval of the demonstration of the process control test certification is required before the Functional Test Certification phase commences.

3.05 CONTRACTOR'S INDEPENDENT FUNCTIONAL TEST CERTIFICATION VERIFICATION

A. Complete Supplement 01810-B, "Functional Test Certification" pursuant to the following.

1. Complete the tests outlined in the Supplement, fill out the form and sign it certifying that the tests have been successfully performed and the results recorded.

2. This test will be conducted with the configured software installed and functional. Alarms, data logging, trending and control functions shall be verified

B. Submission of the completed Supplement to the Engineer and approval of the submission are a prerequisite to the Contractor's demonstration of functional test certification to the Engineer.

3.06 CONTRACTOR'S DEMONSTRATION OF THE FUNCTIONAL TEST CERTIFICATION TO THE ENGINEER

A. The intent of the demonstration of the Functional Test Certification to the Engineer is to ascertain the installation, including the configured software program, is in compliance with the Contract Documents.

B. Demonstrate items listed in Supplement 01810-B, "Functional Test Certification" to the Engineer.

C. Engineer may require the Contractor to demonstrate functions or processes in addition to those itemized in Supplement 01810-B.

D. Engineer's approval of the demonstration of the Functional Test Certification is a prerequisite to beginning the commissioning phase.

3.07 RECORD KEEPING

A. Contractor shall maintain, as a minimum, the following records generated during the start-up and adjusting activities.

1. Daily logs of equipment and process testing, identifying all tests conducted and a summary of the results.

2. Logs of time spent with manufacturer's representatives providing services for the project.

3. Equipment lubrication records.

4. Electrical phase voltage and amperage measurements for all equipment.

5. Insulation resistance measurements.

B. All completed test forms specified in Section 16010.

3.08 SUPPLEMENTS

A. Supplement 01810-A, “City of Milpitas McCandless Well Facility Process Control Test Certification”.

B. Supplement 01810-B, “City of Milpitas McCandless Well Facility Functional Test Certification”.

END OF SECTION

SUPPLEMENT 01810-A
CITY OF MILPITAS MCCANDLESS WELL FACILITY

PROCESS CONTROL TEST CERTIFICATION

#	Description	Pass	Fail	Comments
1				
2				
3				
4				
5				
6				
7				
8				
9				

END OF SUPPLEMENT A

SUPPLEMENT 01810-B
CITY OF MILPITAS MCCANDLESS WELL FACILITY

FUNCTIONAL TEST CERTIFICATION

#	Description	Pass	Fail	Comments
1				
2				
3				
4				
5				
6				
7				
8				
9				

END OF SUPPLEMENT B

SECTION 01820

TRAINING

PART 1 - GENERAL

1.01 SECTION INCLUDES

A. Requirements for training City's personnel, by persons retained by the Contractor specifically for the purpose, in the proper operation and maintenance of the equipment and systems installed under this Contract.

1.02 REFERENCED SECTIONS

A. The following Section is referenced in this Section

1. Section 01330 – Submittals
2. Section 01810 – Starting and Adjusting

1.03 SUBMITTALS

A. Comply with Section 01330.

B. Submit an overall training schedule with date, time, and subject of each training session.

C. Submit a training plan that includes the following items. The Contractor may prepare separate submittals for individual equipment items and systems.

1. Qualifications of individual(s) to be conducting the training.
2. Date, time, and subject of each training session.
3. Lesson plan for each training session.
4. Training materials for each training session, including training manuals, handouts, visual aids, and other reference materials.

1.04 GENERAL REQUIREMENTS

A. Where required by the detailed specifications, provide on-the-job training of City's personnel, which will include plant operations personnel, mechanics, electricians, and electronics technicians.

B. The Contractor shall coordinate with the equipment suppliers for all training activities and provide additional labor, services, and materials as required to complete training.

C. The training sessions shall be conducted by qualified, experienced (2 years minimum), manufacturer's factory-trained representatives (not sales representatives) of the various equipment manufacturers.

D. Field training sessions shall take place at the project site. Classroom training facility shall be provided at the site by the Contractor.

1.05 FORMAT AND CONTENT

A. The content of the training session shall be specific to the products installed.

B. Include instruction in both equipment operation and preventive maintenance.

C. Classes shall be structured such that classroom sessions are interspersed with field instruction in logical sequence. Each training session shall be comprised of time spent both in the classroom and at the specific location of the subject equipment or system.

D. The following services shall be provided for each item of equipment or system. Additional services shall be provided, where specifically required in individual specification sections.

1. At a minimum, classroom equipment training shall include:

   a. Using slides and drawings, discuss the equipment's specific location in the plant and an operational overview.

   b. Purpose and plant function of the equipment.

   c. A working knowledge of the operating theory of the equipment.

   d. Start-up, shutdown, normal operation, and emergency operating procedures, including a discussion on system integration and electrical interlocks, if any.

   e. Identify and discuss safety items and procedures.

   f. Routine preventative maintenance, including specific details on lubrication and maintenance of corrosion protection components.

   g. Routine and long-term calibration procedures.

   h. Operator detection, without test instruments, of specific equipment trouble symptoms.

   i. Required equipment exercise procedures and intervals.

   j. Routine disassembly and assembly of equipment if applicable (as judged by the City on a case-by-case basis) for purposes such as operator inspection of equipment.

   k. Normal and major repair procedures.

   l. Recommended maintenance documentation for warranty purposes.

2. At a minimum, hands-on equipment training shall include:

   a. Identify location of equipment and review the purpose.

   b. Identifying piping and flow options.

   c. Identifying valves and their purpose.

   d. Identifying instrumentation:

      1) Location of primary element.

      2) Location of instrument readout.

      3) Discuss purpose, basic operation, and information interpretation.

   e. Discuss, demonstrate, and perform standard operating procedures and round checks.

   f. Discuss and perform the preventative maintenance activities.

   g. Discuss and perform start-up and shutdown procedures.

   h. Perform the required equipment exercise procedures.

   i. Perform routine disassembly and assembly of equipment if applicable.

   j. Identify and review safety items and perform safety procedures, if feasible.

1.06 TIMING OF TRAINING SESSIONS

A. The Contractor shall coordinate the scheduling of training sessions with the operations superintendent.

B. No training sessions shall be scheduled for Mondays, Fridays, Saturdays, Sundays, or holidays.

C. Consolidate short training sessions into combined sessions so that staff time is more efficiently used. The minimum combined session length should be 1.5 to 2 hours. The maximum single or combined session length shall be 4 hours. The Contractor shall arrange to have the training conducted on consecutive days, with no more than 4 hours of classes scheduled for any one day.

D. Commencement of training sessions will be authorized only after successful completion of Starting and Adjusting activities. See Section 01810.

E. Conduct and complete training sessions before starting the Commissioning Test.

F. Operation and maintenance manuals shall be approved and ready for distribution to the City's personnel at least thirty (30) days prior to the date scheduled for the individual training session.

G. Training materials shall be reviewed and accepted by the Engineer at least three (3) weeks prior to the date scheduled for the individual training session.

PART 2 - PRODUCTS

2.01 LESSON PLANS

A. Prepare a formal written lesson plans for each training session. Lesson plans shall contain an outline of the subjects to be presented, time allocation for each subject, and a brief description of the material that will be covered for each subject.

B. Furnish ten copies of the lesson plan, training manuals, handouts, and reference materials and one copy of necessary visual aids at least 1 week prior to each training session. These materials shall remain the property of the City and shall be suitably bound for proper organization and easy reproduction.

2.02 VIDEO RECORDING

A. The City may record, or retain the services of a commercial video taping service to record, each training session. After taping, the material may be edited and supplemented with professionally produced graphics to provide a permanent record.

PART 3 - EXECUTION (NOT USED)

END OF SECTION

(THIS PAGE LEFT BLANK INTENTIONALLY)

SECTION 01825

EQUIPMENT AND SYSTEM TESTING

PART 1 - GENERAL

1.01 SECTION INCLUDES

A. Requirements for the Contractor's testing of mechanical, electrical, and instrumentation and control systems provided under this Contract.

B. The requirements contained in this Section supplement, but do not supersede, specific testing requirements found elsewhere in the Contract Documents.

1.02 DEFINITIONS

A. Commissioning Test: A confirmation that equipment, systems, and facilities satisfy the detailed requirements of the technical specifications. The duration of the Commissioning period shall be not less than seven (7) consecutive days.

B. Operational Test: Operation of the system under typical plant operating conditions to confirm that the system operates in accordance with the design intent. The duration of the Operational Testing period shall be not less than thirty (30) consecutive days.

C. Significant Interruption: Significant interruption may include any of the following events:

1. Failure of Contractor to maintain qualified on-site start-up personnel as specified.

2. Failure of critical equipment unit, system, or sub-system furnished under this Contract that is not satisfactorily corrected within two (2) hours after the failure.

3. Failure of non-critical equipment unit, system, or sub-system furnished under this Contract that is not satisfactorily corrected within twenty-four (24) hours after the failure.

4. Unplanned halting of operations for any reason related to the facilities constructed or the equipment furnished under this Contract.

1.03 REFERENCED SECTIONS

A. The following Section is referenced in this Section

1. Section 01330 – Submittals

2. Section 01560 – Environmental Controls

1.04 SUBMITTALS

A. Prepare and submit in accordance with Section 01330.

B. Independent Testing Labs: When testing by an independent laboratory is specified, provide credentials and certifications to demonstrate capabilities.

C. Testing Plan and Schedule

1. Submit a testing schedule and updates as appropriate. Submit at least 20 working days prior to the scheduled start of testing. Confirm the test schedule, or provide an updated schedule at least four (4) days prior to the start of testing.

2. Describe step by step procedure that will be utilized to systematically test equipment and systems.

D. Submit the following test results:

1. Results of the Commissioning Test.

2. Results of the Operational Tests.

1.05 COORDINATION

A. Coordinate the activities of subcontractors and equipment suppliers to implement the requirements of this Section. Minimum levels of on-site testing assistance required of the equipment suppliers is described in separate Sections.

1.06 DOCUMENTATION REQUIREMENTS

A. Develop and implement a record keeping system to document compliance with the requirements of this Section.

B. Document date of test, nature of test (performance or operational), test objectives, test results, and test instruments used during the test. Provide signature spaces for the Engineer and the Contractor.

1.07 TEST PLANS

A. Identify participants in the tests, including subcontractors and manufacturer's representative. List the names of the participants, contact information, roles and responsibilities, and dates the participant will be present during the test periods.

B. Identify testing conditions and durations for the conditions. Undertake performance tests under extreme design conditions, as well as normal operating conditions that will be encountered.

C. Identify materials needed and quantities of materials needed for tests, including materials to be supplied by the City.

D. Identify data that will be recorded during the tests, the method of data collection, test instruments used for data collection, and the frequency the data will be collected. Prepare report forms for data collection.

E. Identify plan for storing, reusing, and disposing of water produced during the testing period.

1.08 TESTING SCHEDULE

A. Prepare a testing schedule setting forth the sequence contemplated for performing the test work. Identify the contemplated start date, duration of the test, and completion of each test.

1.09 TEST RESULTS

A. Test results shall be within the tolerances set forth in the detailed specification sections of the Contract Documents. If no tolerances have been specified, test results shall conform to tolerances established by recognized industry practice.

B. Retesting: If any portion of the work should fail to fulfill the Contract requirements and is adjusted, altered, renewed, or replaced, tests on that portion, together with all other

portions of the work as are affected thereby, shall be repeated within reasonable time and in accordance with the specified conditions.

PART 2 - (NOT USED)

PART 3 - EXECUTION

3.01 GENERAL

A. The objective of the testing program is to demonstrate, to the Engineer's complete satisfaction, that the systems and equipment provided under this Contract meet the specified performance requirements.

B. Testing program also provides a base-line operating condition for the City to use in a preventative maintenance program.

C. The testing sequence shall consist of Commission Testing followed by Operational Testing.

D. Provide labor, outside services, materials, test equipment, and other items required to complete the specified testing. Furnish fuel, oil, grease, and other materials needed to conduct the specified tests.

E. Remove all temporary installations used for Starting and Adjusting activities before beginning the Commissioning and Operational Tests.

F. Correct defects in material and workmanship immediately following their discovery.

G. The Commissioning Test shall be completed prior to Substantial Completion.

H. Provide for maintenance of materials, equipment, and systems furnished under this Contract until Substantial Completion. This includes required maintenance activities during the Commissioning Test period.

I. As of the date of Substantial Completion, the City's staff will be responsible for operation and maintenance of new facilities. This excludes any issues identified as warranty matters.

J. Dispose of water produced during the test in accordance with the requirements in Section 01560.

3.02 COMMISSIONING TEST

A. The Commissioning Test shall commence only after completion of the following:

1. Successful completion of all individual system testing.
2. Successful completion of Starting and Adjusting activities.
3. Disinfection of systems.
4. Correction of punch list deficiencies.
5. Submittal of O&M Manuals.
6. Completion of required Training.

B. The purpose of the Commissioning Test is to:

1. Conduct performance testing to verify that the system complies with the performance requirements contained in the individual equipment specifications.

2. Expose flaws or defects in workmanship, equipment, or materials, not previously discovered that are the responsibility of the Contractor to repair, correct, modify, or replace prior to Substantial Completion.

C. Conduct Commissioning Test for a period of seven (7) days without significant interruptions.

D. Should the Commissioning Test be halted due to a significant interruption event, the test shall be repeated until the specified continuous period has been accomplished without interruption.

E. The Contractor shall be responsible for coordinating all Commissioning Test activities. The Contractor shall operate the equipment and systems furnished under this Contract. City staff will operate existing equipment and systems as needed for the Commissioning Test.

3.03 OPERATIONAL TEST

A. The Operational Test may begin after successful completion and acceptance of the Commissioning Test.

B. The purpose of this Operational Test is to:

1. Provide the environment by which the City's O&M staff can place equipment and systems into service.

2. Expose flaws or defects in workmanship, equipment, or materials, not previously discovered that are the responsibility of the Contractor to repair, correct, modify, or replace prior to Final Acceptance.

C. Conduct the Operational Test for a period of thirty (30) days without significant interruptions.

D. All equipment furnished under this Contract must operate properly for the test period. If any item malfunctions during the test, the item shall be repaired, and the test restarted at day zero with no credit given for the operating time before the malfunction.

E. The Contractor shall operate the equipment and systems furnished under this Contract for five (5) consecutive days beginning with the first day of the Operational Test Period. For the remainder of the Operational Test Period, City's staff will operate the facility, and the Contractor shall provide personnel on a 24-hour per day, "on-call" basis, to adjust, repair, and correct deficiencies as required to keep the facilities in operation.

END OF SECTION

SECTION 01890

RESTORATION OF IMPROVEMENTS

PART 1 - GENERAL

1.01 SECTION INCLUDES

A. Restoration of work areas after installation and construction of new facilities.

1.02 REFERENCED SECTIONS

A. The following Sections are referenced in this Section

1. Section 02740 – Asphalt Paving

PART 2 - PRODUCTS (NOT USED)

PART 3 - EXECUTION

3.01 STRUCTURES

A. Take precautions to protect the integrity and usefulness of existing facilities.

B. If necessary, remove existing structures including curbs, gutters, pipelines, and utility poles, as necessary for the performance of the work.

1. Repair existing structures that are damaged as a result of the Work under this contract

2. Rebuild or replace the structures in as good a condition as originally found.

3.02 ROADS AND STREETS

A. Asphalt pavement that has been removed, broken, or damaged, or in which the ground has caved or settled during the work under this contract, shall be brought to original grade and section and resurfaced.

B. Before resurfacing material is placed, sawcut edges of pavement to provide clean solid vertical faces.

C. Complete pavement repair in accordance with Section 02740 and in accordance with the requirements of the affected agencies and parties.

3.03 CULTIVATED AREAS AND OTHER SURFACE IMPROVEMENTS

A. Restore cultivated or planted areas and other surface improvements damaged by construction as nearly as possible to their original condition.

B. Repair existing guard posts, barricades, and fences that are damaged.

C. Replace damaged plantings with new plantings of the same type or as acceptable to the City.

END OF SECTION

(THIS PAGE LEFT BLANK INTENTIONALLY)

SECTION 01999

REFERENCE FORMS

The forms listed below and included in this section are referenced from other sections of the project manual. Contractor may submit equivalent forms for City's approval prior to use. If the City does not approve substitute form, Contractor must use forms found in this Section. City will provide Contractor electronic files of prescribed forms upon request.

Referenced Section	Title of Form
01782	Equipment Record Form - A
01782	Equipment Record Form - B
01782	Equipment Test Report
09960, 11060	Extended Warranty Form
01810	Instrumentation Data and Calibration Record Test Form
01782, 01810, 11000, 11342,11364, 11475, 13216, 15736, 15805	Manufacturer's Installation Certification Form
01782	Manufacturer's Instruction Certification Form
01782	Manufacturer's Representative Service Report
11060, 11342	Motor Data Form
01782	Operating and Maintenance Information Transmittal
15951, 15996	Pipe Test Record Form
11342	Training Certification Form
09960, 11342	Unit Responsibility Certificate

(THIS PAGE LEFT BLANK INTENTIONALLY)

EQUIPMENT RECORD FORM A (Electrical or Motorized Mechanical Equipment):

Equip. Description:		Equip. Loc.:	
Equip. No.	Shop Dwg. No.	Date Inst.:	Cost:
Mfgr.:		Mfgr Contact	
Mfgr. Address:			Phone:
Vendor :		Vendor Contact:	
Vendor Address:			Phone:

MAINTENANCE REQUIREMENTS	D	W	M	Q	S	A	Hours

Lubricants: Recommended	
Alternative:	
Misc. Notes:	

Recommended Spare Parts				Electrical Nameplate Data			
Part No.	Qty	Part Name	Cost	Equip			
				Make			
				Serial No.		Id. No.	
				Model No.		Frame No.	
				HP	V	Amp	Hz
				pH	RPM	SF	Duty
				Code	Ins. Cl.	DES	Type
				NEMA DES	C Amb.	Temp Rise	Rating
				Misc.			

Recommended Spare Parts				Mechanical Nameplate Data			
Part No.	Qty	Part Name	Cost	Equip			
				Make			
				Serial No.		Id. No.	
				Model No.		Frame No.	
				HP	V	Amp	Hz
				pH	RPM	SF	Duty
				Code	Ins. Cl.	DES	Type
				NEMA DES	C Amb.	Temp Rise	Rating
				Misc.			

EQUIPMENT RECORD FORM B (Electrical or Non-Motorized Mechanical Equipment):

Equip. Description:		Equip. Loc.:	
Equip. No.	Shop Dwg. No.	Date Inst.:	Cost:
Mfgr.:		Mfgr Contact	
Mfgr. Address:			Phone:
Vendor :		Vendor Contact:	
Vendor Address:			Phone:

MAINTENANCE REQUIREMENTS	D	W	M	Q	S	A	Hours

(THIS PAGE LEFT BLANK INTENTIONALLY)

EQUIPMENT TEST REPORT

NOTE:

This example equipment test report is provided for the benefit of the Supplier and is not specific to any piece of equipment to be installed as a part of this project. The example is furnished as a means of illustrating the level of detail required for the preparation of equipment test report forms for this project.

Project: _____

City _____

Contractor: _____

Supplier: _____

Equipment Name: _____

Equipment Number: _____

Specification Ref: _____

PRE-OPERATIONAL CHECKLIST

	Supplier		Engineer	
	Verified	Date	Verified	Date
Mechanical				
Lubrication				
Alignment				
Anchor bolts				
Pump/mechanical equipment vibration testing				
Seal water system operational				
Equipment rotates freely				
Safety guards				
Valves operational				
O&M manual information complete				
Supplier's installation certificate complete				
Electrical (Circuit ring-out and high-pot tests)				
Circuits:				
Power to MCC				
Control to HOA				

	Supplier		Engineer	
	Verified	Date	Verified	Date
Indicators at MCC:				
Red (running)				
Green (power)				
Amber (auto)				
Indicators at local control panel				
Wiring labels complete				
Nameplates:				
MCC				
Control station				
Control panel				
Electrical equipment grounding verification				
Equipment bumped for rotation				
Piping Systems				
Cleaned and flushed				
Suction				
Discharge				
Pressure tests				
Temporary piping screens in place				
Thrust restraint and pipe supports in place				
Instrumentation and Controls				
Flow meter _____calibration Calibration Report No.				
Flow recorder_____calibrated against transmitter				
VFD speed indicator calibrated against independent reference				
Discharge overpressure shutdown switch calibration				
Simulate discharge overpressure shutdown				
I/C equipment grounding verification				

FUNCTIONAL TESTS

	Supplier		Engineer	
	Verified	Date	Verified	Date
Mechanical				
Motor operation temperature satisfactory				
Pump operating temperature satisfactory				
Unusual noise, *etc?*				
Pump operation: gpm/ psig				
Pump Measurement:				
Flow/Pressure				
Test gage number				
Alignment hot				
Doweled in				
Pump/mechanical equipment vibration testing				
Remarks:				
Electrical				
Local switch function:				
Runs in *HAND*				
No control power in *OFF*				
Timer control in *AUTO*				
Overpressure protection switch PS2502C functional in both *HAND* and *AUTO*				
Overpressure protection switch PS2502C set at 75 psig				
PLC 2500 set at 24 hr cycle, 25 min *ON*				
Motor amperage draw test				

OPERATIONAL TEST

	Supplier		Engineer	
	Verified	Date	Verified	Date
48-hour continuous test:				
pump cycles as specified				
indicators functional				
controls functional				
pump maintains capacity				
overpressure protection remains functional				
hour meter functional				

RECOMMENDED FOR BENEFICIAL OCCUPANCY

Engineer Date

ACCEPTED FOR BENEFICIAL OCCUPANCY

City's Representative Date

EXTENDED WARRANTY FORM

(For Equipment, Material, Process)

Extended Warranty For: Product Name

Specification Section No. _____

Product Manufacturer _____

Project: _____

Location: _____

We hereby guarantee the Product Name that we have constructed for a period of # of Years (#) year(s), as specified in the Section noted above, from Date, the date of acceptance of the work/substantial completion and the assumption of occupancy and beneficial use by the Name of City.

The following are excluded from the provisions of this warranty:

We agree that if any of the equipment, material, or process designated for Product Name should fail due to any reason other than improper maintenance or improper operation, or should any portion of the work fail to fulfill any of the requirements of the Specifications, we will, within ten days after written notice of such defects, commence to repair or replace the same together with any other work which may be damaged or displaced in so doing.

In the event of our failure to comply with the above mentioned conditions within a reasonable time after being notified, or should exigent circumstances require repairs or replacements to be made before we can be notified or respond to notification, we do hereby authorize the Name of City to proceed to have the defect repaired and made good at our expense, and we will pay the cost therefor upon demand.

The warranty provided herein shall not be in lieu of, but shall be in addition to any warranties or other obligations otherwise imposed by the Contract Documents and by law.

Manufacturer:	_____	Contractor:	_____
Signed:	_____	Signed:	_____
Title:	_____	Title:	_____
Date:	_____	Date:	_____
Phone:	_____	Phone:	_____
E-mail:	_____	E-mail:	_____

INSTRUMENTATION DATA AND CALIBRATION RECORD TEST FORM

Component Description _____

Component Tag Name _____

Manufacturer		Location	
Name	_____	Site	_____
Model	_____		_____
Serial #	_____	Equip	_____

	Range	Unit
Indicator Range		
Input Range		
Output Range		

General Notes
1) Attach Calibration Curves for dp Flowmeters
2) Include mounting elevations for level Instruments
3) All entries within solid box to be typed in prior to start of test

Designed Calibration			Measured Calibration		
Input Signal	Output	Eng. Value	Input	Output	Comments

Notes:

Tested by _____ Witnessed by _____
(print name) (print name)

Signature _____ Signature _____

Date _____ Date _____

MANUFACTURER'S INSTALLATION CERTIFICATION FORM

Contract No: _____ Specification Section: _____

Equipment Name _____

Contractor: _____

Manufacturer of Equipment Item: _____

The undersigned manufacturer of the equipment item described above hereby certifies that he has checked the installation of the equipment and that the equipment, as specified in the project manual, has been provided in accordance with the manufacturer's recommendations and that the trial operation of the equipment item has been satisfactory.

Comments:

_____

_____

_____

_____

_____ _____

Date Manufacturer

_____

Signature of
Authorized Representative

_____ _____

Date Contractor

_____

Signature of
Authorized Representative

MANUFACTURER'S INSTRUCTION CERTIFICATION FORM

Contract No: _____ Specification Section: _____

Equipment Name: _____

Contractor: _____

Manufacturer of Equipment Item: _____

The undersigned manufacturer certifies that a service engineer has instructed the City's staff in the proper maintenance and operation of the equipment designated herein.

Operations Check List (check appropriate spaces)

Start-up procedure reviewed	☐
Shutdown procedure reviewed	☐
Normal operation procedure reviewed	☐
Others:	
_____	☐
_____	☐

Maintenance Check List (check appropriate spaces)

Described normal oil changes (frequency)	☐
Described special tools required	☐
Described normal items to be reviewed for wear	☐
Described preventive maintenance instructions	☐
Described greasing frequency	☐
Others	
_____	☐
_____	☐

Manufacturer: _____

Date	Signature of Authorized Representative
Date	Signature of City's Representative
Date	Signature of Contractor's Representative

MANUFACTURER'S REPRESENTATIVE SERVICE REPORT

City: _____ File No. _____

Project: _____ Date: _____

Project No. _____

- This form should be completed and returned by the manufacturer's representative prior to leaving the site.

Manufacturer: _____ MRSR No. _____

Supplier: _____ Contract/P.O. No. _____

Manufacturer's Representative _____
Company

Equipment/Material: _____

Work performed and tests made on equipment:

Factory errors corrected:

Field errors corrected:

The above equipment ___is ___is not ready to be placed in operation.
Remarks:

Arrival onsite _____ _____ __AM __PM Department from Site _____ _____AM __PM
Date Time Date Time

Actual total duration onsite was _____hours for period covered by this report.

Manufacturer's Representative _____ _____
Signature Date

Address: _____
Phone No.

Report Received By: _____
Signature Date

Distribution: _____ _____ _____

MOTOR DATA FORM

Equipment Name: _____ Equipment Number: _____

Site Location: _____

Nameplate Markings

Mfr _____ Mfr Model _____ Frame _____ HP _____

Volts _____ Phase _____ RPM _____ Service Factor _____

FLA _____ LRA _____ Freq _____ Amb temp rating _____ degrees C

Time rating _____ Design letter _____

(NEMA MG1-10.35) (NEMA MG-1.16)

KVA code letter _____ Insulation class _____

The following information is required for explosionproof motors only:

A. Approved by UL for installation in Class _____ , Div _____

B. UL frame temperature code _____ , Group _____ Atmosphere

(NEC Tables 500-2 and 500-2(b))

The following information is required for high efficiency motors only:

A. Guaranteed minimum efficiency at full load or NEMA efficiency index

(NEMA MG1-12.53b)

B. Nameplate or nominal efficiency _____

Data Not Necessarily Marked on Nameplate

Type of enclosure _____ Enclosure material _____

Temp rise _____ degrees C (NEMA MG1-12.41,42)

Space heater included? _____ Yes _____ No, if Yes _____ watts _____ volts

Type of motor winding overtemperature protection, if specified:

_____

Use the space below to provide additional information on other motor modifications, if specified:

_____

_____

_____

_____

OPERATING AND MAINTENANCE INFORMATION TRANSMITTAL

Submittal Description: _____

Submittal No.	**# Copies:**
☐ 1st Submission	☐ Re-Submittal
Spec Section	

City:	**Routing**	**Date Sent**	**Date Received**
	Contractor/CM		
Project:	CM/Design Consultant		
	Design Consultant/CM		
Contractor:	CM/Contractor		

Supplier Name:	Supplier Review		Design Consultant Review	
Checklist	Satisfactory	N/A	Accept	Deficient
1. Table of Contents	☐	☐	☐	☐
2. Equipment Record Forms	☐	☐	☐	☐
3. Supplier/Vendor Contact Information	☐	☐	☐	☐
4. Safety Precautions	☐	☐	☐	☐
5. Operator Pre-Start	☐	☐	☐	☐
6. Start-up, Shutdown/Post-Shutdown Procedures	☐	☐	☐	☐
7. Normal Operations	☐	☐	☐	☐
8. Emergency Operations	☐	☐	☐	☐
9. Operator Service Requirements	☐	☐	☐	☐
10. Environmental Conditions	☐	☐	☐	☐
11. Lubrication Data	☐	☐	☐	☐
12. Preventative Maintenance Plan/Schedule	☐	☐	☐	☐
13. Troubleshooting Guide/Diagnostic Techniques	☐	☐	☐	☐
14. Wiring Diagrams and Control Diagrams	☐	☐	☐	☐
15. Maintenance and Repair Procedures	☐	☐	☐	☐
16. Removal and Replacement Procedures	☐	☐	☐	☐
17. Spare Parts and Supply List	☐	☐	☐	☐
18. Corrective Maintenance Man-hours	☐	☐	☐	☐
19. Parts Identification	☐	☐	☐	☐
20. Warranty Information	☐	☐	☐	☐
21. Personnel Training Requirements	☐	☐	☐	☐
22. Testing Equipment and Special Tool Information	☐	☐	☐	☐

Remarks:	

_____ (Contractor's Signature)

_____ (Supplier's Signature)

PIPE TEST RECORD

Date: _____

Project Name: _____ **Project No.:** _____

Contractor: _____

Pipeline Size & Name	Pipe Type	Pipe Location/Description
(SL), SN, IA, etc.)	(DI, PVC, Steel, Copper, etc.)	(Attach sketch if needed)
Section Tested: From: _____ To: _____	**First Test** ☐ **Or** **Re-Test** ☐	**Length of Pipe Tested:** _____ **Ft.**

Test Specifications	Actual Test Results
Type of Test: _____	Start pressure: _____
Type of Test: _____	End Pressure: _____
	Start time _____ Stop time _____ Duration _____
Duration: _____	
Allowable loss: _____	Actual loss: _____

Comments:

_____

_____

_____

_____

Test Passes	☐
Test Fails	☐

Tested By: _____
Contractor

Test Witnessed By: _____
Construction Inspector

TRAINING CERTIFICATION FORM

Contract No: _____ Specification Section: _____

Equipment Name: _____

Contractor: _____

Manufacturer of Equipment Item: _____

The undersigned manufacturer certifies that a qualified factory-trained representative with a minimum of two years experience has instructed the City's staff in the proper maintenance and operation of the equipment designated herein. The undersigned manufacturer (or equipment supplier) also agrees to conduct an eight (8) hour follow-up training session(s) after the equipment has been installed and continually operated by the City for at least three (3) months but prior to expiration of the one year warranty period.

Operations Check List (check appropriate spaces)

Start-up procedure reviewed	☐
Shutdown procedure reviewed	☐
Normal operation procedure reviewed	☐
Others:	
_____	☐
_____	☐

Maintenance Check List (check appropriate spaces)

Described normal oil changes (frequency)	☐
Described special tools required	☐
Described normal items to be reviewed for wear	☐
Described preventive maintenance instructions	☐
Described greasing frequency	☐
Others	
_____	☐
_____	☐

_____
Manufacturer

_____	_____
Date	Signature of Authorized Representative
_____	_____
Date	Signature of City's Representative
_____	_____
Date	Signature of Contractor's Representative

Name of City

CERTIFICATE OF UNIT RESPONSIBILITY
For Specification Section

Section Number and Title

In accordance with the contract documents, the undersigned manufacturer accepts unit responsibility for all components of equipment furnished under specification Section Section #***. We hereby certify that these components are compatible and comprise a functional unit suitable for the specified performance and design requirements***.

Name of Corporation

Street Address

City, State and Zip Code

By: _____
Duly Authorized Official

Notary Public

Commission Expiration Date

Name

Title

Seal:

Date: _____

SECTION 02071
GEOTEXTILE FABRIC

PART 1 - GENERAL

1.01 SECTION INCLUDES

A. Geotextile fabric.

1.02 REFERENCED SECTIONS

A. The following Sections are referenced in this Section

1. Section 01330 – Submittals
2. Section 02300 – Earthwork

1.03 SUBMITTALS

A. Comply with Section 01330.

B. Manufacturer's Data:

1. Manufacturer's name and product information
2. Certificate of Compliance
3. Minimum Average Roll Values (MARV)

1.04 DEFINITIONS

A. Geosynthetic – A planar product manufactured from polymeric material used with soil, aggregate, or other geotechnical engineering materials as an integral part of a civil engineering project.

B. Geotextile – a permeable geosynthetic comprised solely of textile materials (nonwoven or woven comprised of various synthetic polymers and manufactured by numerous processes).

1.05 FUNCTION

A. Subgrade Enhancement Geotextile:

1. Located beneath aggregate base of both paved and unpaved roadways. Used as solids separation barrier for below grade structures.

1.06 QUALITY ASSURANCE

A. Treat geotextiles to resist degradation from exposure to sunlight.

1.07 DELIVERY, STORAGE AND HANDLING

A. Deliver, unload, and store geotextile fabric in manufacturer's wrapping with a minimum amount of handling.

B. Protect geotextile rolls from excessive dust, moisture, rainfall, mud, ultraviolet exposure, and debris.

C. Follow manufacturer's recommendations regarding storage.

PART 2 - PRODUCTS

2.01 MANUFACTURERS

A. One of the following or equal:

1. TenCate Mirafi

2. US Fabrics

2.02 MATERIALS

A. General

1. Fabric values are based on the State of California Department of Transportation Specifications (Section 96) except for Geomembrane Support Fabric.

B. Subgrade Enhancement Fabric

1. Polyester or polypropylene.

2. When tested under the referenced ASTMs, the properties must have the values shown in the following table.

Subgrade Enhancement Geotextile (Caltrans 96-1.02O)						
Quality Characteristic	Test Method	Requirement[(a)]				
		Class A1	Class A2	Class B1	Class B2	Class B3
Elongation at break, (percent)	ASTM D4632	<50	≥50	<50	<50	≥50
Grab Breaking Load, 1-inch grip in each direction, (min, lb)	ASTM D4632	250	160	--	320	200
Wide width tensile strength at 5 percent strain, (min, lb/ft)	ASTM D4595	--	--	2,000	--	--
Wide width tensile strength at ultimate strength, (min, lb/ft)	ASTM D4595	--	--	4,800	--	--
Tear strength, (min, lb)	ASTM D4533	90	60	--	120	80
Puncture strength, (min, lb)	ASTM D6241	500	310	620	620	430
Permittivity, (min, sec-1)	ASTM D4491	0.05	0.05	0.20	0.20	0.20
Apparent opening size, (min, inches)	ASTM D4751	0.012	0.012	0.024	0.012	0.012
UV Resistance, retained grab breaking load, 500 hours, (min, percent)	ASTM D4355	70	70	70	70	70
[(a)] Values are based on minimum average roll value in the weaker principal direction except apparent opening size is based on maximum average roll value.						

PART 3 - EXECUTION

3.01 PREPARATION

A. Subgrade and earthwork as specified in Section 02300.

3.02 INSTALLATION

A. Roll Length: Sized to fit area of use. Minimum length of 300 feet for areas larger than 300 feet long.

B. Handle geotextile fabric in a manner that will not damage fabric.

C. Place geotextile with no wrinkles or folds.

D. If the fabric is joined with overlap joints, the adjacent borders of the fabric must be overlapped be at least 24-inches. Overlap in the same directions that the cover material is placed.

E. Install as shown on the Drawings and per manufacturer's installation instructions.

END OF SECTION

(THIS PAGE LEFT BLANK INTENTIONALLY)

SECTION 02085
PRECAST CONCRETE UTILITY STRUCTURES

PART 1 - GENERAL

1.01 SECTION INCLUDES

A. Precast concrete manholes and catch basins (storm inlets).

B. Manhole and catch basin vault frames and covers.

C. Manhole accessories.

1.02 REFERENCED SECTIONS

A. The following Sections are referenced in this Section

1. Section 01330 – Submittals
2. Section 01611 – Seismic
3. Section 15951 – Testing Gravity Flow Pipelines

1.03 SUBMITTALS

A. Prepare and submit in accordance with Section 01330.

B. Product Data:

1. Manhole barrels, bases, cones, grade rings, tops, frames, and covers.
2. Rubber boot-type pipe connectors for connecting piping to manholes.
3. Catch basin sections, basins, tops, frames, and grates.

C. Utility Structure Details:

1. Manufacturer's standard shop drawings for each size and type of precast utility structure.
    a. Provide dimensions of structure.
    b. Identify location of each type of insert cast into the structure.
2. Illustrate construction details related to joints between precast sections, method of connecting pipe to the structure, size and location of pipe penetrations, reinforcement details and concrete mix design.

D. Structural Design:

1. Laboratory results verifying compressive strength of concrete mix design used in the manufacture of precast concrete utility structures.
2. Calculations and related sketches prepared, stamped and signed by a civil or structural Professional Engineer licensed to practice in the state of California.

1.04 DESIGN REQUIREMENTS

A. Manholes:

1. Concrete Mix Design: See City Standard Detail and Specifications.

2. Risers, Conical Tapered Sections, Grade Rings and Flat Top Sections: See City Standard Detail and Specifications.

B. Catch Basins:

1. Concrete Mix Design:

a. Minimum Compressive Strength: 4,000 psi at 28 days.

b. Cement: Type II low alkali Portland cement meeting requirements of ASTM C150.

c. Fly Ash: Class C or Class F meeting requirements of ASTM C618, not to exceed 25 percent by weight.

d. Aggregates: Conform to requirements of ASTM C33.

2. Conform to ASTM C858.

3. Base design and manufacture to A-16 (HS 20-44) loading in accordance with ASTM C857.

1.05 COORDINATION

A. Coordinate layout and installation of utility structures with the final arrangement of other utilities, site grading, and surface features as determined in the field.

PART 2 - PRODUCTS

2.01 PRECAST CONCRETE MANHOLES

A. Precast reinforced concrete manholes shall be constructed in accordance with design, size, shape, form and details indicated on the City Standard Detail and Specifications.

B. Accessories:

1. Rubber Boot Pipe Connectors:

a. Manufacturers: One of the following or equal:

1) "Kor-N-Seal" flexible rubber boot with stainless steel accessories as manufactured by NPC, Inc.

2) "Z-LOK XP" or "A-LOK" flexible connector as manufactured by A-LOK Products, Inc.

2. Joint Sealing Compound: See City Standard Specifications.

3. Manhole Frame and Cover Sets: See City Standard Detail and Specifications.

2.02 PRECAST CONCRETE CATCH BASINS

A. Provide precast concrete catch basins, drop inlets, curb inlets or other storm drain inlets as indicated on the Drawings.

B. Manufacturers: One of the following or equal:

1. Oldcastle Precast

2. Christy Concrete Products.

3. Utility Concrete Products.

C. Description:

1. Factory-fabricated, reinforced concrete box with frame and grate.

2. Open or integral closed bottom as indicated on the Drawings or as scheduled.

3. Monolithically poured walls and bottom, unless open-bottom vaults are indicated on the Drawings or scheduled.

D. Materials

1. Concrete: 5,000 psi at 28 days

2. Reinforcing steel: ASTM A615 grade 60

3. Mesh: Welded wire fabric ASTM A185 grade 65

E. Frame and Grate

1. As indicated on the City Standard Detail.

PART 3 - EXECUTION

3.01 MANUFACTURE

A. Utilize a central batching facility to ensure accurate weighing and mixing of materials to consistently obtain a suitable concrete mix.

B. Concrete Batching: Properly proportion sand, aggregate and cement with sufficient water to produce a concrete mix of uniform quality and slump.

C. Concrete Compaction: Use either external or internal mechanical vibration during placement of the concrete mix within the forms.

D. Curing: Steam cure concrete while still in the forms and after an initial set has taken place.

1. Steam temperature: Not to exceed 160 degrees F, nor raised from normal ambient temperature at a rate exceeding 40 degrees F per hour.

2. Terminate steam curing after sufficient time has elapsed to produce adequate strength to withstand any structural strain that may occur during the form stripping operation.

3. Additional curing may be applied by means of water spraying or membrane curing compound to reach the ultimate strength requirements.

E. Reinforcing Steel: Position within the forms as required for design loads. Tie reinforcing steel sufficiently to withstand displacement during the pouring operation.

3.02 INSTALLATION

A. Concrete Manholes:

1. Manhole Invert: Construct with smooth transitions to provide an unobstructed flow path through the manhole. Remove sharp edges and rough sections.

a. When a full section of pipe is laid through the manhole, break out the top portion of the pipe. Cover the exposed edge of pipe with mortar and trowel smooth.

2. Manhole Sections:

a. Set each manhole section plumb.

b. Use sections of various heights and adjustment rings in order to bring top of manhole ring and cover to required elevation.

3. Joints in Manhole Sections:

a. Seal joints with joint sealing compound.

b. Clean joints with brush, prime and apply sealing compound in accordance with manufacture's printed instructions.

c. Seal joints watertight.

B. Manhole Frame and Cover Sets:

1. Location and Grade:

a. In Paved Areas: Set cover flush with pavement ± 0.25 inch

b. In Open Areas: Set cover above surrounding grade in accordance with the details indicated on the Drawings ± 1 inch

c. In existing roadside ditches or unpaved, untraveled right-of-way: Set cover approximately 12 inches above existing ground surface ±2 inches

2. Setting Frames:

a. Clean bearing surfaces and provide uniform contact.

b. Set manhole frames at required grade and securely attach to top of precast manhole shaft unit or on adjustment rings, using cement mortar.

3. Setting Covers: After frames are securely set in place, install covers and perform necessary cleaning and scraping of foreign materials from frames and covers as necessary to assure proper fit. Replace frames and covers that create noise when passed over by traffic.

C. Catch Basins:

1. Install catch basins level and plumb and with orientation and depth coordinated with connecting pipes.

2. Support catch basin on a level bed of aggregate base material, 6 inches deep and compacted to 95 percent of maximum density.

3. Seal joints with joint sealing compound. Clean joints and apply sealing compound in accordance with the manufacturer's requirements.

4. Finish Elevations of Catch Basins: As indicated on Drawings.

5. Covers: Install covers and perform necessary cleaning and scraping of foreign materials from frames and covers as necessary to assure proper fit. Replace frames and covers that create noise when passed over by traffic.

3.03 PIPE CONNECTIONS

A. Install connecting pipe at the required alignment and grade.

B. Set connecting pipes through the full thickness of the manhole wall, flush with the inner face of the wall.

C. Use standard flexible pipe connector boots, specifically manufactured for the intended service, to connect pipe to the manhole. When concrete pipe is used, grout pipe to the manhole so that the connection is watertight.

D. Plugging pipes provided for future connections:

1. Pipe 18-inches or less in diameter; Plug with concrete, extend minimum 8 inches into pipe.

2. Pipe greater than 18-inches in diameter: Construct plug using brick, concrete block or concrete, mortar exposed face of plugs constructed of brick and concrete block.

3.04 CLEANING

A. Upon completion, clean each structure of all silt, debris, and foreign matter.

3.05 TESTING

A. Test manholes for leakage in accordance with Section 15951.

END OF SECTION

(THIS PAGE LEFT BLANK INTENTIONALLY)

SECTION 02300

EARTHWORK

PART 1 - GENERAL

1.01 SECTION INCLUDES

A. Earthwork requirements for sitework, structures, roads and general earthwork, including excavation, fill, backfill, grading, and compaction; import of material; and disposal of surplus and unsuitable materials.

1.02 REFERENCED SECTIONS

A. The following Sections are referenced in this Section

1. Section 01330 – Submittals

2. Section 01560 – Environmental Controls

1.03 DEFINITIONS

A. Backfill: Earthwork necessary to add fill between new structures and the excavation up to the sub or finish grade.

B. Bedding Zone: The area from the trench subgrade to the bottom of the pipe.

C. Borrow Area: Area identified from which to obtain earthwork materials.

D. Cut: Earthwork necessary to remove existing material to lower the existing grade in elevation to sub or finish grade.

E. Embankment: Materials placed to form the subgrade for roadways or site improvements.

F. Embedment or Pipe Zone: The area from the top of the Bedding Zone to the bottom of the Trench Zone as indicated on the Drawings.

G. Excavation: Earthwork necessary to remove existing material for the installation of structures.

H. Fill: Earthwork necessary to add material to bring the existing grade up in elevation to sub or finish grade.

I. Finish Grade: Final surface following placement of surfacing, if any, as indicated.

J. Pavement Section: The upper portion of the trench within paved areas comprising the base and finished surface materials.

K. Spoils: Unsuitable or excess excavated materials.

L. Subgrade: The surface of the earthwork on which pavement, surfacing, base, subbase, or a layer of any other material is placed.

M. Trench Backfill: Materials used to backfill the trench including bedding zone, pipe zone, and trench zone backfill.

N. Trench Zone: The area from the top of the Pipe Zone to the bottom of the pavement base (subgrade), ground surface or other surface material over the trench excavation.

1.04 SUBMITTALS

A. Prepare submittals and submit in accordance with Section 01330.

B. Material Data: Submit the following for each material type imported to the site. All material submittals must be dated to less than 1 year prior to Notice-to-Proceed.

1. Material source.

2. Gradation.

3. Moisture-density curves.

4. Permeability tests (for clay material).

C. For imported materials, provide certification and source.

D. For excavations 5 feet or deeper: Submit detailed plan of all shoring, bracing, side sloping, or other provisions for worker protection against the hazard of caving ground during excavations.

E. Submit name and qualifications of materials testing lab for Contractor furnished testing.

1.05 QUALITY ASSURANCE

A. Material Testing Standards:

1. Particle size analysis of soils and aggregates: ASTM D422 – Standard Test Method for Particle-Size Analysis of Soils.

2. Determination of sand equivalent value: ASTM D2419 – Standard Test Method for Sand Equivalent Value of Soils and Fine Aggregate.

3. Liquid limit, plastic limit, and plasticity index: ASTM D4318 – Standard Test Method for Liquid Limit, Plastic Limit, and Plasticity Index of Soils.

4. The testing for organic matter: ASTM D2974 – Standard Test methods for Moisture, Ash, and Organic Matter of Peat and Other Organic Soils.

5. Testing for percentage of fractured particles: ASTM D5821.

6. References in this section to soil classification types and standards: Meanings and definitions indicated in ASTM D2487 – Classification of Soils for Engineering Purposes.

B. Compaction Testing Standards

1. In-place Density of Compacted Fill Material: Density determined in the field in accordance with ASTM D6938 – Standard Test Methods for In-Place Density and Water Content of Soil and Soil-Aggregate by Nuclear Methods (Shallow Depth).

2. Maximum Dry Density of Compacted Material: Determined in the laboratory in accordance with:

a. Cohesive Soils: Method C of ASTM D1557-12e1 – Standard Test Methods for Laboratory Compaction Characteristics of Soil Using Modified Effort (56,000 ft-lbf/ft^3 (2,700 kN-m/m^3)).

b. Cohesionless, Free Draining Soils: ASTM D4253 – Standard Test Methods for Maximum Index Density of Soils Using a Vibratory Table and D4254 –

Standard Test Methods for Maximum Index Density of Soils and Calculation of Relative Density.

C. References in this Section to soil classification types and standards shall have the meanings and definitions indicated in ASTM D2487 – Standard Practice for Classification of Soils for Engineering Purposes. Contractor shall be bound by all applicable provisions of ASTM D2487 in the interpretation of soil classifications.

1.06 SUBSURFACE INVESTIGATIONS

A. Geotechnical investigations for design purposes for this project were made by RHG Consultants in a report dated June 4, 2019.

B. This report is available for examination from the City upon request by bidders.

1.07 REFERENCE SPECIFICATIONS

A. Whenever the words "Standard Specifications" are referred to, the reference is to the State of California, Department of Transportation, latest edition.

1.08 CONTRACTOR SAFETY RESPONSIBILITIES

A. The Contractor shall be solely responsible for maintaining safe excavations:

1. Comply fully with 29 CFR Part 1926 OSHA Subpart P Excavations and Trenches requirements.

2. Provide necessary support to the sides of excavations.

3. Provide safe access to the Engineer’s sampling and testing within the excavation.

4. Provide safe access for backfill, compaction, and compaction testing.

5. Maintain excavations in a safe manner that shall not endanger property, life, health, or the project schedule.

B. All earthwork shall be performed in strict accordance with applicable law, including local ordinances, applicable OSHA, CalOSHA, California Civil Code, and California Department of Industrial Safety requirements.

PART 2 - PRODUCTS

2.01 MATERIALS

A. General Fill, Backfill, and Embankment Materials

1. Selected or processed clean earth, rock, or sand, free from grass, roots, brush, other vegetation, corrosive and hazardous materials, manmade objects, and debris.

2. Materials not defined as unsuitable as indicated below, except some materials listed as unsuitable may be used, if indicated on the Drawings or when acceptable to the Engineer, when thoroughly mixed with suitable materials to form a stable composite.

3. Obtain suitable materials from one or more of the following:

a. Onsite excavations and designated borrow areas.

b. Processed on-site materials.

c. Imported from offsite borrow areas and processing plants.

4. If imported materials are required by this Section, or to meet the quantity requirements of the Project, provide the imported materials at no additional expense to the Cityr, unless a unit price item is included for imported materials in the Bidding Schedule.

5. Further condition fill, backfill, and embedment materials as described below or as indicated on the Drawings.

B. Engineered Fill Material

1. Free of organic material

2. Granular, low to non-expansive soil.

3. Plasticity index 12 or less.

4. Liquid limit 30 or less.

5. R-Value (ASTM D2844): 10 minimum.

6. Complying with the grading shown in the following table:

Sieve Size	Percentage Passing
6-inch	100
4-inch	90-100
No. 200	10-60

7. Class 2 Aggregate Base Course Material may be used as Engineered Fill Material. The aggregate base material shall comply with the requirement specified herein for Aggregate Base Course Material.

C. Aggregate Base Course Material

1. Clean, hard, durable particles consisting of the any combination of the following:

a. Broken stone

b. Crushed gravel

c. Natural rough surfaced gravel

d. Sand

e. Processed reclaimed asphalt concrete, portland cement concrete (PCC), lean concrete base (LCB), or cement treated base (CTB).

2. Use either 1-1/2-inch unless otherwise indicated. Do not change grading without authorization from the Engineer.

3. Conform to the following gradation when tested in accordance with ASTM C136:

Sieve Sizes (Square Openings)	Percent by Weight Passing Sieve 1-1/2” Maximum
2”	100
1-1/2”	90-100

Sieve Sizes (Square Openings)	Percent by Weight Passing Sieve 1-1/2" Maximum
1-inch	-
3/4-inch	50-85
No. 4	25-45
No. 30	10-25
No. 200	2-9

4. Durability Index (ASTM D3744): 35 minimum.

5. Sand Equivalent (ASTM D2419): 25 minimum.

6. R-Value (ASTM D2844): 78 minimum.

D. Crushed Rock

1. Manufactured, angular, crushed stone with a minimum sand equivalent value of 75.

2. Clean, hard, sound, durable, uniform in quality, and free of soft, friable, thin, elongated or laminated pieces, and disintegrated material.

3. Have 100 percent of its particles with at least one fractured face on a weight basis, when tested for crushed particles per ASTM D5821.

4. Complying with the grading shown in the following table:

	Percentage Passing		
Sieve Size	1-inch	3/4-inch	1/2-inch
1-1/2-inch	100	-	-
1-inch	90-100	100	-
3/4-inch	30-60	90-100	100
1/2-inch	0-20	30-60	90-100
3/8-inch	-	0-20	20-60
No. 4	0-5	0-5	0-15
No. 8	-		0-5

2.02 UNSUITABLE MATERIALS

A. Unsuitable materials include the materials listed below:

1. Soils which, when classified under ASTM D2487, fall in the classifications of Pt, OH, CH, MH, or OL, or in a classification that contains Pt, OH, CH, MH, or OL in combination with any other letter designation, such as CH/CL.

2. Soils which cannot be compacted sufficiently to achieve the density specified for the intended use, or are unstable or pump regardless of the degree of compaction.

3. Materials that contain hazardous or designated waste materials including petroleum hydrocarbons, pesticides, heavy metals, and any material which may be classified as hazardous or toxic according to applicable regulations.

4. Soils that contain greater concentrations of chloride or sulfate ions, or have a soil resistivity or pH less than the average values for existing onsite soils.

5. Topsoil, sludge and sludge-entrained soils.

6. Rocks, stones, and boulders larger than allowed for use as fill and backfill materials.

2.03 SOURCE QUALITY CONTROL

A. Materials source testing will be performed by a testing laboratory by the Contractor.

B. Minimum Frequency of Sampling:

1. Fill, backfill and embankment material generated from earthwork activities:

a. Two soil samples every 500 cubic yard of material used.

b. Two soil samples whenever the character of the soil changes.

c. One soil sample when directed by the Engineer.

d. Obtain samples that represent the predominate character of the soil that is encountered.

2. Sampling of Imported Material

a. Obtain representative samples of product from supplier.

b. After demonstrating through initial testing that the proposed borrow material meets the specified requirements, obtain and test one additional sample for every 500 cubic yard of imported material.

C. Testing:

1. Test all materials used in the Work to confirm they meet the requirements indicated.

2. Prepare moisture-density curves for use in determining the optimum moisture content and in-place density of the compacted backfill.

PART 3 - EXECUTION

3.01 CONTROL OF WATER

A. All excavations shall be kept free from water and all construction shall be in the dry.

1. It should be presumed that the presence of groundwater will require dewatering operations. Furnish, install, maintain, and operate all necessary pumping and other equipment for dewatering all excavations. At all times have on the project sufficient pumping equipment for immediate use, including standby pumps for use in case other pumps become inoperable.

2. Provide a sufficient number of pumps so as to hold the groundwater level at an elevation of not less than 1 foot below the lowest elevation of the pipe, duct or other material to be placed.

3. Dispose of water in such a manner as to cause no injury or nuisance to public or private property, or be a menace to the public health.

4. The dewatering operation shall be continuous, so that the excavated areas shall be kept free from water during construction, while concrete is setting and achieves full strength, and until backfill has been placed to a sufficient height to anchor the work against possible flotation.

5. Continue dewatering during backfilling operations such that the groundwater is at least 1 foot below the level of the compaction effort at all times. No compaction of saturated materials will be allowed.

6. Dewatering devices must be adequately filtered to prevent the removal of fines from the soil.

7. The Contractor shall be responsible for any damage to the foundations or any other parts of existing structures or of the new work caused by failure of any part of the Contractor's protective works. After temporary protective works are no longer needed for dewatering purposes, they shall be removed by the Contractor.

8. If pumping is required on a 24-hour basis, requiring engine drives, then engines shall be equipped in a manner to keep noise to a minimum. Refer to Section 01560 for noise control requirements.

9. Prevent disposal of sediments from the soils to adjacent lands or waterways by employing whatever methods are necessary, including settling basins.

B. The Contractor shall be responsible for furnishing temporary drainage facilities to convey and dispose of surface water falling on or passing over the site.

3.02 EXISTING UTILITIES

A. Existing Underground Utilities:

1. Known existing underground utilities are generally shown on the Drawings in their approximate locations based on information of varying accuracy.

2. Review the design drawings, maps, and other sources of information and identify existing facilities at the site to determine and mark the approximate locations of underground facilities

3. Conduct field explorations to locate all underground utilities in the vicinity of the Earthwork activities. Perform field investigations prior to preparation of Shop Drawings for underground piping, and prior to excavation for installation of any underground facilities.

4. Exercise care to avoid damage to all existing utilities whether shown or not.

5. Alert the Engineer of the presence of existing utilities that are not shown on the Drawings or are in locations different than those shown on the Drawings.

B. Existing Overhead Utilities: There may be existing overhead utilities in the vicinity of the Work which may or may not be shown on the Drawings. Identify existing overhead utilities, if any, and use extreme caution when working in the vicinity of overhead utilities.

3.03 EXCAVATION – GENERAL

A. Excavation includes the removal of all materials of whatever nature encountered, including all obstructions of any nature.

B. Excavation shall conform to the lines and grades indicated on the Drawings.

C. Excavation Stability

1. Slope excavated faces or otherwise support in a safe manner in accordance with applicable State safety requirements and the requirements of OSHA Safety and Health Standards for Construction (29CFR1926).

2. Stability of temporary cut slopes, such as those constructed during the installation of underground utilities, are the responsibility of the Contractor. Cut slopes shall be excavated to 2H:1V or flatter.

3. Furnish, place, and maintain supports and shoring required to maintain stability of the sides of excavations.

D. Notify Engineer at least 1 working day in advance of completion of any structure excavation to allow inspection of the exposed subgrade before it is covered with backfill or with any construction materials.

E. Erosion Control:

1. Maintain earthwork surfaces true and smooth and protected from erosion.

2. Construct erosion control measures as required in the Technical Provisions, Article E-16.

3.04 EXCAVATION FOR FILLS AND EMBANKMENTS

A. Subgrade Preparation:

1. Subgrade Beneath Embankments:

a. Expose competent native soil within the planned new embankment footprint.

b. Scarify the exposed subgrade to a depth of 6 inches, moisture condition as necessary and re-compact.

2. Subgrade Beneath Paved Areas:

a. Excavate to the subgrade soils beneath the bottom of the aggregate base or to the subbase, if such subbase is indicated.

b. Scarify the top 6 inches of subgrade soils, moisture condition as necessary, and re-compact.

c. Finished subgrade shall be even, self-draining, and in conformance with the slope of the finished pavement.

3. Subgrade Beneath Structures:

a. Excavate to the subgrade soils beneath the bottom of the structure or bottom of crushed rock layer where indicated.

b. Scarify the top 12 inches of subgrade soils, moisture condition as necessary, and re-compact.

3.05 TRENCH EXCAVATION

A. Excavate trenches and maintain excavation such that pipe and pipeline accessories are installed in an open trench.

B. Excavate to subgrade elevation and to trench width dimensions indicated on the Drawings.

C. Excavate all materials of whatever nature encountered, including all obstructions of any nature that would interfere with the proper execution of the trenching Work unless otherwise indicated.

D. Where pipelines are to be installed in embankments, fills, or structure backfills, construct fill to a level at least one foot above the top of the pipe before the trench is excavated.

E. Trench shield:

1. If a moveable trench shield is used during excavation operations widen the trench width so that the shield is free to be lifted and then moved longitudinally without binding against the trench sidewalls.

2. If the trench walls cave in or slough, the trench shall be excavated as an open cut excavation with sloped sidewalls or with trench shoring, as indicated and as required by the pipe structural design.

F. Trench Bottom: Excavate and shape trench bottoms to provide uniform subgrade for placement of Bedding Material.

1. Unsuitable Hard Trench Bottom: If bottom of excavation is found to consist of rock or any material that cannot be excavated to provide uniform bearing surface:

a. Notify Engineer of the conditions encountered and obtain concurrence that an unsuitable trench bottom condition is present.

b. Remove such rock or other material to a depth of not less than 6 inches below the original design elevation of the bottom of the trench.

c. Place bedding material or aggregate base course material to restore the trench bottom to the original design elevation. Place in lifts not exceeding 8 inches in un-compacted thickness and compact to 90 percent of maximum dry density.

2. Unsuitable Soft Trench Bottom: If bottom of excavation is found to consist of soft or unstable material which is incapable of properly supporting pipe:

a. Notify Engineer of the condition encountered and obtain concurrence that an unsuitable trench bottom condition is present.

b. Remove such material to a depth and for the length required, as determined by the Engineer.

c. Place bedding material or aggregate base course material to restore the trench bottom to the original design elevation. Place in lifts not exceeding 8 inches in un-compacted thickness and compact to 90 percent of maximum dry density.

3.06 EXCAVATION FOR STRUCTURES

A. Unless otherwise indicated, provide excavations sufficient to leave at least 12 inches clear between structure outer surfaces and the face of the excavation or any shoring which may be used to support the face of the excavation.

B. Excavate to the subgrade soils beneath the bottom of the structure or bottom of crushed rock layer where indicated.

C. Scarify the top subgrade soils to a depth of 6 inches, moisture condition, and re-compact to 90 percent of maximum dry density.

3.07 OVER-EXCAVATION NOT ORDERED OR INDICATED

A. Backfill areas over-excavated with the materials indicated for the backfill above the over-excavation or Aggregate Base.

B. Backfill the over-excavation to restore the required subgrade elevation and compact.

C. Any over-excavation carried below the grade indicated on the Drawings will be at no additional cost to the City.

3.08 OVER-EXCAVATION WHERE ORDERED BY ENGINEER

A. Where ordered by the Engineer, over-excavate beyond the depth of subgrade indicated to the dimensions ordered.

B. Backfill areas over-excavated with the materials indicated for the backfill above the over-excavation or Aggregate Base.

C. Backfill the over-excavation to restore the required subgrade elevation.

D. Over-excavation less than 6 inches below the limits indicated: At no increase in cost to the City.

E. Over-excavation greater than 6 inches below the limits indicated: Payment will be made under separate unit price bid items for over-excavation if such bid items have been established. Otherwise, payment will be made in accordance with a negotiated price.

F. Measurement and Payment

1. Measurement of quantities for payment of over-excavation: By calculation by Engineer of the volume of materials removed as over-excavation based on the difference between the excavation dimensions before and after the over-excavation work. No compensation will be made for removal of materials beyond the limits of the additional excavation ordered by Engineer or for materials which may come into the excavation from outside the designated limits. No compensation will be made for removal of materials that are outside of the minimum horizontal dimensions indicated.

2. Payment for over-excavation will be made by the cubic yard. The payment shall include full compensation for furnishing all labor, materials, tools, equipment, and incidentals, and for doing all the work involved in excavating and backfilling the over-excavation completely. Payment shall also include full compensation for the removal and disposal of the excavated materials, import and installation of backfill materials, control of water in the excavation, excavation support, and all costs associated with interruption of construction operations during the review

of the foundations, over-excavation, backfill, and all other operations required for, or as a result of, over-excavation.

3.09 DISPOSAL OF UNSUITABLE, EXCESS EXCAVATED AND OTHER MATERIALS

A. Dispose unsuitable or excess excavated materials at an appropriate site selected by Contractor unless otherwise indicated.

B. Obtain required permits, landCity, and agency approvals for disposal of unsuitable and excess excavated materials and pay costs associated with the removal and disposal of the materials.

3.10 FILL AND EMBANKMENT CONSTRUCTION

A. Scarify foundation soils for fills and embankments bring to optimum moisture content, and re-compact with heavy compaction equipment to obtain compaction indicated.

B. Place and compact fill and embankments in horizontal layers so that when compacted layers to not exceed thickness indicated.

C. Provide keyways or benches where an embankment or fill is to be placed against slopes, hillsides, or fill slopes.

D. Slopes: Construct slopes as indicated except construct no permanent fill or embankment slopes with slope inclinations that exceed [2:1] (horizontal: vertical) unless specifically indicated otherwise

E. Over-construct fills and embankments to greater horizontal dimensions than indicated. Cut back slope following placement and compaction to expose well compacted fill.

F. Construct the first 3 feet of embankment or fills over pipelines using placement and compaction equipment that do not damage the pipe. Keep heavy construction equipment a minimum distance of the edge of the trench equal to the depth of the trench until at least 3 feet of fill over the pipe has been completed.

3.11 TRENCH BACKFILL

A. Place bedding and backfill materials true to the lines, grades, and cross-sections indicated on the Drawings and compacted to the degree specified on the Drawings. Place bedding and backfill materials in horizontal lifts not to exceed 6 inches in thickness measured before compaction. The difference in level on either side of a pipe shall not exceed 4 inches.

B. Backfill material shall not be placed over the pipe or conduit until after the joints have been completed and inspected by the Engineer.

C. It shall be incumbent upon the Contractor to protect the pipe or conduit from damage during the construction period. It shall be the Contractor's responsibility to repair broken or damaged pipe at no extra cost to the City. Carefully place backfill around and over the pipe. Tamping of backfill over the pipe shall be done with tampers, vibratory rollers and other machines that will not injure or disturb the pipe.

D. Do not allow construction traffic nor highway traffic over the pipe trench until the trench backfill has been brought back even with existing adjacent grade.

3.12 STRUCTURE BACKFILL

A. Provide Structure Backfill material within 12-inches of all structures to be backfilled unless otherwise indicated.

B. Place a 6-inch layer of 3/4-inch or 1-inch Crushed Rock below all structures, unless otherwise indicated.

C. Do not drop backfill upon any structure or pipe.

D. Confirm concrete structures have attained sufficient strength to withstand the backfill loads imposed.

E. Do not place backfill around water retaining structures until structures have been tested and approved for backfill. Fill structures with water during backfill operations.

F. Place backfill after all water has been removed from the excavation and the excavation sidewalls and subgrade soils have dried to a moisture content suitable for compaction.

G. Remove all loose, sloughing, or caving soils and rock materials prior to placement of backfill.

H. Place geotextile fabric as indicated.

I. Place backfill and spread evenly in layers so that when compacted layers do not exceed thickness indicated.

J. Thoroughly mix layers as necessary to promote uniformity of material in each layer.

K. Add water to backfill material where moisture content is below the optimum moisture content and mix with the soil until the proper moisture content is achieved throughout the soil layer.

L. Where backfill material moisture content is too high to permit the specified degree of compaction, dry backfill material until moisture content is satisfactory.

3.13 COMPACTION OF FILL, BACKFILL, AND EMBANKMENT MATERIALS

A. Adjust moisture condition of soils to achieve a water content of 3 percent, plus or minus 0.5 percent, above the optimum moisture content as determined through laboratory testing of the soil.

B. Compact each layer in a uniform and systematic manner.

C. For materials with less than 10 percent passing the No. 4 sieve, compact by means of at least 2 passes from a flat plate vibratory compactor.

D. For materials with 10 percent or more passing the No. 4 sieve, mechanically compact to the indicated percentage of density each layer of backfill materials.

1. Use equipment that is consistently capable of achieving the required degree of compaction.

2. Compact each layer over its entire area while the material is at the required moisture content.

E. Do not use flooding, ponding, or jetting as a method of compaction.

F. Do not use equipment weighing more than 10,000 lbs closer to structure walls than a horizontal distance equal to the depth of the fill at the time. Use hand operated power compaction equipment where use of heavier equipment is impractical or restricted due to weight limitations.

G. Compaction Requirements:

1. Where agency or utility company requirements govern, the highest compaction standards shall apply.

H. Compact finish and subgrades in compliance with the following table:

Location or Use of Fill	Limit/Layer Thickness	Percentage of Maximum Dry Density of Compacted Material per ASTM D1557
Embankment fill	12 in. Layers	90
Trench backfill	8 in. Layers	90
	Upper 6 in.	95
Subgrade beneath embankments or fill areas	Upper 6 in.	90
Subgrade beneath paved areas	Upper 6 in.	95
Subgrade beneath slab-on-grade	Upper 6 in.	95
Subgrade beneath buildings	Upper 12 in.	95

3.14 FIELD QUALITY CONTROL AND TESTING

A. Field quality control testing for compaction confirmation will be done by a testing laboratory of the City's choice at the City's expense except as indicated below.

B. If requested by the City, remove soil above the level at which the City wishes to test. Backfill and re-compact material after testing is completed.

C. If compaction fails to meet specified requirements, perform remedial work by one of the following methods:

1. Remove and replace backfill at proper density.

2. Bring density up to specified level by other means acceptable to City.

3. Retesting:

a. Costs for conducting additional tests to confirm and verify that remedial work has brought compaction within specified requirements shall be borne by the Contractor.

b. Conduct compaction tests at twice as frequently specified for the initial confirmation tests.

D. Where soil compaction is specified as a percentage of maximum dry density, determine the maximum dry density at optimum moisture content by laboratory testing in accordance with Method C of ASTM D1557.

E. Where compaction of cohesionless, free draining soil is specified as a percentage of relative density, determine relative density by laboratory testing in accordance with ASTM D4253 and D4254.

F. Determine In-Place Density of Compacted Fill Material by performing field tests of soil density in accordance with ASTM D6938.

G. Frequency of Compaction Confirmation Testing at intervals not less than as follows:

1. Embankments and Fills: 2 tests.

2. Structure Backfill: 3 tests (under building foundation, under tank foundation, and under filter foundation).

3. Trench Backfill: 2 tests (in different trenches).

3.15 FINISH GRADES

A. Surface: Reasonably smooth and free of grade breaks, irregular surface changes, protrusions and other defects.

B. Restore un-improved areas back to pre-construction grades.

C. Backfill topsoil in all areas where the topsoil was removed as part of the site preparation.

D. Restore drainage swales and water courses to their pre-construction alignments and grades unless otherwise modified by the Work. Grade surface to drain away from structures. Direct drainage to collection points.

E. Provide smooth transitions to existing grades.

F. Repair and reestablish grades to required elevations and slopes due to any settlement or erosion that may occur prior to final acceptance.

G. Vertical Tolerance:

1. Subgrade under paved areas: 0.0 feet above and 0.08 feet below.

2. Subgrade under structures: 0.0 feet above and 0.08 feet below.

3. Landscaped areas: 0.1 feet above and 0.1 feet below.

4. Unimproved areas: 0.1 feet above and 0.1 feet below.

END OF SECTION

SECTION 02740

ASPHALT PAVING

PART 1 - GENERAL

1.01 SECTION INCLUDES

A. Requirements for constructing asphalt paving shown.

B. Work includes, but is not necessarily limited to, earthwork, scarifying and preparing the subgrade, placing and compacting aggregate base, applying prime coat and tack coat, placing and compacting asphalt concrete, and all related work.

1.02 REFERENCED SECTIONS

A. The following Sections are referenced in this Section

1. Section 01330 – Submittals

2. Section 02300 – Earthwork

1.03 REFERENCED STANDARDS

A. State of California Department of Transportation Standard Specifications (Caltrans) 2024.

B. City of Milpitas Standard Specifications

1.04 SUBMITTALS

A. Comply with Section 01330.

B. Manufacturer's Data or Certificate of Compliance

1. Aggregate base

2. Tack coat

3. Asphalt design mix

4. Seal coat

5. Independent test laboratory hired by the Contractor

C. Furnish a certificate of compliance signed by the manufacturer prior to the use of any asphalt materials.

1. The certificate shall state that the material complies with the requirements of these Specifications.

2. Furnish a certificate with each lot of material delivered to the site with the lot certified clearly identified in the certificate.

3. Provide certificates of compliance for each type of asphalt product used.

PART 2 - PRODUCTS

2.01 GENERAL

A. Provide materials in accordance with:

1. Caltrans Specifications, as modified by this Section.

2. City of Milpitas Standard Specifications, as modified by this Section.

2.02 CLASS 2 AGGREGATE BASE

A. Class 2 aggregate base: As specified in Section 02300.

2.03 TACK COAT

A. Caltrans Specification, Section 39 and 94

B. Grade SS-1h asphalt emulsion.

2.04 ASPHALT CONCRETE

A. Hot Mixed Asphalt Concrete Job Mix Formula: Caltrans Specifications, Section 39 for Type A, Asphalt Concrete (1/2-inch maximum aggregate, medium grading).

B. Asphalt Binder: Caltrans paving asphalt, Caltrans Specifications, Section 92

1. PG 64-10

2.05 SEAL COAT

A. Caltrans Specification, Section 37 and 94

B. Grade SS-1 asphalt emulsion.

PART 3 - EXECUTION

3.01 PAVEMENT

A. Construct to the line, grade, and section indicated on the Drawings and in accordance with referenced State Specifications.

B. Sawcut existing asphalt paving that is adjacent to new pavement.

C. Prepare subgrade material per Section 02300.

D. Install geotextile in accordance with Section 02071.

E. Prepare aggregate base course in accordance with Section 02300.

F. Apply tack coat at a minimum residual rate specified for the underlying surface condition as shown in Caltrans Specifications, Section 39. Apply tack coat to all adjoin vertical surfaces no more than 8 hours prior to paving.

G. Place asphalt concrete to the requirements of Caltrans Specifications, Section 39, and Section 22.

1. Install in lifts a minimum of 2-inches thick unless otherwise indicated.

2. Install final lift at a maximum thickness of 2 inches.

H. Density of finished paving: not less than 91% nor greater than 97% of maximum theoretical density as determined by California Test 309 (CTM 309)

I. Tolerance of final grade

1. Not more than 0.05 foot from the elevations indicated on the drawings

2. All areas graded to drain

3.02 FOG SEAL

A. Apply asphaltic emulsion for fog seal coat to the requirements of Caltrans Specifications, Section 37 and Section 22.

3.03 TESTING

A. Contractor to provide the following Quality Control Testing

1. Aggregate Gradation

a. Test Method: California Test 202

b. Minimum sampling and testing frequency: 1 per 500 tons but no less than per day.

c. Point of Sampling: California Test 125

2. Asphalt binder content %

a. Test Method: California Test 379 or 382

b. Minimum sampling and testing frequency: 1 per 1000 tons but no less than per day.

c. Point of Sampling: Loose mix behind paver, see California Test 125.

B. Smoothness

1. Contractor to test in conformance to the requirements of Caltrans Specifications, Section 39-2.01.

2. City may conduct parallel smoothness testing.

3. If the top layer of pavement does not comply with the smoothness specifications, Contractor to correct in conformance with Caltrans Specifications, Section 39-2.01. No compensation will be made for smoothness correction.

C. Pavement Density Nuclear Gage Method

1. Contractor to provide quality control testing at locations based on a random sampling plan with not less than one test per five hundred (500) tons.

2. If the density does not fall within the density range, the Contractor may test at two additional locations within the same 500 tons and average the results of the three tests. This averaged result shall fall within the above-specified range.

3. Contractor shall notify the City prior to paving and provide contact information for Contractor's testing personnel.

4. City may conduct parallel quality assurance testing at its discretion in accordance with Caltrans test methods, 308, 309, and 375.

END OF SECTION

(THIS PAGE LEFT BLANK INTENTIONALLY)

SECTION 02821
CHAIN LINK FENCES AND GATES

PART 1 - GENERAL

1.01 SECTION INCLUDES

A. Chain link fences and gates.

1.02 SUBMITTALS

A. Product Data: Submit construction details, material descriptions, gate hardware, and other data completely describing products.

B. Shop Drawings: Submit drawings showing fence and gate details. Include gate elevation drawings, post anchorage details, bracing details, extension arms, and accessories

1.03 REFERENCE SPECIFICATIONS

A. Furnish chain link gate and materials in compliance with City specifications. Where City specifications and this specification conflict, City specification take precedence.

1.04 QUALITY ASSURANCE

A. Manufacturer: Specializing in the manufacturer of chain link fence products with at least 5 years of experience.

B. Fence installer: Company with demonstrated successful experience installing similar projects and products in accordance with ASTM F567 and having at least 5 years of experience installing chain link fencing.

C. Tolerances: Current published edition of ASTM specifications tolerances apply.

1.05 DELIVERY, STORAGE, AND HANDLING

A. Storage and Handling: Unload, store, and protect new and existing materials such that they are not damaged.

1.06 SEQUENCE AND SCHEDULING

A. Fences and Gates: May be constructed at any time after earthwork, pipe work, and structures to which fence is related have been completed, but prior to erosion control application.

PART 2 - PRODUCTS

2.01 MATERIALS

A. Steel Chain Link Fabric

1. Height: As indicated
2. Mesh: 1 inch
3. Size Wire: 9 gauge
4. Coating:
    a. Provide coating as indicated.

b. Zinc coated Steel Fabric, ASTM A392 hot dipped galvanized before or after weaving,

1) Class 2 (2.0 oz/sf).

c. Polymer Coated (Vinyl) Steel Fabric: ASTM F668.

1) Class 2a extruded and adhered.

2) Color: Black in compliance with ASTM F934

5. Fabric Selvage:

a. Knuckle finish top and bottom.

B. Steel Pipe Fence Framework

1. Steel Pipe and Rail:

a. Schedule 40 standard weight pipe in accordance with ASTM A1088

b. Minimum 1.8 oz/sf hot dip galvanized zinc interior and exterior coating

c. Minimum steel yield strength: 30,000 psi

2. Line Posts:

a. 2.375-inch outside diameter, 3.65 pounds per linear foot

3. End, Corner, Pull post:

a. 2.875-inch outside diameter, 5.79 pounds per linear foot

4. Top, Brace, Bottom and Intermediate Rails:

a. 1.90-inch outside diameter, 2.27 pounds per linear foot

5. Polymer Coated Pipe:

a. Provide polymer coated pipe where polymer coated fabric is used.

b. Coating: Polyester power coating, fused and adhered to exterior zinc coating in accordance with ASTM F1043.

c. Minimum Coating Thickness: 3 mils minimum.

d. Color: match fabric color.

C. Tension Wire

1. Metallic Coated Steel Marcelled Tension Wire

a. 7-gauge marcelled wire complying with ASTM A824

b. Zinc Coated, ASTM A871 Class 5 (2.0 oz/sf)

c. Galvanized coil spring wire.

2. Polymer Coated Steel Tension Wire

a. Provide polymer coated tension wire where polymer coated fabric is indicated.

b. 7-gauge wire complying with ASTM F1664. Wire gauge specified is the core wire gauge.

c. Provide polymer coated wire where polymer coated fabric is used.

1) Class 2a extruded and adhered.

d. Color: match fabric color.

D. Fittings

1. Tension and Brace Bands: Galvanized pressed steel complying with ASTM F626, minimum steel thickness of 12 gauge, minimum width of 3/4 inch and minimum zinc coating of 1.20 oz/sf. Secure bands with 5/16inch galvanized steel carriage bolts.

2. Terminal Post Caps, Line Post Loop Tops, Rail and Brace Ends, Boulevard Clamps, Rail Sleeves: In compliance to ASTM F626, pressed steel galvanized after fabrication having a minimum zinc coating of 1.20 oz/sf.

3. Truss Rod Assembly: In compliance with ASTM F626, 3/8-inch diameter steel truss rod with a pressed steel tightener, minimum zinc coating of 1.2 oz/sf, assembly capable of withstanding a tension of 2,000 lbs.

4. Tension Bars: In compliance with ASTM F626. Galvanized steel one-piece length 2 inch less than the fabric height. Minimum zinc coating 1.2 oz. /sf.

    a. Bars for 1 in. mesh shall have a cross section of 1/4 inch by 3/8 inch

5. Polymer Coated Color Fittings: In compliance with ASTM F626, PVC or Polyolefin coating minimum thickness 0.006 in. fused and adhered to the zinc coated fittings, match color to fence system

E. Tie Wire and Hog Rings

1. Galvanized minimum zinc coating 1.20 oz/sf, 9-gauge steel wire in compliance with ASTM F626.

2. 9-gauge aluminum alloy hog rings available for metallic coated fabric.

3. Polymer coated, match the coating, class and color to that of the chain link fabric.

F. Swing Gates

1. Galvanized steel pipe welded fabrication in compliance with ASTM F900.

2. Gate frame members 1.900-inch OD 2.72 lb/lf ASTM F1083 schedule 40 galvanized steel pipe.

3. Frame members spaced no greater than 8 feet. apart vertically and horizontally.

4. Welded joints protected by applying zinc-rich paint in accordance with ASTM Practice A780.

5. Positive locking gate latch, pressed steel galvanized after fabrication.

6. Galvanized malleable iron or heavy gauge pressed steel post and frame hinges.

7. Provide lockable drop bar and gate holdbacks with double gates.

8. Match gate fabric to that of the fence system.

9. Extend gate posts and frame members above the top of the chain link fabric at both ends of gate frame to provide support for barbed wire where barbed wire is indicated.

10. Polymer coated gate frames; match the coating type and color to that specified for the fence framework. Moveable parts such as hinges, latches and drop rods may be field coated using a liquid polymer touch up.

G. Gate Posts and Concrete Foundations for Gate Posts:

1. Gateposts per ASTM F1083 schedule 40 galvanized steel pipe.

Gate Leaf Widths, feet	Posts		Foundations	
	O.D., inches	Ounces per Lin Ft	Diameter, inches	Depth, feet
Gates with fence fabric up to and including 6 ft in height				
0 to 4	2.375	3.56	12	3
Over 4 to 10	2.875	5.79	12	4
Over 6 to 18	4.000	9.11	18	3
Gates with fence fabric over 6 ft to 12 ft in height				
0 to 6	2.875	5.79	12	4
Over 6 to 12	4.000	9.11	18	3
Over 12 to 18	6.625	18.97	18	4
Over 18 to 25	8.625	28.58	18	4.5

2. Polymer coated gate posts; match the coating type and color to that specified for the fence framework.

H. Concrete: Minimum 28-day compressive strength of 2,500 psi.

I. Fence Grounding:

1. Conductors: Bare, solid copper wire No. 6 AWG.

2. Connectors: Metal ground connectors, suitable for connecting to the ground rod and the metal fence post.

3. Ground rods: Copper clad, 5/8-inch diameter by 96-inch long.

PART 3 - EXECUTION

3.01 EXAMINATION

A. Verify field conditions prior to construction.

3.02 GENERAL

A. Install chain link fence and gates as indicated on the Drawings and specified in this Section.

B. Provide fence systems that are plumb, taut, true to line and grade, and complete in all details.

C. Install fencing to generally follow finish grade of ground and provide pull posts at points where required to conform to change in grade.

D. Install fencing such that space between bottom of fence and finish grade does not exceed 1 inch.

E. Unless otherwise indicated install fence with top rail and bottom tension wire.

3.03 CLEARING FENCE LINE

A. Survey, clear, grub, grade and remove debris for installation of the fence line or required clear areas adjacent to the fence as indicated. Where no requirements are indicated, provide minimum 10 feet wide cleared and graded area centered on the fence line.

3.04 INSTALLATION

A. Posts:

1. Set posts plumb in concrete footings in accordance with ASTM F567.
2. Unless otherwise indicated:
    a. Set minimum footing depth, 24 inches plus an additional 3-inch depth for each 1 foot increase in the fence height over 4 feet.
    b. Minimum footing diameter four times the largest cross section of the post up to a 4.00 inches outside diameter and three times the largest cross section of post greater than a 4.00 inches outside diameter.
    c. Top of concrete footing to be at grade, crowned to shed water away from the post.
    d. Line posts installed at intervals not exceeding 10 ft. (3.05 m) on center.
3. Finish top of concrete footings in a workmanlike manner.

B. Top Rail:

1. Install top rail in 21 foot lengths of rail continuous thru the line post or barb arm loop top.
2. Splice rail using top rail sleeves minimum 6-inches long.
3. Secure rail shall to terminal post by a brace band and rail end.

C. Bottom/Intermediate Rail:

1. Field cut and secure rail to line posts using boulevard clamps or brace band with rail end.

D. Terminal posts:

1. Brace and truss end, corner, pull and gate posts for fence 6 feet and higher and for fences 5 feet in height not having a top rail.
2. Install horizontal brace rail and diagonal truss rod in accordance with ASTM F567.

E. Tension wire:

1. Install tension wire 4 inches up from the bottom of the fabric.
2. Install tension wire 4 inches down from the top of the fabric where fence does not have a top rail.
3. Stretch tension wire taut, independently and prior to the fabric, between the terminal posts and secure to the terminal post using a brace band.
4. Secure the tension wire to each line post with a tie wire.

F. Chain Link Fabric:

1. Install fabric to outside of the framework.
2. Attach fabric to the terminal post by threading the tension bar through the fabric; secure the tension bar to the terminal post with tension bands and 5/16-inch carriage bolts spaced no greater than 12 inches on center.
3. Small mesh fabric less than 1 inch, attach to terminal post by sandwiching the mesh between the post and a vertical 2-inch-wide by 3/16-inch galvanized steel strap using carriage bolts, bolted thru the bar, mesh and post spaced 15 inches on center.
4. Stretch chain link fabric taut free of sag.
5. Secure fabric to line posts with tie wires spaced no greater than 12 inches on center and to horizontal rail spaced no greater than18 inches on center.
6. Secure fabric to the tension wire with hog rings spaced no greater than 18 inches on center.
7. Secure tie wires:
   a. Wrap tie wire around the post or rail and attach to the fabric wire picket on each side by twisting the tie wire around the fabric wire picket two full turns.
   b. Cut off excess wire and bend over to prevent injury.

G. Gate Installation

1. Swing Gates:
   a. Install swing gates and gateposts in compliance with ASTM F567.
   b. Direction of swing: as indicated.
   c. Install gates plumb in the closed position having a maximum bottom clearance of 2 inches.
   d. Install gates with hinge and latch offset opening no greater than 3 inches in the closed position.
   e. Install double gate drop bar receivers in a concrete footing minimum 8-inch diameter by 16 inch deep.
   f. Install gate leaf holdbacks for all double gates.
   g. Install electrically operated gates in compliance with ASTM F2200 and UL 325.
2. Nuts and Bolts
   a. Install carriage bolts with the head on the secure side of the fence.
   b. Peen over end of all bolts to prevent removal of the nut.

3.05 ADJUSTING

A. Adjust gate travel, stops, and operator position to meet field conditions.

3.06 FENCE GROUNDING

A. Install fence grounding where high-tension power lines cross fence line, fencing is within 150 feet horizontally of high-tension power lines or as indicated.

B. Grounding locations:

1. Power line crossing: At nearest fence post to crossing, nearest fence post each side of crossing at 150 feet from crossing, and at each gate within 150 feet of crossing.

2. Power line parallel: At nearest fence post to 150 foot intervals and at each gate.

C. Grounding method.

1. At each grounding location, drive ground rod vertically next to fence post until top is flush with finish grade.

2. Connect conductor to ground rod, fence post and fence fabric with metal connector.

3. Bond each gate with a flexible grounding strap.

3.07 CLEANING

A. Leave the area of the fencing neat and free of debris caused by the installation of the fence.

3.08 PROTECTION

A. Protect installed fences and gates against damage and, if damaged, repair prior to final acceptance.

END OF SECTION

(THIS PAGE LEFT BLANK INTENTIONALLY)

SECTION 03301

CAST-IN-PLACE CONCRETE

PART 1 - GENERAL

1.01 SECTION INCLUDES

A. Requirements for cast-in-place concrete work.

1.02 REFERENCED SECTIONS

A. The following Section is referenced in this Section

1. Section 01330 – Submittals

1.03 SUBMITTALS

A. Comply with Section 01330.

B. Shop Drawings

1. Reinforcing Steel: Prepare shop fabrication and field installation drawings in accordance with CRSI Manual of Standard Practice and ACI SP.

2. Layout drawings for construction joints.

C. Product Data: Waterstops, curing compound data.

D. Concrete Mix Design: Data on the concrete mix, including aggregate gradations and admixtures, in accordance with ASTM C94.

E. Quality Control Submittals

1. Manufacturer’s application instructions for curing compound.

2. Ready-mix delivery tickets for each truck in accordance with ASTM C94.

1.04 QUALITY ASSURANCE

A. Supplier Qualifications: A minimum of 5 years’ experience manufacturing ready-mixed concrete and that complies with ASTM C94 for production facilities and equipment.

B. Source Limitations: Use the same brand of cement from the same manufacturer's plant, obtain aggregate from one source, and obtain admixtures through one source from a single manufacturer.

C. Concrete and Reinforcement: Unless otherwise specified, meet the requirements of ACI 301 and 318.

D. Hot Weather Concreting: Conform to ACI 305R.

PART 2 - PRODUCTS

2.01 FORMWORK

A. Exposed Areas: Use hard plastic finished plywood.

B. Unexposed Areas: Use new ship lap or plywood.

C. Earth cuts may be used for forming footings.

2.02 CONCRETE

A. Ready-mixed meeting ASTM C94, Option A.

B. Portland Cement: ASTM C150, Type II.

C. Aggregates: Furnish from one source.

1. Natural Aggregates

a. Free from deleterious coatings and substances in accordance with ASTM C33, except as modified herein.

b. Free of materials and aggregate types causing pop outs, discoloration, staining, or other defects on surface of concrete.

2. Non-Potentially Reactive: In accordance with ASTM C33, Appendix XI, paragraph X1.1.

3. Aggregate Soundness: Test for fine and coarse aggregates in accordance with ASTM C33 and ASTM C88 using sodium sulfate solution.

4. Fine Aggregates

a. Clean, sharp, natural sand.

b. ASTM C33.

c. Materials Passing 200 Sieve: 4 percent maximum.

d. Limit deleterious substances in accordance with ASTM C33, Table 1 with material finer than 200 sieve limited to 3 percent, coal and lignite limited to 0.5 percent.

5. Coarse Aggregate

a. Natural gravels, combination of gravels and crushed gravels, crushed stone, or combination of these materials containing no more than 15 percent flat or elongated particles (long dimension more than five times the short dimension).

b. Materials Passing 200 Sieve: 0.5 percent maximum.

D. Admixtures: Do not use admixtures that contribute water-soluble chloride ions exceeding those permitted in hardened concrete. Do not use calcium chloride or admixtures containing calcium chloride.

1. Air-Entraining: ASTM C260.

2. Water-Reducing: ASTM C494, Type A or D.

3. Superplasticizers: ASTM C494, Type F or G.

4. Fly Ash: ASTM C618, Class C or F.

5. Color Pigments: Inert mineral or metal oxide pigments, natural or synthetic; resistant to lime and other alkalies.

E. Concrete Mix Design

1. Minimum Compressive Field Strength: 4,000 psi at 28 days when cured and tested in accordance with ASTM C31 and C39.

2. Coarse Aggregate Size: 1-1/2 inches and smaller.

3. Slump Range: 3 to 5 inches.

4. Air Entrainment: Between 1 and 3 percent by volume.

5. Water Reducers: Use in concrete without plasticizers.

F. Proportions

1. Design mix to meet aesthetic and structural concrete requirements.

2. Water-cement ratio (water-cement plus fly ash ratio) shall control amount of total water added to concrete as follows:

Coarse Aggregate Size	W/C Ratio
1-1/2 inch	0.50
1 inch	0.45

3. Minimum Cement Content (Combined Cement Plus Fly Ash Content):

a. 541 pounds per cubic yard for concrete with 1½ inch maximum size aggregate.

b. 564 pounds per cubic yard for 1 inch maximum size aggregate.

4. Increase cement content (combined cement plus fly ash content), as required meeting strength requirements and water-cement ratio.

5. Fly Ash Content: minimum 20 percent, maximum 50 percent by weight of total cement content.

G. Mixing: Minimum 70 and maximum 270 revolutions of mixing drum. Non-agitating equipment is not allowed.

2.03 REINFORCING STEEL

A. Deformed Bars: ASTM A615, Grade 60. Reinforcing steel to be welded shall be ASTM A706, Grade 60.

B. Welded Wire Reinforcement: ASTM A1064, fabricated from as-drawn steel wire into flat sheets.

C. Bar Supports:

1. For Slab Rebar: Concrete blocks or plastic bar supports.

2. For Rebar in Walls, Beams, Columns, and Slabs Exposed to View: Galvanized steel chairs with plastic tips or plastic bar supports and side form spacers.

2.04 ANCILLARY MATERIALS

A. Curing Compound

1. Material: Water-based product in accordance with ASTM C309, Type 1, Class A.

2. Manufacturers and Products

a. W. R. Meadows, Inc.; 1300-CLEAR

b. Euclid Chemical Co.; Kurex DR VOX

B. Epoxy Bonding Agent and Adhesives (for Binding New Concrete to Existing Concrete)

1. Epoxies: Two component material for use on dry or damp surfaces and conforming to the requirements of ASTM C881, Type II, Grade 2, Class C.

2. Apply in accordance with manufacturer's recommendations.

3. Manufacturers: One of the following or equal:

a. Sika Corporation; Sikadur-2 Hi-Mod LPL

b. Euclid Chemical Co.; DURAL LPL MV

C. Waterstops

1. General: Place hydrophilic and/or rubber dumbbell type or center bulb type waterstops at construction joints and other joints as specified and indicated on the Drawings.

2. Hydrophilic Waterstops:

a. Use: For concrete repairs or when attaching new concrete to existing structures.

b. Manufacturers: One of the following or equal:

1) Greenstreak, Hydrotite CJ.

2) Tremco, Parastop II.

c. Installation: As indicated on the Drawings and in accordance with manufacturer's instructions.

3. Rubber Waterstops

a. Use: At new construction joints where indicated on the Drawings.

b. Material: PVC or rubber waterstops manufactured by one of the following, or equal:

1) Greenstreak.

2) Progress Unlimited.

3) Williams Products.

c. Size:

1) Construction and Contraction Joints. 6-inch flat dumbbell type.

2) Expansion Joints: 9-inch wide dumbbell with hollow center bulb.

D. Expansion Joint Filler: ASTM D994, 1/2-inch thick, or as shown.

E. Surface Hardener

1. Premixed, noncolored, nonmetallic Master Builders, Mastercron; Sonneborn, Harcol; A. C. Horn Inc., Durafax; Burke Company Non-Metallic Floor Hardner; or equal.

2. Apply in accordance with manufacturer's instructions.

F. Concrete for Electrical Conduits

1. Concrete encasement for electrical conduit shall contain 3 pounds of red oxide per sack of cement.

G. Vapor Barrier

1. Material: 15 mil, multilayer plastic, 0.01 minimum permeance rating.

2. Manufacturers: One of the following or equal:

a. StegoWrap, Stego Industries.

b. Premoulded Membrane Vapor Seal with Plasmatic Corel, W. R. Meadows.

PART 3 - EXECUTION

3.01 FORMWORK

A. Design, construct, erect, brace and maintain formwork in accordance with ACI 301.

B. Form Ties

1. Fixed conical or spherical type inserts that remain in contact with forming material and allow for dry packing of form tie holes.

2. Space ties to withstand pressures and to limit deflection of forms to acceptable limits.

3. Wire ties are not acceptable.

C. Construction

1. In accordance with ACI 347.

2. Make joints tight to prevent escape of mortar and to avoid formation of fins.

3. Brace as required to prevent distortion during concrete placement.

4. On exposed surfaces locate form ties in uniform pattern or as shown.

5. Construct so ties remain embedded in the wall with no metal within 1-inch of concrete surface when forms, inserts, and tie ends are removed.

D. Form Removal

1. Remove after concrete has attained 28 day strength, or approval is obtained in writing from Engineer.

2. Remove forms with care to prevent scarring and damaging the surface.

3.02 PLACING REINFORCING STEEL

A. Place reinforcing steel in accordance with CRSI Recommended Practice for Placing Reinforcing Bars.

B. Field bending or welding of reinforcing bars will not be allowed.

C. Bar Supports: Provide in sufficient quantity to prevent sagging and to support bars during concrete placement.

D. Splices and Laps

1. Top Bars: Horizontal bars placed such that 12 inches of fresh concrete is cast below in single placement.

2. Horizontal wall bars are considered top bars.

3. Bar lap splices shall conform to General Structural Notes on the Drawings.

4. Tie splices with 18-gauge annealed wire as specified in CRSI Standard.

3.03 PLACING CONCRETE

A. Place concrete in accordance with ACI 301.

B. Before placing concrete:

1. Check reinforcing steel for proper placement and correct discrepancies.

2. Remove excessive rust, mill scale, dirt, oil and other material from rebar that may adversely affect bonding to concrete.

3. Remove water from excavation and debris and foreign material from forms.

C. Before depositing new concrete on existing concrete, clean surface using sandblast or other mechanical means to obtain a 1/4-inch rough profile, and apply epoxy bonding agent in accordance with the manufacturer's instructions.

D. Place concrete as soon as possible after leaving mixer, without segregation or loss of ingredients, without splashing forms or steel above, and in layers not over 2 feet deep. Place within 1-1/2 hours after adding cement to mix.

E. Placement Limitations: 8 feet maximum vertical drop to final placement, when not guided with chutes or other devices to prevent segregation due to impact with reinforcing.

F. Hot Weather

1. Prepare ingredients, mix, place, cure, and protect in accordance with ACI 305R.

2. Maintain concrete temperature below 80 degrees F at time of placement, or furnish test data or provide other proof that admixtures and mix ingredients do not produce flash set plastic shrinkage, or cracking due to heat of hydration. Ingredients may be cooled before mixing to maintain fresh concrete temperatures at 80 degrees F or less.

3. Make provisions for windbreaks, shading, fog spraying, sprinkling, ice, or wet cover, or other means to provide concrete with temperature specified.

4. Maximum allowable temperature differential between reinforcing steel and concrete: Not greater than 20 degrees F at the time of concrete placement.

3.04 COMPACTION

A. Vibrate concrete as follows:

1. Apply approved vibrator at points spaced not farther apart than vibrator's effective radius.

2. Apply close enough to forms to vibrate surface effectively but not damage form surfaces.

3. Vibrate until concrete becomes uniformly plastic.

4. Vibrator must penetrate fresh placed concrete and into previous layer of fresh concrete below.

3.05 CONSTRUCTION JOINTS

A. Locate as shown or as approved.

B. Maximum Spacing Between Construction Joints: 40 feet, unless otherwise indicated.

3.06 CRACK CONTROL JOINTS

A. Provide crack control joints in concrete slabs on grade, curbs, gutters, sidewalks and other concrete flatwork as follows:

1. Install crack control joints by use of grooving tool on fresh concrete or saw-cut by use of a saw designed for crack control joints as soon as the concrete hardens sufficiently to support the saw, however, no longer than 12 hours after concrete placement.

2. Depth: 1/4 the thickness of the slab.

3. Frequency: Unless otherwise indicated,

a. Maximum spacing of 2.5 times the slab thickness in feet (6-inch slab ≤ 15 feet on center).

b. Rectangular slabs: Maximum 1½ to 1 ratio of side lengths.

3.07 SLAB FINISHES

A. General

1. The finishes specified herein include surface finishes, treatments and toppings for floors and slabs. Floors shall be sloped to drain uniformly. Unless otherwise specified, slope shall be minimum 1/8 inch per foot towards nearest drain. Where finish is not specified, floor slabs shall receive steel troweling. Dry cement shall not be used on new concrete surfaces to absorb excess moisture. Edges shall be rounded to a radius of 1/2 inch. Joints shall be grooved to a radius and depth of 1/2 inch each. Uneven-slope tolerance is 1/4-inch in 10 feet.

B. Float Finish

1. Conform to ACI 301, Section 11.7.2. Floating shall be performed with a hand or power-driven float. Floating of any one area shall be the minimum necessary to produce the finish specified. Floating shall compact and smooth the surface and close any cracks and checking of surfaces.

C. Broomed Finish

1. Conform to ACI 301, Section 11.7.4. Broomed finish shall be provided for walks, slabs on grade exposed to atmosphere, and where otherwise indicated or specified. Apply float finish, then a light broom finish to produce a profile that is parallel to the slab drainage.

D. Steel Trowel Finish

1. Conform to ACI 301, Section 11.7.3. Immediately after final troweling, the surface shall be cured and protected. Steel trowel finish shall be provided on chemical room floor unless specified otherwise. Surface hardener shall be troweled into the finished surface.

3.08 FINISHING AND PATCHING FORMED SURFACES

A. Unexposed Surfaces: Provide rough-formed concrete texture as imparted by form-facing material, fill form tie holes with nonshrink grout and grind off projections, fins, and rough spots.

B. Exposed Surfaces: Provide smooth-formed concrete texture as imparted by form-facing material, arranged in an orderly and systematic manner with a minimum number of seams. Fill form tie holes with nonshrink grout and grind off projections, fins, and rough spots. Where scheduled, apply rubbed surface as follows:

1. Smooth Rubbed Finish: Not later than one day after form removal, moisten concrete surfaces and rub with carborundum brick or another abrasive to produce a uniform color and texture. Do not apply cement grout other than that created by the rubbing process.

2. Grout-Cleaned Finish: Wet concrete surfaces and apply grout of a consistency of thick paint to coat surfaces and fill small holes.

a. Mix one part portland cement to one and one-half parts fine sand with a 1:1 mixture of bonding admixture and water. Add white portland cement in amounts determined by trial patches so color of dry grout will match adjacent surfaces.

b. Scrub grout into voids and remove excess grout. When grout whitens, rub surface with clean burlap and keep surface damp by fog spray for at least 36 hours.

3. Cork-Floated Finish: Wet concrete surfaces and apply a stiff grout.

a. Mix one part portland cement and one part fine sand with a 1:1 mixture of bonding agent and water. Add white portland cement in amounts determined by trial patches so color of dry grout will match adjacent surfaces.

b. Compress grout into voids by grinding the concrete surface in a swirling motion, then finish the surface with a cork float.

C. Patching Defective Areas: Patch defective areas and repair rough spots resulting from form release agent failure or other reasons to provide smooth uniform appearance.

1. Cut out honeycombed and defective areas.

2. Cut edges perpendicular to surface at least 1-inch deep. Do not feather edges. Soak area with water for 24 hours.

3. Finish surfaces to match adjacent concrete.

4. Keep patches damp for minimum 7 days or spray with curing compound to minimize shrinking.

3.09 PROTECTION AND CURING

A. Protect fresh concrete from direct rays of sunlight, drying winds, and wash by rain.

B. Keep concrete slabs continuously wet for a 7 day period. Intermittent wetting is not acceptable.

C. Use curing compound only where approved by Engineer. Cure formed surfaces with curing compound applied in accordance with manufacturer's directions as soon as forms are removed and finishing is complete.

1. Do not use curing compound on concrete surfaces that will be painted.

D. Remove and replace concrete damaged by freezing.

3.10 FIELD QUALITY CONTROL

A. Concrete Samples:

1. Provide concrete for making composite samples for testing slump, air content, and for making cylinders for determination of compressive strength.

2. Prepare samples in accordance with ASTM C172. Select trucks or batches of concrete on a random basis.

3. Samples may be obtained at the discharge chute of the truck or at the point of discharge into forms.

B. Sampling Frequency: One composite sample for each 100 cubic yards of structural concrete, or fraction thereof, of each concrete mixture placed in any one day.

C. Evaluation will be in accordance with ACI 301, Chapter 17 and Specifications.

D. Slump tests and concrete cylinders will be made by the City. City will handle cured test cylinders, transport to the testing laboratory and pay testing costs.

E. Enforcement of Compressive Strength Requirements:

1. Compressive strength of concrete will be considered acceptable if the following conditions are satisfied:

a. Averages of all sets of 3 consecutive strength test results are greater or equal to the specified compressive strength.

b. No individual strength test (average of 2 cylinders) falls below specified compressive strength by more than 500 pounds per square inch.

2. Whenever one, or both, of 2 conditions stated above is not satisfied, provide additional curing of affected portion of structure, then obtain test cores from the affected area.

a. Obtain 3 test cores in accordance with ASTM C 42 and ACI 318.

b. Concrete will be considered acceptable if the average compressive strength of the 3 test cores is equal to at least 90 percent of the specified 28-day compressive strength and no single core is less than 80 percent of the specified 28-day compressive strength.

c. Concrete will be designated as defective when the specified conditions are not achieved.

d. Fill core holes with concrete.

3. Engineer may require the Contractor to strengthen defective concrete by means of additional concrete, additional reinforcing steel, or replacement of defective concrete, all of the Contractor's expense.

END OF SECTION

SECTION 03600

GROUT

PART 1 - GENERAL

1.01 SECTION INCLUDES

A. Grout for uses other than masonry.

1.02 REFERENCED SECTIONS

A. The following Sections are referenced in this Section

1. Section 01330 – Submittals
2. Section 03301 – Cast-In-Place Concrete

1.03 SUBMITTALS

A. Comply with Section 01330.

B. Manufacturer's Data

1. Provided for the following:
    a. Dry pack grout
    b. Cement grout
    c. Nonshrink grout, non-metallic
    d. Nonshrink grout, metallic
    e. Pressure grout
    f. Epoxy grout
    g. Polymer concrete

C. Laboratory Test Reposts

1. Test reports on previously tested materials shall be accompanied by the manufacturer's statement that the previously tested material is the same type, quality, manufacture, and make as that proposed for use in this project.
2. Test reports are required for the following:
    a. Cement
    b. Aggregates
    c. Bonding compounds
    d. Admixtures

PART 2 - PRODUCTS

2.01 MATERIALS

A. Cement

1. Portland cement: ASTM C150 Type II or Type V, low alkali, containing less than 0.60 percent alkalis.

B. Aggregate

1. General

a. Nonreactive and washed before use.

b. When sources of aggregate are changed, provide test reports for the new material.

c. Perform the tests specified prior to commencing grout work.

2. Fine Aggregate

a. Hard, dense, durable particles of either sand or crushed stone regularly graded from coarse to fine and shall conform to ASTM C33 as modified herein.

b. When tested in accordance with ASTM C136, gradation shall be such that 100 percent by weight will pass a standard No. 8 mesh sleeve and no less than 45 percent by weight will pass a standard No. 40 mesh sieve.

3. Variation from the specified gradations in individual tests will be acceptable if the average of three consecutive tests is within the specified limits and the variation is within the permissible variation listed below:

US standard sieve size	Permissible variation in individual tests, percent
30 or coarser	2.0
50 or finer	0.5

4. Other tests shall be in accordance with the following specifications:

Test	Test Method	Requirements
Organic Impurities	ASTM C40	Color lighter than standard
Amount of Material Passing No. 200 Sieve	ASTM C117	3% maximum by weight
Soundness	ASTM C88	10% maximum loss with sodium sulfate
Reactivity	ASTM C289	Innocuous aggregate
Sand Equivalent	ASTM D2419	Minimum 80

C. Admixtures

1. General

a. Compatible with the grout.

b. Calcium chloride or admixtures containing calcium chloride are not acceptable.

c. Used in accordance with the manufacturer's recommendations and added separately to the grout mix.

2. Water Reducing Retarder

a. ASTM C494 Type D.

b. Master Builders Pozzolith 300-R, Sika Corporation Plastiment, or equal.

3. Lubricant for Cement Pressure Grouting

a. Lubricant additive for cement pressure grouting shall be Intrusion Prepakt Intrusion Aid, Sika Intraplast N, or equal.

D. Water

1. Water for washing aggregate, for mixing and for curing shall be free from oil and deleterious amounts of acids, alkalis, and organic materials; shall not contain more than 500 mg/1 of chlorides as Cl, nor more than 800 mg/1 of sulfates as SO_4; and shall not contain an amount of impurities that may cause a change of more than 25 percent in the setting time of the cement nor a reduction of more than five percent in the compressive strength of the grout at 14 days when compared with the result obtained with distilled water.

2. Additionally, water used for curing shall not contain an amount of impurities sufficient to discolor the grout.

2.02 GROUT

A. Drypack Grout

1. A mixture of approximately one part cement, 1-1/2 to 2 parts sand, water reducing retarder, and sufficient water to make a stiff workable mix.

B. Cement Grout

1. A mixture of one part cement, two parts sand, proportioned by volume, admixtures for pressure grouting, and sufficient water to form a workable mix.

C. Nonshrink Grout, Non-Metallic

1. Nonshrink, nonmetallic aggregate grout shall be Five Star Products, Inc. Five Star Grout, Master Builders Masterflow 928, Euclid Chemical Co. High-Flow Grout, or equal.

D. Nonshrink grout, Metallic

1. Nonshrink, metallic grout shall be Master Builders MasterFlow 885, Euclid Chemical Co. High-Flow Metallic Grout, or equal.

E. Epoxy Grout for Crack Repair

1. Except as noted below, epoxy grout shall be a high modulus, two-component, moisture insensitive, 100 percent solids, thermosetting modified polyamide epoxy compound.

a. The consistency shall be a paste form capable of not sagging in horizontal or overhead anchoring configurations.

b. Material shall conform to ASTM C881 Type 1, Grade 3, such as Master Builders MasterEmaco ADH 327, Sika Corporation Sikadur Hi-Mod Series, Adhesive Technology Corporation Solidbond 200 or equal, and shall have a heat deflection temperature in excess of 130 degrees F.

2. Epoxy for pressure grouting/crack injection shall be a two-component, moisture insensitive, high modulus, injection grade, 100 percent solids, blend of epoxy-resin compounds.

a. The consistency shall be as required to achieve complete penetration in hairline cracks and larger.

b. Material shall conform to ASTM C881 Type 1 Grade 1, such as Sika Corporation Sikadur 52, Master Builders MasterInject 1500, Adhesive Technology Corporation SLV 300 series, or equal.

F. Polymer Concrete (For Resurfacing or Patching)

1. Polymer concrete (for resurfacing or patching) shall consist of a liquid binder and dry aggregate mixed together to make a mortar or grout of a consistency as required for the application.

2. The liquid binder shall be a chemical and oil resistant, stress relieved, low modulus, moisture insensitive, two-component epoxy-resin compound.

3. The consistency shall be similar to lightweight oil for proper mixing with aggregate.

4. Material shall conform to ASTM C881 Type 3 Grade 1, such as Sika Corporation Sikadur Lo-Mod series, Master Builders MasterSeal 350, Adhesive Technology Corporation 400 series, or equal.

5. The aggregate shall be oven dry in sealed packages until time of mixing, and shall be of size and consistency compatible with recommendations of manufacturer of liquid binder for intended application.

2.03 PRESSURE GROUTING EQUIPMENT

A. Pressure grouting equipment shall include a mixer and holdover agitator tanks and shall be designed to place grout at pressures up to 50 psi.

B. Provide gages to indicate pressure used.

C. The mixer shall be provided with a meter capable of indicating to one-tenth of a cubic foot the volume of grout used.

PART 3 - EXECUTION

3.01 GENERAL

A. Bonding compound for use with grout is specified in Section 03301. Primer, if required for polymer concrete, shall be provided per manufacturer's recommendation.

3.02 DRYPACK GROUT

A. Use drypack grout for built-up surfaces, setting miscellaneous metal items and minor repairs.

B. Surfaces required to be built up with drypack grout shall be roughened by brushing, cleaned, and coated with the bonding compound specified in Section 03301 before the application of the grout.

C. Apply drypack grout immediately following the application of the bonding compound in bands or strips to form a covering of the required thickness. The covering shall be smooth.

D. Construction joints in the grout shall be sloped and shall be cleaned and wetted before application is resumed.

E. Cure drypack grout in accordance with Section 03301.

F. Grout shall not be placed during freezing weather unless adequate protection is provided.

3.03 CEMENT GROUT

A. Use cement grout for filling nonbearing portions of equipment pads and pressure grouting.

B. Except for the specialized equipment for pressure grouting, mixing and placing apparatus shall be similar to that normally used for cast-in-place concrete.

C. Mix grout for a period of at least 1 minute.

D. Agitate diluted grout to keep ingredients mixed.

3.04 NONSHRINK GROUT

A. Nonshrink, metallic aggregate grout shall be used for the bearing surfaces of machinery and equipment bases, column base plates and bearing plates at dry, interior locations.

B. Nonshrink, non-metallic aggregate grout shall be used for the bearing surfaces of machinery and equipment bases, column base plates, and bearing plates at damp or exterior locations as well as for setting handrail, guardrail, or fence posts in pipe sleeves. Grout shall meet the requirements of CRD-C621 and shall be placed in accordance with manufacturer's instructions.

3.05 EPOXY GROUT

A. Epoxy grout shall be used for repairing cracks by pressure grouting or gravity flow and for repairing structural concrete.

B. Concrete shall be primed in accordance with the grout manufacturer's instructions.

3.06 PRESSURE GROUTING

A. Prior to grouting, systems and holes to be grouted shall be washed clean.

B. Washing is not required for grouting soil voids outside pipe cylinders or casing pipes.

C. Grouting, once commenced, shall be completed without stoppage.

D. In case of breakdown of equipment, wash out the grouting system sufficiently to ensure fresh grout and adequate bond and penetration will occur upon restarting the grouting operation.

E. Maintain grout pressure until grout has set.

END OF SECTION

(THIS PAGE LEFT BLANK INTENTIONALLY)

SECTION 04200

CONCRETE MASONRY UNITS

PART 1 - GENERAL

1.01 SECTION INCLUDES

A. Concrete masonry units, mortar, grout, and reinforced masonry construction.

1.02 REFERENCED SECTIONS

A. The following Sections are referenced in this Section

1. Section 01330 – Submittals

2. Section 09900 – Coating Systems

1.03 SUBMITTALS

A. Comply with Section 01330.

B. Product Data: For each type of masonry unit, masonry accessory, and admixture to be incorporated into the Work.

C. Shop Drawings: Submit reinforcement placing drawings with details of bond beams and lintels. Comply with ACI 315, "Details and Detailing of Concrete Reinforcement." Show elevations of reinforced walls with locations of control joints and wall penetrations.

D. Samples for each type and color of exposed masonry units and colored mortars.

E. Material Certificates: For each type of product indicated. Include statements of material properties indicating compliance with requirements including compliance with standards and type designations within standards.

F. Mix Designs: For each type of mortar and grout. Include description of type and proportions of ingredients.

1.04 QUALITY ASSURANCE

A. Preconstruction Testing Service: Contractor shall engage a qualified independent testing agency to perform preconstruction testing indicated below. Payment for these services shall be made by Contractor.

1. Concrete Masonry Unit Test: For each type of unit required, per ASTM C140.

2. Mortar Test (Property Specification): For each mix required, per ASTM C780.

3. Grout Test (Compressive Strength): For each mix required, per ASTM C1019.

B. Sample Panels: Build sample panels to verify selections made under sample submittals and to demonstrate aesthetic effects. Build sample panels for typical exterior wall in sizes approximately 48 inches long by 48 inches high.

1.05 PROJECT CONDITIONS

A. Cold-Weather Requirements: Do not use frozen materials or materials mixed or coated with ice or frost. Do not build on frozen substrates. Remove and replace unit masonry damaged by frost or by freezing conditions. Comply with cold-weather construction requirements contained in ACI 530.1/ASCE 6/TMS 602.

B. Hot-Weather Requirements: Comply with hot-weather construction requirements contained in ACI 530.1/ASCE 6/TMS 602.

PART 2 - PRODUCTS

2.01 CONCRETE MASONRY UNITS

A. General

1. Modular dimensions and air, water, or steam cured.

2. Surface Texture: Provide split-face, scored split-face, or ground-face blocks where indicated on the Drawings. At other locations, provide precision masonry units with comparatively smooth and uniform surface texture.

B. Hollow Load Bearing Concrete Masonry Units

1. Provide hollow load-bearing units conforming to ASTM C90, made with lightweight aggregate.

2. Provide load-bearing units unless otherwise specified.

3. Unit Compressive Strength: Provide units with minimum average net-area compressive strength of 2,000 psi.

4. Weight Classification: Light weight.

C. Special Shapes: Provide special shapes for lintels, corners, jambs, sashes, movement joints, headers, bonding, and other special conditions.

D. Size and Color: Nominal 16-inch long by 8-inch wide by 8-inch tall units arranged to form a running bond pattern as indicated on the Drawings. Color to be the Manufacturer's standard Tan color or as selected by City from submitted color palette.

E. Water Repellent and Anti-Graffiti Coatings: As indicated in Section 09900.

2.02 MORTAR MATERIALS

A. Cementitious Materials

1. Portland Cement: Conforming to ASTM C150, Type I or II. Type III may be used for cold-weather construction upon approval of the Engineer.

2. Hydrated Lime: Conforming to ASTM C207, Type S.

3. Mortar Cement: Conforming to ASTM C1329.

B. Sand for Mortar: Conforming to ASTM C144.

1. For joints less than 1/4 inch thick, use aggregate graded with 100 percent passing the No. 16 sieve.

C. Water-Repellent Admixture: Liquid water-repellent mortar admixture intended for use with concrete masonry units and formulated to minimize efflorescence while enhancing the bond between the mortar and masonry units.

1. Products: One of the following, or equal:

a. Addiment Incorporated; Mortar Tite.

b. Grace Construction Products; Dry-Block Mortar Admixture.

c. Master Builders, Inc.; Color Cure Mortar Admix or Rheomix Rheopel.

D. Water: Use potable water.

2.03 GROUT MATERIALS

A. Cementitious Materials

1. Portland Cement: Conforming to ASTM C150, Type I or II. Type III may be used for cold-weather construction upon approval of the Engineer.

2. Hydrated Lime: Conforming to ASTM C207, Type S.

B. Fine and Coarse Aggregates: Conforming to ASTM C404.

C. Water: Use potable water.

2.04 MORTAR AND GROUT MIXES

A. Mortar for Unit Masonry: Comply with ASTM C270, Property Specification, Type S.

B. Grout for Unit Masonry: Proportion by volume in accordance with ASTM C476 to achieve a minimum compressive strength of 2,500 psi.

1. Use grout of type indicated or, if not otherwise indicated, of type (fine or coarse) that will comply with Table 1.15.1 in ACI 530.1/ASCE 6/TMS 602 for dimensions of grout spaces and pour height.

2. Provide grout with a slump of 8 to 11 inches as measured according to ASTM C143.

C. Epoxy Pointing Mortar: Mix epoxy pointing mortar to comply with mortar manufacturer's written instructions.

2.05 REINFORCEMENT

A. Uncoated Steel Reinforcing Bars: Conforming to ASTM A615, Grade 60.

B. Horizontal Joint Reinforcement

1. Cold drawn steel wire conforming to ASTM A82, hot dipped galvanized after fabrication in accordance with ASTM A153.

2. Acceptable Configurations:

a. Truss type with two or more longitudinal wires welded to a continuous diagonal cross wire.

b. Ladder type with perpendicular cross wires not more than 1 inch on center.

3. Dimensions:

a. Provide in 10-foot long flat sections.

b. Preformed Tees and Corner reinforcement: Approximately 30 inches long.

c. Overall Width: Approximately 2 inches less than the nominal wall thickness.

2.06 MISCELLANEOUS MASONRY ACCESSORIES

A. Compressible Filler: Premolded filler strips complying with ASTM D1056, Grade 2A1; compressible up to 35 percent; formulated from neoprene.

B. Preformed Control-Joint Gaskets: Made from styrene-butadiene-rubber compound, complying with ASTM D2000, Designation M2AA-805 and designed to fit standard sash block and to maintain lateral stability in masonry wall.

C. Bond-Breaker Strips: Asphalt-saturated, organic roofing felt complying with ASTM D226, Type I (No. 15 asphalt felt).

2.07 MASONRY CLEANERS

A. Acidic Cleaner: Manufacturer's standard-strength cleaner designed for removing mortar/grout stains from new masonry without damaging masonry. Use product approved for intended use by cleaner manufacturer and manufacturer of masonry units being cleaned.

B. Manufacturers: One of the following or equal:

1. Diedrich Technologies, Inc.

2. EaCo Chem, Inc.

3. ProSoCo, Inc.

PART 3 - EXECUTION

3.01 INSTALLATION, GENERAL

A. Use full-size units without cutting if possible. If cutting is required, cut units with motor-driven saws; provide clean, sharp, unchipped edges. Allow units to dry before laying unless wetting of units is specified. Install cut units with cut surfaces and, where possible, cut edges concealed.

B. Select and arrange units for exposed unit masonry to produce a uniform blend of colors and textures.

C. Comply with tolerances in ACI 530.1/ASCE 6/TMS 602 and with the following:

1. For conspicuous vertical lines, such as external corners, door jambs, reveals, and expansion and control joints, do not vary from plumb by more than 1/8 inch in 10 feet, 1/4 inch in 20 feet, or 1/2 inch maximum.

2. For conspicuous horizontal lines, such as lintels, sills, parapets, and reveals, do not vary from level by more than 1/8 inch in 10 feet, 1/4 inch in 20 feet, or 1/2 inch maximum.

3.02 LAYING MASONRY WALLS

A. Lay out walls in advance for accurate spacing of surface bond patterns with uniform joint thicknesses and for accurate location of openings, movement-type joints, returns, and offsets. Avoid using less-than-half-size units, particularly at corners, jambs, and, where possible, at other locations.

B. Bond Pattern for Exposed Masonry: Unless otherwise indicated, lay exposed masonry in running bond; do not use units with less than nominal 4-inch horizontal face dimensions at corners or jambs.

C. Step back unfinished walls for joining with new walls, toothing will not be permitted.

D. Built-in Work: Build in door and window frames, fan and louver openings, pipe and conduit sleeves, and other items as the masonry construction progresses. Fill in solidly with masonry around built-in items.

E. Fill space between steel frames and masonry solidly with mortar, unless otherwise indicated.

F. Completely fill all cores in hollow concrete masonry units with grout.

3.03 MORTAR BEDDING AND JOINTING

A. Lay hollow concrete masonry units as follows:

1. With face shells fully bedded in mortar and with head joints of depth equal to bed joints.

2. With webs fully bedded in mortar in grouted masonry, including starting course on footings.

B. Lay solid masonry units with completely filled bed and head joints; butter ends with sufficient mortar to fill head joints and shove into place. Do not deeply furrow bed joints or slush head joints.

C. Tool exposed joints slightly concave when thumbprint hard, using a jointer larger than joint thickness, unless otherwise indicated.

D. Cut joints flush for masonry walls to receive plaster or other direct-applied finishes (other than paint), unless otherwise indicated.

3.04 REINFORCED UNIT MASONRY INSTALLATION

A. Temporary Formwork and Shores: Construct formwork and shores as needed to support reinforced masonry elements during construction.

1. Construct formwork to provide shape, line, and dimensions of completed masonry as indicated. Make forms sufficiently tight to prevent leakage of mortar and grout. Brace, tie, and support forms to maintain position and shape during construction and curing of reinforced masonry.

2. Do not remove forms and shores until reinforced masonry members have hardened sufficiently to carry their own weight and other temporary loads that may be placed on them during construction.

B. Placing Reinforcement: Comply with ACI 530.1/ASCE 6/TMS 602.

C. Grouting

1. Grout Types:

a. Use fine grout in grout spaces that are less than 2 inches in any horizontal dimension after deducting the thickness of horizontal reinforcement.

b. Use fine grout in grout spaces where clearance between the reinforcing bars and the masonry is less than 3/4-inch.

c. Use coarse grout in all other locations.

2. Do not place grout until entire height of masonry to be grouted has attained enough strength to resist grout pressure.

3. Comply with requirements in ACI 530.1/ASCE 6/TMS 602 for cleanouts and for grout placement, including minimum grout space and maximum pour height.

4. Limit height of vertical grout pours to not more than 60 inches.

5. Place grout in a continuous pour and agitate to eliminate voids. If masonry units are dislodged or displaced by the grouting operation, remove masonry units and relay in alignment with fresh mortar.

3.05 TOLERANCES

A. Complete masonry work within the following tolerances:

1. Face of Concrete Masonry Unit: 1/16-inch from face of adjacent unit.

2. Variation from True Plane: 1/4-inch in 10 feet and 1/2-inch maximum in 20 feet or more.

3. Variation from Plumb: 1/4-inch in each story, noncumulative and 1/2-inch maximum in two stories or more.

4. Variation from Level: 1/8-inch in 3 feet, 1/4-inch in 10 feet, and 1/2-inch maximum.

5. Variation in Wall Thickness: plus or minus 1/4-inch.

3.06 FIELD QUALITY CONTROL

A. Special Inspection and Testing of masonry construction shall be performed by the City's Testing Laboratory. The Contractor shall allow inspectors access to scaffolding and work areas as needed to perform inspections.

B. Place grout only after inspectors have verified compliance of grout spaces and grades, sizes, and locations of reinforcement.

C. Masonry Work to Receive Special Inspection: All masonry work shall receive Special Inspection in accordance with the requirements of California Building Code. Bolts installed in masonry require Special Inspection. Review Inspection protocol with City.

D. Three representative full-size sample masonry units showing full range of color, texture, finish, and dimensions are to be submitted for review.

E. Testing Frequency: One set of tests for each 5,000 sq. ft. of wall area or portion thereof.

F. Concrete Masonry Unit Test: For each type of unit provided, per ASTM C140.

G. Mortar Test (Property Specification): For each mix provided, per ASTM C780. Test mortar for mortar air content and compressive strength.

H. Grout Test (Compressive Strength): For each mix provided, per ASTM C1019.

3.07 CLEANING

A. In-Progress Cleaning: Clean unit masonry as work progresses by dry brushing to remove mortar fins and smears before tooling joints.

B. Final Cleaning: After mortar is thoroughly set and cured, clean exposed masonry as follows:

1. Test cleaning methods on sample wall panel; leave one-half of panel uncleaned for comparison purposes.

2. Protect adjacent surfaces from contact with cleaner.

3. Wet wall surfaces with water before applying cleaners; remove cleaners promptly by rinsing surfaces thoroughly with clear water.

4. Clean masonry by bucket-and-brush hand-cleaning method described in BIA Technical Notes 20.

5. Clean masonry with a proprietary acidic cleaner applied according to manufacturer's written instructions.

END OF SECTION

(THIS PAGE LEFT BLANK INTENTIONALLY)

SECTION 05300

METAL DECKING

PART 1 - GENERAL

1.01 SECTION INCLUDES

A. Furnishing and installing preformed metal deck as shown on the Plans and as specified herein.

1.02 REFERENCED SECTION

A. The following Section is referenced in this Section

1. Section 01330 – Submittals

1.03 QUALITY ASSURANCE

A. All materials shall be new and free from defects impairing strength, durability and appearance, of best commercial quality for purpose intended.

B. Steel deck and accessories shall be products of a manufacturer regularly engaged in manufacture of steel decks.

1.04 SUBMITTALS

A. Submit the following in accordance with Section 01330

1. Shop drawings showing complete details of all fabricated items.

a. Shop drawings shall show complete plan view layout of decking, location of openings, and extra members and other information necessary for the erection of the metal decking.

2. Manufacturer's installation recommendations.

1.05 PRODUCT HANDLING, STORAGE AND DELIVERY

A. Deliver materials in manufacturer's original unopened containers with labels intact and legible.

B. Store material in dry, clean and safe manner. Replace all damaged material with new material

PART 2 - PRODUCTS

2.01 METAL DECK

A. The steel roof deck units shall be fabricated from steel conforming to Section A3 of the American Iron and Steel Institute, Specifications for the Design of Cold-Formed Steel Structural Members.

B. Steel roof deck shall be galvanized, 1-5/16 inches depth with a minimum design thickness of 20 gage, and shall be designed in accordance with and comply with the standard load tables of the Roof Deck Specifications of the SDI.

C. Galvanized roof deck and accessories shall conform to the following:

1. The steel roof deck shall be manufactured from steel conforming to ASTM A653 SS Grade 80. Minimum yield strength shall be 80 ksi.

2. Galvanizing shall conform to ASTM A924 with a minimum coating class of G60 as defined in A653.

3. Sheet steel for roof deck accessories shall be manufactured from galvanized steel conforming to ASTM A653 SS Grade 33 minimum.

D. The deck manufacturer shall furnish ridge and valley plates, flat plates at change of deck direction and sump pans, as shown on plans to provide a finished surface for the application of roof insulation and roof covering.

E. Acceptable products:

1. Vercor, Verco Mfg. Co., Phoenix, AZ. Tel: (602) 272-1347.

2. Or approved equal.

PART 3 - EXECUTION

3.01 MEASUREMENTS

A. Verify all dimensions given on the Plans and make such field measurements as are necessary to lay out the work properly.

3.02 INSTALLATION OF METAL DECKING

A. Install deck panels and accessories according to SDI Specifications, SDI Manual of Construction with Steel Deck, and in accordance with the placement plans, and requirements of this section.

B. The metal deck shall be installed at right angles to the supporting members unless shown otherwise, and shall be installed according to the manufacturer's recommendations, the details shown, using the manufacturer's standard fasteners for this type of material.

C. Minimum bearing of decking on supports shall be 2 inches.

D. Meal deck shall be cut and fitted around roof openings. Sheets shall extend over two spans, where shown. End laps shall be a minimum of 2 inches and shall be staggered. Furnish and install all closure plates and accessories.

E. Steel deck shall be securely fastened to the steel supporting members with screws as shown on the Drawings. Sidelaps shall also be screwed as shown on the Drawings. Screws shall be TEK screws as manufactured by ITW Buildex, Itasca, IL. Screw size, length, and tip type shall be as shown on the Drawings. Install screws such that they tightly pull together all plies within the connection.

F. The installed roof deck panels shall be smooth, free from buckles and irregularities, and free of unnecessary openings, holes, or crevices.

G. Before placement of roof insulation and roof covering, the deck shall be inspected for tears, dents or other damage that may prevent the deck from acting as a structural roof base.

END OF SECTION

SECTION 05500

MISCELLANEOUS METAL

PART 1 - GENERAL

1.01 SECTION INCLUDES

A. Furnishing material, supplies, equipment, tools, transportation and facilities and performing labor and services necessary for, required in connection with or properly incidental to furnishing and installing miscellaneous metal, as described in this Section of the Specifications, shown on the accompanying Plans, or reasonably implied therefrom.

1.02 REFERENCED SECTIONS

A. The following Sections are referenced in this Section

1. Section 01330 – Submittals
2. Section 09900 – Coating Systems

1.03 SUBMITTALS

A. Comply with Section 01330.

B. Certified test reports: Before delivery of any miscellaneous metalwork, provide certificates which attest to material compliance with these specifications.

C. Layout or installation shop drawings for all miscellaneous metals, including but not limited to, seat angles, brackets, flashing, pipe supports.

PART 2 - PRODUCTS

2.01 MATERIALS

A. Wide Flange Beams: ASTM A992.

B. Structural Steel Shapes (other than Wide Flange Beams) and Plates: ASTM A36.

C. Structural Tubing (HSS): ASTM A500, Grade B.

D. Structural Pipe: ASTM A53, Grade B or ASTM A501.

E. Stainless Steel: ASTM A320, Type 316, as specified

F. Machine Bolts, Nuts, and Washers: ASTM A307.

G. High Strength Bolts: ASTM A325 bearing-type connections.

H. Hardened Steel Washers: ASTM F436.

I. Heavy Hex Nuts: ASTM A563.

J. Welded Headed Studs: ASTM A108.

K. Welding Materials: AWS D1.1 and D1.3; type required for materials being welded.

L. Cold-Formed Steel

1. Framing including stud and track sections, clips, light gauge angles and break shapes.

2. Material shall be supplied by a manufacturer who is a member of the Steel Stud Manufacturer's Association (SSMA) and shall be ASTM A 653 Grade 33 for 18 GA and thinner material and ASTM A 653 Grade 50 for 16 GA and thicker material.

3. Wood Construction Connectors and Fasteners: Simpson Strong-Tie Company Inc. or approved equal.

4. Self-Drilling Sheet Metal Fasteners: Tek Screws by ITW Buildex or equal.

M. Steel Bar Grating: Steel bar grating shall be as manufactured by Grating Pacific, Inc. or approved equal. Bar depth, width and spacing shall be as shown on the Plans. All grating sections shall be banded. Steel bar grating shall be hot dip galvanized.

N. Metal Strut, Fasteners and Accessories: Cooper B-Line, Unistrut or equal.

2.02 FABRICATION

A. Fabricate structural steel members in accordance with AISC Specification.

B. Conform to Chapter 22, California Building Code; 2022 Edition (CBC).

C. Welding

1. Welder qualification requirements, welding procedures, etc. according to AWS D1.1 and D1.3. Employ only certified welders.

2. Butt welds: Full penetration welds unless otherwise noted.

3. Arc welding electrodes: E70 Series.

4. All welds on hand and guardrails are to be ground smooth.

5. Tie plates: Welded as shown on the Plans.

D. Holes for bolts or rivets shall be punched or drilled 1/16-inch larger than normal bolt. Holes in column base plates may be 5/16-inch larger than anchor bolt diameter only if washers field welded to the base plate are provided under the nuts.

E. Zinc coating material: As specified in ASTM A153.

F. Zinc dust-zinc oxide coating: Conform to MILLSPEC DOD-P-20135.

G. Coating: As manufactured by Z.R.C. Chemical Products Co., Galvicon Co., or equal.

2.03 MISCELLANEOUS STEEL METALWORK

A. Other miscellaneous steel metalwork including embedded and non-embedded steel metalwork, hangers, and inserts shall be as specified on the Plans and shall be hot-dip galvanized after fabrication unless otherwise specified.

2.04 COATING REQUIREMENTS

A. Hot-dip galvanize fabricated material where specified on the Plans and in this Section of the Specifications.

B. Clean, prepare and shop prime other steel work in accordance with Section 09900.

C. Do not prime surfaces to be field welded.

D. Touch-up primer in the field after welding is complete. Apply finish coats in the field in accordance with Section 09900.

E. Coatings in contact with potable water shall be NSF-61 approved for potable water applications.

PART 3 - EXECUTION

3.01 STEEL ERECTION

A. Erect structural steel in accordance with AISC Specification.

B. Make provision for erection loads, and for sufficient temporary bracing to maintain structure safe, plumb and in true alignment until completion of erection and installation of permanent bracing.

C. Do not field cut or alter structural members without approval of Engineer.

D. After erection, prime welds, abrasions, and surfaces not shop primed, galvanized, except surfaces to be in contact with concrete. Use a primer consistent with shop coat. Use primer recommended for galvanized surfaces.

E. Bolting: Securely bolt or weld the work as erection progresses to provide for all dead load, lateral forces and erection stresses.

3.02 MISCELLANEOUS METALWORK

A. General

1. Fieldwork shall not be permitted on galvanized items. Drilling of bolts or enlargement of holes to correct misalignment will not be allowed.

2. Protect dissimilar metals from galvanic corrosion by means of pressure tapes, coatings or isolators. Protect aluminum in contact with concrete or grout with a heavy coat of bituminous paint.

3. Metalwork to be embedded in concrete:

a. Placed accurately and held in correct position while the concrete is placed or, if specified, recesses or blockouts shall be formed in the concrete.

b. The surfaces of metalwork in contact with or embedded in concrete shall be thoroughly cleaned.

c. If accepted, recesses may be neatly cored in the concrete after it has attained its design strength and the metalwork grouted in place.

B. Seat Angles, Supports, and Guides

1. Set seat angles for grating and supports for floor plates so that they are flush with the floor and also maintain the grating and floor plates flush with the floor.

C. Fabrication

1. Holes shall be punched 1/6-inch larger than the nominal size of the bolts, unless otherwise specified. Whenever needed, because of the thickness of the metal, holes shall be subpunched and reamed or shall be drilled.

2. Fabrication including cutting, drilling, punching, threading and tapping required for miscellaneous metal or adjacent work shall be performed prior to hot-dip galvanizing.

3.03 FABRICATIONS REQUIREMENTS

A. Steel members, fabrications and assemblies: Galvanized after fabrication in accordance with ASTM A123.

B. Steel items weighing 100 pounds or less: Hot-dip zinc coated.

C. Anchor bolts and nuts 5/8 inch and larger: Hot-dip zinc coated in accordance with ASTM A153.

D. Anchor bolts and nuts smaller than 5/8-inch and all other bolts, screws, nuts, washers and other minor steel fasteners: Mechanically zinc coated.

E. Fabrication practices for products to be galvanized: In accordance with applicable portions of ASTM A143, A384 and A385.

3.04 REPAIR OF DEFECTIVE GALVANIZED COATING

A. Where zinc coating has been damaged after installation, substrate surface shall be first cleaned and then repaired with zinc dust-zinc oxide coating in accordance with ASTM A780. Application shall be as recommended by the zinc dust-zinc oxide coating manufacturer. Coating shall consist of multiple coats to dry film thickness of eight mils.

B. Remove items not physically damaged, but which have insufficient or deteriorating zinc coatings, and items damaged in shipment or prior to installation from the project site for repair by the hot-dip zinc coating method.

3.05 CLEANING

A. After installation, damaged surfaces of shop primed metals shall be cleaned and touched up with the same material used for the shop coat.

END OF SECTION

SECTION 05501

ANCHOR BOLTS

PART 1 - GENERAL

1.01 SECTION INCLUDES

A. Anchor bolts complete with washers and nuts. Type 316 stainless steel, unless otherwise specified.

1.02 REFERENCED SECTIONS

A. The following Sections are referenced in this Section

1. Section 01330 – Submittals
2. Section 03301 – Cast-In-Place Concrete
3. Section 11002 – Equipment Mounting

1.03 SUBMITTALS

A. Comply with Section 01330 and include the following information:

1. Data indicating load capacities.
2. Chemical resistance.
3. Temperature limitations.
4. Installation instructions.
5. Evaluation Report for expansion type anchors as specified in Paragraph 3.04.
6. Design calculations in accordance with Paragraph 2.03.
7. Manufacturer's data and catalog numbers.

PART 2 - PRODUCTS

2.01 GENERAL

A. Anchor bolt holes in equipment support frames shall not exceed the bolt diameters by more than 25 percent up to a limiting maximum oversizing of 1/8-inch. Minimum anchor bolt diameter shall be 1/2-inch. Anchor bolts for equipment mounting shall be provided as specified in Section 11002.

B. Tapered washers shall be provided where mating surface is not square with the nut.

C. Expansion or adhesive anchors set in holes drilled in the concrete after the concrete is placed will not be permitted in substitution for anchor bolts except where otherwise specified. Upset threads shall not be acceptable.

2.02 MATERIALS

A. Anchor bolt materials: as specified below unless otherwise specified.

B. All equipment anchor bolts and anchor bolts that are submerged or above the water surface shall be Type 316 stainless steel.

Material	Specification
Carbon steel bolts:	
Structures	ASTM A307, Grade A, hot-dip galvanized
Equipment	ASTM A449, Type 1, hot-dip galvanized
Stainless steel bolts, nuts, washers	ASTM A320 Type 316
Expansion anchors (concrete)	Simpson Strong-Bolt 2, Hilti Kwik Bolt TZ2, or equal
Expansion anchors (masonry)	Simpson Strong-Bolt 2, Hilti Kwik Bolt TZ2, or equal
Adhesive anchors (concrete)	Simpson SET-3G, Hilti HIT-HY 200 V3, or equal
Adhesive anchors (masonry)	Simpson SET-3G, Hilti HIT-HY 270, or equal

2.03 DESIGN

A. Design anchor bolts for equipment frames and foundations in accordance with the CBC for Seismic Design Category D and Site Class E.

1. This force shall be considered acting at the center of gravity of the piece under consideration.

2. A basic wind speed of 100 miles per hour, Exposure Category C, shall be used if applicable.

B. Submit calculations and shop drawings with the equipment submittal in accordance with Paragraph 1.03 and Section 01330 for all anchorage details.

1. All calculations shall be prepared and signed by a civil or structural engineer currently registered in the State of California.

PART 3 - EXECUTION

3.01 GENERAL

A. Fieldwork, including cutting and threading, shall not be permitted on galvanized items.

B. Dissimilar metals shall be protected from galvanic corrosion by means of pressure tapes, coatings or isolators.

C. All stainless steel anchor bolts and fasteners shall be assembled with a stainless steel anti-seize compound such as molycote.

3.02 CAST-IN-PLACE ANCHOR BOLTS

A. Anchor bolts to be embedded in concrete and concrete unit masonry shall be placed accurately and held in correct position while the concrete or grout is placed or, if specified, recesses or blockouts shall be formed in the concrete and the metalwork shall be grouted in place in accordance with Section 03301.

B. The surfaces of metalwork in contact with concrete shall be thoroughly cleaned.

3.03 ADHESIVE ANCHOR BOLTS

A. Use shall be limited to locations where exposure, on an intermittent or continuous basis, to acid concentrations higher than ten percent, to chlorine gas, or to machine or diesel oils, is extremely unlikely.

B. Use shall be limited to applications where exposure to fire or exposure to concrete or rod temperature above 120 degrees F is extremely unlikely. Overhead applications (such as pipe supports) because of the above concerns, shall be disallowed.

C. Approval from Engineer for specific application and from supplier of equipment to be anchored, if applicable.

D. Anchor diameter and grade of steel shall be per contract documents or per equipment supplier specifications. Anchor shall be threaded or deformed full length of embedment and shall be free of rust, scale, grease, and oils.

E. Embedment depth shall be as specified on the Drawings.

F. All installation recommendations by the anchor system manufacturer shall be followed carefully, including maximum hole diameter.

G. Holes shall have rough surfaces, such as can be achieved using a rotary percussion drill.

H. Holes shall be blown clean with compressed air and be free of dust or standing water prior to installation.

I. Anchor shall be left undisturbed and unloaded for full adhesive curing period.

J. Concrete temperature (not air temperature) shall be compatible with curing requirements of adhesives per adhesive manufacturer. Anchors shall not be placed in concrete below 25ºF.

3.04 EXPANSION ANCHORS

A. Use of expansion type anchors shall be subject to Conditions B-C and F-H specified in Paragraph 3.03 and approval by the Engineer.

B. The Contractor shall supply the Engineer with the current evaluation report from the International Code Council – Evaluation Service for the particular brand of expansion anchors to be used.

END OF SECTION

(THIS PAGE LEFT BLANK INTENTIONALLY)

SECTION 05550

PREFABRICATED METAL ROOF TRUSSES

PART 1 - GENERAL

1.01 SECTION INCLUDES

A. Prefabricated metal roof trusses.

B. Cold-formed steel framing accessories.

1.02 REFERENCED SECTIONS

A. The following Section is referenced in this Section

1. Section 01330 – Submittals

1.03 DEFINITIONS

A. Truss Component Manufacturer: The maker of the components that will be assembled into trusses by the Truss Fabricator. See MANUFACTURERS for acceptable Truss Component Manufacturer.

B. Truss Fabricator: The manufacturer who assembles the Truss Component Manufacturer's components into completed trusses. See MANUFACTURERS for acceptable Truss Fabricators.

C. Truss Designer: The design professional, individual or organization, having responsibility for the design of the trusses. In this case, the Truss Designer is the Truss Component Manufacturer.

1.04 DESIGN, MANUFACTURE, AND INSTALLATION STANDARDS AND SPECIFICATIONS

A. AISI S100-07/S2-10: North American Specification for the Design of Cold-Formed Steel Structural Members, with Supplement No. 2; American Iron and Steel Institute; 2007 Edition.

B. AISIS200-07: North American Standard for Cold-Formed Steel Framing - General Provisions; 2007 Edition.

C. AISI S214-07: North American Standard for Cold-Formed Steel Framing - Truss Design, with Supplement No. 2; 2007 Edition.

D. AISI S202-11: Code of Standard Practice for Cold-Formed Steel Structural Framing; 2011.

E. ASTM A 370-14 - Standard Test Methods and Definitions for Mechanical Testing of Steel Products; 2014.

F. ASTM A 500-13 - Standard Specification for Cold-Formed Welded and Seamless Carbon Steel Structural Tubing in Rounds and Shapes; 2013.

G. ASTM A 653-13 - Standard Specification for Steel Sheet, Zinc-Coated (Galvanized) or Zinc-Iron Alloy-Coated (Galvannealed) by the Hot-Dip Process; 2013.

H. LGSEA - Field Installation Guide for Cold-Formed Steel Roof Trusses; Light Gauge Steel Engineers Association; October 1999.

I. LGSEA Technical Note 551d - Design Guide for Construction Bracing of Cold-Formed Steel Trusses; Light Gauge Steel Engineers Association; February 1997.

J. LGSEA Technical Note 551e - Design Guide for Permanent Bracing of Cold-Formed Steel Trusses; Light Gauge Steel Engineers Association; February 1998.

1.05 SUBMITTALS

A. Submittals shall be in accordance with Section 01330.

B. Product Data: Truss Component Manufacturer's descriptive literature for each item of cold-formed metal framing and each accessory specified in this section.

C. Shop Drawings: Detailed drawings prepared by the Truss Designer and stamped and signed by a Professional Civil Engineer registered in the State of California that:

1. Indicate special components and installations not fully detailed in product data.

2. Indicate in the layout placement drawings the number, types, location, and spacing of trusses and other framing members.

3. Indicate details of truss loading, reactions, uplifts, support locations, material sizes and gauges, permanent truss web bracing, and splices as required for a complete installation.

D. Design Calculations

1. Results of the design analysis by the Truss Designer.

2. Calculations for all truss members and connections shall be performed given the loads stated in this specification section and on the Drawings.

3. Calculations shall show all resulting stresses and deflections and compare them with the corresponding allowable stresses and deflection limits.

4. Design calculations shall be stamped and signed by a Professional Civil Engineer registered in the State of California.

E. Installation Instructions: Truss Component Manufacturer's printed instructions for handling, storage, and installation of each item of cold-formed metal framing and each accessory specified in this section.

1.06 QUALITY ASSURANCE

A. Pre-Installation Meeting: Meet at the job site prior to the scheduled beginning of installation to review requirements:

1. Attendees: Require attendance by representatives of the following:

a. Truss Fabricator, if requested by installer.

b. Installer of this section.

c. Other entities directly affecting, or affected by, construction activities of this section, including but not limited to, the following:

1) Installer of truss support framing.

2) Installer of corrugated metal deck.

3) Installer of mechanical, electrical, and plumbing systems.

2. Review potential interface conflicts; coordinate layout and support provisions.

1.07 DELIVERY, STORAGE, AND HANDLING

A. Pack, ship, handle, unload, and lift shop products in accordance with Truss Component Manufacturer's recommendations and in manner necessary to prevent damage or distortion.

B. Store and protect products in accordance with Truss Component Manufacturer's recommendations and in manner necessary to prevent damage, distortion and moisture buildup.

PART 2 - PRODUCTS

2.01 MANUFACTURERS

A. Acceptable Truss Component Manufacturer: Alpine TrusSteel Products from ITW Company, Inc., 6750 Forum Drive, Suite 305, Orlando, FL 32821. Tel: (888) 565-9181. www.trussteel.com.

B. Acceptable Truss Fabricators: Truss components shall be fabricated into completed trusses by one of the following fabricators:

1. Steel Truss & Supply, 22533 Bridlewood Lane, Palo Cedro, CA 96073. Tel: (530) 365-3700. www.steeltrusssupply.com.

2. Gecko Steel Truss, LLC, 699 West 17th Street, Yuma, AZ 85364. Tel: (928) 726-8748. www.geckosteeltruss.net.

C. Requests for substitutions will be considered in accordance with the following:

1. All substitutions must be approved in writing by the Engineer-of-Record.

2. All applications for substitution must include samples and technical data.

2.02 COMPONENTS

A. Prefabricated Cold-Formed Steel Trusses: Alpine TrusSteel truss component system by ITW Company, Inc. providing a complete horizontal framing system, ready for deck installation, meeting specified requirements.

1. Truss type, spacing, span, and height: As indicated on the Drawings.

2. Comply with requirements of Paragraph 1.04 and the 2022 California Building Code.

3. Design loads: As indicated on the Drawings.

4. Deflection under live loads: 1/360th of span, maximum.

5. Deflection under total load: 1/240th of span, maximum.

6. Shop fabricate in accordance with shop drawings, using jigging systems to ensure consistent component placement and alignment of components, and to maintain specified tolerances. Field fabrication is strictly prohibited unless performed by authorized Truss Fabricator using Truss Fabricator's shop assemblers and proper jigging systems.

7. Shop fabrication of other cold-formed steel framing components into assemblies prior to erection is permitted. Fabricate assemblies in accordance with shop drawings.

8. Fasten connections within truss assembly with Truss Component Manufacturer's screws only and as shown on the shop drawings. Welding and other fasteners are prohibited.

9. Fabricate straight, level, and true, without rack, and to the following tolerances:

   a. Trusses up to 30 feet long: Maximum 1/2 inch variation from design length.

   b. Trusses over 30 feet long: Maximum 3/4 inch variation from design length.

   c. Trusses up to 5 feet high: Maximum 1/4 inch variation from design height.

   d. Trusses over 5 feet high: Maximum 1/2 inch variation from design height.

B. Truss Chord and Web Components: Alpine TrusSteel components, with rolled or closed edges to minimize the danger of cutting during handling; chord and web components without rolled edges are prohibited.

1. Shapes, Sizes, and Thicknesses: As required to suit design and as indicated on shop drawings.

2. Chords: Cold-formed from ASTM A 653/A 653M galvanized steel sheet, minimum G60 coating; minimum yield strength of 55,000 psi for 22, 20, 18 and 16 GA components or 50,000 psi for 14 GA and 12 GA components. Top chord shall be 16 GA minimum.

   a. Nominal 28 mil (22 GA) members:

      1) Minimum bare metal thickness: 0.0284 inch.

      2) Maximum design thickness: 0.0299 inch.

   b. Nominal 33 mil (20 GA) members:

      1) Minimum bare metal thickness: 0.0329 inch.

      2) Maximum design thickness: 0.0346 inch.

   c. Nominal 43 mil (18 GA) members:

      1) Minimum bare metal thickness: 0.0428 inch.

      2) Maximum design thickness: 0.0451 inch.

   d. Nominal 54 mil (16 GA) members:

      1) Minimum bare metal thickness: 0.0538 inch.

      2) Maximum design thickness: 0.0566 inch.

   e. Nominal 68 mil (14 GA) members:

      1) Minimum bare metal thickness: 0.0677 inch.

      2) Maximum design thickness: 0.0713 inch.

   f. Nominal 97 mil (12 GA) members:

      1) Minimum bare metal thickness: 0.0966 inch.

      2) Maximum design thickness: 0.1017 inch.

3. Webs: Cold-formed ASTM A500 steel structural tubing; minimum yield strength of 45,000 psi.

a. Nominal 33 mil (20 GA) members:

1) Minimum bare metal thickness: 0.033 inch.

2) Maximum design thickness: 0.035 inch.

b. Nominal 47 mil (18 GA) members:

1) Minimum bare metal thickness: 0.047 inch.

2) Maximum design thickness: 0.049 inch.

c. Nominal 63 mil (16 GA) members:

1) Minimum bare metal thickness: 0.063 inch.

2) Maximum design thickness: 0.065 inch.

C. Fasteners Used in Fabricating Trusses: Fasteners as recommended by Truss Component Manufacturer, bearing stamp of Truss Component Manufacturer for ready identification.

PART 3 - EXECUTION

3.01 EXAMINATION

A. Verify that all utilities that will penetrate the plane of the trusses are accounted for in the design of the trusses and will not conflict with truss, bracing, or bridging members.

B. Verify that bearing surfaces and substrates are ready to receive steel trusses.

C. Verify that truss bearing surfaces are within the following tolerances:

1. Variation from Level or Specified Plane: Maximum 1/8 inch in 10 feet.

2. Variation from Specified Position: Maximum 1/4 inch.

D. Inspect conditions under which installation is to be performed and submit written notification if such conditions are unacceptable to installer.

1. Notify Engineer-of-Record within 24 hours of inspection.

2. Beginning construction activities of this section before shop drawings have been approved or unacceptable conditions have been corrected is prohibited.

3. Beginning construction activities of this section indicates installer's acceptance of conditions.

3.02 INSTALLATION

A. Install trusses in accordance with Truss Component Manufacturer's instructions and Truss Fabricator's shop drawings. Use correct fasteners as previously described.

B. Place components at spacings indicated on the shop drawings.

C. Install all erection (temporary installation) bracing and permanent bracing and bridging before application of any loads; follow recommendations of LGSEA *Field Installation Guide for Cold-Formed Steel Roof Trusses*.

D. Install erection bracing - follow recommendations of LGSEA *Field Installation Guide for Cold-Formed Steel Roof Trusses*.

1. Provide bracing that holds trusses straight and plumb and in safe condition until decking and permanent truss bracing has been fastened to form a structurally sound framing system.

2. All sub-contractors shall employ proper construction procedures to insure adequate distribution of temporary construction loads so that the carrying capacity of any single truss or group of trusses is not exceeded.

E. Install permanent bracing and bridging as shown in the Engineer-of-Record's drawings and notes and as shown in the Truss Fabricator's shop drawings.

F. Removal, cutting, or alteration of any truss chord, web or bracing member in the field is prohibited, unless approved in advance in writing by the Engineer-of-Record and the Truss Designer.

G. Repair or replace damaged chords, webs, and complete trusses as directed and approved in writing in advance by the Engineer-of-Record and the Truss Component Manufacturer.

END OF SECTION

SECTION 06200

FINISH CARPENTRY

PART 1 - GENERAL

1.01 SECTION INCLUDES

A. Furnishing all material, supplies, equipment, tools, transportation and facilities and performing all labor and services necessary for, required in connection with or properly incidental to furnishing and installing finish carpentry, as described in this section of the specifications, shown on the accompanying drawings, or reasonably implied therefrom.

B. Work Included

1. Furnishing and installing miscellaneous wood trim.

1.02 REFERENCED SECTION

A. The following Section is included in this Section

1. Section 09900 – Coating Systems

1.03 QUALITY ASSURANCE

A. Codes and Standards

1. Comply with all Federal, State and Local Codes and Safety Regulations. In addition, comply with the provisions of the following codes, specifications, and standards, except where more stringent requirements are shown or specified:

a. California Building Code, 2022 Edition (CBC).

b. National Forest Products Association, “National Design Specification for Wood Construction”, 2015 Edition.

c. American Plywood Association, “U.S. Product Standard PS 1”.

d. All plywood shall be identified as to species, grade, and glue type and shall bear the identification grade mark of the American Plywood Association.

1.04 DELIVERY STORAGE AND HANDLING

A. Deliver and store lumber on sleepers and cover for protection. See general conditions for additional delivery and storage requirements.

PART 2 - PRODUCTS

2.01 MATERIALS

A. Quality Standard: Comply with WIC “Manual of Millwork”, Section 6.

B. Lumber Species: B & Better Grade Cedar, smooth finish for paint finish as specified in Section 09900.

C. Wood Moisture Content: Comply with requirements of referenced quality standard for moisture content of lumber in relation to relative humidity conditions existing during time of fabrication and in installation areas.

D. Cedar plywood shall conform to U.S. Product Standard PS 1−09, American Plywood Association. Each sheet shall be stamped with the PS and/or APA grade mark. Cedar plywood shall be five−ply exterior type, Group Identification Index 32/16, Species Group 2 or better.

E. Nails: hot−dip galvanized or stainless steel.

PART 3 - EXECUTION

3.01 GENERAL REQUIREMENTS

A. Center joints of plywood accurately over supports and nail into solid wood. Protect all plywood from moisture by use of all required waterproof covering until the plywood has in turn been covered by the next succeeding component or finish.

B. Remove lumber not grade stamped, and lumber of improper grade, from the job site, and immediately replace with grade stamped lumber of the proper grade.

C. All other lumber materials, not specifically described but required for the proper completion of the work, shall be new, first quality of their respective kinds and subject to the approval of the Engineer.

D. All carpentry shall produce joints true, tight, and well nailed with all members assembled in accordance with the Drawings and with all pertinent regulations. Fabricate woodwork to dimensions, profiles, and details indicated. Ease edges in accordance with WIC standards.

END OF SECTION

SECTION 07210

THERMAL INSULATION

PART 1 - GENERAL

1.01 SECTION INCLUDES

A. Thermal building insulation.

1.02 REFERENCED SECTION

A. The following Section is referenced in this Section

1. Section 01330 – Submittals

1.03 SUBMITTALS

A. Comply with Section 01330.

B. Provide manufacturer's complete product data sheets.

PART 2 - PRODUCTS

2.01 THERMAL BUILDING INSULATION

A. Thermal building insulation shall be flame-resistant, formaldehyde-free thermal and acoustical fiber glass batt insulation as manufactured by Johns Manville, Owens Corning, or approved equal.

B. Thermal resistance "R" value of the insulation shall be R19.

C. The insulation shall be faced and shall have an FHC (Fire Hazard Classification) rating of 25/50 or less.

D. Insulation stops shall be fabricated from galvanized sheet metal.

PART 3 - EXECUTION

3.01 INSTALLATION

A. Thermal Building Insulation

1. Install thermal building insulation in accordance with the manufacturer's recommendations.

2. Insulation shall be installed with the facing toward the interior of the building.

3. Insulation shall be installed snugly against adjacent pieces and against all obstructions.

4. Cutting and fitting shall be performed as required to leave no voids.

5. Install insulation stops at locations shown on the Drawings.

END OF SECTION

(THIS PAGE LEFT BLANK INTENTIONALLY)

SECTION 07260

VAPOR RETARDERS

PART 1 - GENERAL

1.01 SECTION INCLUDES

A. Vapor barrier.

1.02 REFERENCED SECTION

A. The following Section is referenced in this Section

1. Section 01330 – Submittals

1.03 SUBMITTALS

A. Comply with Section 01330.

B. Provide manufacturer's complete product data sheets.

PART 2 - PRODUCTS

2.01 VAPOR BARRIER

A. Multilayer plastic membrane for moisture proofing underlay shall be polyethylene film with a thickness of 15 mils.

B. Pressure sensitive tape shall be 2-inch wide polyethylene tape.

C. Manufacturers: One of the following or equal:

1. StegoWrap, Stego Industries.

2. Premoulded Membrane Vapor Seal with Plasmatic Corel, W. R. Meadows.

PART 3 - EXECUTION

3.01 INSTALLATION

A. Vapor Barrier

1. Unless otherwise specified, moisture proofing underlay shall be provided under concrete floors or floating slabs-on-grade including those deposited on drain rock.

a. Backfilled surfaces to receive moisture proofing underlay shall be leveled off and smoothed over to minimize contact with sharp edges.

2. At joints, moisture proofing member shall be lapped 6 inches and sealed with pressure sensitive tape.

a. Where pipes and conduits pass through the membrane, they shall be wrapped tightly with separate sheets of membrane which shall then be sealed with tape to the main membrane.

b. Support reinforcing steel or wire mesh by chairs with flat bases to protect the membrane.

END OF SECTION

(THIS PAGE LEFT BLANK INTENTIONALLY)

SECTION 07411

METAL ROOFING PANELS

PART 1 - GENERAL

1.01 SECTION INCLUDES

A. Engineered metal roof: prefinished standing seam metal roofing, flashing and soffits.

B. Clips, angles, corners, fasteners, anchors, purlins, beams, and all necessary accessories for a complete watertight system.

C. Installation.

1.02 REFERENCED SECTION

A. The following Section is referenced in this Section

1. Section 01330 – Submittals

1.03 SUBMITTALS

A. Submit for approval in accordance with Section 01330.

B. Manufacturer's Data

1. Panel sheet steel
2. Sheet steel corners, angles, and closure strips
3. Sheet steel coatings
4. Fastener clips, screws, and pop rivets
5. Sealant
6. Installation instructions
7. UL 580 conformance
8. Colors to be selected by the City after submittal.

C. Shop Drawings: Produced by the roofing manufacturer based on the Drawings clearly showing the design, dimensions, materials, methods of construction, details and installation of each piece to be installed.

D. Samples: Submit a 2" x 3" sample of metal roof and soffit.

E. Warranty

1. Submit manufacturer's warranty for 20 years covering paint finish, chipping, and fading.
2. After completion submit a warranty stating that the roofing system and metal flashings will properly shed water and protect the building from rain damage for a period of two years.

PART 2 - PRODUCTS

2.01 ACCEPTABLE MANUFACTURERS

A. Structural sheet steel shall be manufactured by AEP Span, 10905 Beech Avenue, Fontana, CA; or approved equal.

2.02 SHEET METAL ROOF AND SOFFIT

A. Sheet metal roof shall be Design Span hp Metal Roofing by AEP Span or approved equal. Panels shall be 16" wide with added wide batten cap.

B. Panels shall be 22 gauge zinc-aluminum coated steel and conform to ASTM A792.

C. Panels shall be shop pre-coated with DuraTech 5000 coating of selected color, with factory installed sealant.

D. City to select color from manufacturer's list of at least 22 standard colors.

E. Install panels per manufacturer's recommendations.

F. Roof system shall conform to UL580 for uplift class 90.

G. Sheet Metal Soffit

1. Sheet metal soffit shall be Flush Panel Metal Wall Panels by AEP Span or approved equal. Panels shall be 12" wide.

2. Panels shall be 22 gauge zinc-aluminum coated steel and conform to ASTM A792.

3. Panels shall be vented to provide 7.8% open area (11.3 in^2/ft^2 panel).

4. Panels shall be shop pre-coated with DuraTech 5000 coating of selected color.

5. City to select color from manufacturer's list of at least 22 standard colors.

6. Install panels per manufacturer's recommendations.

2.03 FASTENERS

A. Clips shall be by the same manufacturer as the panels. Screws for attachment of clips to metal decking shall be zinc plated, Phillips drive screws with pancake head, size as recommended by roofing manufacturer (minimum #10 x 1" long).

B. Screws for connection of components of the roofing system shall be 316 stainless steel, type S-12, self-drilling, self-tapping screws.

C. Install fasteners per installer's location schedule.

2.04 ACCESSORY MATERIAL

A. Cleats, corners, angles, closure, and starter strips shall be of same material as sheet furnished by the panel manufacturer.

2.05 FLASHING

A. Panel penetration flashing: As recommended by Panel Manufacturer to satisfy conditions of use.

B. Other Flashing: Material and finish to match panels. Lead or copper will not be allowed.

2.06 SEALANTS

A. Gunnable Grade Caulking: Single component polyurethane caulk.

B. Tape Sealant: Butyl.

PART 3 - EXECUTION

3.01 STORAGE AND HANDLING

A. Store metal roofing out of weather in a clean and dry location.

B. Stack preformed and prefinished material to prevent twisting, bending, or abrasion, and to provide ventilation.

C. Prevent contact with materials and metals during storage which may cause discoloration or staining.

3.02 SHOP DRAWINGS

A. Take field measurements for the preparation of shop drawings.

B. Install panels full length and width with no horizontal joints.

C. Submit and obtain approval of shop drawings before panel fabrication.

3.03 INSTALLATION

A. Execute metal work in accordance with the Sheet Metal and Air Conditioning Contractor's National Association (SMACNA) standards and manufacturer's instructions.

B. Lap, lock, cleat, seam, and seal all joints. Use rubber asphalt bedding compound for joints between metal and bitumen or metal and felts.

C. Install starter and edge strips, and cleats before starting installation of roofing sheets.

D. Do not install panels or trim in contact with dissimilar materials.

E. Do not allow foot traffic on the completed roof.

3.04 FASTENERS AND SEALANTS

A. Install panel fastener clips on 18" centers and within 6" from the ends. Install other fasteners as recommended by the panel manufacturer.

B. Install flashing and panels to avoid all contact between dissimilar metals. Install sealant as shown on the Drawings and as recommended by the panel manufacturer.

3.05 CLEAN-UP AND CLOSE-OUT

A. Touch-up damaged paint surfaces with an air dry touch-up paint provided by the manufacturer. Small brush application only.

B. Cleaning and Repairing

1. At the completion of each day's work and at completion of work, sweep panels, flashing, downspouts, and gutters clean.

2. Do not allow fasteners, cuttings, fillings, or scraps to accumulate.

3. Remove all debris from project.

END OF SECTION

SECTION 07600

FLASHING AND SHEET METAL

PART 1 - GENERAL

1.01 SECTION INCLUDES

A. Installation of sheet metal flashing and gutters.

B. General Notes on the Drawings are part of these Specifications.

1.02 REFERENCED SECTION

A. The following Section is referenced in this Section

1. Section 07900 – Sealants and Caulking

1.03 STORAGE AND HANDLING

A. Store galvanized metal under dry conditions in such a manner as to prevent twisting, bending, or abrasion, and to provide ventilation.

PART 2 - PRODUCTS

2.01 SHEET MATERIALS

A. Flashing: Zinc-aluminum coated steel; 24 gauge core steel, with AZ-50 coating per ASTM A924/A792.

B. Gutters: 20 gauge zinc-aluminum coated steel conforming to ASTM A924/A792. Gutters shall be shop pre-coated with Kynar 500 coating of selected color. Color and style to be selected by the City from manufacturer's list of standard colors and styles.

2.02 ACCESSORIES

A. Fasteners: Same material and finish as flashing metal.

B. Sealant: Butyl type, specified in Section 07900.

C. Reglets: Surface mounted zinc-aluminum coated steel.

D. Cleats and Stiffeners: As required to make all sections rigid.

2.03 FABRICATION

A. Form components true to shape, accurate in size, square, and free from distortion or defects. Form pieces in longest practical lengths.

B. Hem exposed edges on underside 1/2"; miter and seam corners. Fabricate vertical faces with bottom edge formed outward 1/4" and hemmed to form drip.

PART 3 - EXECUTION

3.01 EXAMINATION AND PREPARATION

A. Verify roof openings, curbs, or vents through roof are solidly set, reglets in place, and nailing strips located.

B. Verify base flashing is in place, sealed, and secure.

3.02 INSTALLATION

A. Perform work in accordance with the following:

1. 2022 CBC and local building code requirements.

2. NRCA (National Roofing Contractors Association) - Roofing Manual.

3. SMACNA (Sheet Metal and Air Conditioning Contractors National Association) - Architectural Sheet Metal Manual.

B. Install starter and edge strips, and cleats.

C. Fit components tight in place. Make corners square, surfaces true and straight in planes, and lines accurate to profiles.

D. Seal metal joints watertight.

E. Attach gutters per manufacturer's recommendations.

END OF SECTION

SECTION 07900

SEALANTS AND CAULKING

PART 1 - GENERAL

1.01 SECTION INCLUDES

A. Furnishing and installing sealants and caulking as shown and as specified.

B. At Contractor's option, provide the sealant and caulking work by own forces, by a specialty contractor, or by the subcontractors for the various parts of the work who normally provide their own sealants and caulking, or by any combination of the above choices.

1.02 REFERENCED SECTION

A. The following Section is referenced in this Section

1. Section 01330 – Submittals

1.03 SUBMITTALS

A. Comply with Section 01330.

B. Manufacturer's Data

1. Manufacturer's specifications, recommendations, and installation instructions for each type of sealant, caulking and associated miscellaneous material required.

2. Include manufacturer's published data, letter of certification, or certified laboratory test report, indicating that each material complies with the requirements of the Contract Documents, and is intended for the uses and applications shown and/or specified.

PART 2 - PRODUCTS

2.01 MATERIALS

A. Acceptable Manufacturers

1. Polyurethane Sealants: Mameco International; Sika Chemical Corp.; Sonneborn-Contech; Tremco, Inc. (Dymeric); and Pecora (Dynatrol I or Dynatrol II).

2. Silicone Sealants: General Electric Co.; Dow Corning Corp.; and Pecora.

3. Compressible Sealant: Sandell Manufacturing Company, Inc.

B. Sealants—General

1. Provide colors matching materials being sealed. Where compound is not exposed to view in finished work, provide manufacturer's color which has best performance.

2. Provide non-sagging sealant for vertical joints.

3. Sealants for horizontal joints may be self-leveling.

4. Before use of any sealant, investigate its compatibility with joint surfaces, fillers and other materials in joint system. Use only compatible materials.

5. Obtain sealing compounds from manufacturers who will provide manufacturers' field service representatives at project site for purpose of advising and instructing installers in proper procedures. Provide such services, at no expense to the City.

6. All Areas:

   a. Polyurethane, or

   b. Silicone.

7. Use compressible sealant where indicated.

8. Sealant materials shall be commercial grade products.

C. Sealant, Polyurethane: One or two component.

D. Sealant, Silicone: One or two component.

E. Joint Cleaner: As recommended by sealant manufacturer.

F. Primer-Sealer: As recommended by sealant manufacturer.

G. Bond Breaker: As recommended by sealant manufacturer.

H. Sealant Backer Rod: Rod stock of polyethylene, polyethylene jacketed polyurethane foam, or other flexible, non-absorbent, non-bituminous material recommended by sealant manufacturer to:

1. Control joint depth.

2. Break bond of sealant at bottom of joint.

3. Provide proper shape of sealant bead.

I. Sealant, Compressible

1. Size so that width of material is twice joint width.

2. Foamed polyurethane strip saturated with polymerized polybutylene waterproofing on front face with non-reactive release agent that will act as bond breaker for applied sealant: Polytite-B.

J. Adhesive, compressible sealant: Sandell No. 14.

PART 3 - EXECUTION

3.01 PREPARATION

A. Installer shall inspect the work to which sealants and/or caulking is to be applied and notify the Contractor in writing, with copy to the Engineer, of all conditions detrimental to the timely completion of the work.

B. Do not proceed with the work of this Section until all unsatisfactory conditions have been corrected in a manner acceptable to the manufacturer of the materials.

3.02 INSTALLATION

A. Seal building and any joints or areas which will permit penetration of moisture or access by insects or other pests. Make all joints water and airtight.

B. Where required, prime joint surfaces. Limit application to surfaces to receive caulking. Mask off adjacent surfaces.

C. Make depth of sealing compounds not more than ½ width of joint, but in no case less than 1/4-inch (6 mm).

1. Sub-caulk joints that are deep, or joints without suitable backstop, to proper depth.

2. Protect side walls of joint (to depth of caulking) with Sandell No. 3 tape.

3. Install with adhesive on 2 faces in contact with sides of joints.

D. If joint is too shallow for use of backer rod, apply bond breaker to back of joint as recommended by sealant manufacturer. If bond breaker is used, apply it carefully to avoid prevention of sealant bond to sides of joints.

E. Use guns where possible to insure penetration and density. Finish joint densely and completely filled, producing a smooth surface.

F. In all rooms, seal all penetrations and recessed items through the floors, walls and ceilings with concealed silicone sealant. This includes such items as electrical device cover plates, pipes, fire extinguisher cabinets, etc.

3.03 PROTECTION AND CLEANING

A. Areas adjacent to joints to be sealed shall be protected against smearing.

B. Paper masking tape may be used if removed within ten minutes after the joint has been filled with sealant.

C. Fresh compound that has been smeared on adjacent surfaces shall be immediately wiped off the surface with a clean rag, and all residue removed using methyl ethyl ketone, toluene, or other similar material, taking care not to damage the finish coating of the material being cleaned.

END OF SECTION

(THIS PAGE LEFT BLANK INTENTIONALLY)

SECTION 07910

PREFORMED JOINT FILLERS

PART 1 - GENERAL

1.01 SECTION INCLUDES

A. Preformed joint fillers.

1.02 REFERENCED SECTIONS

A. The following Sections are referenced in this Section

1. Section 01330 – Submittals
2. Section 07900 – Sealants and Caulking

1.03 SUBMITTALS

A. Comply with Section 01330 and include the following information:

1. Complete product information.
2. The manufacturer's recommendations for handling and installation of the material.

PART 2 - PRODUCTS

2.01 PREFORMED ASPHALT FIBERBOARD

A. Preformed asphalt fiberboard joint filler in accordance with ASTM D994, 1/2 inch thick, unless otherwise specified.

2.02 PREFORMED RESIN-BONDED CORK

A. Preformed resin-bonded cork joint filler shall be in accordance with ASTM D1752, Type II.

B. Cork joint filler thickness shall match the specified joint width.

PART 3 - EXECUTION

3.01 GENERAL

A. Place preformed joint fillers into position before the concrete is poured.

B. Where it is necessary for the filler to be fixed to existing concrete or other building materials, use a suitable adhesive recommended by the filler manufacturer.

C. Filler surfaces shall be clean and dry prior to the placement of the concrete.

3.02 PREFORMED ASPHALT FIBERBOARD

A. Preformed asphalt fiberboard joint fillers shall be used for expansion joints in concrete sidewalks, curbs, and roadways.

3.03 PREFORMED RESIN-BONDED CORK

A. Preformed resin-bonded cork joint filler shall be used for expansion joints in concrete structures.

B. Seal the expansion joint with backer rod and sealant as specified in Section 07900.

END OF SECTION

SECTION 08110

METAL DOORS AND FRAMES

PART 1 - GENERAL

1.01 SECTION INCLUDES

A. Steel doors and steel door frames.

1.02 REFERENCED SECTIONS

A. The following Sections are referenced in this Section

1. Section 01330 – Submittals
2. Section 08710 – Finish Hardware

1.03 QUALITY ASSURANCE

A. Certificates of Compliance

1. Provide manufacturer's certificates attesting that doors, frames, and accessories meet the specified requirements.
2. Include the grade and model number of each door.

1.04 SUBMITTALS

A. Comply with Section 01330 and include the following items:

1. Shop drawings containing the following information:
    a. Elevations of each door type
    b. Size of doors and frames
    c. Metal gages
    d. Details of door and frame construction
    e. Methods of anchorage
    f. Provisions for and location of hardware
    g. Details of installation
    h. Schedule showing location of each door, frame, and swing of door
2. Detail specifications and instructions for installation, adjustments, cleaning, and maintenance.

1.05 DELIVERY AND STORAGE

A. Doors, frames, and accessories shall be delivered undamaged and with protective wrappings or packaging.

B. Doors and frames shall be stored on platforms under cover in clean, dry, ventilated, and accessible locations, with 1/4-inch airspace between doors.

C. Remove damp or wet packaging immediately wipe dry affected surfaces.

D. Replace damaged materials with new.

PART 2 - PRODUCTS

2.01 STEEL DOORS

A. General

1. 1-3/4 inches thick, 16 gage, and conform to ANSI 100 unless otherwise specified.

2. Composite construction prepared to receive hardware specified in Section 08710.

B. The internal construction of the doors shall conform to one of the following methods, in accordance with the manufacturer's standard practice:

1. Vertical and/or horizontal steel, rigidly formed members shall have sound deadening applied to the inside to eliminate metallic sound incident to normal door operation.

2. Honeycomb, polyurethane, or solid structural mineral core bonded to the inside of both faces of the door.

3. Other methods of reinforcing may be used, provided they achieve the same degree of flatness, rigidity, sound deadening and strength as the methods listed above.

2.02 STANDARD STEEL FRAMES

A. General

1. Steel frames shall conform to ANSI 100, shall be of the sizes and shapes specified, and unless otherwise specified, shall be fully welded unit type frames. Steel frames shall be provided for doors, sidelites, and transoms.

B. Welded Frames

1. Frame faces shall be continuously welded at corner joints.

2. Stops and rabbets shall be mechanically interlocked or continuously welded.

3. All welds shall be ground smooth.

4. Frames shall be mortised and reinforced with heavy gage reinforcements for hinges and lock strikes.

5. Steel spreaders to ensure proper alignment of the frame shall be used and shall remain in place until the adjacent wall construction is complete.

C. Anchors

1. General

a. Provide steel anchors to secure the frame to adjoining construction.

b. Anchors shall be zinc-coated or painted with rust-inhibitive paint, not lighter than 18 gage.

2. Wall Anchors

a. Provide a minimum of four anchors for each jamb.

b. Locate anchors opposite top and bottom hinges and at equal spaces in between.

1) Anchors for masonry work shall be corrugated or perforated steel straps or 3/16-inch diameter steel wire, adjustable or T-shaped.

2) Anchors for stud partitions shall be welded or otherwise securely fastened to backs of frames.

a) Anchors shall be designed and fastened to wood studs with nails, to closed steel studs with sheet metal screws, and to open steel studs by wiring or welding.

3) Frames shall be secured to previously placed concrete or masonry with expansion bolts in accordance with SDI 111-F.

4) Anchors for solid plaster partitions shall be secured solidly to back of frames and tied into the lath.

a) Adjustable top strut anchors shall be provided on each side of frame for fastening to structural members or ceiling construction above.

b) Size and type of strut anchors shall be as recommended by the frame manufacturer.

3. Floor Anchors

a. Provide at bottom of each jamb member, drilled for 3/8-inch anchor bolts.

b. Where floor fill occurs, bottom of frames shall be terminated at the indicated finished floor levels and supported by adjustable extension clips resting on and anchored to the structural slabs.

2.03 INSULATED ROLL-UP DOORS

A. General

1. Doors shall be spring loaded, hand chain operated, coiling doors with steel hood and hand chain lock.

2. Coiling doors shall be Atlas Door, Cornell Iron Works, or approved equal.

3. Provide doors, guides, and accessories from one manufacturer.

4. Provide locking slide bolts on door interior.

B. Material

1. Galvanized steel interlocked curtain with baked-on epoxy modified polyester finish. Color to be selected by the City.

2. Design door and structural steel angles and guides for wind load per ASCE 7-16. A basic wind speed of 100 miles per hour and Exposure Category C shall be used.

3. Spring counter balance housed in a steel pipe with 24 gauge galvanized steel hood.

C. Insulated Door Slat Material Requirements

1. Flame Spread Index of zero and a Smoke Developed Index of 10 as tested per ASTM E84.

2. Minimum Sound Transmission Class (STC) rating of 26 as tested per ASTM E90.

3. Minimum R-value of 8.0 (U-factor of 0.125) as calculated using the ASHRAE Handbook of Fundamentals.

4. Insulation to be CFC Free with an Ozone Depletion Potential (ODP) rating of zero.

D. Weather Stripping

1. Bottom Bar: Replaceable, bulb-style, compressible EDPM gasket extending into guides.

2. Hood: Neorenet/rayon baffle to impede air flow above coil.

2.04 ASTRAGALS

A. Pairs of exterior steel doors which will not have aluminum astragals or removable mullions shall have overlapping steel astragals provided with the doors.

2.05 WEATHER STRIPPING

A. As specified in Section 08710.

2.06 HARDWARE PREPARATION

A. Doors and frames to receive finish hardware shall be reinforced, drilled, and tapped for hardware in accordance with the applicable requirements of SDI 107 and ANSI A115.1 and A115.4.

B. Drilling and tapping for surface-applied hardware shall be done in the field, but additional reinforcing for surface-applied hardware shall be built into the door at the factory.

C. Hardware shall be located in accordance with the requirements of ANSI 100, as applicable.

2.07 FINISHES

A. Hot-Dip Zinc-Coated and Factory-Primed Finish

1. Doors and frames shall be fabricated from galvanized steel, ASTM A653, Coating Designation G60 or A60 (galvannealed).

2. Damaged zinc-coated surfaces shall be repaired by the application of zinc dust paint conforming to DOD-P-21035.

3. Zinc-coated surfaces shall be phosphate treated and factory primed as specified in ANSI 100.

2.08 FABRICATION AND WORKMANSHIP

A. Finished doors and frames shall be strong and rigid, neat in appearance, and free from defects, waves, scratches, cuts, dents, ridges, holes, warp, and buckle.

B. Molded members shall be clean cut, straight, and true, with joints coped or mitered, well formed, and in true alignment.

C. Exposed welded and soldered joints shall be ground smooth.

D. Door frame sections shall be designed for use with the wall construction specified.

E. Corner joints shall be well formed and in true alignment.

F. Conceal fastenings where practicable.

G. On wraparound frames for masonry partitions, a throat opening shall be provided 1/8 inch larger than the actual masonry thickness.

H. Frames in exposed masonry walls or partitions shall be designed to allow sufficient space between the inside back of trim and masonry to receive caulking compound.

2.09 PRODUCT DATA

A. Certificates of compliance specified in paragraph 1.03 shall be provided as product data in accordance with Section 01330.

PART 3 - EXECUTION

3.01 INSTALLATION

A. Frames

1. Set frames in accordance with SDI 105, and plumbed, aligned, and braced securely until permanent anchors are set.

2. Anchor bottoms of frames with expansion bolts or powder-actuated fasteners.

3. Wall anchors shall be built in or secured to adjoining construction.

4. Anchor frames to the struts or bracing where frames require ceiling struts or overhead bracing.

5. Backfill frames with mortar.

6. When an additive is provided in the mortar, inside of frames shall be coated with corrosion-inhibiting bituminous material.

7. For frames to be installed in exterior walls and to be filled with mortar or grout, the stops shall be filled with strips of rigid insulation to keep the grout out of the stops and to facilitate installation of stop-applied head and jamb seals.

B. Doors

1. Hang doors in accordance with clearances specified in ANSI 100.

2. Clean and adjust hardware after erection and glazing.

3.02 PROTECTION

A. Doors and frames shall be protected from damage, and damaged doors and frames repaired prior to completion and acceptance of the project or replaced with new, as directed.

B. Rusted frames shall be wire brushed until all rust is removed, cleaned thoroughly, and applied with an all-over coat of rust-inhibitive paint of the same type used for shop coat.

3.03 CLEANING

A. Thoroughly clean exposed surfaces of doors and frames upon completion.

B. Mastic smears and other unsightly marks shall be removed.

END OF SECTION

SECTION 08710

FINISH HARDWARE

PART 1 - GENERAL

1.01 SECTION INCLUDES

A. Furnish and install all necessary architectural finish hardware to complete the Project. Furnish templates for door and frame preparation.

1.02 REFERENCED SECTIONS

A. The following Section is referenced in this Section.

1. Section 01330 – Submittals

1.03 REFERENCES

A. DHI: Door and Hardware Institute

B. NAAMM: National Association of Architectural Metal Manufacturers

C. NFPA 101: Life Safety Code

1.04 SUBMITTALS

A. Comply with Section 01330.

B. Provide product data on specified hardware. Indicate locations and mounting heights of each type of hardware.

C. Submit manufacturer's parts lists, templates, and installation instructions.

1.05 DELIVERY, STORAGE, AND HANDLING

A. Deliver hardware with items packed separately, complete and ready for installation with necessary fittings, trim, fasteners, and accessories. Mark packages clearly for identification in accordance with Hardware Schedule. Deliver hardware so that work may progress without delay or interruption.

B. Upon delivery of the finish hardware to the job site, the Contractor shall be responsible for all material. Protect hardware from damage at all times prior to and after its installation.

1.06 COORDINATION

A. Coordinate work of this Section with other directly affected Sections involving manufacturer of any internal reinforcement for door hardware.

B. Hardware shall be manufactured to template. Provide templates and, if necessary, the physical hardware to fabricator of doors and frames in ample time to facilitate the work.

1.07 MAINTENANCE MATERIALS

A. Provide special wrenches and tools applicable to each different or special hardware component.

PART 2 - PRODUCTS

2.01 MANUFACTURERS

A. Equivalent products by the other named manufacturers in the list below and within the hardware group listings are also acceptable except for locksets and cylinders.

1. Butts and Hinges: Ives, McKinney, Stanley.
2. Locksets and Latchsets: Schlage.
3. Cylinders: Schlage.
4. Panic Hardware: Von Duprin, Sargent.
5. Slide Bolts and Foot Bolts: McKinney, Stanley.
6. Weather Stripping, Thresholds and Door Bottom Sweeps: Pemko.
7. Stops/Holders: Rockwood, Quality.
8. Closers: LCN Series 4010.
9. Lock Guards: Ives.
10. Silencers: Glynn-Johnson.

2.02 HINGES

A. Provide butt hinges of the five-knuckle, full mortise type, having two or four ball or oilite bearings as noted, stainless steel pins, and complying with ANSI A156.1.

B. Provide all out swinging doors to the exterior with butt hinges of the stainless steel or non-ferrous material, with non-removable pins of the set screw type. Ives 5BB1HW NRP, or equal.

C. Hinge Size:

1. Doors 1-3/4” in thickness to 37” in width shall be provided with 4-1/2” x 4-1/2” butt hinges provided with at least two ball or oilite bearings; wider and heavier doors with 5” x 5” extra heavy butt hinges provided with four ball or oilite bearings.
2. Butt hinges for doors thicker than those noted above or with unusual trim conditions which would interfere with the full opening of the door shall be provided with hinges of sufficient size to support the door weight adequately, and of sufficient width to clear adjacent trim.

D. Number of Hinges per Door Leaf:

1. Provide two hinges per door leaf for doors up to 60” high; three hinges per leaf for doors up to 90” high; one additional butt hinge for each additional 30” in height, or fraction thereof.

2.03 LATCHSETS AND CYLINDERS

A. Design: Provide Schlage Model ND94PD at exterior doors and Schlage Model ND10S at interior doors. All levers shall be Athens style.

B. Provide Large Format Interchangeable Cores.

C. Strikes: Provide each lockset, latchset, or deadlock with a box strike. Provide standard type strikes with extended lips where required to protect adjacent trim from being marred by latch bolt. Verify cutout types provided in metal frames.

D. Deadbolts: Provide keyed deadbolts, double cylinder, at each exterior door, minimum 1-1/2-inch throw, Schlage B562P.

E. Panic Hardware: Exit devices shall be UL listed panic hardware with heavy-duty push pads as manufactured by Von Duprin, 98/99 Series.

2.04 DOOR BOTTOM SWEEPS, THRESHOLDS AND WEATHER STRIPPING

A. All exterior doors shall be fitted with door bottom sweep, threshold set in sealant, and weather stripping.

B. Door bottoms shall be designed to seal space below door and prevent entry of wasps and other pests.

2.05 STOPS/HOLDERS

A. Provide each door leaf with a door stop and latch holder mounted on outside concrete surface with concrete expansion anchors. Provide stops of proper size and height to prevent doors from hitting walls or fixed objects.

2.06 LOCK GUARDS

A. Provide lock guards on all exterior doors. Construct of stainless steel, with 626 brushed chrome finish, with no exposed fasteners on face of unit.

2.07 SILENCERS

A. Provide each door with a press-metal frame with rubber silencers. Provide each single door with three silencers, each pair of doors with four.

2.08 KEYS AND KEYING

A. Provide a construction keying system for Contractor's and/or City's use during construction. Contractor shall retain construction keys and inserts and turn over to the City upon completion of construction.

B. Coordinate the changeover to permanent keyways with the City at completion of station commissioning.

2.09 FINISH

A. All hardware shall have brushed chrome finish (626) for interior and exterior installations typically, unless noted otherwise.

1. Provide over steel base metal (BHMA 626), typical, where required by code.

2.10 HARDWARE SCHEDULE

A. Door hardware sets shall conform to the following schedule. Numbers and references in hardware schedule establish quality to be furnished and installed. Suitable types having similar quality and operation as finish hardware specified may be furnished when approved by the City.

1. Door Hardware Type A: Each door shall have:

3 pairs	Hinges
1	Lockset
1	Strike
1	Door Stop/Holder
1	Closer
1	Threshold
1 set	Weather Stripping
1	Door Bottom Sweep
1 set	Silencers
1	Deadbolt

2. Door Hardware Type B: Each pair of doors shall have:

6 pairs	Hinges
1	Lockset
1	Strike
2	Door Stops/Holders
2	Closers
2	Thresholds
2 sets	Weather Stripping
2	Door Bottom Sweeps
2 sets	Silencers
1	Deadbolt
1 set	Slide Bolts
1 set	Foot Bolts
1	Astragal

3. Door Hardware Type C: Each door shall have:

3 pairs	Hinges
1	Latchset
1	Strike
1	Door Stop/Holder
1 set	Silencers

PART 3 - EXECUTION

3.01 PACKING AND MARKING

A. Package all items of hardware in its individual container marked with the manufacturer's name, type number, and name of item.

B. Each item shall be complete with necessary fastenings, wrenches, spanners, etc., installation instructions, and templates, indelibly, legibly, and carefully marked with an item number corresponding to the room name and hardware group number as indicated on the Plans and hardware schedule provided by supplier.

3.02 EXAMINATION

A. Inspect all doors, frames, and other surfaces to receive items or finish hardware and report all defects which might adversely affect the installation or function of the hardware. Commencement of work will imply acceptance of surfaces as being satisfactory and adequate.

B. Coordinate and be responsible for the proper fabrication of all work or material to receive hardware. No extra cost will be allowed because of changes or corrections necessary to facilitate the proper installation and operation of the hardware.

3.03 INSTALLATION

A. Install hardware in accordance with manufacturer's instructions and requirements of ANSI/NFPA 80, and DHI. Use the templates provided by the hardware item manufacturer.

B. Conform to handicap requirements for positioning requirements for the handicapped.

C. Provide architectural finish hardware with all necessary (plus prudent spares) screws, bolts, or other devices or fastenings of suitable size and type to secure the hardware in position for heavy use and long life, harmonizing as to material and finish. Secure all hardware to concrete with expansion sleeve anchors as indicated by best current practice. All screws normally exposed to view, including all screws for butt hinges, shall have "Phillips" heads, finished to match hardware.

D. Keying

1. Remove construction plugs and install permanent cylinders as required.

2. The master key chart will be provided by the City.

3. The Contractor is responsible for all keying and permanent keys.

4. Provide construction cylinders and keys as required during construction and rekey permanent locksets as directed by City.

END OF SECTION

(THIS PAGE LEFT BLANK INTENTIONALLY)

SECTION 09290

GYPSUM BOARD

PART 1 - GENERAL

1.01 SECTION INCLUDES

A. Gypsum wallboard.

1.02 REFERENCED SECTION

A. The following Section is referenced in this Section

1. Section 01330 – Submittals

1.03 SUBMITTALS

A. Comply with Section 01330.

B. Provide manufacturer's complete product data sheets.

PART 2 - PRODUCTS

2.01 GYPSUM WALLBOARD

A. Gypsum wallboard shall be tapered edge sheets, fire resistant, conforming to ASTM C36, of 5/8-inch thickness unless otherwise shown.

1. The tape, adhesive and reinforcement shall be standard products recommended by the manufacturer of the gypsum wallboard used in the work.

B. Framing components shall conform to ASTM A653, Grade A, G60 galvanized roll formed channel tracks "C" type studs, flanges minimum 1-5/8" wide with rigid attachment to structure.

1. Wire ties to be 18 ga. soft annealed, galvanized. Provide gauge of studs to meet horizontal loads.

PART 3 - EXECUTION

3.01 INSTALLATION

A. Wallboard

1. Except as may be modified by these specifications and by applicable laws and ordinances at the place of building, all work shall be installed to conform to the requirements of ASTM C840.

2. Space fasteners 12 inches on center in the field and eight inches on center staggered along abutting edges and at 12 inches on center for ceilings.

3. Place fasteners no closer than 3/8 inch from ends or edges of wallboard.

4. Apply a three-inch wide uniform coating of adhesive centered over the joint.

5. Center tape over the joint and embed into the adhesive.

6. When dry, sand the joint smooth.

7. Apply two coats of adhesive over the tape, extending each coat slightly beyond the preceding one.

8. Allow each coat to dry and sand smooth.

9. Treat nail dimples in a like manner.

END OF SECTION

SECTION 09900

COATING SYSTEMS

PART 1 - GENERAL

1.01 SECTION INCLUDES

A. Furnishing labor, equipment and material necessary to perform surface preparation and to furnish and apply all paint, protective coatings and finishes as specified herein and/or as indicated on the Plans.

1.02 REFERENCED SECTIONS

A. The following Section is referenced in this Section

1. Section 01330 – Submittals

1.03 QUALITY ASSURANCE

A. Utilize quality assurance procedures and practices to monitor all phases of surface preparation, application and inspection throughout the duration of the project. Procedures or practices not specifically defined herein may be utilized provided they meet recognized and acceptable professional standards and are approved by the Engineer.

B. Materials furnished and work accomplished under the Contract shall be subject to inspection by the Engineer. The Contractor shall be held strictly to the true intent of the Specifications in regard to quality of materials, workmanship, and diligent execution of the Contract.

C. Work accomplished in the absence of prescribed inspection may be required to be removed and replaced under the proper inspection, and the entire cost of removal and replacement, including the cost of all materials which may be furnished by the City and used in the work thus removed, shall be borne by the Contractor, regardless of whether the work removed is found to be defective or not. Work covered up without the authority of the Engineer, shall, upon order of the Engineer, be uncovered to the extent required, and the Contractor shall similarly bear the entire cost of accomplishing all the work and furnishing all the materials necessary for the removal of the covering and its subsequent replacement, as directed and approved by the Engineer.

D. Warranty

1. The City will conduct warranty inspection within eleven months following completion and acceptance of all coating work.

2. The City shall establish a date for the inspection and notify the Contractor five (5) days in advance.

3. Any work found to be defective shall be repaired in accordance with the manufacturer's recommendations, this specification and to the satisfaction of the Engineer.

E. Coating Contractor

1. The Coating Contractor shall hold a current painting license and have a minimum five years practical experience in the application of specified products to surfaces at similar facilities.

1.04 REFERENCE PUBLICATIONS

A. This Section references the following documents. They are a part of this Section as specified and modified. In case of conflict between the requirements of this Section and those of the listed documents, the more stringent requirement shall prevail.

1. SSPC – Society for Protective Coatings

2. AWWA – American Water Works Association

3. NSF/ANSI - NSF International

4. Manufacturer's recommendations

1.05 SUBMITTALS

A. Comply with Section 01330 and submit the following specific information:

1. Manufacturer's product data sheets.

2. Complete data on each type of paint and primer. This shall be done whether or not the product is named herein.

3. Manufacturer's published application instructions.

4. Color chart for each paint for color selection by City.

1.06 DELIVERY AND STORAGE

A. Materials shall be delivered to the site in the manufacturer's sealed containers. Each container shall be labeled by the manufacturer, and the label shall be intact upon delivery. Labels shall give the manufacturer's name, brand, type of paint, batch number, color of paint, date of manufacture, storage life and instructions for reducing. Job mixing or job tinting may be done when approved by the Engineer and for sample colors. No materials shall be delivered that exceed twelve months from the original manufacturing date.

B. Store paint materials and equipment in a storage place protected from weather and excessive heat and cold. Take necessary precautions to reduce hazards to a minimum. Materials exceeding the storage life recommended by the manufacturer shall be removed from the site.

PART 2 - PRODUCTS

2.01 MATERIALS

A. Paint and coating materials furnished for each coating system shall be the products of a single manufacturer. Use only compatible materials in the work. Particular attention shall be directed to compatibility of primers and finish coats.

B. The volatile organic content (VOC) of the applied coatings, as determined in accordance with ASTM D3960, shall comply with prevailing air pollution regulations.

C. If the specified products are not available in formulations that meet applicable regulations on VOC levels at time of application, the Contractor shall submit for review products of equivalent quality and function that comply with regulations in effect at that time.

D. No request for substitution of an "equal" will be considered which decreases the film thickness designated, the number of coats to be applied, solids content by volume, the general type of coating, paint, or primer, or the quantity, quality and type of ingredients in the coatings specified. Paints not listed in the specifications shall be submitted with certified ingredients analysis so that a complete comparison between specified and proposed paint may be made.

2.02 COLORS

A. All colors and shades of colors of all coats of paint shall be as indicated or selected by the City. Each coat shall be of a slightly different shade, to facilitate inspection of surface coverage of each coat. Finish colors shall be as selected from the manufacturer's standard color samples by the City.

B. The Contractor shall submit color chips at least 3-inches by 5-inches in dimension within fifteen (15) days prior to the start of application of the exterior topcoat. The Contractor shall order final coating materials only after receiving written approval from the City Engineer. Failure to obtain the City's approval prior to ordering shall not be cause for additional compensation.

PART 3 - EXECUTION

3.01 COATINGS SYSTEMS

A. Shop Applied Prime Coat:

1. Except as otherwise specified, prime coats shall be shop applied. Shop applied primer shall be compatible with the specific coating system and shall be applied at the minimum dry film thickness recommended by the manufacturer.

2. Approved submittal data identifying the shop primer used shall be provided to the onsite finish coat applicator and to the Engineer before delivery of items to the jobsite.

3. Damaged coatings, coatings beyond the maximum recoat time, and poorly applied shop coatings that do not meet the requirements of this Section shall be repaired by field coating, which may consist of touching up the shop prime coat and then applying the finish coats to achieve the specified film thickness and continuity.

B. Field Coats:

1. Field coats shall consist of one or more finish coats to build up the coating to the specified dry film thickness. Unless otherwise specified, finish coats shall not be applied until the prime and intermediate coats have been inspected.

3.02 PREPARATION

A. General

1. Surfaces to be coated or painted shall be in the proper condition to receive the material specified before any coating or painting is performed.

2. No more abrasive blasting or surface preparation than can be coated or painted in a normal working day will be permitted.

3. Remove sharp edges, burrs and weld spatter.

4. The following levels of surface preparation are subsequently referred to:

   a. White Metal Blast Cleaning (SSPC-SP-5): Removal of all visible rust, mill scale, paint, and foreign matter by blast cleaning by wheel or nozzle (dry) using sand, grit, or shot.

   b. Near-White Blast Cleaning (SSPC-SP-10): Blast cleaning nearly to white metal cleanliness until at least 95 percent of each element of surface area is free of all visible residues.

   c. Commercial Blast (SSPC-SP-6): Blast cleaning until at least 67 percent of each element of surface area is free of all visible residues.

   d. Brush-Off Blast Cleaning (SSPC-SP-7): Blast cleaning of film, rust, loose coatings, and providing a roughened surface for application of a new finish coat.

   e. Solvent Cleaning (SSPC-SP-1): Removal of all grease, oil and dirt.

      1) Clean cloths and clean fluids shall be used in solvent cleaning.

      2) Cleaning and painting shall be scheduled so that dust and spray from the cleaning process will not fall on wet, newly painted surfaces.

      3) Hardware, electrical fixtures, grease fittings, name plates, and similar accessories shall be removed or masked during preparation and paint operations, or shall otherwise be satisfactorily protected.

      4) Equipment adjacent to walls shall be disconnected and moved to permit cleaning and painting of equipment and walls and, following painting, shall be replaced and reconnected.

B. Metallic Surfaces

1. Prepare metallic surfaces in accordance with applicable portions of surface preparation specifications of the Steel Structures Painting Council (SSPC) specified in each coating system. The solvent in solvent cleaning operations shall be as recommended by the manufacturer.

C. Detailed Surface Preparation

1. Surface preparations for each type of surface shall be in accordance with the specific requirements of each coating system.

D. Existing Coating Systems

1. Unless otherwise specified, existing or shop applied coating systems damaged by new construction shall be repaired and coated in accordance with the appropriate system specified for new work.

2. Contractor shall demonstrate that the existing coating is compatible with field coating by applying small test patches of specific paints over existing coatings. If the existing coating is not compatible with the field coat (it lifts or ripples), the

existing coating shall be reprimed with a primer compatible with both the existing coating and the field applied paint, or replaced with the proper prime coat. The primer shall be as recommended by the manufacturer of the field applied paints.

3.03 APPLICATION

A. Workmanship

1. Each coat of paint shall be of the consistency as supplied by the manufacturer, or thinned if necessary, and applied in accordance with the manufacturer's written instructions.

2. Each coat shall be well brushed, rolled, or sprayed to obtain a uniform and evenly applied finish. Work shall be free from "runs", "bridges", "shiners", or other imperfections due to faulty intervals. The finish coats shall be uniform in color and finish.

3. Particular care shall be taken to obtain a uniform, unbroken coating over all bolts, threads, nuts, welds, edges and corners.

4. Further, all weld splatter shall be removed and all welds neutralized with thinner.

B. Paint Properties, Mixing, and Thinning

1. Paint, when applied, shall provide a satisfactory film and smooth even surface, and glossy undercoats shall be lightly sanded to provide a surface suitable for the proper application and adhesion of subsequent coats.

2. Paints shall be thoroughly stirred, strained, and kept at a uniform consistency during application.

3. Coatings consisting of two or more components shall be mixed in accordance with the manufacturer's instructions.

4. Where necessary to suit the conditions of the surface, temperature, weather and method of application, the paint may be thinned immediately prior to use by the addition of not more than one pint per gallon of the proper thinner.

5. Unless otherwise specified, paint shall not be reduced more than necessary to obtain the proper application characteristics. Thinner shall be as recommended by the coating manufacturer.

C. Environmental Conditions

1. Paints shall be applied only to surfaces that are dry, and only under such atmospheric conditions as will cause evaporation rather than condensation.

2. Paint shall not be applied during rainy, misty weather, or to surfaces upon which there is frost or moisture condensation. During damp weather, when the temperature of the surface to be coated is within 10°F of the dew point, the surfaces shall be heated to prevent moisture condensation thereon.

3. During painting, and for a period of at least 8 hours after the paint has been applied, the temperature of the surfaces to be painted, the painted surfaces, and the atmosphere in contact shall be maintained at or above 50°F and not less than 10°F above the dew point.

4. Fans or indirect fired heaters shall be used inside enclosed areas where conditions causing condensation are severe.

5. Paint shall not be applied on surfaces hotter than 120°F.

D. Protection of Coated Surfaces

1. Items which have been coated shall not be handled, worked on, or otherwise disturbed, until the paint is completely dry and hard.

2. After delivery at the site of permanent erection or installation, shop coated metalwork shall be repainted or retouched with specified paint when it is necessary to maintain the integrity of the film.

E. Method of Paint Application

1. Only good, clean brushes and equipment shall be used; and all brushes, buckets, and spraying equipment shall be cleaned immediately at the end of each painting period.

2. If paint is applied by spray, the air pressure used shall be within the ranges recommended by both the paint and spray equipment manufacturers. Spray painting shall be conducted under controlled conditions, and the Contractor shall be fully responsible for any damage occurring from spray painting.

3. Care shall be exercised not to damage adjacent work during sandblasting operations. Stainless steel need not be abrasive blasted. Blasted surfaces shall be coated within 4 hours of being sandblasted. All dust shall be removed from the surfaces prior to painting.

F. Film Thickness and Continuity

1. Coating system thickness is the total thickness of primer and finish coats and does not include passivators or sealers.

2. The surface area covered per gallon of paint for various types of surfaces shall not exceed those recommended by the manufacturer.

3. The first coat (prime coat) on metal surfaces refers to the first full paint coat and not to conditioning, tie coats, sealers or other pretreatment applications.

4. Coatings shall be applied to the thickness specified, and in accordance with these specifications.

5. Unless otherwise specified, the average total thickness (dry) of any completed protective coating system on exposed metal surfaces shall be not less than 1.25 mils per coat, and the minimum thickness at any point shall not deviate more than 25 percent from the required average.

6. The City may, but is not required to, also measure coating thickness, at random locations, after each coat. SSPC –PA 2 (Level 1) is only to be used for the calibration of dry film thickness gauges. This is a minimum maximum dry film thickness specification. Dry film thickness readings will not be averaged. All inspection equipment shall be supplied by the Contractor. All equipment shall have current calibration certificates. The City reserves the right to use their own equipment at any time.

7. Unless otherwise specified, no less than two coats shall be applied.

G. Special Requirements

1. Hangers and supports shall be coated, except for the final coat, prior to the installation.

2. Except for those to be filled with grout, the underside of ungalvanized equipment bases and supports shall be coated with at least two coats of primer specified for System No. 5 prior to setting the equipment in place.

3. Bolts and bolt holes in flanges (such as those used with couplings or wafer type valves where holes and bolts as finally installed will be exposed to weather or moisture) shall be coated prior to assembly to prevent rusting of the unprotected metals.

H. Cleanup

1. Upon completion of coating, the Contractor shall remove surplus materials, protective coverings, and accumulated rubbish, and thoroughly clean all surfaces and repair any overspray or other paint related damage.

3.04 SPARE SUPPLIES

A. Provide one new gallon container of each color and type of paint and each type of solvent and thinner required by the specifications.

3.05 COATING SYSTEMS

A. The coating systems used for different types of surfaces are listed below and followed by specification for each:

B. System No. 2, Submerged Metal – Potable Water

1. Application:

a. Pump bowl and other surfaces in contact with potable water.

2. Surface Preparation:

a. Near-White Blast Cleaning (SP 10)

3. Material:

a. Polyamide Epoxy

Application	Material	Cover, MDFTPC
Primer	Modified Polyamide Epoxy	4 mils
Intermediate	Modified Polyamide Epoxy	4 mils
Finish	Modified Polyamide Epoxy	4 mils

4. Standard of Quality:

a. Tnemec Pota-Pox 80, Series 141; or equivalent products.

5. Color:

a. Intermediate coats shall be contrasting colors.

b. Finish coat shall be white.

C. System No. 5, Exposed Metal – Mildly Corrosive:

1. Application:

   a. All exposed metal including pump discharge heads, pipe, valves, supports, and equipment, and other miscellaneous metal surfaces within the Well site, except electrical panels and other equipment which may be factory finished coated by the manufacturer.

   b. The pump discharge head shall be shipped with a compatible shop applied prime coat and the final coat shall be field applied as specified herein.

   c. Where metal is galvanized, pretreat with Paint System 12.

   d. Where metal is fusion bonded epoxy, solvent clean, and scuff clean with 80 grit sand paper prior to coating application.

2. Surface Preparation:

   a. Solvent Cleaning (SP 1) and wire brush cleaning for shop applied primers. Power tool clean (SP3) for uncoated metal.

3. Material: Modified Epoxy.

   a. Converted epoxy containing rust-inhibitive pigments.

Application	Material	Cover
Primer	Polyamide, Epoxy Primer	1 coat, 5 MDFT
Finish	Polyamide, Anticorrosive Epoxy	1 coat, 5 MDFT

4. Standard of Quality:

   a. Tnemic Chembuild Series 135, Tnemec Epoxoline II, Series V69F; or equal.

5. Color selected by Engineer from color charts.

D. System No. 6, Exposed Metal – Atmospheric

1. Application:

   a. Exposed ferrous metal surfaces to be painted with this system include all exposed building doors, gutters, roof hatches, louvers, and downspouts, and metal trim with the exception of the electrical panels, and other equipment which may be factory painted.

   b. Where metal is galvanized, pretreat with Paint System No. 12.

2. Surface Preparation:

   a. Commercial Blast Cleaning (SP 6)

3. Material:

   a. Epoxy Primer / Acrylic Emulsion

Application	Material	Cover, MDFT
Primer	Rust-Inhibitive Primer	3 mils
Intermediate	Acrylic Emulsion	2 mils
Finish	Acrylic Emulsion	2 mils

4. Standard of Quality:

    a. Tnemec Chembuild Series 135; Enduratone 1029; or equal.

5. Finish Color:

    a. Color selected by City from color charts after submital.

    b. Building trim and equipment shall be contrasting colors.

E. System No. 10, Underground Piping Appurtenances

1. Application:

    a. Unless otherwise specified or factory painted with an approved system, buried pipeline items, such as valves, couplings and bolts shall be coated with this system.

2. Surface Preparation:

    a. Apply only to clean, dry surfaces. Remove rust, paint and other foreign matter wire brushing or scraping.

3. Material:

    a. Tnemec - Two coats of 27WB Black, or equal; 8 mils each coat.

F. System No. 12, Metal – Galvanized, Aluminum, Copper

1. Application:

    a. All galvanized metal. Aluminum, copper and brass to be painted shall be pretreated in accordance with this system.

2. Surface Preparation:

    a. Solvent cleaned in accordance with SSPC-SP-1, “Solvent Cleaning”. Aggressively scarify surfaces to produce a profile between 1.0 and 1.5 mils per SSPC/SP 16.

3. Material:

    a. Apply one pretreatment coat of Tnemec Series 69, or equal, to a dry film thickness of 2 mil.

    b. Next apply the recommended coating or paint for the particular surface to be painted.

G. System No. 102, Masonry – Exterior

1. Application:

    a. Seal exterior masonry surfaces, not otherwise painted, with a silicone rubber water repellent. Include a graffiti protectant sealer where shown on the Drawings.

    b. Exterior waterproofing for masonry surfaces shall be clear water based formulation specifically designed to penetrate the masonry surface and prevent moisture penetration and is not sensitive to ultraviolet and weather deterioration.

    c. The material shall contain no silicone oils, paraffin waxes or urethanes.

d. Masonry color, texture or vapor transmission qualities shall not be affected by the application of the waterproofing.

2. Surface Preparation:

a. Complete and cure masonry and concrete construction for 30 days or more before starting surface preparation work.

b. Remove oil, grease, dirt, salts or other chemicals, loose materials, or other foreign matter by solvent, detergent washing, or other suitable cleaning methods.

c. Clean surfaces of mortar and grout spillage and other surface deposits by rinsing with clean water, or brush-off blasting.

3. Material:

a. Apply two coats of clear water repellent sealer at coverage recommended by material manufacturer.

b. Apply two coats of anti-graffiti coating where indicated on the Drawings at coverage recommended by material manufacturer.

c. Acceptable products:

1) Water Repellent sealer: Protectosil Aqua-Trete Concentrate by Evonik, or equal.

2) Anti-Graffiti Coating: Protectosil Antigraffiti by Evonik, or equal.

H. System No. 103 Masonry - Interior

1. Application:

a. All interior masonry surfaces within the chemical, electrical, and control building.

2. Surface Preparation:

a. Complete and cure masonry and concrete construction for 30 days or more before starting surface preparation work.

b. Remove oil, grease, dirt, salts or other chemicals, loose materials, or other foreign matter by solvent, detergent washing, or other suitable cleaning methods.

c. Clean surfaces of mortar and grout spillage and other surface deposits using one of the following:

1) Nonmetallic fiber brushed and commercial muriatic acid followed by rinsing with clean water, or brush-off blasting.

3. Material:

a. Apply one coat Tnemec 130 Block Filler, 75 SFPGPC to all masonry surfaces.

b. Apply two coats of semi-gloss, off-white, Acrylic Emulsion, Enduratone 1029; or equal.

I. System No. 104 Gypsum Wall Board – Interior

1. Application:

a. All interior gypsum wallboard surfaces.

2. Surface Preparation:

a. Remove oil, grease, dirt, dust, or loose materials.

3. Material:

a. Apply one coat of latex primer/sealer, 350 SFPG, and two coats of semigloss, off-white, acrylic latex, 200 SFPGPC.

J. System No. 105 Concrete Sealant System - Interior

1. Application:

a. Interior concrete including floors, pedestals, housekeeping pads, etc.

2. Surface Preparation:

a. In accordance with manufacturer's written instructions.

3. Material:

a. Kelly-Moore RUST-OLEUM Concrete Saver, 6000 System Epoxy, Color: Clear (6010) or approved equivalent.

b. Contractor shall determine compatibility of concrete curing compound with this product prior to pouring concrete to ensure that the final coating appearance is uniform.

3.06 SURFACES NOT TO BE PAINTED

A. Unless otherwise specified, the following surfaces shall be left unpainted:

1. Stainless Steel

2. Machined Surfaces

3. Glass

4. Aluminum

END OF SECTION

(THIS PAGE LEFT BLANK INTENTIONALLY)

SECTION 09960

HIGH PERFORMANCE COATINGS

PART 1 - GENERAL

1.01 SECTION INCLUDES

A. Materials, surface preparation, application, curing, and inspection for industrial, high-performance coatings on interior and exterior surfaces.

B. Furnish all labor, materials, tools and equipment required to perform surface preparation, coating work, and inspection as specified. Perform all subsidiary and incidental work necessary to complete the work in conformance with the project requirements, to accomplish the approved end result of a totally protected and usable structure, including all attachments, accessories and appurtenances.

1.02 REFERENCED SECTIONS

A. The following Sections are referenced in this Section:

1. Section 01330 – Submittals
2. Section 01340 – Request for Information and Clarifications
3. Section 01600 – Material and Equipment
4. Section 01999 – Reference Forms
5. Section 13224 – Pressure Filter
6. Section 15050 – Piping Systems

1.03 DEFINITIONS

A. Abrasive: Material used for blast-cleaning, such as grit.

B. Abrasive Blast Cleaning: Cleaning/surface preparation by abrasive propelled at high speed.

C. Anchor Pattern: Profile or texture of prepared surface(s).

D. Bug Holes: Small cavities, usually not exceeding 15 mm in diameter, resulting from entrapment of air bubbles in the surface of formed concrete during placement and compaction.

E. Coating/Lining Thickness: The total thickness of primer, intermediate and/or finish coats.

F. Dewpoint: Temperature of a given air/water vapor mixture at which condensation starts.

G. Dry Film Thickness (DFT): Depth of cured film, usually expressed in mils (0.001-inch). Use this definition as opposed to existing definition.

H. Drying Time: Time interval between application and curing of material.

I. Dry to Recoat: Time interval between application of material and ability to receive next coat.

J. Dry to Touch: Time interval between application of material and ability to touch lightly without damage.

K. Feather Edging: Reducing the thickness of the edge of paint.

L. Feathering: Operation of tapering off the edge of a point with a comparatively dry brush.

M. Field Coat: The application or the completion of application of the coating system after installation of the surface at the site of the work.

N. Hold Point: A defined point, specified in this Section 09960, at which work shall be halted for inspection.

O. Holiday: A discontinuity, skip, or void in coating or coating system film that exposes the underlying substrate.

P. Honeycomb: Segregated condition of hardened concrete due to non-consolidation.

Q. Incompatibility: Inability of a coating to perform well over another coating because of bleeding, poor bonding, or lifting of old coating; inability of a coating to perform well on a substrate.

R. Laitance: A layer of weak, non-durable concrete containing cement fine that is brought to the surface through bleed water as a result of concrete finishing/overfinishing.

S. Mil: 0.001-inch.

T. Overspray: Dry spray, particularly such paint that failed to strike the intended surface.

U. Pinhole: A small diameter discontinuity in a coating or coating system film that is typically created by outgassing of air from a void in a concrete substrate resulting in exposure of the substrate or a void between coats.

V. Pot Life: Time interval after mixing of components during which the coating can be satisfactorily applied.

W. Resurfacer/Resurfacing Material: A layer of cementitious and/or resin-sed material used to fill or otherwise restore surface continuity to worn or damaged concrete surfaces.

X. Shelf Life: Maximum storage time for which a material may be stored without losing its usefulness.

Y. Shop Coat: One or more coats applied in a shop or plant prior to shipment to the site of the work, where the field or finishing coat is applied.

Z. Spreading Rate: Surface area covered by a unit volume of paint at a specific film thickness.

AA. Stripe Coat: (SSPC Guide 11) A separate coat of paint applied to all weld seems, pits, nuts/bolts/washers, and edges by brush. This coat shall not be applied until any previous coat(s) have cured and, once applied, shall be allowed to cure prior to the application of the subsequent coat(s).

BB. Surface Saturated Dry (SSD): Refers to concrete surface condition where the surface is saturated (damp) without the presence of standing water.

CC. Tie Coat: An intermediate coat used to bond different types of coatings. Coatings used to improve the adhesion of a succeeding coat.

DD. Touch-Up Painting: The application of paint on areas of painted surfaces to repair marks, scratches, and areas where the coating has deteriorated to restore the coating film to an unbroken condition.

EE. Volatile Organic Compound (VOC) Content: The portion of the coating that is a compound of carbon, is photo chemically reactive, and evaporates during drying or curing, expressed in grams per liter (g/l) or pounds per gallon (lb/gal).

FF. Immersion: Refers to a service condition in which the substrate is below the waterline or submerged in water or wastewater at least intermittently if not constantly.

GG. Weld Spatter: (NACE SPO-178)Beads of metal scattered near seam during welding.

HH. Wet Film Thickness (WFT): The primer or coating film's thickness immediately following application. Wet film thickness is measured in mils or thousandths of an inch (0.001-inch) and is abbreviated WFT.

1.04 REFERENCES

A. ANSI – American National Standards Institute

B. ASTM – American Society for Testing and Materials

C. CSA – Canadian Standards Association

D. IAPMO – International Association of Plumbing and Mechanical Officials

E. SSPC – The Society for Protective Coatings

F. NACE International – National Association of Corrosion Engineers International

G. NSF International – National Sanitation Foundation International

H. UL – Underwriters Laboratories

I. WQA – Water Quality Association

1.05 SUBMITTALS

A. Comply with Section 01330.

B. Finish Schedule

1. Submit a complete Finish Schedule that includes the surfaces in the Finish Schedule herein and any additional surfaces to be coated by the products submitted under this Section 09960. Indicate the specific products and manufacturer for each item (equipment, substrate, or structure) to be coated.

2. Submit a color card or fan deck for each manufacturer and coating product submitted. Items in the complete Finish Schedule shall be confirmed with City-approved colors for each location prior to ordering materials.

C. Product Technical Data

1. Product Data Sheets: Submit coating manufacturer's technical data on products and recommended use. Include the brand name and series number of all coatings to be used. Submit product data sheets for all coating systems that include the following information:

a. VOC data.

b. Storage requirements.

c. Primer type, where required.

d. Maximum dry and wet mil thickness per coat.

e. Minimum and maximum curing time between coats and final cure times, including atmospheric conditions for each.

f. Curing time before submergence in liquid.

g. Thinners/solvents for reduction and cleaning.

h. Ventilation requirements.

i. Minimum and maximum atmospheric and substrate application conditions.

j. Allowable application methods.

k. Maximum allowable moisture content (concrete substrates).

l. Maximum shelf life.

2. Material Safety Data Sheets (MSDS): Submit coating manufacturer's Material Safety Data Sheets (MSDS) for products to be used on the project, including solvents, additives, cleaners, and thinners.

3. Surface Preparation Criteria: Submit coating manufacturer's surface preparation criteria, including recommended surface profile range after abrasive blasting.

4. Application Instructions: Submit Coating manufacturer's application instructions and equipment recommendation.

D. Certifications

1. VOC Content: Submit coating manufacturer's certification indicating that the submitted coatings meet regulations for allowable VOC content in the place of application and use intended.

2. NSF 61 Certification: Submit NSF 61 certification or listing for products applied to surfaces in contact with process (potable or to be treated to potable) water.

3. Compatibility Confirmation: Submit written confirmation by the shop and field applied coating manufacturers indicating that the compatibility between the shop and field applied coatings have been checked and approved by those manufacturers.

E. Coating Plan/Program

1. Cleaning and Abrasive Blasting Equipment: Submit abrasive blast cleaning and application equipment list and complete procedures for its use.

2. Coating System Treatment and Termination: Submit detailed, written instructions and/or graphic details for coating system treatment and coating system terminations for items to be coated in the project.

3. Overspray and Fugitive Dust Prevention: Submit contractor's written program for over spray prevention.

4. Recoating Information and Schedule: Submit information that defines the end date for field coating application for all equipment, machinery, and piping to ensure that the maximum recoat time for the shop applied primers will not be exceeded when field applied coatings are installed.

F. References and Qualifications

1. Manufacturer Project References: Submit a minimum of five project references, including current contact name, address, and telephone number where proposed coating products have been successfully used in similar coating applications within the past 5 years.

2. Applicator Project References: Submit a minimum of five project references, including current contact name, address, and telephone number where the Coatings Applicator has successfully performed similar coating work within the past 5 years.

3. Applicator Quality Assurance: Submit a letter from the selected and approved coating manufacturers for the project that verifies that the applicator meets the qualifications and quality assurance requirements in this Section (09960).

4. Inspector Qualifications: Submit Qualifications for Quality Control personnel to be provided on site by the Contractor including, but not limited to, the inspector's NACE and SSPC Certification numbers for the certifications as requested in this Section (09960).

1.06 QUALITY ASSURANCE

A. Regulatory Requirements

1. All work, materials, procedures, and practices under this Section 09960 shall conform to the requirements of the applicable Federal, State, County, and local regulations and ordinances. The Contractor shall be responsible for securing any and all licenses, certificates, and permits required for the work at no additional cost to the City.

2. Prime and finish coat painting done at the project site or in locations other than the project site shall be in accordance with the air quality regulations in effect at the place the coating is applied.

3. All debris (liquid or solid) generated from surface preparation or coating activities shall be tested and disposed offsite in accordance with applicable Federal, State, County, and local regulations and ordinances. The Contractor shall be responsible for all required testing, monitoring, reporting, licenses, permits, and fees at no additional cost to the City.

B. Unit Responsibility

1. Assign unit responsibility for the materials, surface preparation, and coatings application to the Coatings Application Subcontractor.

2. Provide a certificate of Unit Responsibility. See Section 01999.

C. Materials

1. Contaminated, outdated, diluted materials, and/or materials from previously opened containers shall not be used.

2. Each coating system shall have only one product used for the finish coat to ensure consistency in appearance throughout the project.

3. Delivery of coating system materials shall be in original, unopened containers with seals unbroken and labels intact. Labels shall identify type of material, color, and batch number. No material shall exceed six months from the original batch manufacturing date (No exceptions).

4. For repairs, the Contractor shall provide the same products, or products recommended by the coating manufacturer, as used for the original coating.

D. Qualifications

1. Coatings Manufacturer Requirements

a. Minimum of ten (10) years of successful experience manufacturing protective coatings. Submit list of references to demonstrate successful performance on comparable projects.

2. Coatings Applicator Requirements

a. Hold a valid State of California Contractor's Class C 33 Painting and Decorating Contractors license for performing abrasive blast cleaning and coating work.

b. Coating applicator must be QP-1 and QP-2 certified by SSPC for coating work relevant to QP-1 and QP-2.

c. Minimum of five (5) years practical experience and successful history in the application of similar products on comparable projects. Submit list of references.

E. Pre-Construction Conference

1. Schedule pre-construction conference with the City.

2. Do not proceed without holding a pre-construction conference with the City, Contractor, Inspector, Fabricator, Coating Applicator and Manufacturer.

3. Topics for discussion include:

a. Site conditions

b. Coating materials and manufacturer's application recommendations.

c. Surface preparation prior to abrasive blast cleaning.

d. Specification compliance of blast abrasives and surface profile requirements.

e. Schedule of field surface preparation and coating application, and order of the work.

f. List of equipment and procedures for cleaning, blasting, coating application, ventilation and dehumidification (if required).

g. Safety programs and the enforcement to be used during the course of the work.

h. Weather limitations for acceptable work.

i. Inspection facilities and equipment to be provided.

j. Hold points and inspector’s authority.

k. Establish non-conformance procedures, and chain of command and who signs off on completion of bringing the job back into compliance.

l. Procedures for over-spray prevention.

F. Coatings Applicator Personnel

1. Provide a supervisor at the work site during cleaning, surface preparation, and coating operations.

2. Provide skilled personnel qualified to perform work to industry standards of practice and safety, maintain continuity of personnel, and coordinate any transfer of personnel with the City.

G. Quality Control Requirements

1. The Contractor is responsible for ensuring that the surface preparation and coating activities meet the requirements of this specification. Observations by the Engineer, or a representative of the coating manufacturer, will not relieve or limit the Contractor's responsibilities.

2. Coatings application shall conform to requirements of this specification and the referenced standards. Changes in the coating system installation requirements will be allowed only with the written authorization of the Engineer before work commences.

3. The Contractor shall conduct the work and maintain appropriate and measurable quality control activities to ensure that the coating systems are installed as specified. Coating system work that does not conform to the Specifications or is otherwise not acceptable shall be corrected in accordance with the coating manufacturer's written procedures.

   a. Measure all dry film thicknesses. Readings shall be conducted as defined in SSPC-PA2.

   b. The City may, but is not required to, also measure coating thickness, at random locations, after each coat. SSPC –PA 2 (Level 1) is only to be used for the calibration of dry film thickness gauges. This is a minimum maximum dry film thickness specification. Dry film thickness readings will not be averaged. All inspection equipment shall be supplied by the Contractor. All equipment shall have current calibration certificates. The City reserves the right to use their own equipment at any time.

4. The Contractor shall prepare and submit coating work daily reports for each day while on site. The coating work daily reports shall be submitted to the Engineer no later than 1:00 p.m. the following workday. The coating work daily reports shall include the following:

   a. Number of coating applicator employees on site.

   b. Start and finish time of work shift.

   c. Climatic conditions at 4-hour intervals (i.e., partly cloudy, air temperature 78°F, relative humidity 63%, dew point 68°F, and WNW wind @ 4 mph).

d. Major equipment on site regardless of utilization (i.e., trailers, air compressors, generators, spray pumps, scaffolding, aerial lifts, pressure washers, and sandblast pots).

e. Inventory of coatings, solvents and abrasive media stored on site including information relative to deliveries received each day.

f. Summary of work performed to include:

1) Substrates/structures prepared (size, quantity, and location).

2) Surface preparation methods including materials consumed and equipment utilized.

3) Substrates/structures coated (size, quantity, and location).

4) Mixing method and time mixed (coating materials).

5) Induction time, pot life, and application start time.

6) Coating application methods including equipment utilized.

7) Application finish time.

8) Coating materials consumed [sequencing, product name, batch number(s) and manufacture date].

9) Problems encountered (i.e., equipment malfunctions or disruption/interference by other trades).

10) Accidents or near misses.

11) Quality control testing results.

H. On-site Inspection

1. The Contractor shall identify the points of access for inspection. The Contractor shall provide ventilation, ingress and egress, and other means necessary for the City's personnel to safely access the work areas.

2. The specified quality control tasks shall be performed by an individual who has been properly trained and has a minimum of 5 years of experience. The Contractor shall provide the Engineer documentation indicating that the individual designated to perform quality control has received training similar to NACE CIP Level 3, SSPC PCI Level 2, and, has a minimum of 5 years field experience with similar type projects.

3. Acceptance criteria for each Quality Control test shall be as indicated on the manufacturer's published data or in this specification, whichever is more stringent.

1.07 WARNINGS

A. Application of paint, epoxy, and protective coating materials may be hazardous. Take all necessary precautions to ensure the safety of workers and property.

B. Part of this work requires abrasive blasting. This may require the use of special equipment. Become familiar with the existing site conditions and take all steps necessary to protect adjacent facilities and personnel, at no additional cost to the City. Abrasive blasting and painting is called for in, on, or around mechanical equipment, which may be damaged by grit, dust, or painting overspray. Mask, wrap, enclose, and provide all protection required to safeguard this equipment at no additional cost to the City.

C. Perform abrasive blasting activities in a manner that will not cause nuisance.

1.08 EXTRA MATERIALS

A. Supply 1 gallon of each color, type, and surface texture. Store where directed.

B. Label each container with color, type, texture, and room locations, in addition to manufacturer's label.

1.09 WARRANTY

A. Provide material and workmanship warranty for coatings of 18 months from date of final acceptance by the City

B. Complete the Extended Warranty Form in Section 01999.

C. See also Paragraph 3.10.

PART 2 - PRODUCTS

2.01 MANUFACTURERS

A. Products identified for each coating system are the product names from specific manufacturers. Coatings products from other manufacturers and of equal or higher quality and performance may also be acceptable.

1. Requests for Substitution of Alternative Coatings Products:

a. Include the full name of each product, descriptive literature, test data, data on past performance, manufacturer's instruction for use, generic type, and its nonvolatile content by volume.

b. Demonstrate product and performance is equivalent to the specified materials and complete systems.

c. Demonstrate that the coatings manufacturer has local qualified representation which will provide onsite technical support to resolve field problems with the manufacturer's products, materials or application for the duration of the project.

B. Requests for substitution of alternative coating products that decreases the specified dry-film thickness or the number of coats to be applied, or which changes the generic type of coating specified, will not be considered.

2.02 ABRASIVES FOR BLAST CLEANING

A. Use only new materials that are clean and free of contaminants.

B. Materials must be certified by the California Air Resources Board (CARB) for use in dry, open air abrasive blasting.

C. The Contractor shall use abrasive grit for field blast cleaning conforming to the following:

1. Produce a sharp angular surface profile of 1.5 to 2.5 mils

2. New, clean and free of contaminants (SSPC AB 1), and containing no hazardous materials.

D. Comply with all applicable requirements of Cal/OSHA and the Bay Area Air Quality Management District. Abrasives shall be certified by California Air Resources Board, Executive Order G-565.

E. Purchase only from firms which can accept spent abrasives, then process spent abrasives for recycle or proper disposal.

2.03 COATING SYSTEMS

A. System No. 1 – Zinc-Epoxy-Polyurethane System

1. Surface: Metal.

2. Service: Interior; exterior; exposed to direct sunlight; not immersed.

3. Surface Preparation

a. Shop-Primed Metal

1) Clean shop-primed surfaces in accordance with SSPC SP-2 (Hand Tool Cleaning).

2) Clean damaged shop-coated areas in accordance with SSPC SP-3 (Power Tool Cleaning) and recoat with specified primer.

3) For factory-coated or shop-primed pumps, tanks, and other equipment, delete zinc-rich primer and use compatible primer as recommended by the coating manufacturer. All repair areas shall be abraded and de-glossed and feathered into a smooth transition.

b. Bare Metal

1) Prepare surface in accordance with SSPC SP-6 (Commercial Blast Cleaning) to 1.5 to 2.5 mil (Thin film systems)surface profile.

2) For ductile iron pipe, prepare surfaces in accordance with NAPF 500-03, NAPF 500-03-04, and NAPF 50.

3) Clean ferrous metal with bleeding in accordance with SSPC SP-11 (Power Tool Cleaning to Bare Metal).

4) Spot blast areas of rust penetration to SSPC SP-10 (Near White Blast) and spot prime with specified primer.

c. Galvanized Metal

1) Clean damaged galvanized steel areas with exposed ferrous metal and/or rust in accordance with SSPC SP-5 (White Metal Blast Cleaning) or SSPC SP-11 (Power Tool Cleaned to Bare Metal) to achieve uniform 1.0 to 1.5 mil profile; spot prime with specified primer.

2) Prepare galvanized, non-ferrous metal in accordance with SSPC SP-16 to impart uniform 1.0 to 1.5 mil profile.

3) For galvanized steel, delete zinc primer.

4. Primer

   a. Field apply one coat of zinc-rich epoxy primer, or polyurethane primer where zinc-rich primer is to be omitted, compatible with urethane finish; comply with written instructions of coating manufacturer.

   b. Thickness: 3.0 to 4.0 dry mils.

   c. Products: Sherwin Williams, Zinc Clad 4100; Carboline, 859; or equal.

5. Intermediate

   a. Field apply one coat of intermediate or primer epoxy.

   b. Thickness: 5.0 to 6.0 dry mils.

   c. Product: Sherwin Williams, Macropoxy 646 FC; Carboline, Carboguard 890; or equal.

6. Finish

   a. Field apply one coat of polyurethane finish.

   b. Thickness: 2.0 to 3.0 dry mils.

   c. Product: Sherwin Williams, Hi Solids Polyurethane 250; Carbothane 134VOC; or equal.

B. System No. 2 – NSF Epoxy

1. Surface: Metal.

2. Service: Interior of tanks and other metal components in contact with water.

3. Surface Preparation

   a. Shop-Primed Metal

      1) Clean shop-primed surfaces in accordance with SSPC SP-2 (Hand Tool Cleaning) or SSPC SP-3 (Power Tool Cleaning).

      2) Clean damaged shop-coated areas in accordance with SSPC SP-5 (White Metal Blast Cleaning) and spot prime with specified primer. Cleaning shall produce a surface profile of 2.0 to 2.5 mils.

      3) Shop epoxy primed surfaced shall require abrasive blasting or abrading per SSPC-SP 7 prior to receiving finish coats if the maximum recoat limit has been exceeded for the primer. This cleaning shall produce a uniform surface profile of 1.0 to 1.5 mils in the intact primer.

   b. Bare Ferrous Metal

      1) Prepare surface in accordance with SSPC SP-5 (White Metal Blast Cleaning) to 2.0 to 2.5 mil surface profile.

   c. Nonferrous and Galvanized Metal

      1) Prepare in accordance with SSPC SP-16 to achieve a uniform 1.0 to 1.5 mil profile.

4. System Thickness: Minimum 10 mils dry film.

5. Primer

   a. Field apply one coat of the epoxy primer at the manufacturer's recommended dry film thickness.

   b. Products: Sherwin Williams, Macropoxy 646; Carboline, Carboguard 691; or equal.

6. Finish

   a. Field apply one or more coats of the epoxy finish at the manufacturer's recommended dry film thickness per coat to the specified system thickness.

   b. Product: Sherwin Williams, Macropoxy 646; Carboline, Carboguard 691; or equal.

C. System No. 3 – Polyamidoamine Epoxy

1. Surface: Metal.

2. Service: Below grade (buried, exterior) in contact with soil.

3. Surface Preparation

   a. Shop-Primed Metal

      1) Clean shop-primed surfaces in accordance with SSPC SP-2 (Hand Tool Cleaning) or SSPC SP-3 (Power Tool Cleaning).

      2) Clean damaged shop-coated areas in accordance with SSPC SP-10 (Near White Metal Blast Cleaning) and spot prime with specified primer. Cleaning shall produce a surface profile of 2.0 to 2.5 mils.

      3) Shop epoxy primed surfaced shall require abrasive blasting or abrading per SSPC-SP 7 prior to receiving finish coats if the maximum recoat limit has been exceeded for the primer. This cleaning shall produce a uniform surface profile of 1.0 to 1.5 mils in the intact primer.

   b. Bare Ferrous Metal

      1) Prepare surface in accordance with SSPC SP-10 (Near White Metal Blast Cleaning) to 2.0 to 2.5 mil surface profile.

4. System Thickness: Minimum 16 mils dry film.

5. Finish

   a. Field apply two or more coats at the coating manufacturer's recommended dry film thickness per coat to the specified system thickness.

   b. Product: Sherwin Williams, Macropoxy 646; Carboguard 890; or equal.

D. System No. 4 – Acrylic (Latex)

1. Surface: PVC and CPVC pipe.

2. Service: Exterior; direct sunlight exposure.

3. Surface Preparation

   a. Clean plastic pipe with a solvent compatible with the specified primer.

   b. Sand plastic pipe to uniformly abrade and de-gloss surfaces to achieve a surface profile of 1.0 to 1.5 mils. Vacuum clean after sanding to remove loose dust, plastic particles, and dirt.

4. System Thickness: Minimum 3 mils dry film.

5. Primer

   a. Field apply one coat of acrylic primer.

   b. Thickness: To the coating manufacturer's recommended dry film thickness.

   c. Product: Sherwin Williams, Extreme Bond; Carboline, Sanitile 120; or equal.

6. Finish

   a. Field apply one or more coats at the coating manufacturers recommended dry film thickness per coat to provide the specified system thickness.

   b. Thickness: To system thickness.

   c. Product: Sherwin Williams, Sher-Cryl HPA; Carboline, Carbocrylic 3359 DTM.

E. System No. 5 – Two component Polycyclamine

1. Surface: Concrete.

2. Service: Interior in chemical containment areas and sumps.

3. Surface Preparation: SSPC/13 surface profile equal to ICRI N0. 6.

4. Primer: International Ceilcote #680 0ne coat @ 5.0 to 10.0 mils DFT, or equal.

5. Finish: International Enviroline #225 40.0 to 60.0 mils DFT, or equal.

6. Color: Off white or gray

7. Other: Holiday test per ASTM D 4787 Finish shall be free of pinholes including visual pinholes, runs, overspray, and even in color and finish.

2.04 FINISH SCHEDULE

A. The following Finish Schedule identifies major structures, equipment, and substrates to be coated in accordance with this Section 09960. The Finish Schedule is not intended to be a complete listing of all surfaces to be coated and other requirements may be identified elsewhere in the Specifications or on the Drawings. There may be additional surfaces for the project that require coating application which may not be listed in the Finish Schedule, and the Contractor shall be responsible for coating those surfaces in accordance with the requirements of this Section 09960.

Structure	Substrate	Coating System	Color
Backwash Tank – Interior	Ferrous Metal	No. 2	Determined by City
Backwash Tank – Exterior	Ferrous Metal	No. 1	Determined by City
Filter Vessel – Interior	Ferrous Metal	See Section 13224	Determined by Manufacturer
Filter Vessel – Exterior	Ferrous Metal	No. 1	Determined by City
Exposed DI and Steel Piping	Ferrous Metal	No. 1	Determined by City
Buried DI and Steel Piping	Ferrous Metal	No. 3	Determined by Manufacturer
Exposed PVC Piping	Thermoplastic	No. 4	Determined by City
Chemical Storage Area – Floors and Spill Containment Walls	Concrete	No. 5	Determined by City

B. The Contractor shall be responsible to identify any surfaces for which there is a question about what standard coating system to apply. about what standard coating system to apply as part of the work covered by this Section 09960 through a Request for Information in accordance with Section 01340.

PART 3 - EXECUTION

3.01 PRODUCT SHIPMENT, PROTECTION, AND STORAGE

A. Comply with Section 01600.

B. Delivery

1. Deliver in original sealed containers identified with labels indicating manufacturer; product name and number; color, batch or lot number, and date of manufacture.

2. Note the date of manufacture and apply coatings prior to the expiration of the guaranteed storage life.

3. Coating materials exceeding storage life will be rejected.

C. Storage

1. Store coating materials in enclosed structures to protect from weather and excessive heat or cold.

2. Coatings stored at above or below manufacturers recommendations will be rejected.

3. Comply with state and local requirements for flammable materials.

3.02 SCAFFOLDING

A. Furnish, maintain, and remove scaffolding, ladders, planks required for application of coatings. Scaffolding, ladders, and rigging shall be designed for their intended use and shall comply with OSHA requirements.

B. Where requested by the City, provide ladders or scaffolding to facilitate inspection of the specified work.

3.03 HEALTH AND SAFETY REQUIREMENTS

A. General

1. Comply with the applicable health and safety requirements of OSHA and the recommendations of the product manufacturer.

2. Provide and require the use of proper personal protective and life saving equipment for all persons visiting or working in or about the project site.

B. Ventilation: Ventilate work areas to control potential exposure and hazard to workers and employees of the plant.

1. Furnish and install temporary ventilation system to remove contaminated air, vapors, and other potential hazardous substances from confined spaces and interiors of containment structures. Forced air ventilation is required during blast cleaning, abrasive removal, coating application, and curing in confined spaces.

2. Ventilation system equipment shall be explosion proof, of industrial design, and of adequate capacity to reduce the concentration of air contaminants to the degree that a hazard to workers or employees of the plant does not exist. Size ventilation system to maintain air changes within the confined space per OSHA regulations.

C. Illumination

1. Provide spark proof artificial lighting for all work in confined spaces.

2. Equip light bulbs with a protective cage to prevent breakage.

3. For lighting fixtures and bulbs, comply with the requirements of Section 70 of the National Fire Protection Association (NFPA), "National Electric Code", for the applicable atmosphere.

4. For lighting and other electrical systems, provide ground fault type, complying with NFPA 70.

5. Provide the following minimum illumination during all phases of work:

a. General work area: 25-Foot Candles.

b. Surface preparation and coating application: 30-Foot Candles.

c. Inspection: 50-Foot Candles per SSPC-Guide 12.

6. As directed by the City, provide additional illumination to fully illuminate all areas to be inspected.

D. Noise

1. Whenever the occupational noise exposure exceeds the maximum allowable sound level as set forth by OSHA regulations, the regional Air Pollution Control District and/or the City of Milpitas, provide and require the use of approved ear protection devices.

2. General maximum sound levels for the project are defined as those which will not affect routine facility or neighborhood activities.

3. Whenever levels are objectionable, or exceed these limits, adjust operations to reduce noise levels, as directed by the City or the local agency of jurisdiction.

E. Fire Extinguishers

1. Keep a minimum of two (2) ten pound (10-lb) ABC type fire extinguishers present in the work area whenever work is proceeding.

2. Train all personnel in the use of this type of fire extinguisher.

F. Comply with OSHA and applicable regulations and carefully follow the manufacturer's recommendations, precautions, and warnings regarding the handling and use of all surface preparation and coating materials and equipment.

G. Use coating equipment designed for application of the material specified and maintain in good working condition at all times.

3.04 ENVIRONMENTAL CONTROL

A. Carefully contain paints and solvents. Do not allow them to penetrate the soil.

B. Dispose of waste material in a legal manner. All stationary operating equipment shall be placed into secondary containment.

3.05 PREPARATION

A. General

1. Surface preparations for each type of surface shall be in accordance with the specific requirements of each Coating Systems Description. In the event of a conflict the Coating Systems Description shall take precedence.

2. Surfaces to be coated shall be clean and dry. Before applying coating or surface treatments, oil, grease, dirt, rust, loose mill scale, old weathered coatings, and other foreign substances shall be removed. Oil and grease shall be removed before mechanical cleaning is started. Where mechanical cleaning is accomplished by blast cleaning, the abrasive used shall be washed, graded and free of contaminants which might interfere with the adhesion of the coatings. The air used for blast cleaning shall be sufficiently free of oil and moisture to not cause detrimental contamination of the surfaces to be coated.

3. The Contractor shall verify at a minimum of two times daily that air supply is free of oil and moisture contamination (ASTM D-4285). The Contractor shall use effective oil and water separators in all main compressor airlines and shall be placed as close as practicable to the equipment. Prior to using compressed air, the Contractor shall test the quality of air downstream of the separators at suitable outlets by blowing the air on clean white blotter for 2 minutes to check for any contamination, oil, or moisture.

4. Cleaning and coating shall be scheduled so that dust and spray from the cleaning process shall not fall on wet, newly coated surfaces. Hardware, hardware accessories, nameplates, data tags, machined surfaces, sprinkler heads, electrical fixtures, and similar uncoated items which are in contact with coated surfaces shall be removed or masked prior to surface preparation and painting operations. The Coating Inspector will examine surfaces after abrasive blast cleaning to verify

that all deposits of contaminants have been removed as per surface clean as per ISO 8502 (Class 2). The Contractor shall blow down and vacuum all surfaces prior to City inspection. Tank floors shall be vacuumed. Following completion of coating, removed items shall be reinstalled. Equipment adjacent to walls shall be disconnected and moved to permit cleaning and painting of equipment and walls and, following painting, shall be replaced and reconnected.

5. Containment: The Contractor shall erect and maintain protective enclosures as required to ensure that surface preparation debris, including dust, is contained within the immediate work area. All costs associated with containment shall be paid by the Contractor.

6. Dust and Contaminants: Protect substrate from excessive dust and airborne contaminants during coating application and curing. Use temporary dust barriers to close off areas being painted from areas where other work is being performed.

B. Abrasive Blast Cleaning

1. When abrasive blast cleaning is required to achieve the specified surface preparation the following requirements for blast cleaning materials and equipment shall be met:

   a. Used or spent blast abrasive shall not be reused on this project.

   b. The compressed air used for blast cleaning shall be filtered and shall contain no condensed water and no oil. Moisture traps shall be cleaned at least once every four hours or more frequently as required to prevent moisture from entering the supply air to the abrasive blasting equipment.

   c. Oil separators shall be installed just downstream of compressor discharge valves and at the discharge of the blast pot discharges. These shall be checked on the same frequency as the moisture traps as defined in Item 2 above.

   d. Regulators, gauges, filters, and separators shall be in use on compressor air lines to blasting nozzles times during this work.

   e. An air dryer or desiccant filter drying unit shall be installed which dries the compressed air prior to blast pot connections.

   f. The air dryer shall be used and maintained for the duration of surface preparation work.

   g. The contractor shall provide ventilation for airborne particulate evacuation (meeting pertinent safety standards) to optimize visibility for both blast cleaning and inspection of the substrate during surface preparation work.

   h. If, between final surface preparation work and coating system application, contamination of prepared and cleaned metallic substrates occurs, or if the prepared substrates' appearance darkens or changes color, re-cleaning by water blasting, re-blasting and abrasive blast cleaning shall be required until the specified degree of cleanliness is reclaimed.

   i. The contractor is responsible for dust control and for protection of mechanical, electrical, and other equipment adjacent to coatings work.

C. Solvent Cleaning

1. Any solvent wash, solvent wipe, or cleaner used, including but not limited to those used for surface preparation in accordance with SSPC SP-1 Solvent Cleaning shall be of the emulsifying type which emits no more than 340 g/l VOCs for AIM regions, 250 g/l for CARB regions and 100 g/l for SCAQMD regions, contains no phosphates, is biodegradable, removes no zinc, and is compatible with the specified primer.

2. Clean white cloths and clean fluids shall be used in solvent cleaning.

D. Ferrous Metal Substrates

1. Ferrous surfaces shall be prepared in accordance with applicable surface preparation specifications of SSPC/NACE specified for each coating system. Specific surface preparation requirements are stated in the Coating Systems Description. The profile depth of the surface to be coated shall be in accordance with the Coating Systems Description requirements and shall be measured by Method C of ASTM D4417. Blast particle size shall be selected by the Contractor to produce the specified surface profile. The solvent in solvent cleaning operations shall be as recommended by the coating manufacturer.

2. Preparation of ferrous metal surfaces shall be based upon comparison with SSPC-VIS1, and as described in the Coating Systems Description for each coating system. If dry abrasive blast cleaning is selected and to facilitate inspection, the Contractor shall, on the first day of cleaning operations, abrasive blast metal panels to the standards specified. Plates shall measure a minimum of 8-1/2 inches by 11 inches. Panels meeting the requirements of the specifications shall be initialed by the contractor and the City and coated with a clear nonyellowing finish. One of these panels shall be prepared for each type of abrasive blasting and shall be used as the comparison standard throughout the project.

3. Blast cleaning requirements for steel, and ductile-iron, are as follows:

   a. Ferrous steel piping shall be prepared in accordance with SSPC SP-6 and primed before installation.

   b. Ductile-iron piping surfaces including fittings shall be prepared in accordance with NAPF 500-03, NAPF 500-03-04, and NAPF 50.

   c. Remove traces of grit, dust, dirt, rust scale, friable material, loose corrosion products or embedded abrasive from substrate by vacuum cleaning prior to coating application per ISO 8502 (Class 2). .

   d. Care must be taken to prevent contamination of the surface after blasting from worker's fingerprints, deleterious substances on workers' clothing, or from atmospheric conditions.

E. Thermoplastic

1. Prepare surfaces of PVC by sanding to establish uniform surface roughness and to remove gloss from the substrate. Vacuum clean surfaces to remove loose dust, dirt, and other materials. Next, solvent clean using clean white rags and allow solvent to completely evaporate before application of coating materials.

3.06 APPLICATION

A. Workmanship

1. Coated surfaces shall be free from excessive runs, sags, drips, ridges, waves, laps, and brush marks. Coats shall be applied to produce an even film of uniform thickness completely coating corners and crevices. Minor and infrequent runs and sags which are within the total specified DFT plus a few mils – no more than 10% more mils than the specified total DFT shall be acceptable. Frequent runs or sags which exceed these limits or are detrimental to coating system performance are not acceptable.

2. The Contractor's spray equipment shall be designed for application of the materials specified. Compressors shall have suitable traps and filters to remove water and oils from the air. Spray equipment shall be equipped with mechanical agitators, pressure gages, and pressure regulators, and properly sized spray tips.

3. Each coating application be applied evenly and sharply cut to line. Care shall be exercised to avoid overspray or spattering paint on surfaces not to be coated. Glass, hardware, floors, roofs, and other adjacent areas and installations shall be protected by taping, drop cloths, or other suitable measures.

4. Coating applications method shall be as recommended by the coating manufacturer.

5. Allow each coat to cure or dry thoroughly, according to the coating manufacturer’s printed instructions, prior to recoating.

6. Vary color for each successive coat for coating systems when possible. When coating complex steel shapes, prior to overall coating system application, stripe coat welds, edges of structural steel shapes, metal cutouts, pits in steel surfaces, or rough surfaces with the prime coat. This involves applying a separate coat using brushes or rollers to ensure proper coverage. Stripe coat via spray application is not permitted.

B. Coating Properties – Mixing and Thinning

1. Coatings, when applied, shall provide a satisfactory film and smooth even surface. Glossy undercoats shall be lightly sanded to provide a surface suitable for the proper application and adhesion of subsequent coats. Coating materials shall be thoroughly stirred, strained, and kept at a uniform consistency during application. Coatings consisting of two or more components shall be mixed in accordance with the coating manufacturer’s instructions. Where necessary to suit the conditions of the surface, temperature, weather and method of application, the coating may be thinned as recommended by the coating manufacturer immediately prior to use. The VOC of the coating as applied shall comply with prevailing air pollution control regulations. Unless otherwise specified, coatings shall not be reduced more than necessary to obtain the proper application characteristics. Thinner shall be as recommended by the coating manufacturer.

2. Mixing of partial “kits” is strictly prohibited unless authorized in writing by the coating manufacturer and the City. This prohibition also applies to coatings

mixed for touchup or repairs. If authorized to mix partial kits, the contractor shall utilize containers with appropriate graduated markings/calibrated weight scales.

C. Environmental Conditions

1. Provide adequate heat, ventilation, and dehumidification to ensure that the coating manufacturer's environmental requirements are met and to ensure no loss of production days due to failure to meet coating manufacturer's environmental requirements.

2. Provide sufficient and continuous ventilation and air movement across coated substrates to remove volatile constituents (solvent) throughout the manufacturer's published curing period.

3. Air and surface temperatures: Prepare surfaces, apply and cure coatings within air and surface temperature range recommended by coating manufacturer.

4. Relative humidity: Prepare surfaces, apply and cure coatings within relative humidity range in accordance with coating manufacturer's instructions.

5. Dew Point: Do not apply coatings unless the temperature of the dew point is 5°F or greater than the temperature of the substrate.

6. Precipitation: Do not apply coatings in rain, snow, fog, or mist.

7. Wind: Do not spray apply coatings when the wind direction and velocity are such that overspray may result in property damage.

D. Protection of Coated Surfaces

1. Items which have been coated shall not be handled, worked on, or otherwise disturbed, until the coating is completely dry and hard. After delivery at the site, and upon permanent erection or installation, shop-coated metalwork shall be recoated or retouched with specified coating when it is necessary to maintain the integrity of the film.

E. Film Thickness and Continuity

1. WFT of the first coat of the coating system and subsequent coats shall be verified by the contractor, during application of each coat.

2. Coatings shall be applied to the minimum dry film thickness specified as indicated on the CDS. Dry film thickness shall be determined using the appropriate industry standard for the substrate (SSPC-PA 2, SSPC-PA 9, or ASTM D1400). Coatings determined to be above the maximum dry film thickness, as indicated herein or on the coating manufacturer's product data sheet, will be removed at the City's discretion.

3. The Inspector may, but is not required to, also measure coating thickness, at random locations, after each coat. SSPC –PA 2 (Level 1) is only to be used for the calibration of dry film thickness gauges. This is a minimum maximum dry film thickness specification. Dry film thickness readings will not be averaged. All inspection equipment shall be supplied by the Contractor. All equipment shall have current calibration certificates. The City reserves the right to use their own equipment at any time.

4. In testing for continuity of coating about welds, projections (such as bolts and nuts), and crevices, the City shall determine the minimum conductivity for smooth areas of like coating where the dry mil thickness has been accepted. This conductivity shall be the minimum required for these rough or irregular areas. Pinholes and holidays shall be recoated to the required coverage.

5. The ability to obtain specified film thickness is generally compromised when brush or roller application methods are used and, therefore, more coats may be needed to be applied to achieve the specified dry film thickness.

6. For concrete substrates, the Contractor shall apply a complete skim coat of the specified filler-surfacer material over the entire substrate prior to application of the coating system. This material shall be applied such that all open air voids and "bug holes" in the concrete substrate are completely filled prior to coating application.

F. Special Requirements

1. Before erection, the Contractor shall apply all but the final finish coat to interior surfaces of roof plates, roof rafters and supports, pipe hangers, piping in contact with hangers, and contact surfaces which are inaccessible after assembly. The final coat shall be applied after erection. Structural friction connections and high tensile bolts and nuts shall be coated after erection. Areas damaged during erection shall be hand-cleaned or power-tool cleaned and recoated with primer coat prior to the application of subsequent coats. Touch-up of surfaces shall be performed after installation. Surfaces to be coated shall be clean and dry at the time of application. Except for those to be filled with grout, the underside of equipment bases and supports that have not been galvanized shall be coated with at least two coats of intermediate coat specified for System 1 prior to setting the equipment in place. Provide coating system terminations at leading edges and transitions to other substrates in accordance with the coating manufacturer's recommendations or detail drawings.

G. Soluble Salt Contamination of Metal Substrates

1. Contractor shall test in accordance with SSPC Guide 15 metal substrates to be coated that have been exposed to sea water or coastal air or to industrial fallout of particulate or other sources of soluble chlorides (such as waste water exposure). If testing indicates chloride levels in excess of 25 ppm exist after the surface preparation has been completed. The Contractor shall reclean and prepare these surfaces until chloride levels are below 25 ppm.

3.07 EXCLUSIONS

A. Do not prepare or coat the following items or surfaces:

1. Mortar coated pipe and fittings

2. Sacrificial anodes and support wires

3. Copper, brass

4. Name Plates

5. Fiberglass items

B. Where surfaces specified as "not to be coated" are damaged, coated or otherwise do not comply with these Specifications, clean, repair or otherwise restore such surfaces to the satisfaction of the City, at no additional cost to the City.

3.08 INSPECTION AND TESTING

A. Perform inspection and testing as specified. Include additional inspection, sampling and testing work that the City may require to verify compliance with these Specifications.

B. Notify the City three (3) working days in advance of any field operations involving abrasive blast cleaning or coating applications.

C. Assistance to City

1. Coordinate work with the inspection, sampling and testing requirements of the City

2. Assist the City as required for the performance of duties.

3. Provide all lighting and scaffolding to enable the City to perform inspection and testing.

4. Provide the level of illumination and scaffolding locations for inspection purposes as directed by the City.

5. Furnish City with safety equipment and devices during abrasive blast cleaning, coating and painting operations. Provide a helmet with continuous fresh air supply for observation during cleaning operations and coating application.

D. The City will perform such tests as are required to help ensure compliance with all phases of the surface preparation, and application of the coating systems. Provide test equipment including, but not be limited to the following: SSPC surface preparation standards; surface profile test tape; micrometer; abrasive sieve test; ultraviolet lamp; sling psychrometer; mirror; certified thickness calibration plates; magnetic type dry film thickness gage; and a nondestructive holiday detector.

E. Inspection by the City does not relieve the Contractor of the responsibility of compliance with all the requirements of these specifications.

1. In cases of dispute concerning surface profiles, film thickness, film continuity (holidays), etc., the City’s measurements and tests shall be final. Abide by the City’s decisions and directives.

2. Correct deficiencies in the continuity of the coating, or painting film or in the dry film thickness by applying additional coats as required, at the sole expense of the Contractor.

F. The City will determine the degree and surface profile of the field blast cleaned surface per test method NACE RP0287. Perform additional blast cleaning over areas not conforming to the specified degree of surface preparation and surface profile.

G. Perform tests on surfaces of abrasively blast-cleaned steel to detect oil and other contaminants which might be deposited on surfaces as a result of abrasive blasting operations. This may include chemical tests or ultraviolet (black light) tests, as required.

H. Perform all mixing, thinning, application and holiday detection of coatings in the presence of the City.

I. The City may completely inspect each application of coating to determine thickness and integrity.

1. Each coating application will be checked and deficiencies marked.

2. After observing specified recoat time apply additional coating materials over areas not having the specified minimum dry film thickness and areas having any holidays or pinholes.

3. After correction of deficiencies, the City will re inspect those areas to determine the acceptability of the additional coating.

4. Each coating application must be one hundred (100) percent to the satisfaction of the City prior to proceeding with successive coating applications.

J. Dry Film Thickness Measurement

1. Use an approved magnetic type non destructive dry film thickness gauge.

2. Determine that the specified dry film thickness has been obtained.

3. Measure specified dry film thickness' above the peaks of the surface profile.

4. Perform as many dry film thickness measurements, as described in SSPC–PA2, as required to verify compliance with this specification. Use a Type II Constant Pressure Probe Dry Film Thickness Gauge.

K. Furnish calibrated inspection devices in good working condition for detection of holidays and measurement of dry film thickness.

1. Calibrate and operated per manufacturer's instructions.

2. Furnish U.S. Department of Commerce; National Bureau of Standards certified thickness calibrated plates to test the accuracy of dry film thickness gauges and certified instrumentation to test the accuracy of holiday detectors.

3. Keep dry film thickness gauges and holiday detectors available onsite at all times until final acceptance of the application.

L. City may elect to furnish inspection devices and render decisions based solely upon test results from these devices.

M. For coating film continuity detection tests on interior structure coated surfaces with 20 mils or less dry film thickness, use a nondestructive holiday detector.

1. Provide personnel to operate coating film continuity detection devices under the direction of the City.

2. Operate inspection devices per the manufacture’s recommendations in accordance with NACE SPO188.

3. Holiday test any tank lining or coatings that are to be used in immersion. The Contractor shall test all coated surfaces for pinholes (NACE SPO-188) and holidays after application of the final coat in accordance with the following:

    a. Perform test in presence of the City Coating Inspector.

    b. Perform test after coating has cured as recommended by the manufacturer.

    c. Use an appropriate detector, such as Elcometer #236 or as approved by the City representative.

N. Test the coating integrity of the interior surfaces below the overflow line.

1. Mark all pinholes and repair manufacturer's written recommendations, or as directed by the City; and then retest.

2. Holidays or other irregularities are not permitted in the completed coating system.

3. During the testing, keep the detecting blade in continuous contact with the coated surface.

4. Do not proceed with holiday detection until the completed coating system has been cured per the manufacturer's recommendations.

O. Upon completion of the epoxy application to the interior structure surfaces, retest for holidays those areas of the lower shell which may have been subjected to abrasive blast rebound from the floor, repaired as noted herein. Repair areas as required and retest.

P. Measure anchor profile for prepared surfaces using a non destructive instrument such as a Testex Press O Film System.

Q. The City will verify completion of the final cure of the interior lining using a solvent wipe test.

1. Solvent wipe test: Consists of rubbing a solvent saturated rag on the area to be tested per ASTM D5402, using solvent recommended by manufacturer.

2. If any coating material is removed or the surface being tested becomes tacky, the coating is not fully cured. Extend curing time and if required continue dehumidification until the coating is fully cured.

R. The City may suspend the work if the cleaning and coating operations of the Contractor are creating a localized condition detrimental to facility operation, personnel or adjacent property. In the event of an intermittent or emergency suspension of the work by the City, correct deficiencies immediately.

S. Prepare, sign, and submit to the City daily inspection reports.

T. Nonconformance Reports

1. When a nonconformance report is required, prepare, sign, and submit to the City within one working day from the time that it is written.

2. After confirming that all non-conforming work has been corrected and/or the coating work is in compliance with this specification, prepare and submit a conformance verification report shall be completed for the specific item or area.

3. This report must be signed by the Inspector.

3.09 FINAL CLEANUP

A. Leave all areas in a neat and presentable condition.

B. Remove rubbish, construction debris and waste, surplus construction materials, scaffolding, tools, equipment, and coating, and thinner containers, and excess coating, and thinners, and other objectionable materials.

C. Dispose of such materials away from the site of work and in conformance with all applicable codes, ordinances and regulations.

D. Remove coating spots upon adjacent surfaces.

E. Clean, repair or refinish all damage to surfaces resulting from the work.

3.10 WARRANTY INSPECTION

A. Conduct a warranty inspection of all coating and painting work between the period of eleventh (11th) month through eighteenth (18th) month following final acceptance of the Contract work.

B. The City will establish the date for the inspection and will notify the Contractor at least 30 days in advance. The City may, by written notice to the Contractor, reschedule the warranty inspection to another date within the eleventh through eighteenth month inspection period, or may cancel the warranty period altogether.

C. Attendance

1. Attend the warranty inspection.

2. Notifying directly involved parties of the date and time of the inspection.

3. The City suggests personnel present at the pre-construction conference be present at this inspection.

D. Preparation

1. The City will completely drain and hose clean sufficiently for inspection.

2. Provide (Contractor) suitable lighting, ventilation and scaffolding for the structure inspection.

3. Use SSPC – Guide 12 for Illumination, and provide a minimum of 200 candle foot illumination for inspection.

E. Inspect visually the entire interior and exterior coating systems to determine whether any repair work is necessary or if a more detailed inspection will be needed.

F. Inspection Report

1. The City will prepare and deliver to the Contractor an Inspection Report.

a. The report will cover the warranty inspection, setting forth the number and types of failures observed, the percentage of the surface area where

failure has occurred, and the names of the persons making the inspections.

b. Color photographs illustrating each type of failure will be included in the report.

c. A coating system failure is defined as any location where coatings have peeled off, bubbled, or cracked, and any location where rusting is evident.

d. Upon completion of inspection and receipt of Inspection Report, the City will establish a date for the Contractor to proceed with remedial work.

G. Commence repairs on the date established by the City and completed within one month (thirty days).

1. Repair all coating system failures.

a. Remove the deteriorated coating, clean the surface and recoat with the same coating system in strict accordance with the specification and manufacturer's recommendations, to the satisfaction of the City.

b. If the area of failure exceeds twenty five (25) percent of the area of a portion of the structures surface, then remove the entire coating system and recoat that surface. All costs for warranty inspection are the responsibility of the Contractor. Additional inspection and all costs for repair are the responsibility of the Contractor.

H. If the Contractor fails to complete the remedial work to the satisfaction of the City, the City may elect to perform the remedial work. The Contractor is liable for actual cost of all such remedial work, plus 20% for City’s administrative cost.

I. Perform final cleanup in accordance with this Section.

END OF SECTION

SECTION 10200
SAFETY AND SIGNAGE

PART 1 - GENERAL

1.01 SECTION INCLUDES

A. Informational and accident prevention signs.

B. Fire extinguishers.

C. Fire and security entry key lock box.

1.02 REFERENCED SECTIONS

A. The following Section is referenced in this Section

1. Section 01330 – Submittals

1.03 SUBMITTALS

A. Comply with Section 01330.

B. Product Data: Fully describe all items proposed for use.

C. Shop Drawings: Scaled drawings or photostats of custom-made signs, showing style and size of lettering and colors.

D. Samples: Manufacturer's standard color palette for selection.

1.04 QUALITY ASSURANCE

A. Regulatory Compliance

1. American with Disabilities Act (ADA)

2. California Building Code (CBC), Title 24, especially Chapters 11A, 11C and 11D

3. California Code of Regulations (CCR), Title 8, CAL/OSHA

4. Code of Federal Regulations (CFR), Title 29, Chapter XVII, Part 1910

a. Subpart E, Section 1910.37

b. Subpart J, Section 1910.145

5. Uniform Fire Code, with local amendments

6. National Fire Protection Association (NFPA)

B. Standards

1. Conform to American National Standards Institute (ANSI) Z535.

PART 2 - PRODUCTS

2.01 SIGNS

A. Emergency Eyewash and Shower Location Signs

1. Manufacturers: Seton; Brady; or equal.

2. Size: 10-inch H x 14-inch W

3. Sign Characteristics: Meet ANSI Z535 sign format for safety signs; signal word - white text on green background; text – black text on white background; safety symbol – green on white background.

4. Material: Aluminum.

5. Provide holes and ties for mounting sign to the emergency shower and eyewash station standpipe.

6. Schedule of Signs Required:

Quantity	Text	Location
1	EMERGENCY Safety Shower & Eyewash Station	At emergency shower and eyewash station

B. Fire Equipment Location Signs

1. Manufacturers: Seton; Brady; or equal.

2. Size: 4-inch W x 18-inch H

3. Sign Characteristics: Bright, fade-resistant red on white downward facing directional arrow on red field.

4. Material: Vinyl with adhesive back.

5. Schedule of Signs Required:

Quantity	Text	Location
One (1) for each fire extinguisher	FIRE EXTINGUISHER	On the wall above or next to each fire extinguisher

C. Caution Signs

1. Manufacturers: Seton; Brady; or equal.

2. Size: 14-inch W x 10-inch H.

3. Sign Characteristics: Conform to OSHA 1910.145(d)(4).

4. Material: Aluminum.

5. Provide eyelet holes at each corner for mounting.

6. Schedule of Signs Required:

Quantity	Text	Location
3	CAUTION THIS EQUIPMENT STARTS AUTOMATICALLY	Well Pump; Surface Wash Pump; and Filter
5	CAUTION NON-POTABLE WATER DO NOT DRINK	(7-inch H x 10-inch W) At lab sink, at each utility station, and at each hose bib

D. Danger Signs

1. Manufacturers: Seton; Brady; or equal.
2. Size: 14-inch W x 10-inch H, unless noted otherwise.
3. Sign Characteristics: Conform to OSHA 1910.145(d)(2).
4. Material: Aluminum.
5. Provide eyelet holes at each corner for mounting.
6. Schedule of Signs Required:

Quantity	Text	Location
4	DANGER HIGH VOLTAGE	At Switchgear and Motor Control Centers

E. Informational Signs

1. Manufacturers: Seton; Brady; or equal.
2. Size: 14-inch W x 10-inch H, unless noted otherwise.
3. Sign Characteristics: Conform to ANSI Z535 Standards.
4. Material: Aluminum.
5. Provide eyelet holes at each corner for mounting.
6. Schedule of Signs Required:

Quantity	Text	Location
1	NOTICE ELECTRICAL ROOM	On Electrical Room door
1	NOTICE CHEMICAL ROOM	On Chemical Room door
2	NOTICE AUTHORIZED PERSONNEL ONLY	At each entrance gate
2	WARNING IT IS A FEDERAL OFFENSE TO TAMPER WITH THIS FACILITY. VIOLATORS WILL BE PROSECUTED PER HR 3448.	At each entrance gate

F. NFPA Fire Hazards of Materials Signs

1. Manufacturers: Seton; Brady; or equal.
2. Sign Characteristics: 4-color background – blue, red, yellow, white; 7-1/2-inch by 7-1/2-inch; 3-inch black hazard numerals scheduled below; conform to NFPA No. 704, standard System for Identification of Hazards of Materials for Emergency Response.
3. Material: Semi-rigid plastic with adhesive back.

4. Schedule of Signs Required:

Quantity	Material	Health	Flammability	Reactivity	Symbol
1	Ammonium Sulfate	0	0	0	--
1	Ferric Chloride	2	0	1	--
1	Sodium Hypochlorite	3	0	0	OX

G. Chemical Signs

1. Manufacturers: Seton; Brady; or equal.

2. Sign Characteristics: Red text on white background. Text shall include chemical name, precautionary measures, signal word, statement of hazards, and antidote. Sign shall include NFPA No. 704, Standard System for the Identification of the Hazards of Materials for Emergency Response.

3. Material: Semi-rigid plastic with adhesive back.

4. Provide eyelet holes at each corner for mounting. Provide 3/4-inch-thick AB marine grade plywood backing, sealed edges, painted for mounting on CMU wall.

5. Schedule of Signs Required:

Quantity	Material
1	Ammonium Sulfate
1	Ferric Chloride
1	Sodium Hypochlorite

2.02 FIRE EXTINGUISHERS

A. Provide fire extinguishers as required by applicable codes and ordinances.

B. Fire extinguishers shall be 40-pound minimum, BC dry chemical type, with UL rating of 4A: 40BC.

C. Include mounting bracket for each fire extinguisher mounted on masonry wall.

PART 3 - EXECUTION

3.01 INSTALLATION

A. Signs

1. Install signs where directed by the Engineer.

2. Install signs after painting surfaces to receive signs.

3. Use fasteners as follow:

a. To concrete and masonry: 4.25-inch diameter expansion anchors.

b. To sheet metal (28 to 6 gauge): #10 sheet metal screws.

c. To dry wall: Adhesive backing tape.

d. To chain link fence: Wire ties at each corner.

e. To plywood backing boards: #10 wood screws.

4. To machinery: Fasteners as suitable. Where surface is unavailable for mounting sign, provide a permanent galvanized steel sign post set in concrete for mounting sign.

5. Follow manufacturer's written installation instructions.

6. Securely mount signs level, plumb, and true to plane positions.

B. Fire Extinguishers

1. Install in accordance with all applicable codes and ordinances including NFPA-10.

END OF SECTION

(THIS PAGE LEFT BLANK INTENTIONALLY)

SECTION 10520

FIRE PROTECTION

PART 1 - GENERAL

1.01 SECTION INCLUDES

A. Surface mounted wall bracket

B. Hand portable fire extinguishers

C. All attachments and accessories necessary to provide a complete installation

1.02 REFERENCED SECTIONS

A. The following Section is referenced in this section

1. Section 01330 – Submittals

1.03 SUBMITTALS

A. Comply with Section 01330.

B. Product Data: Material specifications, manufacturer's installation, and maintenance instructions.

1.04 PRODUCT HANDLING

A. Protection

1. Cabinets and extinguishers to be stored at the job site in a safe, dry place with all labels intact and legible at time of installation.

2. Use all means to protect fire protection equipment before, during, and after installation.

B. Replacements

1. In the event of damage, including water intrusion, immediately make all repairs and replacements necessary to the approval of the City and at no additional cost to the City.

1.05 QUALITY ASSURANCE

A. Comply with

1. All pertinent codes and regulations

2. Comply with the 2022 California Fire Code, Chapter 9, Section 906 for Ordinary Hazard locations.

3. Mounting Height: Comply with the 2022 California Building Code, Chapter 11-B for access requirements.

B. Manufacturer as approved by NFPA and State Fire Marshal.

C. Work to be performed only by workers thoroughly skilled and specially trained in the techniques of installing fire extinguishers and cabinets, and who are completely familiar with the published recommendations of the manufacturer of the material being used.

1.06 OPERATION AND MAINTENANCE MANUALS

A. Provide test, refill and recharge schedules, procedures and recertification requirements.

PART 2 - PRODUCTS

2.01 FIRE EXTINGUISHERS

A. Fire extinguishers for new building shall be from one manufacturer.

B. Manufacturer:

1. General #TCP-5LH, 2A-10B:C,

2. Amenex #500, 2A-10B:C,

3. Or approved equal

C. Wall brackets: Manufacturer's standard metal bracket. Fasteners shall be expansion anchors, concrete screws or adhesive anchors.

PART 3 - EXECUTION

3.01 SURFACE CONDITIONS

A. Coordination

1. Coordinate with all other trades as required to ensure proper and adequate installation of brackets in the locations shown.

B. Inspection

1. Verify, before installation of signs, that surfaces are ready to receive fire extinguishers.

3.02 INSTALLATION

A. Install fire extinguishing devices in full accordance with pertinent regulations and the manufacturer's recommendations.

B. Install extinguishers in locations indicated on the plans and in accordance with the California Fire Code.

C. Wall brackets shall be installed in concrete and masonry using expansion, concrete screws or adhesive anchors.

END OF SECTION

SECTION 11000
GENERAL REQUIREMENTS FOR EQUIPMENT

PART 1 - GENERAL

1.01 SECTION INCLUDES

A. General requirements applicable to mechanical equipment and systems.

B. Ensure mechanical equipment meets the requirements of this Section in addition to the specific requirements of the individual equipment specification Sections.

1.02 REFERENCED SECTIONS

A. The following Sections are referenced in this Section

1. Section 01330 – Submittals
2. Section 01610 – Seismic Anchorage and Bracing
3. Section 01782 – Operation and Maintenance Information
4. Section 01825 – Equipment and System Testing
5. Section 01999 – Reference Forms
6. Section 09960 – High Performance Coatings
7. Section 10200 – Safety and Signage
8. Section 15110 – Valves and Appurtenances
9. Section 16940 – Instrumentation

1.03 GENERAL REQUIREMENTS

A. Equipment shall be of new construction and comply with the following requirements:

1. Designed for all stresses that may occur during fabrication, transportation, erection, and during continuous or intermittent operations.
2. Adequately anchored, leveled, aligned, and ready for operation without binding or overloading of critical components or motors.
3. Installed with necessary appurtenances required for proper operation and installation in a neat and workmanlike manner.
4. Tested by factory trained service mechanics or engineers.

1.04 UNIT RESPONSIBILITY

A. Equipment systems shall be assembled as a unit by a single manufacturer responsible for the entire unit.

1. Responsibility extends to selecting components of the system to assure compatibility, proper operation, and compliance with specified performance requirements.
2. Unit responsibility does not relieve Contractor of responsibility to City for performance of the Work.

1.05 QUALITY ASSURANCE

A. Arrangement

1. The arrangement of equipment shown on the Drawings is based upon information available at the time of design and is not intended to show exact dimensions peculiar to a specific manufacturer.

2. Some features of the illustrated equipment installation may require revision to meet actual equipment installation requirements.

3. Structural supports, foundations, connected piping, and valves shown may have to be altered to accommodate the equipment provided. Additional payment will not be made for such revisions and alterations.

B. Balance: Fully assemble all rotating elements in motors, pumps, blowers and centrifugal compressors before performing static and dynamic balance. Where specified, submit balancing reports, demonstrating compliance with this requirement.

1.06 SUBMITTALS

A. Comply with Section 01330.

B. General: Provide separate submittals for each equipment item or group of related equipment items.

C. Equipment Anchorage: Submit anchor bolt sizing calculations.

D. Bearing Life Calculations: Submit bearing L-10 life calculations in accordance with AFBMA requirements.

1.07 OPERATION AND MAINTENANCE MANUALS

A. Furnish operation and maintenance manuals for each equipment system in accordance with the Section 01782 requirements.

1.08 PROTECTION DURING SHIPMENT

A. Shipping: Ship equipment in sealed, weather-tight, enclosed conveyances, and protected against damaging stresses during transport and handling.

B. Bearing Housings: Wrap or otherwise seal to prevent contamination by grit and dirt, and tape closed ventilation and other types of openings.

C. Repair any damaged materials to conform to the requirements of the Contract before the assembly is incorporated into the Work. The Contractor shall bear the costs arising out of dismantling, inspection, repair, and reassembly.

PART 2 - PRODUCTS

2.01 PIPING CONNECTIONS ON EQUIPMENT

A. Flanges on Equipment: Conform to dimensions and drilling specified in ANSI B16.1, Class 125 unless otherwise required by Division 15 pipe specifications or the Drawings.

B. Pipe Flanges: Conform to dimensions and drilling specified in AWWA C207, Class D, 125 lb flanges provided on connection pipe.

C. Threaded Flanges: Flat faced with standard taper pipe thread conforming to ANSI B1.20.1.

D. Pipe Threads: Conform in dimension and limits of size to ANSI B1.1, coarse thread series, Class 2 fit.

E. Flange Assembly Bolts and Nuts

1. Heavy pattern, hexagonal head, carbon steel machine bolts with heavy pattern, hot pressed, hexagonal nuts conforming to ANSI B18.2.1 and B18.2.2.

2. Threads: Unified Screw Threads, Standard Coarse Thread Series, Class 2A and 2B, ANSI B1.1.

2.02 BEARINGS

A. Service: Unless otherwise specified, equipment bearings shall be oil or grease lubricated, ball or roller type, designed to withstand the stresses of the service specified.

B. Rating

1. L-10 Rating Life: Minimum 50,000 hours unless otherwise specified. Determine rating life using the maximum equipment operating speed.

2. Determine rating in accordance with the latest revisions of AFBMA Methods of Evaluating Load Ratings of Ball and Roller Bearings.

3. Where individual equipment Sections specify higher bearing life ratings, those requirements supersede the minimum bearing life specified above.

C. Grease Lubricated Bearings

1. Fit with easily accessible grease supply, flush, drain and relief fittings, except those bearings specified to be factory sealed and lubricated.

2. Extend non-accessible grease fittings to an easily accessible location using 1/4-inch diameter stainless steel tubing as an extension tube.

3. Grease supply fittings: Standard hydraulic Alemite or Zerk type.

D. Oil Lubricated Bearings

1. Equip with either a pressure lubricating system or a separate oil reservoir type system.

2. Size oil lubrication systems to safely absorb the heat energy normally generated in the bearing under a maximum ambient temperature of 60°C.

3. Equip with a filler pipe and an external level indicator gage.

E. Incorporate bearing housings with sufficient cooling to maintain surface temperature at 65 degrees C or less for continuous operation at bearing rated load and a 50 degrees C ambient temperature, or install appropriate shielding on bearings that are accessible to touch.

F. Bearing Isolators

1. Provide for bearing where the shaft exits the bearing housing.

2. Motor Bearings: Provide Inpro/Seal style VBX vapor blocking isolators.

3. Gears: Provide Inpro/Seal “Double Runner” bearing isolator for shafts exiting the gear casing.

4. Pumps, Blowers and Compressors: Provide Inpro/Seal style VBX blocking bearing isolators where shafts exit casings/housings.

5. Pillow Block Bearings: Provide Inpro/Seal “Pop-In” style bearing isolators.

2.03 DRIVE COMPONENTS

A. V-Belt Drives

1. Design with sliding base or other suitable tension adjustment.

2. Design with service factor of at least 1.6 at maximum speed.

3. Statically balance sheaves. In addition, dynamically balance sheaves that will operate at peripheral speed of more than 5,500 feet per minute.

4. Belts: Provide anti-static belts when explosion-proof equipment or environment is specified.

B. Gear Reducers

1. Provide drives with nominal input horsepower rating equal to or greater than the nameplate horsepower of the drive motor.

2. Provide gear drives manufactured in accordance with AGMA Class II service requirements.

2.04 SHAFT COUPLINGS

A. Type and Rating: Non-lubricated, designed for a minimum of 50,000 hours operating life.

B. Equipment with a driver greater than 1/2 horsepower, and where the input shaft of a driven unit is directly connected to the output shaft of the driver, shall have its two shafts connected by a flexible coupling which can accommodate angular misalignment, parallel misalignment and end float, and which cushions shock loads and dampens torsional vibrations.

C. Provide couplings recommended by the coupling manufacturer for the specific application, considering horsepower, speed of rotation, and type of service.

D. Install couplings in conformance to the manufacturer's instructions.

2.05 GUARDS AND CAUTION SIGNS

A. Guards

1. Enclose exposed moving parts with guards that meet the requirements of federal and state OSHA requirements.

2. Enclose drive shafts to at least 7 feet above floors or operating platforms.

B. Materials

1. Fabricate guards of 14 gauge steel and expanded metal screen to provide visual inspection of moving parts without removal of the guard.

2. Galvanize after fabrication and paint with the equipment.

3. Fasteners: Type 304 stainless steel.

C. Warning Sign

1. Provide warning signs near equipment with moving parts that operate automatically or by remote control.

2. Provide warning signs with wording, size and colors specified in Section 10020.

2.06 PRESSURE TAPS, GAUGES, AND SWITCHES

A. Pressure Taps and Gauges: Unless otherwise indicated, provide on the discharge and suction sides of pumps, blowers, and compressors.

B. Pressure Gauges: See Section 15110.

C. Pressure Switches: Unless otherwise indicated, provide on the discharge side of pumps. See Section 16940 for pressure switch specifications.

2.07 NAMEPLATES AND LIFTING EYES

A. Nameplates

1. Provide on each item of equipment with the specified equipment name or abbreviation and equipment number.

2. Engrave or stamp (not painted) on stainless steel and fastened to the equipment in an accessible location with stainless steel screws or drive pins.

B. Lifting Eyes

1. Provide on equipment weighing over 80 lbs.

2.08 SPARE PARTS AND LUBRICANTS

A. Spare Parts: Provide for each item of mechanical, electrical, and instrumentation equipment a supply of spare parts and special tools required for the starting, testing, adjustments, and initial operation. Pack spare parts required by individual equipment specifications:

1. Pack spare parts with individual weights less than 50 pounds in a heavily constructed painted wood box with hinged cover and a locking clasp.

2. Provide a typed inventory of spare parts stapled to the underside of the cover.

3. Tag and wrap each part in a waterproof container. Spare bearings shall be encapsulated in an airtight plastic film.

B. Lubricants: Provide for each item of mechanical equipment of the type recommended by the equipment manufacturer a supply of the lubricant for startup, testing, and initial operation.

1. Provide a list showing the required lubricants for each item of mechanical equipment. List estimated quantity of lubricant needed for a full year's operation, assuming the equipment will operate continuously.

2. Lubricants shall be products of the City's current lubricant supplier.

3. Limit the various types of lubricants by consolidating them, with the equipment manufacturer's approval, into the least number of different types.

2.09 ANCHOR BOLTS

A. Size anchor bolts and concrete anchors for equipment in accordance with Section 01610.

2.10 FACTORY APPLIED COATINGS

A. Ship each item of equipment to the site of the work with a shop applied prime coating prepared in accordance with the requirements of Section 09960 and compatible with the finish coatings.

B. Finish Painting of Motors: Factory-apply finish coats using manufacturer's standard coating, unless otherwise specified in Section 09960.

2.11 SPECIAL TOOLS AND ACCESSORIES

A. Furnish with each piece of equipment all tools, instruments, or accessories of a special nature that are required to assemble, disassemble, maintain, or repair any item of equipment.

1. Tag and mark each piece indicating their service and the piece of equipment for which their use is intended.

2. Include a list and description or pictorial representation of all special tools required for a given piece of equipment for insertion into the equipment operation and maintenance manual.

2.12 FASTENERS AND DIELECTRIC ISOLATION

A. Fasteners for Aluminum: Stainless steel.

B. Isolate steel surfaces, other than stainless steel, from aluminum with stainless steel, neoprene, non-metallic washers or other acceptable material.

C. Dissimilar Metals: Protect from galvanic corrosion by means of pressure tapes, coatings, or isolators.

PART 3 - EXECUTION

3.01 INSTALLATION

A. Install, align and test each item of equipment within the tolerances recommended by the equipment manufacturer.

B. When specified in individual Sections, install and test equipment under the direction of installation engineers who have been factory trained by the equipment manufacturer.

C. Perform all work in accordance with manufacturer's recommendations.

3.02 QUALITY CONTROL

A. Test equipment in accordance with Section 01825 and the individual equipment Sections.

B. Furnish written certification from the equipment manufacturers that each item has been installed, aligned, and tested correctly and that the installation meets the manufacturer's requirements for efficient, trouble-free operation. Utilize Manufacturer’s Installation Certification Form provided in Section 01999.

C. Equipment manufacturer’s certification shall not be construed as relieving the Contractor of his overall responsibility for this portion of the work.

END OF SECTION

SECTION 11002

EQUIPMENT MOUNTING

PART 1 - GENERAL

1.01 SECTION INCLUDES

A. Equipment mounting requirements, including fabricated steel equipment bases, concrete equipment pads, supports, anchorage, and accessories.

1.02 REFERENCED SECTIONS

A. The following Sections are referenced in this Section

1. Section 01330 – Submittals
2. Section 01611 – Seismic Design Requirements
3. Section 05501 – Anchor Bolts
4. Section 09900 – Coating Systems

1.03 QUALITY ASSURANCE

A. Provide supports, anchorage, and equipment mounts that are sized and designed to resist the calculated forces and that are in accordance with the manufacturer's recommendations, the current California Building Code (CBC), and industry standards requirements.

1.04 DESIGN REQUIREMENTS

A. Design equipment mounts and anchorages to resist the minimum lateral force required by Section 01611 and the latest edition of the CBC.

B. Equipment anchor bolt sizes shown on the Drawings are the minimum required size.

C. Equipment anchorage design and calculations shall be prepared and signed by a civil or structural engineer currently registered in the state where equipment is installed.

1.05 MOUNTING REQUIREMENTS

A. Mount equipment and driver on a common fabricated steel baseplate with ample rigidity to support equipment and maintain shaft alignment without excessive deflection.

B. Mount equipment baseplates on concrete equipment pads.

1.06 SUBMITTALS

A. Comply with Section 01330.

B. Shop Drawings: Provide drawings of equipment bases and anchorage details.

C. Anchorage Calculations: Submit stamped and signed anchor bolt sizing calculations.

PART 2 - PRODUCTS

2.01 ANCHOR BOLTS AND CONCRETE ANCHORS

A. Provide anchor bolts and concrete anchors in accordance with Section 05501.

2.02 CONCRETE EQUIPMENT PADS

A. Construct concrete pedestals at least 6 inches wider and longer than the steel or cast base so that the distance between the anchor bolts and the edge of concrete is at least 3 inches.

B. Unless otherwise shown or specified, all conduits, piping connections, drains, etc. shall be enclosed by the concrete base.

C. Shape concrete pedestals to drain away from the base.

D. Allow concrete to cure 21 days or until the concrete has cured to 75 percent of its specified compressive strength before placing equipment on the concrete pedestal.

E. Do not start equipment placed on the concrete pedestal until the concrete has cured for 28 days or to 100 percent of its specified compressive strength.

2.03 STRUCTURAL STEEL EQUIPMENT BASES

A. Provide structural steel bases with thickened steel pads for doweling.

1. Fabricate equipment base using continuous welds to seal seams and contact edges between steel members.

2. Grind welds smooth.

B. Design equipment bases with perimeter steel beams, intermediate stiffeners and baseplate.

1. Provide perimeter steel beams with minimum depth equal to 1/10th of the longest dimension of the base.

2. Beam depth need not exceed 14 inches provided that the baseplate deflection is kept within acceptable limits to minimize misalignment, as determined by the manufacturer.

C. Provide grout holes for the bases of equipment where vibration isolation is not specified.

D. Provide minimum 1-inch thick steel mounting baseplate for equipment with drivers 20 horsepower and larger.

E. Shop-apply prime coat prepared in accordance with the requirements of Section 09900 and compatible with the finish coatings

PART 3 - EXECUTION

3.01 GENERAL

A. Connect piping to equipment with flexible connections and/or expansion joints such that the intended uses of these joints is maintained in the piping system.

B. Coordinate the location of electrical conduit and piping penetrations within the concrete pad and equipment base.

1. Stub-up penetrations on the same side of the equipment as required for connection to the equipment.

2. Locate equipment drains for proper drainage away from equipment.

3.02 EQUIPMENT MOUNTING

A. Mount equipment on equipment baseplates using stainless steel shims so that equipment and driver are level in both directions and mounted within machined areas on baseplate. Do not use wedges to obtain level and alignment.

B. Utilize templates for placement of anchor bolts prior to placing concrete for equipment pad.

C. Apply a non-seize or non-galling compound on the threads of anchor bolts and concrete anchors.

3.03 SHAFT ALIGNMENT

A. After the complete unit has been installed on the equipment pad and leveled, check the factory shaft alignment by disassembling coupling and measuring angular and parallel orientations.

B. Use reverse-indicator dial or laser type alignment equipment to align shafts to within the manufacturer's required tolerance. Allow for thermal expansion, spacer coupling length and other factors that affect proper shaft alignment.

3.04 GROUTING EQUIPMENT BASES

A. After alignment has been completed, tighten anchor bolts and grout between equipment base and equipment pad. Use non-shrink and non-ferrous grout no less than 7/8 inch and no more than 1-5/8 inches thick unless otherwise shown.

B. Allow 48 hours for grout to harden and then remove jacking screws. Re-check torque on anchor bolts and re-check shaft alignment, making corrections as necessary.

END OF SECTION

(THIS PAGE LEFT BLANK INTENTIONALLY)

SECTION 11060

ELECTRIC MOTORS

PART 1 - GENERAL

1.01 SECTION INCLUDES

A. Low-voltage alternating current induction motors, 250 horsepower or less.

B. This section does not specify medium voltage (over 600 volts) motors and specialty motors such as submersible motors, hoist motors, valve operator motors or torque rated motors.

C. Unless specified otherwise, require electric motors to be provided by the manufacturer of the driven equipment per Section 11000.

D. Unless specified otherwise in the particular equipment specifications, comply with these specifications.

1.02 REFERENCED SECTIONS

A. The following Sections are referenced in this Section

1. Section 01330 – Submittals
2. Section 01600 – Material and Equipment
3. Section 01782 – Operation and Maintenance Information
4. Section 01999 – Referenced Forms
5. Section 11000 – General Requirements for Equipment

1.03 QUALITY ASSURANCE

A. Unit Responsibility

1. Comply with Section 11000.
2. Unless otherwise specified, assign unit responsibility for motors to the individual manufacturers of the driven equipment.

B. Product Delivery, Storage, and Handling

1. Comply with Section 01600.

C. Basic Standards

1. Manufacture per UL 674, UL 1004, NEMA Standard MG 1, and the requirements specified.

1.04 ENVIRONMENTAL CONDITIONS

A. Refer to individual equipment sections and drawings for installation locations.

1.05 SUBMITTALS

A. Comply with Section 01330.

B. Include a copy of the contract document control diagrams and process and instrumentation diagrams, with addenda updates, that apply to the equipment in this section.

1. Mark to show specific changes necessary for the equipment proposed in the submittal.

2. If no changes are required, mark the drawing or drawings “No Changes Required”.

3. Failure to comply with this paragraph is sufficient cause to reject the entire submittal.

C. Include the following items:

1. Completed Motor Data Form (Section 01999).

2. For motors 100 horsepower and larger, a motor heating curve.

3. Motor outline, dimensions, and weight.

4. Manufacturer's descriptive information relative to motor features.

5. Where a winding over-temperature device is required, provide a response curve for the temperature device.

6. For all inverter duty motors, the motor manufacturer's certification that the motor is compatible with the adjustable frequency drive to be used with the motor as specified in this section.

7. Motor performance data showing motor full load current, efficiency, and power factor for the motor operating at 25, 50, 75, 100 and 125 percent of full load.

8. Operating and maintenance information specified in Section 01782.

9. Overhaul instructions for each motor 5 horsepower and above.

1.06 DESIGN REQUIREMENTS

A. NEMA “B” design, unless otherwise specified.

B. NEMA Class B temperature rise above 40 degrees C ambient.

1.07 WARRANTY

A. Provide two-year warranty from date of substantial completion unless manufacturer’s standard warranty is longer.

B. Complete the Extended Warranty Form in Section 01999.

PART 2 - PRODUCTS

2.01 MANUFACTURERS

A. General

1. The City and City believe the following candidate manufacturers are capable of producing equipment and/or products that will satisfy the requirements of this section.

2. Do not construe the preceding statement, as an endorsement of a particular manufacturer's products or that named manufacturers' standard equipment or products will comply with the requirements of this section.

3. The below listed manufacturer's motors generally meet the class and performance requirements of this specification when furnished with appropriate modifications and additional features as specified.

B. Horizontal Motors

1. Types 1 and 2 – Premium efficiency motors manufactured by General Electric Inc., Type KS; and Reliance Electric Co., Type XEX, or equal.

2. Type 3 – Premium efficiency explosionproof motors manufactured by General Electric Inc., Type KS, Class I, Group D; and Emerson US Motor, Type LCE, or equal.

C. Vertical Motors

1. Types 1 and 2 – Premium efficiency motors manufactured by General Electric Inc., Type KS; and Emerson US Motors, Type TUCE Corroduty, or equal.

2. Type 3 – Premium efficiency explosionproof motors manufactured by General Electric Inc., Type KS, Class I, Group D; and Emerson US Motors, Type LUCE, or equal.

D. Inverter Duty Motors

1. Baldor, Inverter Motor; General Electric, ASD; Reliance, RPM-AC (XT) and US Motors Varidyne Inverter Duty, or equal.

2.02 MATERIALS

A. Cast iron frames for motors 1/2 horsepower and larger. Steel frames for motors smaller than 1/2 horsepower. Aluminum frame motors will not be permitted.

B. Cast metal fan blades and shrouds.

C. Stainless steel hardware.

D. Nonhygroscopic leads.

2.03 NAMEPLATES

A. Material: Engraved or stamped stainless steel or brass.

B. Information: Include items listed in NEMA Standard MG 1, Paragraph 10.37, 10.38 or 20.60, as applicable.

C. For motors 1/2 horsepower and larger, indicate the ABMA L-10 rated life for the motor bearings.

D. For motors 2 horsepower and larger, list the nominal efficiency.

E. For explosionproof motors, indicate UL frame temperature limit code.

F. Permanently fasten to the motor frame and position for easy visible inspection.

2.04 MOTORS LESS THAN 1/2 HORSEPOWER

A. General

1. Type: Squirrel cage, single phase, capacitor start, induction run type.
2. The equipment manufacturer may provide normally supplied materials in lieu of those specified in Paragraph 2.02
3. For single phase motors provide Class B insulation.
4. Small fan motors may be split-phase or shaded-pole type.
5. Provide with copper windings.

B. Rating

1. 115 volts, single phase, 60 hertz.
2. Continuous-time rated per NEMA Standard MG 1, Paragraph 10.35.
3. Nonoverloading at all points of the equipment operation.

C. Enclosures

1. Comply with NEMA MG 1.
2. Unless otherwise specified, provide totally enclosed fan cooled or totally enclosed nonventilated enclosures.
3. Explosion Proof Motors
   a. Furnish with UL Label for Class I, Division 1, Group D hazardous locations.
   b. Provide an over temperature device in the enclosure to detect and automatically de-energize the motor if the enclosure surface temperature exceeds 260 degrees C.
   c. Mark nameplate with UL frame temperature limit code T2B.

2.05 MOTORS 1/2 HORSEPOWER THROUGH 250 HORSEPOWER

A. General

1. Type: Three phase, squirrel cage, full voltage start induction type.
2. Unless otherwise specified, provide a NEMA MG 1-1.16 design for the duty service imposed by the driven equipment such as frequent starting, intermittent overload, high inertia, mounting configuration, or service environment.

B. Rating

1. 460 volts, three phase, 60 Hz.
2. Continuous time rated per NEMA Standard MG 1, paragraph 10.40.
3. Unless specified otherwise, provide a service factor of 1.15, but size not to exceed the nameplate rating at any point on the operating curve (non-overloading) of the driven equipment.

C. Classifications

1. General:

   a. Comply with the requirements specified in the following paragraphs.

   b. Definition of terms: Per NEMA MG 1.

   c. Temperature rise: for all motor types, do not exceed that permitted by Note II, paragraph 12.42, NEMA MG 1. The insulation shall be nonhygroscopic.

2. Type 1 Motors:

   a. Drip-proof guarded enclosures

   b. Class F insulation and Class B temperature rise at the motor's nominal rating.

3. Type 2 Motors:

   a. Totally enclosed, fan cooled.

   b. Class F insulation and Class B temperature rise at the motor's nominal rating.

   c. Conform to IEEE 841.

   d. Coat all internal surfaces with an epoxy paint.

4. Type 3 Motors

   a. Explosion proof motors, UL listed per UL 674 for Class I, Group D hazardous atmospheres.

   b. Class F insulation.

   c. Conform to IEEE 841.

   d. Provide UL-approved breather/drain device in the motor drain hole.

   e. Provide a frame temperature thermostat which meets the UL frame temperature limit code T2B (260 degrees C). Include automatically reset, normally closed contact rated 2 amperes at 115 volts AC.

D. Thermal Protection

1. Unless specified otherwise, provide thermal protection as defined in NEMA MG 1-12.53.1, as follows:

Motor type	Thermal Protection	
	Type 2 - Thermostats	Type 1 - RTDs
Noninverter duty	50-150 HP	200-250 HP
Inverter duty	1-60 HP	75-250 HP

2. Provide thermal protection in each stator winding.

   a. Thermostats: Bimetallic switch type, self-resetting.

   b. Resistance temperature detectors (RTDs): 10-ohm copper type (two per phase).

   c. On larger frame sizes where the motor manufacturer does not offer copper type RTDs, provide 100-ohm platinum type (two per phase).

3. For explosion proof motors, provide the motor winding thermal protection as specified above in addition to the motor frame thermostat specified in Paragraph 2.05.c.4.e.

E. Inverter Duty Motors

1. Use with adjustable frequency controllers employing Pulse Width Modulation (PWM) technology.

2. Do not exceed NEMA MG 1, Class B, temperature rise when operating over the specified speed range on the specified load speed/torque characteristics required by the associated driven equipment

3. Provide certification from the motor manufacturer of compatibility with the adjustable frequency controller to be used with the motor.

4. Designed to operate over the speed or frequency range specified.

5. Insulation: Meet NEMA MG 1, Part 31 (1600 volt peak at a minimum of 0.1 microsecond rise time).

6. Provide with thermal protection as specified above.

7. Provide Grounding Unit

   a. Provide with a shaft grounding unit mounted on the fan housing with stub shaft extended from the motor shaft.

   b. Equip with two brushes, totally enclosed and sealed against environmental contamination.

   c. Exception: Grounding unit and brushes not required for vertical turbine pumps.

8. Totally Enclosed, Air-Over, Blower-Cooled (TEBC) Type

   a. Provide where specified or required by the specified application requirements.

   b. Blowers: Driven at constant speed by 460-volt, 3-phase motors meeting Type 2 requirements specified in Paragraph 2.04 C.3.

   c. Manufacture blower and ducting as an integral part of the main motor frame.

   d. Provide air intake filter.

   e. Construct scroll case of cast aluminum or iron, and fan wheel of Type 304 stainless steel.

9. Inverter duty motors may be NEMA MG1-1.16, design A.

F. Vertical Motors

1. Provide solid-shaft P-base type specifically designed for vertical installation.

2. Universal position motors are not acceptable.

3. Comply with Type 2, Type 3, and/or Inverter Duty Motor requirements as specified.

4. Thrust bearing rating: Demonstrate compatibility with the loads imposed by the driven equipment.

G. Minimum Nameplate Efficiency

1. Determine per IEEE 112B testing procedures, when operating on a sinusoidal power source.

2. Comply with the following:

Motor Horsepower	Motor Minimum Efficiency, percent			
	900 rpm	1200 rpm	1800 rpm	3600 rpm
1	72.0	82.5	83.0	84.0
1.5	75.5	84.0	85.0	84.0
2	81.5	85.5	82.5	82.5
3	86.5	88.5	89.5	87.5
5	87.5	89.5	89.5	89.1
7.5	88.5	91.0	91.7	90.2
10	89.5	91.1	91.7	91.0
15	89.8	91.7	92.4	91.7
20	90.2	91.7	93.0	91.7
25	91.0	92.4	93.5	92.0
30	91.0	93.0	93.6	92.4
40	91.7	93.6	94.1	93.0
50	92.4	93.6	94.1	93.0
60	93.0	93.9	94.5	93.6
75	93.0	94.5	95.0	94.1
100	93.6	94.5	95.4	94.5
125	94.5	94.5	95.4	94.9
150	94.5	95.4	95.8	95.0
200	94.5	95.4	95.8	95.4
250	94.5	95.4	95.8	95.4

H. Conduit Boxes

1. Type: Cast iron, split construction with threaded hubs.

2. Conform to IEEE 841.

3. Furnish at least one size larger than NEMA standard for the given motor size. Review Conduit and Wire Routing schedule and coordinate with Electrical Contractor for conduit and cable requirements.

4. Design to rotate in order to permit installation in any of four positions 90 degrees apart.

5. Furnish with petroleum-resistant gaskets at the base of the conduit box and between the halves of the conduit box.

6. Provide grounding lug located within the box for the ground connection.

7. Minimum length of pigtail leads:

   a. 12 inches for motors up to 50 horsepower.

   b. 16 inches for motors larger than 50 to 250 horsepower.

I. Bearings

1. Type: Oil or grease lubricated ball or angle contact roller bearings.

2. Rating: Minimum L-10 life of 100,000 hours per ABMA 9 or 11 at the ambient temperature specified.

3. Motor designs employing cartridge type bearings will not be accepted.

4. Fit with lubricant fill and drain or relief fittings.

J. Lifting Eyes

1. Fit motors weighing more than 50 pounds with at least one lifting eye.

K. Current Imbalance

1. Base upon the lowest value measured.

2. Do not exceed the values tabulated below when the motor is operating at any load within its service factor rating and is supplied by a balanced voltage system:

   a. Under 5 horsepower: 25 percent

   b. 5 horsepower and above: 10 percent

L. Space Heaters

1. Where specified, size and design to prevent condensation inside the motor enclosure after shutdown.

2. Type: Cartridge or flexible wraparound type.

3. Power Requirements: 120 volts, single phase, 60 Hz.

4. Mark the rating in watts and volts on the motor nameplate or on a second nameplate.

5. Bring terminals to a separate terminal block or to pigtails in the conduit box.

PART 3 - EXECUTION

3.01 TESTING

A. Perform winding insulation resistance and current imbalance testing as specified in Division 16.

B. Test for correct rotation during preoperational checkout.

END OF SECTION

SECTION 11342
SUBMERSIBLE WELL PUMP

PART 1 - GENERAL

1.01 SECTION INCLUDES

A. Product-lubricated submersible turbine pump, complete with electric motors, discharge elbow and all accessories and appurtenances as specified or shown on the Drawings and including all labor, superintendence, materials, power, water, tools, equipment and services required by the Contract Documents or required to complete the Work.

B. Designed for pumping well water.

C. All materials in contact with well water shall be lead-free and meet the requirements of California Code of Regulations Title 22 Chapter 16 Article 7 regarding direct and indirect additives.

1.02 REFERENCED SECTIONS

A. The following Sections are referenced in this Section

1. Section 01330 – Submittals
2. Section 01782 – Operation and Maintenance Information
3. Section 01820 – Training
4. Section 01825 – Equipment and System Testing
5. Section 01999 – Reference Forms
6. Section 05501 – Anchor Bolts and Anchoring Devices
7. Section 11000 – General Requirements for Equipment
8. Section 11060 – Electric Motors

1.03 QUALITY ASSURANCE

A. General

1. All components of the pumping unit must be supplied by and warranted by the pump manufacturer including bowls, impellers, column, shafting, discharge heads, couplings, seals, suction barrels (if applicable) and motors.

B. Unit Responsibility

1. Assign unit responsibility, as specified in Section 11000, to the pump equipment manufacturer for the equipment specified in this Section and other referenced sections.
2. Submit a certificate of Unit Responsibility (Section 01999).

C. ISO 9001 Quality System

1. Comply with ISO 9001 Quality System
2. Submit documentation of compliance prepared by independent certification agency approved by International Organization for Standardization.

3. Do not ship equipment before compliance documentation has been reviewed and approved.

D. Governing Standards

1. Conform to the applicable requirements of AWWA E-102 – Submersible Vertical Turbine Pumps, latest edition.

2. Conform to the applicable requirements of ANSI/HI 9.6.4, Rotodynamic Pumps for Vibration Analysis and Allowable Values, latest edition.

3. Testing: Conform to ANSI/HI 14.6 Rotodynamic Pumps for Hydraulic Performance Acceptance Tests, latest edition, Level 1U

E. Manufacturer:

1. Shall have supplied complete units that have been in successful operation, at similar installations, for at least ten (10) years.

2. Provide products of a single manufacturer who has been regularly engaged in the design and manufacture of the equipment.

F. Variable Frequency Drive Coordination

1. Contractor to verify that proposed pump and VFD are compatible.

1.04 DESIGN AND PERFORMANCE REQUIREMENTS

A. Install, test and adjust pumping equipment under the supervision of the manufacturer's representative. All costs for such supervision shall be paid for by the Contractor and included in the bid.

B. Bowl diameter shall allow for installation in the well casing as constructed.

1. Well casing at pump setting is nominal: 16-inches in diameter

2. Maximum bowl diameter: 12 inches

3. Minimum annular clearance between pump bowl and casing wall: 1 inch

C. The horsepower rating of the motors shall be sufficient to cover the full range of the pump curve from zero discharge to free discharge without motor overload.

D. Rotating mechanical equipment shall not exhibit critical speeds within the specified range of operating speeds. Critical speeds for the assembly of the pump/pump station unit shall be at least 20% greater than maximum operating speed or at least 20% below the minimum speed.

E. Design pumps to operate:

1. Continuously under the specified conditions without damage to pump or motor.

2. In a stable fashion and without cavitation over the full range of operating conditions.

3. With head/capacity curves which slope continuously with no flat areas or slope reversals which could cause operating problems in variable frequency drive applications.

4. At shutoff head for durations up to 30 seconds without overloading or damage.

5. Without encroaching on the motor's service factor at any point on the pump's speed/capacity curve.

F. Design the pumping unit to safely operate free of resonant frequency. Conform to the vibration requirements of ANSI/HI 9.6.4.

G. Comply with the following.

Design Requirements	
Number of Pumps	1
Minimum Pump Column Diameter, inches	8
Minimum Discharge Diameter, inches	6

H. Design pumps for long-term operation under the following environmental conditions:

Environmental Conditions	
Equipment Location	In Well
Pumped Fluid	Clear Water
Pumped Fluid Temperature	35-65 °F
Duty	Continuous
Suction Bowl Submergence	250 feet minimum
Site Elevation	41 feet
Well Artesian Pressure	19 psi

I. Performance Criteria

1. Comply with the following:

   a. The specified head includes static lift, distribution system pressure and friction headloss in piping external to the pump.

   b. Specified head does not include velocity head or hydraulic losses internal to the pump. The pump manufacturer shall calculate these losses and add them to the total head specified herein giving total dynamic head.

Performance Requirements	
Nominal pump speed, rpm:	3540
Condition A[(a)]	
Capacity, gpm	400
Total head, feet	422
Min. Efficiency, %	70
Condition B[(b)]	
Capacity, gpm	200
Total head, feet	520

Performance Requirements	
Condition C[(c)]	
Total Head, feet	600

(a) Condition A: The rated, continuous-duty operating performance, guaranteed in accordance with Hydraulic Institute Acceptance Level 1U.
(b) Condition B is provided to indicate the general shape of the pump curve.
(c) Condition C is Shut Off Head.

2. Select pumps such that the primary design point (Condition A) is greater than 95 % of the pump best efficiency point flow, and less than 105% of the pump best efficiency point flow.

1.05 SUBMITTALS

A. Comply with Section 01330.

B. Include a copy of the contract document control diagrams and process and instrumentation diagrams, with addenda updates, that apply to the equipment in this Section.

1. Mark to show specific changes necessary for the equipment proposed in the submittal.

2. If no changes are required, mark the drawing or drawings “No Changes Required”.

3. Failure to comply with this paragraph is sufficient cause to reject the entire submittal.

C. Include the following items

1. Complete scope of supply indicating all components to be furnished.

2. Materials of construction

3. Performance data curves showing head, capacity, horsepower demand, NPSH required, recommended NPSH margin, and pump efficiency over the entire operating range of the pump.

a. Indicate separately:

1) The minimum submergence required at the rated flow condition and at the maximum and minimum flow conditions.

2) Head

3) Capacity

4) Horsepower demand

5) Pump efficiency

6) Manufacturer’s recommended maximum and minimum flow conditions

b. Submit performance curves at intervals of 100 rpm from minimum speed to maximum speed for each pump equipped with a variable speed drive.

4. Fully dimensioned assembly and installation drawings including shaft size, seal, coupling, bearings, anchor bolt plan, part nomenclature, material list, outline dimensions, and shipping weights.

5. On shop drawings or elsewhere indicate:
    a. Pump model and size
    b. Design rotation speed
    c. Number of stages
    d. Type of bowl bearings
    e. Type of line shaft bearings
    f. Shaft size
    g. Pump column size
    h. Discharge size
    i. Outside diameter of pump bowls
6. Vibration analysis stamped and signed by a licensed professional engineer demonstrating that the critical speeds of the discharge head assembly and of the shaft are either 20 percent above the maximum speed, or 20 percent below the minimum speed.
7. Anchor bolt design calculations and details signed by a California-registered Civil or Structural Engineer, and additional anchorage information specified in Section 05501.
8. Electric motor information specified in Paragraph 2.05 of this section.
9. Submit a Motor Data Form (Section 01999)
10. Wiring diagram
11. Coating information
12. ISO 9001 Certification
13. Documentation that all materials in contact with the potable water, well water to be treated to potable water, or liquids (e.g., chemicals) to be added to the process/potable water shall be lead-free and shall meet the requirements of California Code of Regulations Title 22 Chapter 16 Article 7 regarding direct and indirect additives.
14. Unit Responsibility Form (Section 01999)
15. Manufacturer's standard warranty

D. Deferred Submittals:
1. Submit operating and maintenance (O&M) information as specified in Section 01782 a minimum of 10 days before equipment shipment.
2. Submit factory test reports as specified under "Source Quality Control" a minimum of 10 days prior to equipment shipment and receive approval prior to equipment shipment. Include factory test reports in final O&M manual.
3. Submit forms required following startup and training. Include forms in final O&M manual. Refer to Part 3 below.
4. Submit Manufacturer's Installation Certification Form (Section 01999).

PART 2 - PRODUCTS

2.01 MANUFACTURERS

A. One of the following:

1. Weir-Floway Inc.
2. Goulds
3. Flowserve
4. National Pump Company
5. or equal as specified in Section 01330

B. Modify as necessary to meet the requirements of this section.

2.02 PUMP CONSTRUCTION

A. Shaft diameter: Not less than the minimum permitted by AWWA E102 for the applicable driver nameplate horsepower rating.

B. Shafts shall have a first critical speed not less than 20% above maximum operating speed.

C. Excessive vibration shall be sufficient cause for rejection of the equipment.

D. The mass of the unit and its distribution shall be such that resonance at normal operating speeds is avoided.

E. All rotating parts shall be accurately machined and shall be in as nearly perfect rotational balance as practicable.

F. Provide type 316 stainless steel nuts and bolts on entire pumping unit.

2.03 MATERIALS OF CONSTRUCTION

A. Pump Bowls: Cast-Iron, ASTM A48, Class 30, or 316 stainless steel

B. Impellers: Zincless bronze, Alloy 936, or 316 stainless steel

C. Pump Shaft: Stainless Steel, Type 416 or 431, ASTM 582

D. Pump Motor Couplings: ASTM A276, 416 Stainless Steel

E. Column Pipe: ASTM A53, Grade B, Schedule 40 Steel Pipe with ANSI B1.20.1 standard tapered pipe threads

F. Column Pipe Couplings: ASTM A108 steel, Grade 1020

G. Suction Strainer: Stainless Steel, AISI Type 316

H. Anchor Bolts: ASTM A276 Type 316 Stainless Steel

I. All Hardware and Fasteners: Type 316 Stainless Steel

J. Discharge Elbow: Fabricated Steel

2.04 EQUIPMENT FEATURES

A. Bowl Assembly:

1. Each bowl assembly shall consist of the bowl, impeller and bowl shaft, and bearings.
    a. Bearings shall be located above and below the impeller.
    b. Bowls shall be free from blow holes, sand holes, and all other faults; accurately machined and fitted to close dimensional tolerance.
    c. For cast iron bowl assemblies only, passages through the bowl shall be polished and porcelain-lined.
    d. The inner surfaces of the inlet shall be smooth and free of sharp projections or cavities that might cause turbulence or cavitation.
2. Impellers shall be constructed free from projections, cavities, or abrupt transitions.
    a. Impeller surfaces shall be polished, accurately machined and finished, and mechanically and dynamically balanced.
    b. The impellers shall be statically and dynamically balanced.
    c. One piece, free of cracks and porosity. Each impeller free of sharp projections, cavities, or abrupt transitions that could incite cavitation or excessive turbulence.
3. The impellers shall be of the enclosed type and shall be of heavy construction, accurately fitted, statically and dynamically balanced.
4. The bowl shaft shall be supported by bearings located on both sides of each impeller.
5. Construct such that the reed critical frequency of the discharge head and motor assembly is a minimum of 20% above the maximum pump speed, or 20% below the minimum pump speed.
6. Provide a stainless steel nameplate attached to the discharge head containing the following information at a minimum:
    a. Pump model number
    b. Design flow
    c. Design head
    d. Horsepower
    e. Speed
    f. Number of stages
    g. Serial number

2.05 MOTORS

A. The motor shall be designed for continuous operation while completely submerged.

B. Motors shall be rated 460 volts, three phase, 60 Hz, and shall be continuous time rated in accordance with NEMA Standard MG 1, paragraph 10.40. Unless specified otherwise, motors shall have a service factor of 1.15, but shall not be required to exceed their nameplate rating at any point on the operating curve (non-overloading) of the driven equipment. Motor shall be compatible with variable frequency drive (VFD) operations.

C. Winding insulation resistance and current imbalance testing shall be performed. If the motor is not shop tested with the pump, certified motor efficiency data shall be furnished to the pump supplier based on tests conducted on the motor or an identical motor.

D. Motor nameplates shall be engraved or stamped stainless steel or brass. Information shall include those items enumerated in NEMA Standard MG 1, paragraph 10.37, 10.38 or 20.60, as applicable.

E. Provide with a nonreversible ratchet device to prevent backspin of the pump.

2.06 DISCHARGE HEAD

A. The discharge head consists of a discharge elbow and sole plate, plus nipples, couplings, and appurtenances as described below and as shown on the Drawings.

B. The discharge elbow shall incorporate a 6-inch diameter long-radius elbow welded securely to an ANSI Class 150 16-inch flange and shall rigidly support the total weight of the motor, bowl assembly, discharge pipe, cable, and column of water. Provide weld structural calculations with pump submittals.

C. Discharge head shall include I-bolts or lifting lugs to facilitate removal, as shown on Drawings.

D. Discharge head shall include one 1-inch diameter threaded full coupling for manual well sounding, one 2-1/2-inch rigid electrical conduit nipple for pump power cable, and one 1-1/2-inch rigid electrical conduit nipple for pump control wires as shown on the Drawings. Provide threaded caps or plugs for nipples and couplings.

E. Provide a separate steel sole (sub-base) plate manufactured expressly for the discharge elbow provided. Sole plate shall be of A36 fabricated steel. Minimum thickness 2 inches.

2.07 SEALED GLAND FITTINGS

A. Provide sealed gland fittings on the discharge head and existing 2-inch sounding tube to allow passage of the power, motor fault, and level sensor conductors while retaining the well internal artesian water pressure.

1. For power cable, fitting shall be OZ Gedney, type CSBI, part number CSBG-250 P-1, with holes sized for the 4 individual insulated conductors. Fittings shall fit on the 2-1/2-inch Rigid Conduit Nipple on the well discharge head.

2. For motor fault signal, fitting shall be OZ Gedney, type CSBI, part number CSBG-150 P-1, with holes sized for the individual insulated conductors. Fittings shall fit on the 1-1/2-inch Rigid Conduit Nipple on the well discharge head plate.

3. For level transducer (mounted on existing 2-inch well sounding tube east of sole plate) fitting shall be OZ Gedney, type CSBG, part number CSBG-200P-1, with holes sized for the 1 individual insulated conductors. Fittings shall fit on the 2-inch well sounding pipe east of the well seal plate.

2.08 COLUMN PIPE

A. The total length of the column pipe shall allow pump setting at depth specified.

B. The column pipe shall be schedule 40 steel, not less than 8-inches in diameter. Discharge pipe joints shall be threaded in 21-foot maximum lengths. Provide swaged reducer nipple as needed to match pump discharge diameter.

C. Top and bottom sections of discharge pipe shall not exceed 5 feet in length.

2.09 IN-LINE CHECK VALVES

A. Provide two (2) in-line check valves: one at pump discharge and one approximately 125 feet below top of casing as shown on Drawings.

B. In-line check valves shall be 8-inch diameter, Flomatic Model 80DIX with break off plug, or approved equal.

C. If submersible pump is provided with a check valve on the discharge, only the additional in-line check valve at 125 feet is required.

2.10 SUBMERSIBLE CABLE

A. Pump cable shall be sized to limit the voltage drop to no more than 5%. The cable shall have three separate insulated conductors plus an insulated ground wire and shall be included in a single continuous flat jacketed assembly.

B. The insulation shall be water and oil resistant, and suitable for continuous immersion.

C. The cable shall be the length of the discharge pipe plus 15 feet to extend from the surface plate to the terminal box. Cable splices inside the well casing shall not be allowed.

D. The cable shall be adequately secured to the discharge pipe by stainless steel cable clamps, at 10-foot intervals. Cable shall be protected from cutting by stainless steel clamps by wrapping with fabric reinforced rubber sheeting or other material satisfactory to the Engineer.

E. Pump cable shall be minimum 4/0 copper wire construction, with 75-degree C insulation, Type THW, 600 volt rated.

F. Approved manufacturers include Regency Wire, Service Wire Co, Centralift, Paige Electric.

2.11 DATA PLATES

A. Mount a data plate on each pump unit.

B. Data plates shall contain the manufacture’s name, pump size and type, serial number speed, impeller diameter, capacity and head rating, and other pertinent data.

2.12 APPURTENANCES

A. Provide two, 1-inch nominal perforated PVC Schedule 40 sounding tubes from the well seal plate coupling connections to the top of the pump bowl assembly.

B. Attach the PVC sounding tubes to the column pipe at 10-foot intervals by taping with 10-mil PVC underwater tape. Strapping via stainless steel clamps along with the electrical drop cable shall not be allowed.

2.13 ACCESSORIES

A. Anchor Bolts

1. Comply with Section 05501

2. Submit calculations stamped and signed by a California-registered Civil or Structural Engineer.

3. Minimum diameter: 1-inch.

4. Type 316 stainless steel

B. Spare Parts:

1. Provide the following spare parts for each model of pump supplied, packed and labeled for warehouse storage:

a. (1) Full set of manufacturer's special tools necessary for the replacement of parts and adjustment of equipment.

b. (1) suction case bearing set.

c. (1) set of bowl and discharge case bearings.

d. (1) set of line shaft bearings.

e. (2) complete mechanical seals

f. (2) sets of all gaskets and O-rings.

2. Furnish spare parts and lubricants per Section 11000.

2.14 SOURCE QUALITY CONTROL

A. Factory assemble each pump.

B. Performance Testing

1. Conduct factory performance testing to demonstrate compliance with this Section and submitted performance curves.

2. Notify City one week before test to permit Construction Manager to witness test, at City's discretion.

3. Conduct testing per Hydraulic Institute Level "1U" standards.

a. Test each pump.

b. Plot curves of head, input horsepower, and efficiency against flow from shutoff to 150 percent of rated flow.

c. Take a minimum of six points, including shutoff, for each test run.

d. Take one of the six points as near to the rated condition as possible.

e. For pumps in variable speed applications, plot curves at 100 rpm intervals from minimum speed to maximum speed.

4. Summarize results in a written report, stamped and signed by a registered Professional Engineer.

a. Include copies of the testing log originals.

b. Include curves showing pump total head, driver input and output horsepower, pump efficiency, and rpm, plotted against capacity.

c. Include calculated field performance curves, based on shop tests and corrected for head losses in all portions of the pump column and for shaft bearing losses not included in the shop tests.

d. If the pump cannot be tested at the rated speed, include performance charts with both test and calculated speed curves.

C. Discharge Head

1. Test the discharge head to 200 psi or 150% of shutoff head, whichever is greater. Maintain test pressure for a minimum of five minutes.

PART 3 - EXECUTION

3.01 INSTALLATION

A. Install, align and connect pump in strict conformance with manufacturer's installation instructions. Set impeller clearances, lubricate, and perform all adjustments and other tasks specified by the manufacturer.

B. Anchor bolts: Place accurately using equipment templates.

C. Leveling

1. The sole plate shall be shimmed using steel wedges until the eccentricity of the headshaft to the discharge head is within 0.002 inch.

2. Steel wedge taper shall be less than 1/4-inch per foot. Double-wedges shall be used to provide a parallel bearing surface. The Contractor and manufacturer's representative shall accomplish wedging so that the sole plate is not sprung out of place.

3. The sole plate final location and alignment shall be carefully maintained, and the discharge head lifted, to provide access to the joint between the well casing and the sole plate.

4. This joint shall be sealed by a 3/8-inch thick angle ring around the casing, which is continuously seal welded to the casing and the sole plate.

5. Welding shall meet applicable standards of the AWS and form an air tight seal at the joint between the well casing and sole plate.

6. The sole plate shall be secured to the concrete pedestal with cast-in-place anchor bolts. Anchor bolt size shall be as recommended by the manufacturer, but not less than 1-inch in diameter. The space between the sole plate and the concrete pedestal shall be grouted with a non-shrink grout. Remove wedges after grout has set and fill voids with grout.

7. Install the discharge head on the sole plate with a flat gasket seal.

8. Connect discharge piping without imposing strain on pump flanges.

3.02 FIELD QUALITY CONTROL

A. Perform field quality control and inspections as recommended by the manufacturer.

B. Corrective Actions: Replace or repair work to eliminate defects, deficiencies and irregularities.

3.03 FIELD TESTS

A. General

1. Comply with Section 01825.

2. Conduct field performance tests to demonstrate that pump operation and controls meet the specified requirements.

3. Test complete pump assemblies for correct rotation, proper alignment and connection, and quiet operation.

3.04 MANUFACTURER'S FIELD SERVICES

A. Provide field inspection and instruction services by a factory-trained service technician or factory-trained authorized agent of the manufacturer. Sales representatives without factory training are not acceptable.

B. Provide minimum 2 visits of 8 hours each, excluding travel time, to witness the following; to perform field adjustments to ensure that the equipment installation and operation comply with the specified requirements; and to certify in writing that the equipment and controls have been properly installed, aligned, lubricated, adjusted, and readied for operation.

1. Installation of the equipment

2. Inspection, checking and adjusting the equipment

3. Startup and field testing for proper operation

C. Provide minimum 2 visits of 4 hours, excluding travel time, to train operation and maintenance staff on two different shifts. Comply with Section 01820.

D. Complete and submit the following forms:

1. Manufacturer's Installation Certification (Section 01999)

2. Training Certification Form (Section 01999)

END OF SECTION

SECTION 11364

CENTRIFUGAL WATER PUMP

PART 1 - GENERAL

1.01 SECTION INCLUDES

A. Provide a complete, tested, and operating centrifugal pump as shown on the Drawings and specified herein.

1.02 REFERENCED SECTIONS

A. The following Sections are referenced in this Section

1. Section 01330 – Submittals
2. Section 01611 – Seismic Design Requirements
3. Section 01825 – Equipment and System Testing
4. Section 01999 – Reference Forms
5. Section 09960 – High Performance Coatings
6. Section 11060 – Electric Motors
7. Section 13224 – Pressure Filter
8. Section 15110 – Valves and Appurtenances

1.03 SUBMITTALS

A. Comply with Section 01330.

B. Submit the following as a single complete initial submittal:

1. Product data demonstrating that the equipment conforms to the Specifications.
2. Pump performance curve.
3. Pump layout and dimensions.
4. Motor data.
5. Seismic anchorage calculations and related drawings.

C. Seismic Certification: Submit certification from the manufacturer that the equipment is capable of resisting seismic loads. Loading shall be as described in Section 01611.

D. Performance Testing: Submit certified non-witnessed factory performance test results in accordance with the Hydraulics Institute. Receive favorable review of test results prior to shipping the equipment

E. Manuals: Furnish manufacturer's installation, lubrication, operation and maintenance manuals, bulletins, and spare parts lists.

F. Submit Manufacturer’s Installation Certification Form from the manufacturer stating that the equipment has been properly installed, adjusted, and tested and is ready for full-time operation (Section 01999).

1.04 PERFORMANCE AND DESIGN REQUIREMENTS

A. Pump performance shall be as specified:

1. Quantity: One (1) pump.

2. Type: Single Stage – End Suction

3. Primary Point: 157 gpm at 70 feet TDH or as needed for filter surface wash - to be determined by the Filter System Supplier. See Section 13224.

4. Maximum Motor Speed: 1800 RPM.

5. Motor Horsepower: Assumed to be 5 HP, to be determined by the Filter System Supplier.

6. Motor Drive: Fixed Speed.

7. Minimum Suction x Discharge Size: 2.5-inch x 2-inch

8. Minimum Guaranteed Efficiency at Primary Point: 60%.

B. Pump shall operate without excessive noise or vibration over its full operating range. Vibration shall meet Hydraulic Institute Standards.

C. Actual tested horsepower of the pump with the final impeller trim shall not exceed the motor nameplate horsepower at any point on the pump curve.

1.05 QUALITY ASSURANCE

A. Equipment furnished under this Section shall be supplied by a single manufacturer who has been regularly engaged in the design and manufacture of the equipment for at least five years.

B. Demonstrate to the satisfaction of the Engineer that the quality to equipment made by those manufacturers named herein.

PART 2 - PRODUCTS

2.01 MANUFACTURERS

A. Aurora; Goulds; or equal.

2.02 PUMP

A. Pump Assembly: Single Stage End Suction pump shall be horizontally mounted with mechanical seals. Casing shall be end suction and arranged for back pullout. Disassembly shall not require disturbing either suction or discharge piping connections or connections to motor. Suction and discharge piping connections shall be flanged. Mount each pump and motor on a formed steel support base. Connect pump and motor with a heavy-duty flexible coupling complete with galvanized steel shaft/coupling guard.

B. Materials

1. Casing: Close-grained high tensile strength cast iron.

2. Impeller: Bronze, ASTM B-62.

3. Shaft: High tensile strength steel.

4. Shaft sleeve: Bronze.

5. Wear rings: Renewable, bronze.

C. Impeller: Enclosed type, statically and dynamically balanced. Secure against rotation on the shaft by means of a key. The first critical shaft speed shall be at least 125% of full operating speed.

D. Bearings: Oversized, heavy-duty, grease lubricated ball-bearing or roller bearing type. Split Case pumps shall have an AFBMA minimum B-10 life of 50,000 hours. End Suction pumps shall have an AFBMA minimum B-10 life of 20,000 hours.

E. Pump Seal: Pumps shall have single mechanical shaft seals with ceramic or Ni-Resist stationary seat, carbon washer, BUNA elastomer, and stainless steel housing parts and springs. Provide a copper tubing flush water line from a connection at the top of the casing to each seal. At a high point in the line, provide a tee for venting with a bronze valve.

F. Motor: Provide motors for suitable for operation at 480 volts and conforming to requirements of Section 11060. Nameplate motor horsepower shall not be exceeded at any flow up through the maximum operating point of the pump.

2.03 ACCESSORIES

A. Provide suction and discharge pressure gauges for each pump with features and accessories in accordance with Section 15110.

2.04 FINISHES

A. Apply manufacturer’s standard factory paint finish.

PART 3 - EXECUTION

3.01 INSTALLATION

A. Install the pump unit(s) in strict conformance with manufacturer's installation instructions. Check pump and motor alignment according to the Standards of the Hydraulic Institute after complete unit has been installed at the site.

3.02 PAINTING

A. Apply a final color coat of paint to the pump units(s) in accordance with Section 09960.

3.03 FIELD SERVICE

A. The equipment manufacturer shall supply a competent field service engineer to thoroughly check and inspect the equipment after installation, place the equipment in operation, make necessary adjustments, calibrate instruments, and conduct field tests.

3.04 FIELD TESTING

A. All pumps shall be field tested and will be witnessed by the Engineer. For further requirements on tests, refer to Section 01825. Prior to performing pumping tests, the following tests shall have been satisfactorily completed.

1. Piping leakage tests.

2. Valve control and operation.

3. Pump seal water systems (if applicable).

4. Electrical testing of circuits, controls, and conductors.

B. Perform field testing in accordance with Equipment Startup and Adjustment as required in Section 01825.

END OF SECTION

SECTION 11380
CHEMICAL FEED EQUIPMENT

PART 1 - GENERAL

1.01 SECTION INCLUDES

A. Provide complete, tested, and operating chemical transfer pumps and metering pumps for the sodium hypochlorite, ferric chloride, and ammonium sulfate systems, as shown on the Drawings and specified herein.

B. Equipment List

1. Sodium Hypochlorite Transfer Pump: P410
2. Sodium Hypochlorite Metering Pump No. 1: P411
3. Sodium Hypochlorite Metering Pump No. 2: P412
4. Ferric Chloride Transfer Pump: P420
5. Ferric Chloride Metering Pump No. 1: P421
6. Ferric Chloride Metering Pump No. 2: P422
7. Ammonium Sulfate Transfer Pump: P430
8. Ammonium Sulfate Metering Pump No. 1: P431
9. Ammonium Sulfate Metering Pump No. 2: P432

1.02 REFERENCED SECTIONS

A. The following Sections are referenced in this Section

1. Section 01330 – Submittals
2. Section 01610 – Seismic Anchoring and Bracing
3. Section 01611 – Seismic Design Requirements
4. Section 01820 – Training
5. Section 01999 – Reference Forms
6. Section 09960 – High Performance Coatings
7. Section 10200 – Safety and Signage
8. Section 11060 – Electric Motors
9. Section 13216 – Chemical Storage Tanks
10. Section 16010 – Electrical

1.03 SUBMITTALS

A. Comply with Section 01330.

B. Submit the following items:

1. Shop Drawings and Product Data

   a. Product data to demonstrate that the equipment and accessories conforms to the Specifications.

   b. Pump layout with dimensions and connection sizes, location, and details.

   c. Pump performance data.

   d. Materials of construction.

   e. Motor data, as required in Section 11060.

   f. Electrical wiring and connection diagrams.

2. Seismic Calculations and Certifications

   a. Anchorage calculations for the equipment meeting requirements in Section 01610.

   b. Seismic certification for all equipment, certifying that the equipment is designed to resist any internal loading based on the loading requirements in Section 01611.

3. Manuals

   a. Furnish manufacturer's installation, lubrication, operation, and maintenance manuals, bulletins, and spare parts list for each system.

4. Material Safety Data Sheets (MSDS) for each chemical used during testing of each chemical feed system.

5. Completed Manufacturer's Installation Certification Form for each piece of equipment (Section 01999).

1.04 DESIGN REQUIREMENTS

A. All components and equipment shall be suitable for the following bulk (as delivered) chemicals in the specified (approximate) percentage by weight of solution:

Chemical	Concentration	Specific Gravity
Sodium Hypochlorite	12.5%	1.20
Ferric Chloride	40%	1.40
Ammonium Sulfate	39%	1.22

B. Wetted components shall be compatible with the pumped chemical.

C. Equipment and installation shall comply with the seismic requirements in Sections 01610 and 01611.

1.05 QUALITY ASSURANCE

A. All products furnished under this section shall be from a single manufacturer who has been regularly engaged in the manufacture of the pumps specified for at least five years. Demonstrate to the satisfaction of the Engineer that the quality is equal to equipment made by the manufacturers named herein.

B. Comply with the following regulatory standards:

1. Uniform Fire Code, especially Article 80, Hazardous Materials, with local amendments, if any.

2. California Building Code.

PART 2 - PRODUCTS

2.01 SELF PRIMING MAGNETIC DRIVE SEAL-LESS PUMPS

A. Magnetic Drive Chemical Transfer Pump Schedule

Service	Sodium Hypochlorite, 12.5%	Ferric Chloride, 40%	Ammonium Sulfate, 39%
Quantity of Pumps	1	1	1
Pump Tag No.	P410	P420	P430
Minimum Lift (of Water)	10 FT	10 FT	10 FT
Primary Point	18 GPM @ 15 FT ±4 FT	18 GPM @ 15 FT ±4 FT	18 GPM @ 15 FT ±4 FT
Maximum Capacity	21 GPM	21 GPM	21 GPM
Shutoff Head	28 FT ±3 FT	28 FT ±3 FT	28 FT ±3 FT
Motor Horsepower	1/3 HP	1/3 HP	1/3 HP

B. Type

1. Each pump shall be a self-priming, seal-less, centrifugal pump with a magnetic drive, designed for continuous duty.

C. Performance

1. The pumps shall operate without excessive noise or vibration over the full operating range indicated in the Magnetic Drive Chemical Transfer Pumps Schedule above.

D. Materials

1. Pump Casing and End Cover: Polypropylene

2. Impeller: Silicone Carbide

3. Impeller Shaft: Ceramic

4. Thrust Ring: Ceramic

5. O-ring: Viton

E. Connections

1. The pump suction and discharge connections shall be 1-inch, minimum, MNPT.

F. Magnetic Drive

1. The pump drive shall be a dynamically balanced, encapsulated, drive magnet that generates a rotating field from the electric power supply. The magnetic field shall cause rotation of the pump impeller without direct contact to the electric motor shaft.

G. Electric Motor

1. Motor size as indicated in the Magnetic Drive Chemical Transfer Pumps Schedule above. See Section 11060 for additional requirements.

2. The pump shall be capable of operating on 115V, 60 Hz, single phase power supply.

H. Controls

1. Provide a spring-loaded hand-off switch for control of the chemical transfer pump that requires physically holding the switch in the on-position to run the pump.

2. See Section 16010 for pushbutton requirements.

I. Manufacturer

1. Sethco, PMSP 500 Series;

2. Finish Thompson, SP 10 Series;

3. Or equal.

2.02 DIAPHRAGM PUMPS

A. Diaphragm Metering Pump Schedule

Service	Ferric Chloride, 40%	Ammonium Sulfate, 39%
Quantity of Pumps	2	2
Pump Tag No.	P421, P422	P431, P432
Minimum Operating Capacity	0.11 GPH	0.24 GPH
Maximum Operating Capacity	0.21 GPH	0.30 GPH
Maximum Pump Capacity	0.35 GPH	0.52 GPH
Maximum Operating Pressure	90 PSI	90 PSI
Pump Rated Pressure (Minimum)	150 PSI	150 PSI

B. Type

1. Each pump shall be a positive displacement, electronic, solenoid driven, diaphragm metering pump.

C. Performance

1. The metering pump shall be capable of pumping the maximum pump capacity against the pump rated pressure specified in the Diaphragm Metering Pump Schedule above.

2. The maximum pump capacity is at the 100-percent stroke and 100-percent speed output.

3. The stroke length shall be adjustable from 10:1 and the stroke speed shall be adjustable from 20:1, minimum, for a minimum turn down ratio of 200:1.

4. Metering performance shall be reproducible to within ±3-percent of the maximum capacity.

D. Construction

1. Each metering pump shall be a complete assembly including head, diaphragm, and integral check valve.
2. Provide a diaphragm leak detector mounted on the pump head to detect diaphragm failure.

E. Materials

1. Use the following Head: PVDF
2. Fittings: PVDF
3. Balls: Ceramic
4. Seat/O-rings: PTFE

F. Drive

1. The pump mechanism shall be totally enclosed with no exposed moving parts.
2. The electronic control module shall be located opposite of the liquid end and protected by a clear cover.
3. The average power consumption shall not exceed 24 watts when operating at full speed and against maximum pressure conditions.

G. Controls

1. The pump shall be capable of manual control from a front control panel touchpad.
2. The pump shall be capable of remote start/stop.
3. The pump shall be capable of external pacing control via a 4-20mA analog input.
4. The pump shall have a 4-20mA speed output signal for remote monitoring.

H. Manufacturer

1. Walchem, EWN Series;
2. LMI, PD Series;
3. Or equal.

2.03 PERISTALTIC PUMPS

A. Peristaltic Metering Pump Schedule

Service	Sodium Hypochlorite, 12.5%
Quantity of Pumps	2
Pump Tag No.	P411, P412
Minimum Operating Capacity	1.00 GPH
Maximum Operating Capacity	1.25 GPH
Maximum Pump Capacity	1.70 GPH
Maximum Operating Pressure	90 PSI
Pump Rated Pressure (Minimum)	100 PSI

B. Type

1. Each pump shall be a positive displacement, peristaltic type tubing pump with a non-spring-loaded roller assembly located in the pump head, and tubing assembly with attached connection fittings.

C. Performance

1. The metering pump capacity and rated pressure shall be as specified in the Peristaltic Metering Pump Schedule above.

2. The pump shall be capable of running dry without damage.

3. The pump shall be capable of operating in either direction without variation.

4. The pump shall be capable of self-priming at the maximum rated pressure. Suction lift shall be at least 20 feet of water.

D. Pump Head

1. The pump head shall be a single, unbroken track with a clear removable cover or clear door. The pump head cover or door shall not require tools for removal of the cover or opening of the door.

2. The rotor assembly shall install onto the motor shaft and be removable without tools.

3. Provide tube failure detection in the pump head. The tube failure detection system shall sense tube failure by detecting chemical in the pump head and shall stop the pump and provide an output alarm when chemical in the pump head is detected.

E. Tubing Assembly

1. The tubing shall be provided by the pump manufacturer. Only tubing provided by the pump manufacturer will be acceptable.

2. The pump tube shall be assembled to connection fittings. Fitting connections shall be 3/4-inch tri-clamp adapters.

3. Select tube size to provide the specified pump output range at the maximum pump rated pressure.

4. The tube material shall be compatible with the pumped chemical.

F. Drive System

1. The drive system shall be installed and totally enclosed in a NEMA 4X (IP66) washdown enclosure.

2. The pump shall be capable of operating on 110VAC or 208VAC, 60 Hz, single phase power supply.

3. Motor shall be reversible, 1/8-HP DC gear motor rated for continuous duty and shall include overload protection.

G. Controls

1. The pump shall be capable of manual control from a front control panel touchpad.

2. The pump shall be capable of remote start/stop and external pacing control via a 4-20mA analog input.

H. Manufacturer

1. Blue-White, ProSeries Flex-Pro;

2. Verder, Vantage 5000;

3. Or equal.

2.04 CHEMICAL FEED SYSTEM ACCESSORIES

A. General: Materials of construction shall be satisfactory for continuous exposure to the chemicals listed herein.

B. Piping Specialties

1. Y-Strainers

a. Provide a Y-strainer on the suction pipeline of each chemical metering pump.

b. Materials

1) Body: PVC

2) Screen: PVC

3) Seals: FPM/FKM/Viton for Sodium Hypochlorite service; EDPM for all other chemical services

c. Screen: 1/32-inch perforations

d. Connections: True union

e. Strainer shall have hex cap for access to screen.

2. Pulsation Dampeners

a. Provide a pulsation dampener with pressure gauge on the discharge pipeline of each chemical metering pump.

b. Properly size pulsation dampener for each chemical metering pump.

c. Maximum rated pressure shall be at least 150 psi.

d. Materials

1) Body: PVC

2) Bladder: FPM/FKM/Viton for Sodium Hypochlorite service; EDPM for all other chemical services

e. Connections: NPT

3. Pressure Relief and Back Pressure Valves

a. Provide pressure relief valves and back pressure valves on the discharge pipeline of each chemical metering pump. Install valves where shown on the Drawings and/or as recommended by the manufacturer.

b. Valves shall be rated to 150 psi and shall be field adjustable from 10 to 150 psi.

c. Materials

1) Body: PVC

2) Diaphragm: FPM/FKM/Viton for Sodium Hypochlorite service; EDPM for all other chemical services.

d. Connections: NPT

C. Flexible Connections

1. Provide hoses in the chemical piping systems where shown on the Drawings. Each chemical metering pump shall have flexible connections in the suction and discharge piping. Each tank shall have flexible connections at the tank outlet to the chemical pump suction.

2. Hose material shall be as listed below for each chemical system.

a. Ammonium Sulfate: PTFE, PVC (Reinforced), PVDF, or Viton

b. Ferric Chloride: PTFE, PVC (Reinforced), PVDF, or Viton

c. Sodium Hypochlorite: PTFE, PVC (Reinforced), PVDF, or Viton

3. Hose Length

a. At Pump Suction and Discharge: No less than 6 inches long

b. At Tanks: No less than 18 inches long

D. Calibration Cylinders

1. Provide a graduated calibration cylinder for each chemical metering pump.

2. The calibration cylinder size shall be as follows:

a. Ammonium Sulfate: 100 mL

b. Ferric Chloride: 100 mL

c. Sodium Hypochlorite: 200 mL

3. Material: PVC

4. Connections: Socket; removable top seal with vent connection

E. Chemical Injection Assembly

1. Provide a chemical injection assembly where shown on the Drawings. The assembly shall include a corporation stop and injection quill. The assembly shall be retractable and shall have an integral check valve.

2. Connection size and insertion length shall be as noted on the Drawings.

3. Pressure Rating: 150 psi

4. Materials

a. Valve and Solution Tube: Hastelloy C

b. Seals: FPM/FKM/Viton for Sodium Hypochlorite service; EDPM for all other chemical services.

5. Manufacturer: Safe-T-Flo; Primary Fluid Systems Inc.; or equal.

F. Static Mixers

1. General: Provide static mixers where shown on the Drawings. Static mixer shall be the same diameter as the surrounding pipe. Static mixers shall have integral

mixing elements in a helical pattern to mix the chemical solution injected upstream of the mixer with the process water as they travel through the mixing elements.

2. Material: Carbon Steel

3. Connections: ASME B16.5 Class 150 Flange

4. Number of Mixing Elements integral to mixer: 3, minimum

5. Manufacturer: Komax; Koflo; or equal.

G. Pump Panel

1. Provide pump panels for mounting the chemical metering pumps, piping, and appurtenances as shown on the Drawings.

2. The pump panels shall be constructed of polyethylene material that is compatible with the pumped chemical.

3. Provide shelves on the pump panels for attaching the chemical metering pumps. Provide a 2-inch deep, water-tight sill at the base of each panel for containing minor chemical leaks and spills.

4. The pump panels shall be mounted to the wall as shown on the Drawings.

H. Chemical Weigh Scale and Indicator

1. Weigh Scale

a. Provide a weigh scale for each chemical day tank sized to accept the tanks noted in the schedule below:

Chemical	Tank Size (in. Dia.)	Max Weight (lbs)
Ammonium Sulfate	23	590
Sodium Hypochlorite	31	1,610
Ferric Chloride	23	370

b. Provide four (4) adjustable tank restraint clips to secure the vessel to the platform.

c. Accuracy: 0.25% of the full scale capacity.

d. Platform scale coating shall be resistant to moisture, chemical, abrasion, impact, and UV light.

2. Digital Indicator

a. Provide a digital indicator for each weigh scale.

b. The indicator shall be housed in a NEMA 4X, UL approved enclosure.

c. The indicator shall have a backlit alphanumeric display.

d. The indicator shall have an adjustable 4-20 mA signal that outputs net weight and chemical use rate for each scale.

e. The indicator shall display alarms for the following conditions, at minimum: low level, high level, high use rate, supply exhausted, and load cell failure.

f. The indicator shall have sufficient relays for the alarms and pump controls indicated on the Drawings.

g. The indicator shall be capable of remote communication with MODBUS.

3. Manufacturer: Force Flow, Chem-Scale with Solo G-2 Indicator; or equal.

I. Electric Pallet Jack

1. Provide an electric pallet jack for transporting chemical tote and drums into and out of the building.

2. Performance

a. Load Capacity: Maximum load capacity of at least 3,000 pounds.

b. Gradeability: The pallet jack shall have a maximum gradeability under full load of at least 10-percent.

c. Travel Speed: The pallet jack shall be capable of traveling at least 3.5 mph when fully loaded.

3. Size

a. Fork Length: 48-inch, nominal.

b. Overall Length: 71±1 inch.

c. Overall Width: 27±1 inch.

d. Overall Height: 48±1 inch, fully raised handle.

4. Construction

a. Forks: Box rail fork construction with tapered fork tips for pallet entry.

b. Hydraulic Lift: Equip with dual lift cylinders and torsional bar.

c. Drive Unit and Brakes: AC drive motor; equipped with parking brakes and ramp hold feature to prevent reverse travel on an incline.

d. Safety Features: Provide pallet with electric horn, emergency power disconnect, and anti-roll back system.

5. Power Supply: 24-volt electrical system with transistor control sealed from dirt, dust, and moisture. Include battery compartment, battery package, and charger to power the pallet jack.

6. Manufacturers: Crown; Toyota; or equal.

2.05 SPECIAL TOOLS AND SPARE PARTS

A. Furnish any special tools required for replacement of parts and adjustment of equipment.

B. Furnish spare parts necessary for continued operation of the equipment.

1. For each diaphragm pump supplied, spare parts shall include but not be limited to one set of: valve seats, seals, diaphragm, pump seals, bearings, and fuses.

2. For each peristaltic pump supplied, spare parts shall include but not be limited to: two tubing assemblies with connection fittings.

PART 3 - EXECUTION

3.01 INSTALLATION

A. Install chemical feed equipment in strict conformance with the manufacturer's installation instructions and with favorably reviewed shop drawings.

B. An authorized representative of the equipment manufacturer shall perform check of final installation, startup, adjustment, calibration, and training.

3.02 FIELD PAINTING

A. Apply final coat of paint to equipment in accordance with Section 09960.

3.03 IDENTIFICATION

A. Identification of health, flammability, and reactivity of each chemical shall be affixed above each chemical feed area. See Section 10200 for signage requirements.

3.04 FIELD TESTING

A. Leak tests of chemical storage tanks shall be successfully completed (Section 13216) before beginning testing of chemical transfer and feed equipment.

B. Initial Test with Potable Water

1. Test each chemical feed system for four hours with potable water.

2. Test shall include pumping of chemical system against a closed discharge solution pipeline to test relief valve operation. This shall be performed for each chemical metering pump and witnessed by the Engineer.

3. Following satisfactory testing with water, completely drain and remove water from the chemical system. Thoroughly dry the chemical system pipeline. This may require blowing oil-free dry air through the pipelines.

4. Dispose of water used for testing and cleaning of the chemical systems.

C. Final Test with Chemical

1. Final test with chemical shall proceed only after satisfactory testing with water, complete draining and removal of water from the chemical system, and thorough drying.

2. Provide sufficient chemical for test. The chemicals used for the field tests shall be favorably reviewed by the Engineer prior to the test. The MSDS for each chemical shall be on hand during the testing of each chemical feed system.

3. Calibrate each chemical metering pump with chemical solution and test the pump operation throughout its pumping range. Test each chemical feed system in all operation and alarm modes to show conformance with these Specifications.

3.05 FIELD SERVICES

A. Provide an engineer or technician from the chemical feed equipment supplier(s) to make all adjustment and monitor the field testing specified in Paragraphs 3.01 and 3.03 above.

B. After successful completion of the field testing, the engineer or technician from the chemical feed equipment supplier(s) shall provide training to plant personnel in system operation, maintenance, and safety procedures, per Section 01820.

END OF SECTION

SECTION 11475
AIR COMPRESSOR UNIT

PART 1 - GENERAL

1.01 SECTION INCLUDES

A. Provide a complete, tested, and operating oil-less air compressor and accessories as shown on the Drawings and specified herein.

1.02 REFERENCED SECTIONS

A. The following Sections are referenced in this Section

1. Section 01330 – Submittals
2. Section 01611 – Seismic Design Requirements
3. Section 01999 – Reference Forms
4. Section 09960 – High Performance Coatings
5. Section 11060 – Electric Motors
6. Section 13224 – Pressure Filter

1.03 SUBMITTALS

A. Comply with Section 01330.

B. Submit the following as a single complete initial submittal:

1. Product data demonstrating that the equipment conforms to the Specifications.
2. Motor data as required in Section 11060.
3. Seismic anchorage design and related drawings.

C. Seismic Certification: Submit certification from the manufacturer that the equipment is capable of resisting seismic loads. Loading shall be as described in Section 01611.

D. Manuals: Furnish manufacturer's installation, lubrication, operation and maintenance manuals, bulletins, and spare parts lists.

E. Submit Manufacturer’s Installation Certification Form from the manufacturer stating that the equipment has been properly installed, adjusted, and tested and is ready for full-time operation (Section 01999).

1.04 QUALITY ASSURANCE

A. Equipment furnished under this Section shall be supplied by a single manufacturer who has been regularly engaged in the design and manufacture of the equipment for at least five years.

B. Demonstrate to the satisfaction of the Engineer that the quality to equipment made by those manufacturers named herein.

PART 2 - PRODUCTS

2.01 AIR COMPRESSOR UNIT

A. Air Compressor

1. Quantity: One (1).

2. Type: Simplex, stationary, electric, tank-mounted.

3. Capacity: Air flow and pressure requirements for the air compressor shall be as needed for the operation of the filter solenoid valve panel and pneumatic valve actuators and shall be determined by the Filter System Supplier. See Section 13224.

4. Construction: Compressor, motor, and accessories shall be factory assembled and mounted on a steel frame. Design shall be corrosion-resistant and shall use oil for lubrication of rotating parts.

5. Motor: Motor size shall be determined by the Filter System Supplier. Motor shall be suitable for operation with 480 volts, three phase power supply and shall conform to the requirements of Section 11060.

B. Compressor Tank

1. Tank Size: Tank size shall be determined by the Filter System Supplier.

2. Orientation: Vertical.

3. Material: Cast iron.

4. Standard: Conform to ASME Tank Standard.

C. Accessories

1. Provide a manual drain valve, oil sight class, pressure gauge and pressure safety valve.

2. Provide 1 quart supply of lubrication oil.

D. Finish: Apply manufacturer's standard factory paint finish.

E. Manufacturers: Speedaire; or equal.

PART 3 - EXECUTION

3.01 INSTALLATION

A. Install equipment in strict conformance with the manufacturer's installation instructions.

3.02 PAINTING

A. Apply a final color coat of paint in the field to the compressor assembly in accordance with Section 09960.

3.03 FIELD TESTING

A. Field test with Pressure Filter System. See Section 13224.

B. Furnish equipment and apparatus necessary for tests.

END OF SECTION

SECTION 11500
DISINFECTION

PART 1 - GENERAL

1.01 SECTION INCLUDES

A. Furnish materials, tools, equipment, and labor required to disinfect the following facilities:

1. Well
2. Filter Vessel with Filter Media
3. Large Pipelines
    a. Well artesian relief and flush pipelines
    b. Raw water pipelines
    c. Filtered water pipelines
    d. Treated water pipelines
    e. Surface wash pipelines
    f. Backwash pipelines
    g. Filter-to-waste pipelines
4. Small Pipelines
    a. Chemical pipelines
    b. Sample pipelines
    c. Domestic/Potable water pipelines

B. Provide required testing.

C. Dechlorinate and dispose of disinfection solution.

1.02 REFERENCED SECTIONS

A. The following Sections are referenced in this Section

1. Section 01330 – Submittals
2. Section 01560 – Environmental Controls

1.03 REFERENCED STANDARDS

A. American Water Works Association (AWWA):

1. AWWA B300 Hypochlorites
2. AWWA C651 Disinfecting Water Mains
3. AWWA C652 Disinfection of Water Storage Facilities
4. AWWA C653 Disinfection of Water Treatment Plants
5. AWWA C654 Disinfection of Wells
6. AWWA C655 Field Dechlorination

B. National Sanitation Foundation (NSF) / ANSI:

1. NSF/ANSI Standard 60: Drinking Water Treatment Chemicals – Health Effects

1.04 SUBMITTALS

A. Comply with Section 01330.

B. Submit a Disinfection Plan at least 30 days prior to conducting disinfection. At minimum, the Disinfection Plan shall include the following components:

1. Proposed schedule for disinfecting the required surfaces.

2. Methods, procedures, and materials that will be used to disinfect each type of facility (e.g., well, filter, large pipelines, and small pipelines).

3. Drawing(s) showing temporary facilities needed to complete the disinfection process, including: closed valves and isolation points; configuration of temporary piping, pumping, and equipment; disinfection solution injection locations; and sample locations.

4. Method of disposing spent disinfection solution.

C. Submit product information for disinfectant and dichlorination chemicals that will be used.

D. Submit the laboratory test results.

1.05 QUALITY ASSURANCE

A. Demonstrate through analytical testing that the facility is disinfected and meets requirements specified in the AWWA standard for disinfection of the associated type of facility.

B. Enlist the services of a testing laboratory to obtain, transport, and test water samples. The testing laboratory shall be certified to perform bacteriological testing in accordance with the AWWA standards.

C. Testing expenses, including laboratory testing, shall be borne by the Contractor.

PART 2 - PRODUCTS

2.01 DILUTION WATER

A. Obtain potable water from the existing water distribution system. Establish temporary connection to existing distribution system and provide protection against cross-connection as required by AWWA C651.

2.02 DISINFECTANT

A. Use sodium hypochlorite solution or calcium hypochlorite granules or tablets meeting the requirements of AWWA B300. Do not use hypochlorite manufactured for swimming pools.

PART 3 - EXECUTION

3.01 SCHEDULING AND SEQUENCING

A. Disinfection of facilities shall occur only after successful completion of required pressure testing of the facilities.

B. Disinfection of the filter shall occur after the filter media has been placed, backwashed, and prepared for service.

C. When disinfection of a facility has been satisfactorily completed, no further entry to the interior of the facility will be allowed. See Paragraph 3.06 below for requirements is re-entry is required.

3.02 PREPARATION

A. Provide all necessary appurtenances required for the disinfection procedures including taps, temporary piping, connections and shutoff valves. Submit data on appurtenances which will be permanently installed for review by the Engineer.

B. The Contractor is advised that precautions taken to keep surfaces clean during construction and avoiding the entry of deleterious substances on the work during construction will facilitate achieving the disinfection requirements of this project.

C. Prior to disinfecting, thoroughly clean accessible surfaces of dust, dirt, foreign matter and deleterious substances remove any oil by contact with absorbents. Use water sprays, steam cleaning, vacuum cleaning, swabbing, hand brushing or a combination of methods and rinsing to effect the cleaning, but do not use any method that will be detrimental to the finish surfaces. Flush inaccessible surfaces clean.

3.03 APPLICATION

A. After completing all construction activities, disinfect the required surfaces with chlorine solutions in accordance with the following procedures. Following disinfection and flushing, the testing laboratory shall obtain water samples for bacteriological analysis of the water. If the specified bacteriological requirements are not satisfied, repeat disinfection procedure until the requirements are met.

B. Well

1. Standard: AWWA C654, as amended herein

2. Forms of Chlorine

a. Sodium hypochlorite or calcium hypochlorite.

b. The disinfecting agent shall be furnished or prepared in liquid form and placed in the well through a hose or tremie of sufficient length to extend to the bottom of the well. Total volume of solution injected shall be at least 150% of the standing water volume in the well casing.

3. Procedures

a. Artesian wells may not require chlorination. Bacteriological sampling and testing may be performed prior to chlorination to determine whether chlorination is necessary.

b. If coliforms are determined to be present, chlorine solution should be applied at or below the lowest aquifer formation producing the artesian condition in an amount that will produce at least 25 mg/L in the flowing water.

c. If bacteriological testing still shows the presence of coliform after this disinfection, proceed with the following disinfection procedure:

1) Apply the disinfecting agent through the tremie, which is to be raised and lowered to achieve uniform distribution of the solution throughout the well.

2) After placement of solution, surge the well at least 3 times to improve mixing. The chlorinated water shall remain in the well for at least 12 hours.

3) A residual chlorine level of not less than 2 parts per million should remain in the well and shall be verified by the Contractor to the satisfaction of the Engineer.

4. Interim Disinfection

a. Should the constructed well be left idle for three or more days, an interim disinfection shall be conducted by the Contractor.

b. Install an approved disinfecting agent in an amount equal to approximately 10 percent of the amount required for final disinfection but not less than required to maintain the necessary residual.

c. The disinfecting agent shall be furnished or prepared in liquid form and placed in the well through a hose or tremie of sufficient length to extend to the bottom of the well.

d. Apply the disinfecting agent through the tremie, which is to be raised and lowered to achieve uniform distribution of the solution throughout the well.

C. Filter

1. Standard: AWWA C652 and AWWA C653, as amended herein.

2. Forms of Chlorine: Sodium hypochlorite or calcium hypochlorite.

3. Method:

a. Walls: AWWA C652, Method 2 (brush or spray)

b. Media: Soak method

D. Large Pipelines

1. Standard: AWWA C651, as amended herein.

2. Forms of Chlorine: Sodium hypochlorite or calcium hypochlorite.

3. Method: Continuous feed.

E. Small Pipelines

1. Preparation: Provide the system with a 1-inch minimum service cock or valve or other means to inject chlorine solution at a point within 2 or 3 feet of its junction

with the supply source. When system is complete, thoroughly flush it by fully opening every outlet until clear water flows from all of them.

2. Forms of Chlorine: Sodium hypochlorite or calcium hypochlorite in sufficient quantities to produce chlorine concentration of at least 50 parts per million in the system.

3. Disinfecting Procedure

   a. Connect a hand-operated pump, or other means of injecting the disinfecting agent, to one-inch minimum service cock or valve or other injection device. Pump must provide a pressure greater than that of supply of system.

   b. With system completely full of water and supply valve open, proceed to adjust every outlet of system so that a trickle of water flows from each.

   c. Inject disinfectant slowly and continuously at an even rate, not in slugs, until a test at each outlet shows a free chlorine residual concentration of at least 50 parts per million.

   d. Close all outlets and valves, including valve connecting to supply line and one-inch minimum service cock on solution injection connection.

   e. Maintain condition for 24 hours. After 24 hours, test for residual chlorine at each outlet. The free residual chlorine concentration indicated should be not less than 10 ppm. If the indicated free chlorine concentration is less than 10 ppm, repeat disinfection procedure until an approved result is obtained.

   f. When the above procedure has been completed to the satisfaction of the Engineer, flush out entire system with fresh water until tests at all outlets show a residual of not more than 0.5 ppm.

3.04 SAMPLE COLLECTION AND TESTING

A. Chlorine Residual Testing

1. AWWA C651, Appendix A, DPD Drop Dilution Method, except where otherwise specified.

2. Testing shall be performed by the Contractor and witnessed by the City or Engineer.

B. Bacteriological Analyses of Water

1. After the completion of disinfecting procedure, including the final flushing, the testing laboratory personnel shall obtain water samples from the system for bacteriological analyses.

2. For each facility, follow the bacteriological sampling procedures described in the associated AWWA standard for disinfection of the facility.

3. Requirements for satisfactory disinfection of water supply are that bacteriological analyses indicate that water samples are negative for coliform organisms, and that Heterotrophic plate count (standard plate count) is less than 100 colony forming units per milliliter.

4. If bacteriological analyses do not satisfy the above requirements, then repeat disinfection procedure at no additional cost to the City until these requirements are met.

3.05 DISPOSAL OF DISINFECTION SOLUTION

A. Disinfection solution may be dechlorinated to 1 to 2 mg per liter of free chlorine and discharged to the sanitary sewer. See Section 01560 for restrictions on discharge into the sanitary sewer.

B. Take care to assure that chlorinated water is not spilled into storm drains.

3.06 PROTECTION OF DISINFECTED STRUCTURES

A. If required to re-enter a disinfected structure, the work shall be conducted utilizing techniques and work methods as necessary to maintain the disinfected status. This shall include use of disinfected foot coverings, tools, and the like.

B. In the event the disinfected facilities are contaminated, disinfection on a localized basis must be repeated at no additional cost to the City.

C. The Contractor shall be responsible for maintaining security of the disinfected facilities.

END OF SECTION

SECTION 12350

LABORATORY CASEWORK

PART 1 - GENERAL

1.01 SECTION INCLUDES

A. Furnish modular and custom laboratory casework, with molded epoxy resin laboratory top, sink, and related accessories. Include factory prefinishing and field installation by factory trained and supervised installers.

1.02 REFERENCED SECTIONS

A. The following Section is referenced in this Section

1. Section 01330 – Submittals

1.03 REFERENCES

A. SEFA – Scientific Equipment and Furniture Association

B. UL – Underwriters Laboratories

1.04 SUBMITTALS

A. Comply with Section 01330.

B. Submit the following items:

1. Manufacturer’s Data: Manufacturer's data and installation instructions for each type of casework.

2. Shop Drawings

a. Prepared specifically for this project. Drawings to show laboratory furniture in plan and in elevation at scale: 1/2−inch equals 1 foot, or larger. Show all cutouts for electrical, mechanical, and plumbing fixtures and accessories. Show all dimensions. Furnish templates for proper location of accessories furnished and installed by other trades. Show location of backing required for attachment of cabinets.

b. For furniture assemblies showing plans, elevations, ends, cross−sections, service run spaces, location and type of service fittings. Submit laboratory furniture manufacturer's details showing the following:

1) Top construction.

2) Drawer construction.

3) Corner and leg construction.

4) Cabinet construction.

5) Door construction.

6) Finish.

7) Hardware.

8) Accessories.

c. Coordinate shop drawings with other work involved.

d. Provide roughing−in drawings for mechanical and electrical services when required.

e. Call attention to items that deviate from the project specifications.

3. Manufacturer's full line of standard color chips of casework and work surface finishes.

4. Certification indicating compliance with SEFA 8.

1.05 PERFORMANCE REQUIREMENTS

A. Worktop

1. Chemical Resistance: Tops shall resist chemical attacks from normally used laboratory reagents. Weight change of top samples submerged in the reagents* listed in the next paragraph for a period of seven days shall be less than one−tenth of one percent, except that the weight change for those reagents marked with ** shall be less than one percent. (Tests shall be performed in accordance with A.S.T.M. Method D543−67 at 77˚F.)

Acetic Acid, Glacial	Iso−Octane
Acetic Acid, 5%	Kerosene
Acetone	Methyl Alcohol
Ammonium Hydroxide, 28%	Methyl Ethyl Ketone
Ammonium Hydroxide, 10%	Mineral Oil
Aniline Oil	Nitric Acid, 10%
Benzene	Nitric Acid, 40%
Carbon Tetrachloride	Nitric Acid, 70%**
Citric Acid, 10%	Oleic Acid
Chromic Acid, 40%**	Olive Oil
Cottonseed	Oil Phenol, 5%
Dichromate Cleaning Solution**	Soap Solution, 1%
Diethyl Ether	Sodium Carbonate, 20%
Dimethyl Formamide	Sodium Carbonate, 2%
Detergent Solution, 1/4%	Sodium Chloride, 10%
Distilled Water	Sodium Hydroxide, 1%
Ethyl Acetate	Sodium Hydroxide, 10%
Ethyl Alcohol, 95%	Sodium Hydroxide, 50%
Ethyl Alcohol, 50%	Sodium Hypochlorite,5%
Ethylene Dichloride	Sulfuric Acid, 3%
Heptane	Sulfuric Acid, 30%
Hydrochloric Acid, 10%	Sulfuric Acid, 85%
Hydrochloric Acid, 37%	Toluene
Hydrogen Peroxide, 3%	Transformer Oil
Hydrogen Peroxide, 28%	Turpentine

2. Heat Resistance: A high form porcelain crucible, size 0, 15 ml capacity, shall be heated over a Bunsen burner until the crucible bottom attains an incipient red heat. Immediately, the hot crucible shall be transferred to the top surface and allowed to cool to room temperature. Upon removal of the cooled crucible, there shall be no blisters, cracks or any breakdown of the top surface whatsoever.

1.06 QUALITY ASSURANCE

A. Provide products of a single manufacturer regularly engaged in fabricating laboratory casework.

B. Furniture shall meet the performance requirements described in SEFA 8 and the best practices of the wood casework industry.

PART 2 - PRODUCTS

2.01 MATERIALS

A. Solid Woods: Lumber to be kiln dried at manufacturer's plant to moisture content of 5 to 6%. Exposed exterior cabinet wood to be White Maple. Drawer sides and backs solid hardwood, clear and sound, unselected for color.

B. Plywoods: All plywood shall be hardwood plywood. Softwoods such as Fir or Pine are not permitted. Thickness as specified, consisting of cross and face plies glued with water resistant resin glue.

C. Banding: Plywood panels shall be edge banded as specified with 3mm hardwood edgebanding to match the plywood veneer.

D. Hardboard: Hardboard shall be a wood fiber/resinous combination formed with heat and pressure into sheets providing a hard, smooth surface.

E. Glue: Type II water resistant, with gluing done in clamps and jigs.

2.02 CASEWORK

A. General

B. Cabinets and cases to be of the size and configuration shown on the drawings and constructed as follows:

1. End Panels, Bottom, and Shelves: All cabinet end panels shall be 3/4" thick White Maple veener core plywood edge banded on exposed edges. End panels shall be multiple doweled, glued, and screwed to top frame members, intermediate rails, and bottoms. Cupboard bottoms shall be 3/4" thick White Maple veneer core plywood edge banded on exposed edge. All cupboard base cabinet shelves shall be full−width adjustable, 3/4" thick White Maple veneer core plywood edge banded on exposed edge. Integrally joined parts shall result in a totally enclosed cabinet.

2. Backs: Cabinet backs shall be 1/4" thick hardboard, dadoed into end panels and securely fastened to cabinet bottom and top back rail. Backs that are attached to end panels with cleats shall be unacceptable.

3. Top Frame: The cabinet top frame shall consist of a front rail and a back rail. The front rail shall be 3−1/8" x 1" hardwood with 3mm White Maple facing. The back rail shall be 2−1/2" x 3/4" hardwood plywood.

4. Intermediate Rails: Intermediate rails when specified shall be 3−1/4" x 3/4" hardwood plywood edge banded on exposed edge. Rails shall be multiple doweled and screwed to end panels. Intermediate rails shall be mounted at the front between the drawers and between all drawers and doors.

5. Drawers: Drawer sides, back, and sub−front shall be 1/2" thick, 9−ply Birch plywood. Drawer heads shall be 3/4" thick, White Maple, composite core plywood. A dovetail joint shall be used to attach the drawer sub−front and drawer back to the drawer sides. Drawer bottoms shall be 1/4" thick hardboard, set and hot−melt glued into 1/4" grooves, four sides. Each drawer shall have one pull mounted horizontally, drawers over 24" long shall have two pulls.

6. Doors: Swinging doors shall be 3/4", White Maple, composite core plywood edge banded on all four edges, mounted on cabinet with 1 pair of offset hinges and shall be latched with a roller catch. Double doors without locks shall have a roller catch on each door. Double doors with locks shall have an elbow catch mounted on the left−hand door and the lock and a roller catch mounted on the right−hand door. Each door shall have one pull mounted vertically.

2.03 HARDWARE AND TRIM

A. Drawer and Door Pulls: Drawer and door pulls shall be mounted on 4" centers, offering a comfortable hand grip, and be securely fastened to doors and drawers. They shall be manufactured from anodized aluminum in a shallow rounded shape.

B. Flush Pulls: Flush pulls for sliding doors shall be satin finish chrome, providing a recessed finger grip. Finger holes or slots machined into doors shall be unacceptable.

C. Hinges: Hinges shall be the five (5) knuckle, satin finish stainless steel, institutional, offset type for all swinging doors. Hinges shall be 2−3/4" long, and secured to cabinet and doors with flathead screws, so applied to withstand a weight load of 150 lbs. minimum.

D. Roller Catches: Roller Catches shall have a spring−loaded polyethylene roller and a steel strike plate.

E. Elbow Catches: Elbow catches and strike plates shall be cast aluminum with bronze finish.

F. Drawer Slides: Drawer slides shall be zinc plated, cold rolled steel, full extension, linear ball bearing slides rated at 100 pounds minimum. The drawer shall be removable without the use of tools.

G. Dowels: Dowels used to join frames and panels shall be fluted hardwood not less than 8mm in diameter.

H. Shelf Support Clips: Shelf support clips shall be twin pin type for mounting on interior of cabinet end panels. Clips shall be corrosion resistant and shall retain shelves from accidental removal and tipping. Shelves shall be adjustable on 32mm centers. Surface mounted metal support strips and clips subject to corrosion are not acceptable.

I. Sink Supports: Sink Supports, where required, shall be of a cradle type consisting of two 1−1/4" x 1−3/4" horizontal cleats and adjustable leveling bolts or glides. The horizontal

cleats shall be supported by two 3/4" x 2−1/2" hardwood plywood cleats attached to the cabinet end panels, or by four 1/4" steel rods attached to the cabinet top frame.

J. Support Struts: Support struts shall consist of two 16 gauge channel uprights fastened top and bottom by two adjustable "U" shaped spreaders, each 12 gauge, 1−1/2" x length required. Struts shall be furnished to support drain troughs, and to support work top at plumbing space under fume hood superstructures or other heavy loads. They shall be fabricated so as to accept industry standard, pipe and conduit hangers.

2.04 WORK SURFACES

A. Molded Epoxy Resin

1. Manufacturers: "Kemresin" by Kewaunee Scientific Corporation; United Lab Equipment, or equal.

2. Epoxy Resin tops shall consist of modified epoxy resin that has been especially compounded and cured to provide the optimum physical and chemical resistance properties required of a heavy−duty laboratory table top. Tops and curbs shall be a uniform mixture throughout their full thickness, and shall not depend upon a surface coating that is readily removed by chemical and/or physical abuse.

3. Material shall be resistant to acids, alkalis, salts and solvents. Physical properties and performance test results for heat resistance, chemical resistance, and 24−hour chemical spot test shall be equivalent to or better than the named product of the first−named manufacturer.

4. Tops shall be 1" thick minimum, exposed edges beveled top and bottom, and drip grooves provided on the underside at all exposed edges. 4" high curbs at the backs and ends of tops shall be 1" thick and bonded to the deck to form a square watertight joint. All joints shall be made with a highly chemical and corrosion resistant cement having the same properties as the base material. Drip grooves shall be provided on the underside of all exposed edges of tops installed on units or assemblies containing sinks.

5. Tops and curbs shall be non−glaring.

6. Sink cutouts shall be smooth and uniform without saw marks with the top edge beveled. The bottom edge of the sink opening shall be finished smooth with the edge broken to prevent sharpness. Corners of sink cutouts shall be radiused not less than 3/4".

2.05 LABORATORY FIXTURES AND ACCESSORIES

A. Sink

1. Modified epoxy resin, heat−formed into one piece construction having rounded corners and 1−1/2−inch acid resistant polyethylene outlet with strainer.

2. Size as shown on Drawings.

3. Provide sink support frames and all required clamps for field installation.

4. Manufacturers: Kewaunee "Kemresin;" Hamilton modified epoxy 20L202; or equal.

B. Sink Trap

1. Polyethylene, "P" drum type, 1−1/2−inch diameter minimum.

2. Manufacturers: Kewaunee; Hamilton; or equal.

PART 3 - EXECUTION

3.01 DELIVERY, STORAGE AND HANDLING

A. Protect laboratory casework prior, during and after installation to assure equipment's acceptability at the time of completion.

B. Deliver materials in labeled, unbroken packages and crates as factory sealed. Store materials as recommended by the manufacturer. Take care in handling equipment to prevent damage.

C. Building must be enclosed and heating/air conditioning system in operation for at least five days prior to delivering laboratory casework.

3.02 PREPARATION

A. Coordinate all work under this Section with all other trades whose work adjoins, combines, or aligns with same. Take such field measurements as may be required. Report any major discrepancy between drawings and field dimensions, and secure directions before proceeding.

B. Verify that all blocking and backing are properly located before wall finishes are in place.

C. Inspect all surfaces to receive casework and report all defects before proceeding.

3.03 INSTALLATION

A. Set casework in place, scribe plumb, square and level and secure to structure in position indicated with all required fastenings, clip angles, bases, anchors, nailing, blocking, shimming and other fittings.

B. Provide all closures, fillers and scribe strips required to provide a neat and finished installation. All such exposed items shall match casework.

C. Furnish all miscellaneous metal supports, clips, anchors, fasteners and bracings required for installation.

1. Anchor wall cabinets with a row of fasteners near the top and a row near the bottom of cabinets. Use 1/4−inch−diameter wood screws spaced 16 inches on centers maximum, into solid backing.

2. Anchor base cabinets to wall with a row of fasteners near the top of cabinets spaced 16 inches on centers into solid backing. Anchor to floor with a row of drilled expansion bolts into concrete floor, spaced 16 inches on centers maximum.

3. Anchor island (free standing) base cabinets with drilled expansion anchor bolts all around the perimeter of cabinets spaced 16 inches on centers maximum.

D. Adjust all doors, drawers and other moving parts to operate freely without binding or sticking, adjacent items level, vertical lines plumb and aligned, clearance uniform.

E. Field fit composition worktops, splashes and utility curbs to job conditions after cabinets are in place. Attach cabinets with concealed fasteners from inside of cabinets.

END OF SECTION

(THIS PAGE LEFT BLANK INTENTIONALLY)

SECTION 13111

GALVANIC CATHODIC PROTECTION FOR BURIED PIPES

PART 1 - GENERAL

1.01 SCOPE

A. The Contractor shall furnish all materials, install all equipment and provide all labor necessary to complete the work shown on the drawings and or listed below and all other work and miscellaneous items not specifically mentioned but reasonably inferred, including all accessories and appurtenances required for a complete system. The intent of this specification is to provide for a complete, functional cathodic protection system for the ductile iron pipe and fittings for the City of Milpitas, Well Upgrade Program, McCandless Well Facility.

1.02 WORK INCLUDED

A. Work included in this section consists of the components of the cathodic protection system, including anodes, cables, insulating joints, test stations and any other work necessary to complete the installation. A partial list of work included is as follows:

1. Cathodic protection with high potential magnesium anodes for ductile iron pipe and fittings associated with the referenced project.
2. Encasement of all ductile iron pipe, and fittings associated with the referenced water pipelines in polyethylene.
3. Bonding of buried, non-welded, (non-insulating) ductile iron pipe and fittings' joints.
4. Trenching, drilling, and other excavation.
5. Installation of anodes, cables and test stations.
6. Backfill and compaction of backfill.
7. Provide shop drawings, reports, permits, and obtain Engineer's approval where required.
8. Correction of all deficiencies.
9. Cleanup and restoration of surface.

B. The work shall include the provision of all materials, equipment, and apparatus not specifically mentioned herein or noted on the plans, but which are obviously necessary to complete the work specified.

1.03 QUALITY ASSURANCE

A. General

1. All work shall be performed to the satisfaction of the Engineer.

B. MATERIALS

1. The Contractor shall not substitute for the specified materials unless approved by the Engineer.

C. TESTING

1. Electrical continuity of the fittings, proper operation of anodes, test leads and all other cathodic protection components shall be tested by the Project Corrosion Consultant, in order to ensure proper installation and operation. The Contractor shall be responsible for correction of all deficiencies identified by the testing and all costs incurred for retesting prior to final acceptance.

D. COMPACTION

1. Compaction of backfill for anodes and trenches shall match the existing conditions and shall be approved by the Engineer.

1.04 REQUIREMENTS

A. All buried ductile iron pipes, fittings and appurtenances associated with the water lines shall be encased in 8-mil polyethylene per AWWA C-105.

B. Galvanic cathodic protection shall be installed on all buried pressurized metallic pipe, fittings and appurtenances.

C. All rubber gaskets, mechanical joints and flexible couplings shall be bonded along the entire buried length of ductile iron pipe.

D. The test station shall be installed at the location designated on the drawings.

1.05 CODE REQUIREMENTS

A. All materials, workmanship, and installation shall conform to all requirements of the legally constituted authority having jurisdiction. These authorities include, but are not limited to, the latest revision of the State of California, Department of Industrial Relations, Division of Industrial Safety Orders of the Industrial Accident Commission, and all other applicable State, County, or City standards and regulations. Nothing in the drawings or specifications is to be construed to permit work not conforming to these regulations and codes. Where larger size or better grade materials than required by these regulations and codes are specified, the specifications and drawings shall have precedence.

1.06 REFERENCES

A. This section contains references to the following documents. They are a part of this section as specified and modified. In case of a conflict between the requirements of this section and those of the listed documents, the requirements of this section shall prevail.

1. American Society of Testing and Materials (ASTM)
2. National Electrical Manufacturers Association (NEMA)
3. American Water Works Association (AWWA)
4. National Association of Corrosion Engineers (NACE)
5. American National Standards Institute (ANSI)

1.07 CONTRACTOR SUBMITTALS

A. Prior to commencing work, submit copies of the following items in accordance with Section 01330, Submittals:

1. A complete list of cathodic protection equipment and material, including name and manufacturer, catalog number, size, finish and any other pertinent data necessary for proper identification and to determine conformance with specifications. These items include but are not limited to:

   a. High Potential Magnesium Anodes
   b. Cables
   c. Exothermic Welding Equipment and Supplies
   d. Cable-To-Pipe Coating Material
   e. Traffic Boxes
   f. Terminal Boxes, Shunts and Hardware
   g. Cable Identification Tags
   h. Cable Warning Tape
   i. Bitumastic Coating
   j. Polyethylene for Encasement of Ductile Iron Pipe and Fittings pipe.
   k. Insulating Flange Kits

1.08 INTERFERENCE AND EXACT LOCATIONS

A. The Contractor shall coordinate and properly relate this work to the site and to the work of all trades. The general locations of the facilities are shown on the drawings. However, the Contractor shall visit the premises and thoroughly familiarize himself with all details of the work and working conditions, verify existing conditions in the field, determine the exact locations of existing pipelines and structures and advise the Engineer of any discrepancy that may prevent or hinder the specified work from being completed. The Contractor shall be solely responsible for location and marking underground structures so as to avoid damage during construction.

PART 2 - MATERIALS

2.01 GENERAL

A. All materials shall conform to the requirements set forth herein or as designated on the drawings, unless otherwise specified. All materials must be new, free from defects, and shall be of the best commercial quality for the purpose specified. The Contractor shall furnish all necessary items and accessories not shown on the drawings or specified herein, but which are required to fully carry out the specified intent of the work, without additional cost to the City.

2.02 MAGNESIUM ANODES

A. Magnesium Anodes: H-1 alloy with chemical composition and bare anode weight as indicated below.

B. Open Circuit Anode Potential –1.7 VDC versus copper-copper sulfate reference electrode.

C. Each anode shall conform to the following chemical composition:

1. Magnesium anodes shall be of the High Potential alloy with composition as indicated below. Each anode shall be cast with a steel core and the core shall protrude from one end and shall be of sufficient length to permit attachment of

a lead wire. Each anode shall conform to the following chemical composition and dimensions:

Chemical Composition	
Silicon	0.30% Max.
Aluminum	5.0 - 7.0% Max.
Manganese	0.15% Min.
Iron	0.03% Max.
Nickel	0.003% Max.
Copper	0.1% Max.
Zinc	2.0 - 4.0% Max.
Total Other Impurities	0.30% Max.
Magnesium	Balance

D. Bare Anode Dimensions:

Nominal Wt. Bare (lbs)	Height (inches)	Width (inches)	Length (inches)
17	3.5	3.75	25
32	5.5	5.75	20

E. Each anode shall be furnished with a lead wire attached to one end of the steel core, and the wire shall be of sufficient length to attach to the header cable as shown on the drawings. The wire shall be connected to the steel core by silver soldering, and the connection shall be mechanically secured before soldering. The entire connection shall be insulated with an electrical potting compound. The cable attached to the anode shall be No. 10 AWG, Type THHN or THWN stranded, single conductor copper.

F. The anode shall be prepackaged in a permeable cloth bag filled with a mixture of 75% ground hydrated gypsum, 20% powdered bentonite, and 5% anhydrous sodium sulfate. Backfill shall have a grain size so that 100% is capable of passing through a 100-mesh screen. The mixture shall be firmly packed around the anode within the cloth bag by means of adequate vibration so that the magnesium ingot is completely surrounded with a minimum 1 inch of backfill material.

G. Manufacturers, or approved equal

1. Corrpro Companies, Inc.
2. Farwest Corrosion Control Company

2.03 CABLES

A. Cables used for joint bonding shall be single conductor, stranded copper, Type CP, insulated for 600 volts with High Molecular Weight Polyethylene (HMWPE) in accordance with the requirements of ASTM D 1248, Type 1, Class C, Grade 5.

B. All cables for anodes and test stations shall be Type THHN or THWN, stranded, copper, sized as shown on the drawings, conforming to Federal Specification J-C-30. The color of the insulation shall be as indicated on the Drawings.

2.04 CABLE-TO-PIPE CONNECTIONS

A. All cable connections to the ductile iron pipe or fittings shall be accomplished utilizing an exothermic welding process such as "Cadweld" by Erico Products, Inc., "Thermoweld" by Continental Industries, Inc., or approved equal. Each cable shall be fitted with a copper sleeve for accomplishing the weld and cartridge, sleeves and molds for each weld shall be furnished by the same manufacturer. All materials for welding shall be sized and in accordance with recommendations in manufacturers' literature. Exothermic welds for the ductile iron fittings shall be made using the weld metal for cast iron pipe.

2.05 CABLE-TO-PIPE COATING MATERIAL

A. Coating material for cable-to-pipe connections shall be Handy Caps & primer as manufactured by Royston products or Propoxy 20 epoxy putty as manufactured by the Hercules Chemical Company or approved equal.

2.06 TEST STATION

A. Ground level test stations shall be Christy G5 traffic box with a cast iron lid as shown on the drawing. The cover shall be manufactured with "CP-TEST" markings for easy identification.

2.07 TERMINAL BOXES

A. Terminal Box: High impact molded Lexan plastic, Model "T-3" as manufactured by Tinker & Rasor, or approved equal. The test box shall be provided with sufficient hardware and binding post terminals for each cable as shown on the drawings. All test station hardware, including nuts, bolts and shorting straps shall be nickel-plated brass. Terminal Boxes for the anode test stations shall be supplied with 8 amp, 0.01 ohm shunts.

2.08 CABLE IDENTIFICATION TAGS

A. All cables in the terminal boxes shall be identified. The identification tags shall be white plastic "zip-tie" type straps with a plastic tab of sufficient size to allow the pipeline station to be written on the tab with a permanent felt tip marker.

2.09 CABLE WARNING TAPE

A. All buried test station and anode cables shall have plastic warning tape installed a minimum of 12 inches above the top of the cables for the entire buried length of the cables. The warning tape shall be 4 inches wide and shall be yellow with black lettering with the legend "CAUTION, CATHODIC PROTECTION CABLES BURIED BELOW" in 3 inches high lettering printed at a minimum of seven foot intervals along the entire buried length of the cable.

2.10 BITUMASTIC COATING

A. Coating for all buried bolts, nuts and metallic washers of the ductile iron pipe and the copper insulating corporation stops shall be Bitumastic 300M coal tar mastic coating, as manufactured by Carboline or approved equal.

2.11 POLYETHYLENE SHEETS FOR PIPE ENCASEMENT

A. The polyethylene sheets used for encasement of the ductile iron pipe and fittings shall be minimum 8-mils thick in accordance with AWWA C-105.

2.12 INSULATING FLANGES

A. Insulating flanges shall be installed to electrically isolate the water pipeline from existing pipelines or piping inside of the building. The insulating flange kit shall be suitable for water service, and shall comply with NSF-61, such as LineBacker 61 manufactured by PSI or Trojan G-10 w/EPDM seal manufactured by APS, suitable for wet and dry locations. Each insulating flange set shall consist of a full-face central gasket, a full-length sleeve for each flange bolt, and two insulating washers with two steel washers for each bolt. The full-face type central gasket shall be 1/8-inch thick sheet packing, having a dielectric constant of 300 volts per mil, minimum. Bolt sleeves shall be fabric reinforced phenolic resin or mylar and insulating washers shall be constructed of fabric reinforced phenolic resin. The complete assembly shall have an ANSI pressure rating equal to that of the flanges between which it is installed.

PART 3 - EXECUTION

3.01 GENERAL REQUIREMENTS

A. All materials, workmanship and installation shall conform to all requirements of the legally constituted authority having jurisdiction. These authorities include, but are not limited to, the latest revision of the State of California, Department of Industrial Relations, Division of Industrial Safety, Electrical Orders; The National Electric Code, General Construction Safety Orders of the Industrial Accident Commission; and all other applicable State, Contra Costa County, or Dublin San Ramon Service District standards and regulations. Nothing in the drawings or specifications is to be construed to permit work not conforming to these regulations and codes. Where larger size or better grade materials than required by these regulations and codes are specified, the specifications and drawings shall have precedence.

3.02 STORAGE OF MATERIALS

A. All materials and equipment to be used in construction shall be stored in such a manner to be protected from detrimental effects from the elements. If warehouse storage cannot be provided, materials and equipment shall be stacked well above ground level and protected from the elements with plastic sheeting or other method as appropriate.

3.03 ANODES

A. Anodes shall be installed in the trench horizontally or vertically in native soil, after excavation to proper depth, equal to the bottom of the pipeline or casing, a minimum of 3 feet from fittings and a minimum of 5 feet from the pipelines. Spacing between anodes shall be 5 feet (minimum) if multiple anodes are installed at a single test station location. Prior to placing anodes in the trench or hole, paper or plastic bags shall be removed, but the cloth bag shall remain around the anode. Care shall be exercised during installation to prevent damage to the cloth bag and loss of backfill material. After placing anodes in the trench, native soil, free of rocks and other foreign objects shall be placed around the anode to a minimum cover of one foot above the anode. Remainder of the trench shall

then be backfilled with native soil. During installation, anodes shall not be supported or handled by use of attached wires.

B. The size of anodes to be installed at each test station is designated on the drawings.

3.04 CABLES

A. Cables buried in the ground shall be installed in PVC conduit and shall be laid straight, without kinks. The cable shall have a minimum cover of 30 inches. Each cable run shall be continuous in length and free of joints or splices unless shown on the drawings. Care shall be exercised during installation to avoid punctures, cuts, and similar damage to insulation. Any damage to insulation will require replacement of the entire cable length. Backfill surrounding the cables shall be native soil free of foreign materials. Cable warning tape shall be installed 12-inches above the entire buried length of the cable.

3.05 CABLE-TO-PIPE CONNECTIONS

A. Cable-to-pipe connections to the ductile iron and steel pipe shall be installed in the manner and at the locations shown on the drawings. Coating materials shall be removed from the pipe surface over an area just sufficient to make the connections. The surface shall be cleaned to white metal by grinding or filing prior to welding the conductor. Grinding with resin-impregnated wheels shall not be allowed. The conductor shall be welded to the pipe by the exothermic process with a copper sleeve fitted over the conductor, and only sufficient insulation shall be removed from the conductor to allow placing in welding mold. After the weld has cooled, all slag shall be removed and the weld shall be tested with a sharp blow from a 22-ounce hammer to assure proper metallurgical bond. All defective welds shall be removed and replaced. All exposed surfaces of copper and steel shall be covered with a minimum thickness of 1/4 inch of insulating materials as shown on the drawings. The cable to pipe connections shall be tested with a low resistance ohmmeter by the Contractor and approved by the City's Agent prior to backfill. Cable to pipe connections backfilled prior to testing shall be rejected.

B. All exposed surfaces of copper and ductile iron or steel shall be cleaned of contaminants and covered with a minimum thickness of 1/4 inch of insulating materials as shown on the drawings. As an alternative the exposed metal and surrounding surface shall be cleaned of contaminants and coated with Royston Roybond 747 primer. After the primer has dried, the Royston Handy Cap shall be applied.

3.06 TEST STATIONS

A. Test stations shall be installed at locations designated on the drawings and at all anode installation locations. Leave a minimum of 18 inches of slack for each cable at each test station housing. Slack shall be that amount of wire which, when the cover is removed and the wire extended, protrudes beyond the opening of the box or enclosure. Strip insulation from the cable end to make metal-to-metal connection to each binding post of the terminal box. The terminal end of each cable shall be identified with the structure identification using the permanent cable identification tags. Test stations shall be installed in sidewalks or non-traffic areas for easy access for future testing.

3.07 JOINT BONDING

A. All non-welded rubber gasket joints, mechanical joints, flange joints and threaded joints shall be bonded with a HMWPE stranded copper cable sizes as shown on the drawings.

The overall length of the conductor shall permit maximum movement of the pipe joint without transferring any tensile stress to the cable, per pipe manufacturer's recommendations. The bonded pipe sections shall be tested for continuity, prior to backfilling.

3.08 FIELD COATING OF BURIED FLANGE HARDWARE

A. All buried nuts and bolts shall be coated with bitumastic prior to polyethylene encasement. After flange hardware is installed use wire brush, power brush or an abrasive cleaning pad to remove all loose material, dirt and grime from substrate to a minimum cleanliness of SSPC SP2. Apply Bitumastic coating liberally with a medium bristle brush to the extent that all surfaces are completely covered with no bare spots visually evident. Coat exposed surfaces of bolts, washers and nuts, giving special attention to the bottom-side surfaces. Follow the manufacturer's recommendations for drying times required before polyethylene encasement and backfill.

3.09 POLYETHYLENE ENCASEMENT OF PIPES AND FITTINGS

A. The buried ductile iron pipe, fittings, and flexible expansion joints shall be encased in minimum 8-mils thick polyethylene in accordance with AWWA C-105.

3.10 INSULATING FLANGED JOINTS

A. All insulating components of the insulating flanged gasket set shall be cleaned of all dirt, grease, oil and other foreign materials immediately prior to assembly. Bolt holes in mating flanges shall be properly aligned at the time bolts and insulating sleeves are inserted to prevent damage to the insulation. After flanged bolts have been tightened, each insulating washer shall be inspected for cracks or other damage. All damaged washers shall be replaced. After assembly, resistance between each bolt and flange shall be measured with an approved ohmmeter, and the minimum resistance shall be 50,000 ohms. Where the insulating joint is assembled in the shop and shipped as a unit, resistance shall be measured in the shop between the flanges and between each bolt and flange and shall meet the above requirements. In addition, the completed assembly shall be tested with a flange insulation tester such as Gas Electronics Model 601, or equal for the integrity of the insulation. In case where the insulating flange is assembled in the field the completed assembly shall be tested with a flange insulation tester such as Gas Electronics Model 601, or equal prior to acceptance

3.11 ENERGIZING AND TESTING

A. After installation of sacrificial anode system, and prior to paving, conduct testing to verify proper operation of the cathodic protection system. Testing shall be conducted by the Project Corrosion Engineer (JDH Corrosion Consultants, Inc. (925)927-6630). Any and all deficiencies shall be corrected by the Contractor at his cost and retested prior to final acceptance. All retesting shall be at the Contractor's expense.

END OF SECTION

SECTION 13112

TANK INTERNAL CATHODIC PROTECTION SYSTEM

PART 1 - GENERAL

1.01 SECTION INCLUDES

A. The Contractor shall furnish all materials, install all equipment and provide all labor necessary to complete the work shown on the drawings and/or listed below and all other work and miscellaneous items not specifically mentioned but reasonably inferred, including all accessories and appurtenances required for a complete system. The intent of the specification is to provide for a complete, functional cathodic protection system for the submerged interior surfaces of the steel tank for the City of Milpitas, Well Upgrade Program, McCandless Well Facility.

B. Work included in this section consists of all components of the cathodic protection system for the steel storage tank including magnesium anodes, cables, junction box, reference electrode and any other work necessary to complete the installation.

1. Coordinate the installation of new conduit, mounting channel for the test station, and drilled holes for the conduit entry and for access holes and bolts at the access holes with the coatings contractor.

2. Cathodic protection of the submerged portion of the tank interior surfaces.

3. Installation of magnesium anodes, cables, a reference cell, access hole covers, conduit, mounting channel, and anode test station.

4. Material submittals.

5. Coatings for conduit and repair of damaged coatings on the tank shell and roof.

6. Correction of all deficiencies.

C. Anodes, anode lead wires, header cables and conduit lengths shown on the plans are approximate only. Actual lengths are the responsibility of the Contractor and shall be based on installation requirements.

1.02 REFERENCED SECTIONS

A. The following Sections are referenced in this Section:

1. Section 01330 – Submittals

1.03 REFERENCES

A. This section contains references to the following documents. They are a part of this section as specified and modified. In case of a conflict between the requirements of this section and those of the listed documents, the requirements of this section shall prevail.

1. National Association of Corrosion Engineers (NACE):

a. SP-0196-2011 – Galvanic Anode Cathodic Protection of Internal Submerged Surfaces of Steel Water Storage Tanks

2. American National Standards Institute (ANSI):

a. C80.1-2015 – Electrical Rigid Steel Conduit, Zinc Coating

3. American Society for Testing and Materials (ASTM):
    a. D-1248-12 – Polyethylene Plastics Extrusion Materials for Wire and Cable
4. American Water Works Association (AWWA)
    a. C-652-11 – Disinfection of Water Storage Facilities
5. National Electrical Manufacturers Association (NEMA):
    a. 250-2008 – Enclosures for Electrical Equipment (1,000 V Maximum)
    b. TC-2-2013 – Electrical Polyvinyl Chloride (PVC) Conduit
6. National Sanitation Foundation (NSF):
    a. NSF/ANSI 61-2013 – Drinking water system components - Health effects
7. Underwriter's Laboratories, Inc. (U.L.):
    a. 6-2007 – Electrical Rigid Metal Conduit - Steel
    b. 83-2014 – Thermoplastic - Insulated Wires and Cables
    c. 510-2005 – Polyvinyl Chloride, Polyethylene and Rubber Insulating Tape
    d. 514A-2013 – Metallic Outlet Boxes

1.04 SUBMITTALS

A. Submittals shall be furnished in accordance with Section 01330

1. A complete list of cathodic protection equipment and material, including name and manufacturer, catalog number, size, finish and any other pertinent data necessary for proper identification and to determine conformance with specifications.
2. Certification by the cable manufacturer, covering conformance of cable insulation to the designated specification.
3. A certified test report showing the chemical analysis of all anodes.
4. System warranty pursuant with Paragraph 1.09.
5. Coating manufacturer’s data sheet for each product to be used along with instructions and recommendations for surface preparation and coating application for galvanized steel surfaces as well as for touchup of steel surfaces.
6. Material safety data sheet for each field applied coating product used.
7. Sanitization procedure for all items entering the inside of the tank.
8. Proposed installation schedule.

B. Contractor shall receive written approval of submittals, prior to beginning installation.

1.05 QUALITY ASSURANCE

A. All work shall be performed to the satisfaction of the Engineer.

B. The Contractor shall not substitute for the specified materials unless approved by the Engineer.

C. Use only new, highest quality cathodic protection components, and standard products from a manufacturer regularly engaged in the production of such material or equipment.

D. All materials in contact with the water or exposed to the interior of the tank shall be classified in accordance with ANSI/NSF 61 “Drinking Water Systems Components.”

E. Cathodic protection components shall be subject to testing by the City’s Engineer to ensure proper installation and operation. The Contractor shall be responsible for correction of all deficiencies identified by the testing and all costs incurred for retesting prior to final acceptance.

1.06 DELIVERY STORAGE AND HANDLING

A. All materials and equipment to be used in construction shall be stored in such a manner to be protected from detrimental effects from the elements. If warehouse storage cannot be provided, materials and equipment shall be stacked well above ground level and protected from the elements with plastic sheeting or other method as appropriate.

B. Replace any damaged anodes, and any damaged lead wires.

1.07 CONTRACTOR QUALIFICATIONS

A. The cathodic protection installer shall have a minimum of five (5) years’ experience installing and servicing the types of system described in this specification. The system shall be installed by the cathodic protection installer with staff, trained in the installation of waterworks and related cathodic protection systems.

B. All personnel shall be subject to Federal Substance Abuse and Testing Regulations.

1.08 PROJECT CONDITIONS

A. The Contractor shall coordinate and properly relate this work to the site and to the work of all trades. The general locations of the facilities are shown on the drawings. However, the Contractor shall visit the premises and thoroughly familiarize himself/herself with all details of the work and working conditions, verify existing conditions in the field, determine the exact locations of existing structures and advise the Engineer of any discrepancy that may prevent or hinder the specified work from being completed.

1.09 WARRANTY

A. The system will be energized for its permanent system activation following the one-year warranty coating inspection. The system warranty shall be no less than one year after permanent system activation and shall include all costs for repair, parts and labor.

PART 2 - PRODUCTS

2.01 GENERAL

A. All materials shall conform to the requirements set forth herein or as designated on the drawings, unless otherwise specified. All materials must be new, free from defects, and shall be of the best commercial quality for the purpose specified. The Contractor shall furnish all necessary items and accessories not shown on the drawings or specified herein, but which are required to fully carry out the specified intent of the work, at no additional cost to the City.

2.02 MAGNESIUM ANODES

A. Galvanic anodes shall be high potential, extruded, magnesium with a diameter of 1.3-inches, length and weight as shown on the drawings. Each anode shall be cast with a 1/8-

inch diameter steel core. The steel core for the tank interior anodes shall protrude from one end and shall be of sufficient length to permit attachment of a lead wire.

B. Each anode shall conform to the following chemical composition:

1. Chemical Composition

Aluminum	0.010% Max.
Manganese	0.5-1.3% Max.
Iron	0.03% Max.
Nickel	0.001% Max.
Copper	0.02% Max.
Total Other Impurities	0.30% Max.
Magnesium	Balance

C. Anode Lead Wire: No. 10 AWG/HMWPE crimped and soldered to the 1/8-inch steel core, making a mechanically secure connection

D. Soldered Connection and Core: Seal entirely with heat shrink sleeve and cap.

2.03 CABLE

A. Anode cable: Stranded single conductor copper, #10 AWG/HMWPE.

B. Anode header cable: Stranded single conductor copper, # 8 AWG/HMWPE.

C. Reference Electrode Lead Wire: Stranded single conductor copper, No. 14 AWG/RHH-RHW or HMWPE with color as indicated on Drawings.

D. Reference Electrode Header Wire: Stranded single conductor copper, No. 14 AWG/THHN or HMWPE with color as indicated on Drawings.

E. Control cable: Stranded single conductor copper #12 AWG/THHN or HMWPE with color as indicated on Drawings.

F. Drain cable: Stranded single conductor copper, #8 AWG/HMWPE.

2.04 REFERENCE ELECTRODE

A. The permanent reference electrode used to measure the tank-to-water potential shall be designed to remain stable in a continuous immersion in the water for a minimum of 10 years with only minimal maintenance as recommended by the manufacturer. The reference electrode shall be a copper/copper-sulfate type of reference electrode and shall have a potential drift of less than 10 mV.

B. The permanent reference electrode shall be equipped with a 4-inch diameter plastic bumper.

1. STAPERM, Model CU-2-FW as manufactured by GMC

2. Permacell Model 801, as manufactured by Corrpro Companies Inc.

3. Reference electrode lead cable per Paragraph 2.03.C.

4. Approved equal

2.05 GALVANIZED STEEL CONDUIT AND FITTINGS:

A. Conduit and fittings shall be hot-dipped galvanized steel and shall conform to ANSI Specification C80.1 for Rigid Metallic Conduit.

2.06 ANODE SUSPENSION SYSTEM:

A. The anodes shall be suspended vertically from the roof of the tank as shown on the drawings. Hand hole covers and mounting devices shall be provided so the anodes may be replaced or inspected without entering the tank. The hand hole assemblies shall consist of a 5-inch diameter hole and a 6-inch diameter stainless steel cover plate, rubber grommet and a stainless steel clamping bar held in place by a 1/2-inch stainless steel bolt and nut. Hand holes shall be cut before the tank is coated. Clevis assembly shall be stainless steel with stainless steel fasteners as shown on the drawings.

2.07 ANODE METERING SHUNT:

A. The anode metering shunt shall be 0.1 ohm, 6 amp capacity with 1 percent accuracy.

2.08 CURRENT ADJUSTING RHEOSTAT:

A. A current adjusting rheostat shall be provided in the anode test station as shown in the drawings. The rheostat shall be rated for 100 ohm/100 watts.

2.09 CABLE SPLICING MATERIALS

A. Insulation of Splices: Buried splices shall be sealed with an inner wrap of rubber splicing tape such as Scotch 130C or equal and an outer wrap of PVC tape such as Scotch 33+ or approved equal.

B. Wire Connectors: One-piece, tin-plated crimp-on lug connector or two copper split bolt connectors as manufactured by Burndy Co., Thomas and Betts. No steel hardware is allowed.

2.10 ANODE TEST STATION:

A. The anode test station shall be a NEMA Type 4X, fiberglass reinforced plastic (FRP) box. The box shall have stainless steel or fiberglass hinges. The test station shall be sized to accommodate the layout as shown in the drawings. A cathodic protection potential/anode current voltmeter shall have a push to read button connecting the permanent reference cell to the digital voltmeter with an internal resistance of not less than 10 megaohms-volt and a reading of not less than a 100 watt 100 ohm, connected between the anode header cable and the structure lead wire. The test station shall have a calibrated 0.1 ohm shunt placed in the anode circuit and shall be connected to a potential meter via a push to read switch so the anode current output can be indicated on the test station digital voltmeter with a reading of not less than 1.99 amps. The system ground shall be #8 AWG stranded copper HMWPE insulation. The potential test circuit shall have an independent structure ground of AWG #12 stranded copper cable per Paragraph 2.03.E.

1. Sacrificial Anode Control Panel, as manufactured by Corrpro Companies Inc.

2. Junction Box, Sacrificial Anode Type, as manufactured by Integrated Rectifier Technologies, Inc.

3. Approved equal

2.11 COATING MATERIALS:

A. Coating materials for coating repairs shall match the existing coating and be sealed in containers that plainly show the designated name, formula or specification number, batch number, color, date of manufacture, manufacturer's directions and name of manufacturer, all of which shall be plainly legible at the time of use.

2.12 CABLE-TO-STRUCTURE CONNECTION:

A. Exothermic welding

1. The structure cable connection to the steel tank may be accomplished utilizing an exothermic welding process as shown on the drawings. Each cable shall be fitted with a copper sleeve for accomplishing the weld and cartridge, sleeves and molds for each weld shall be furnished by the same manufacturer. All materials for welding shall be sized and in accordance with recommendations in manufacturers' literature.

2. Manufacturers, or equal

a. "Cadweld" by Erico Products, Inc.,

b. "Thermoweld" by Continental Industries, Inc.

B. Pin brazing

1. The structure cable connection to the steel tank may be accomplished by pin brazing. Pin brazing equipment based upon Electric-arc silver soldering using a specially designed portable Pin Brazing unit, a hollow brazing pin containing silver solder and flux shall be utilized for cable-to-structure connections. The unit may be battery powered or powered with a welding generator. Battery pack, pins with fuse wire, ceramic ferrules and cable lugs shall be in accordance with the manufacturer's recommendations for each wire size and pipe or fitting size and material. Brazing materials and equipment shall be the product of a single manufacturer. All material and equipment utilized for brazing shall be from one manufacturer.

a. BAC - GMC Electrical, Ontario, CA.

b. Farwest Corrosion Control, Hayward, CA.

2.13 CABLE-TO-TANK CONNECTION COATING MATERIAL:

A. Epoxy shall be used for sealing the cable to tank connections.

B. Manufacturers, or equal

1. ProPoxy® 20, manufactured by Hercules

2. Aquatapoxy® A-6, manufactured by Cohesant Materials

3. Durcon-164, by Duriron Company

4. Scotchcast Resin No. 4, by 3-M Company

5. CC-1 Potting Compound, by PSI Products.

PART 3 - PRODUCTS

3.01 GENERAL

A. All materials, workmanship and installation shall conform to all requirements of the legally constituted authority having jurisdiction. These authorities include, but are not limited to, the latest revision of the State of California, Department of Industrial Relations, Division of Industrial Safety, Electrical Orders; The National Electric Code, General Construction Safety Orders of the Industrial Accident Commission; and all other applicable State, County, or City codes and regulations. Nothing in the drawings or specifications is to be construed to permit work not conforming to these regulations and codes. Where larger size or better grade materials than required by these regulations and codes are specified, the specifications and drawings shall have precedence.

3.02 MATERIAL DELIVERY, STORAGE AND PROTECTION

A. All materials and equipment to be used in construction shall be stored in such a manner to be protected from detrimental effects from the elements. If warehouse storage cannot be provided, materials and equipment shall be stacked well above ground level and protected from the elements with plastic sheeting or other method as appropriate.

3.03 DISINFECTION:

A. The tank is operational and is full of potable water. Special care shall be exercised in order to prevent any foreign material from falling inside the tank during installation. All tools and materials introduced into the tank shall be disinfected according to AWWA C652-11.

3.04 CABLE-TO-STRUCTURE CONNECTIONS

A. Exothermic welded connections

1. Cable-to-tank connections shall be installed in the manner and at the locations shown on the drawings. Coating materials shall be removed from the tank surface over an area just sufficient to make the connections. The surface shall be cleaned to white metal by grinding or filing prior to welding the conductor. Grinding with resin impregnated wheels shall not be allowed. The conductor shall be welded to the tank chime by the exothermic process with a copper sleeve fitted over the conductor, and only sufficient insulation shall be removed from the conductor to allow placing in welding mold. After the weld has cooled, all slag shall be removed and the weld shall be tested with a sharp blow from a 22 ounce hammer to assure proper metallurgical bond. All defective welds shall be removed and replaced. All exposed surfaces of copper and steel shall be covered with a minimum thickness of ¼ in. of insulating materials.

B. Pin brazed connections

1. Cut wire with a wire cutter to prevent deforming the wire ends. Do not deform the wire. Remove only enough insulation from the wire to allow the brazed connection to be made. The surface of the steel structure shall be ground or filed to a bright, shiny, clean and dry surface before brazing the wire connection. The attachment of the wire to the structure shall be made as indicated on the drawings. The wire is to be held at a 90 degree angle to the surface when brazing. Only one wire is to be attached with each braze. All wire to structure braze shall be a minimum of 6 inches apart. As soon as the braze has cooled, the brazed

connection shall be tested for strength by striking a sharp blow with a two-pound hammer while pulling firmly on the wire. All unsound brazed connections are to be redone and retested. Assure that the area to be coated is thoroughly cleaned by wire brushing. All exposed surfaces of copper and steel and surrounding surface shall be cleaned of contaminants and covered with a minimum thickness of 1/4-inch of insulating materials.

3.05 ANODE TEST STATION

A. Test stations shall be installed at locations designated on the drawings. Exact location of test station shall be determined in the field. The terminal end of each cable shall be identified with the structure identification using the permanent cable identification tags. The test station shall be located on the exterior of the tank next to the tank sample ports for convenient operator serviceability approximately 4 feet off the ground.

3.06 MAGNESIUM ANODES

A. The magnesium anodes shall be suspended vertically from the tank roof as shown in the drawings. The hand holes shall be cut into the tank roof. After cutting the holes in the roof, burrs and sharp edges of the hole shall be removed by grinding. Care shall be taken to minimize damage to the tank coating. The cut edges of the roof holes shall be repaired prior to coating of the tank.

3.07 CABLE SPLICES

A. Anode to header cable splices shall be with a proper sized Thomas & Betts C tap crimp connector or two copper split bolts. The connections shall be double half wrapped with rubber filler tape and then wrapped with not less than a double half wrap of quality electrical tape. The splices shall be made in such a way as to insure against moisture intrusion.

B. All splices shall be located above the high water line.

3.08 SYSTEM START UP

A. After the system is installed and the tank is filled, the cathodic protection installer shall provide start-up service which includes energizing, testing, and adjusting the system for optimum performance of the cathodic protection system. This start-up service shall be coordinated with the City or his representative. Contractor shall contact the City in writing 7 days before planned start-up of the Cathodic Protection system so the City can have the City's Corrosion Engineer at the start-up to verify test measurements and proper system operation.

B. The system shall be tested by a State of California Registered Professional Corrosion Engineer, retained by the Engineer, to assure conformance with the specifications. Testing shall include proper installation of the anodes, cables and test stations, and potential measurements on protected surfaces of the tank. Protection levels shall satisfy the criteria per NACE Standard SP-0196-2011. Upon completion of the tests, a detailed written report shall be submitted describing any deficiencies detected. Any and all deficiencies shall be corrected by the Contractor at his/her cost and retested prior to final acceptance. All retesting shall be at the Contractor's expense.

C. Once the cathodic protection system is checked and certified by the Project's Corrosion Engineer (JDH Corrosion Consultants, Inc. (925)927-6630), the system shall be de-

energized and remain off until the one-year warranty coating inspection is completed. After the warranty inspection the system shall be re-energized and tested by the City's Corrosion Engineer to ensure adequate protection of the tank internals per relevant NACE standards.

END OF SECTION

(THIS PAGE LEFT BLANK INTENTIONALLY)

SECTION 13208

WELDED STEEL TANK

PART 1 - GENERAL

1.01 SECTION INCLUDES

A. Furnish all labor, material, equipment, tools and services required for the design, fabrication, erection, painting and testing of a ground level, welded steel water storage tanks, and accessories.

1.02 REFERENCED SECTIONS

A. The following Sections are referenced in this Section

1. Section 01330 – Submittals
2. Section 01560 – Environmental Controls
3. Section 03600 – Grout
4. Section 09960 – High Performance Coatings
5. Section 11500 – Disinfection
6. Section 13112 – Tank Internal Cathodic Protection System

1.03 SUBMITTALS

A. Comply with Section 01330.

B. Product Data:

1. Hangers, pipe and equipment supports.
2. High-strength bolts.
3. Stainless steel items.
4. Manufactured items, including access hatches, vents and safety devices.
5. Erection plan.
6. Electrode manufacturer's data.

C. Shop Drawings:

1. Fabrication and erection drawings for steel tanks, foundations and accessories indicating size and thickness of members including anchor bolt layout and embedment and details, assembly drawings, and welding details. Show detail dimensions and quantities and details of construction and erection as prepared by the tank manufacturer. Detailed drawings for the tanks and accessories signed and stamped by a Civil or Structural Engineer licensed to practice in the state where the tanks will be constructed.
2. Design calculations for tanks and accessories.
3. Depth versus volume calibration table for the tanks in units of inches, feet and gallons.

D. Structural Calculations:

1. A single complete set of structural calculations for each welded steel tank, ringwall foundation, and roof signed and stamped by a registered professional Civil or Structural Engineer licensed to practice in the state where the tank will be constructed. Submit calculations for tank shell, shell thickness, compressive stress in each ring under wind or earthquake loading combined with dead and water load. Submit calculations for welded joints.

2. Submit calculations for the amount of reinforcement for openings in the tank shell or floor including pipe connections and manholes.

E. Manufacturer's Certifications:

1. Tank design, including welded joint details and inspection personnel data.

2. Tank fabrication, including mill tests and shop inspection report.

3. Tank erection, including field inspection and testing report.

F. Quality Assurance:

1. Welder performance qualification test records "welders certification".

2. Written Welding Procedure Specifications (WPSs) in accordance with AWS D1.1 requirements for each different welded joint proposed for use whether prequalified or qualified by testing.

3. Procedure Qualification Record (PQR) in accordance with AWS 1.1 for all procedures qualified by testing.

1.04 DESIGN REQUIREMENTS

A. Tank design and manufacture shall be in accordance with the latest editions of the following standards and codes, as well as the criteria noted on the Drawings.

1. American Water Works Association (AWWA) D100, Welded Steel Tanks for Water Storage;

2. American Petroleum Institute (API) 60, Welded Steel Tanks for Oil Storage;

3. California Building Code (CBC); and

4. California Code of Regulations (CCR), Title 8: Industrial Safety.

B. Seismic Requirement: The tank shall be a mechanically anchored tank which has either anchor bolts or anchor straps to anchor the tank to the foundation. Self-anchored tanks that rely on the inherent stability of the self-weight of the tank and contents to resist overturning forces shall not be permitted.

C. Design Criteria

1. Seismic design: Determine seismic loads based on the coefficients provided in AWWA D100-05, Section 13, and 2010 CBC, and also site-specific response spectra. Refer to Drawings:

a. Apply horizontal and vertical accelerations simultaneously.

b. Hoop stress combination: Root mean square method.

c. Pressure stability: Check with tank full and empty.

2. Tank anchor system: Resist tension from seismic overturning moment (AWWA D100 equation 13.8), without any reduction for vertical loads.

   a. Design anchors for 1/3 stress increase over basic allowable stress.

   b. Design anchor connections at basic allowable stresses.

3. Construction loads: Distribute roof concentrated loads so the specified uniform live load is not exceeded. Provide roof shoring where necessary.

4. Roof

   a. Minimum thickness 3/16-inch.

   b. Design purlins and rafters for seismic water sloshing where it will occur.

   c. Provide continuous fillet welds all around lapped surfaces at all purlin and rafter connections and beam supports.

   d. Paint contact surfaces between roof plates and rafters.

5. Roof Supports

   a. Designed in accordance with AISC (ASD).

   b. Pipe or tubular columns, hermetically sealed.

   c. Roof rafters shall be placed above the top capacity level.

   d. Paint contact surfaces between roof plates and rafters.

6. Corrosion Allowance: 1/16-inch.

7. Roof-to-Shell Joint

   a. For cone roofs with knuckle joint provide butt-welded joint at the base of the knuckle and continuous fillet welded lapped plates, both inside and outside, at the top of the knuckle. The remainder of the roof plates shall be welded on the top-side only with a continuous full-fillet weld on all seams.

8. Shell Circumferential Joints

   a. Complete penetration butt-welded joints.

   b. Vertical joints in adjacent shell courses shall not be in alignment.

9. Column Bases: Design to distribute column load plus water pressure on plating without exceeding soil bearing pressure.

10. Bottom Plates

    a. Bottom plate thickness shall be in accordance with AWWA D100 plus 1/8-inch.

    b. Bottom plate joints shall be lap-welded on the top side only with a continuous full-fillet weld on all seams.

1.05 QUALITY ASSURANCE

A. General:

1. Demonstrate that the tank manufacturer has been regularly designing, fabricating and erecting similar welded steel tanks for at least 10 years.

2. Stamp and sign all shop drawings, calculations and welded joint details by a Civil Engineer registered in the state where the tank will be installed.

3. Supply all new materials and fabricated items.

4. Verify adequacy of tank foundation.

5. The Contractor is responsible for preparing and submitting written Welding Procedure Specifications (WPSs). WPSs for each joint type shall indicate proper AWS qualification and be available where welding is performed. WPSs shall be included with any shop drawings referencing welds. WPSs shall include the manufacturer and specific electrode.

B. Testing Program:

1. Qualification of Weld Procedures: AWWA D100.

2. Qualification of Welders: AWWA D100.

3. Shop and Field Weld Inspection: AWWA D100. If Section 14 applies, retain a Certified Welding Inspector.

4. Weld Inspection Procedures: AWWA D100.

5. Tank Bottom Weld Testing: AWWA D100.

6. Tank Water Tests: AWWA D100.

PART 2 - PRODUCTS

2.01 TANK

A. Material: Verify that satisfactory mill test reports are available on all steel.

B. Fabrication

1. In accordance with AWWA D100.

2. Fabricate and assemble in the shop to the greatest extent possible.

3. Shape all members correctly, with no kinks, twists, dents or other blemishes prior to erection. Evenly spring all curved work.

4. Make exposed edges free of burrs and sharp edges. Make corners rounded or chamfered.

5. Shop prime all steel items that are not galvanized or epoxy-coated, with material that is compatible with the finish coat.

6. Stainless Steel Items:

a. Use the proper type of stainless steel electrodes or welding rods complying with AWS D10.4.

b. Remove by grinding and polishing, all scratches, marks, pits and other blemishes on exposed surfaces.

c. Use grinding wheels and other tools that have never been used on carbon steel.

C. Report: Provide a shop inspection report including mill tests, radiographs, and inspection records, before tank erection is started.

D. Welding

1. Verify welders are qualified.

2. Verify that weld procedures are followed.

E. A tank bearing pad shall be installed on top of the concrete encasements and column foundations as shown on the Drawings. The bearing pad shall consist of asphalt impregnated cellular fibers and shall be Fibre Expansion Joint as supplied by W.R. Meadows, Inc. or approved equal.

F. Nonshrink, non-metallic grout shall be installed on top of the concrete ringwall foundation beneath the tank bottom plates as shown on the Drawings. The nonshrink, non-metallic grout shall be per Section 03600.

2.02 TANK ACCESSORIES

A. General: Provide each tank complete with all pipe connections, access openings, nozzles, taps, drains and other accessories as shown on the Drawings or required herein. All accessories shall conform to the AWWA D100 and as specified.

B. Stainless Steel Items: Provide AISI Type 304 material, unless Type 316 is specifically specified.

C. Shell Manholes: Two 30-inch-diameter manholes per tank located in the shell and centered 36 inches above the tank bottom. Provide suitable means to hold the manhole covers in the open position. Hinge shall be loose, so that easy bolting is possible. Hot-dip galvanize after fabrication.

D. Piping and Pipe Connections

1. Nozzle Connections: (Larger than 2-inch)

a. Pipe: ASME A53 Schedule 40

b. Flanges: AWWA C207, Class B

2. Nozzle connection: (2-inch and smaller): Forged steel 3000# Full Coupling, threaded ASME B16.11.

3. Accessory Piping:

a. Pipe: ASME A53 Schedule 40

b. Fittings: Fittings per AWWA C208 fabricated from pipe sections of Item 1, above, except that elbows shall be wrought steel, standard weight, long radius (R=1.5 D) per ASTM A234 unless otherwise noted on Drawings.

c. Flanges: AWWA C207, Class B

4. Lining: Liquid Epoxy, AWWA C210

5. Coating

a. Internal Piping: Liquid Epoxy, AWWA C210.

b. External Piping: Section 09960.

E. Vents

1. Provide 2-foot-diameter, welded steel center roof vent with screened opening, removable top.

2. Provide and design perimeter roof vents for a maximum tank inflow/outflow of 1,500 gpm.

3. Provide screens over all vents. Manufacturer shall verify that adequate venting is provided to equalize pressure and prevent buckling of the tank. Screens shall be designed to pop out into the interior of the tank if the internal tank pressure becomes large enough to cause buckling of the tank shell. Maximum tank in/out flow for venting design is noted above.

4. The screen shall consist of an 18 x 18 Type 316 stainless steel mesh, 0.017 wire diameter or favorably reviewed equal.

F. Zinc Coatings

1. Bolts, Washers and Nuts: Electrodeposited zinc-coated to conform to ASTM B633.

2. Other Galvanized Items: Hot-dipped zinc-coated to conform to ASTM A123.

G. Miscellaneous

1. Provide connection in drain connection for level (pressure) transmitter.

2. Provide cathodic protection for the tank. See Drawings and Section 13112.

PART 3 - EXECUTION

3.01 PREPARATION

A. Develop a written erection plan and welding sequences for the tank's bottom, side shell, and roof plating.

B. Develop this plan and sequences to minimize welding distortions and kinks between plates.

C. Furnish this plan and sequences to the erection crew.

3.02 ERECTION

A. AWWA D100 and also:

1. Comply with erection plan and welding sequences.

2. Follow qualified weld procedures.

3. Use qualified welders.

4. Provide complete penetration butt welds at all side shell joints.

5. Remove all evidence of any welding of temporary erection devices.

6. Stainless steel items:

a. Use the proper type of stainless steel electrodes or welding rods complying with AWS D10.4.

b. Remove by grinding and polishing, all scratches, marks, pits and other blemishes on exposed surfaces.

c. On stainless steel items, do not use grinding wheels and other tools that have previously been used on carbon steel.

3.03 FIELD QUALITY CONTROL

A. AWWA D100, and also:

1. Provide 24 hours notice of all testing to Engineer.

2. Provide all testing equipment and satisfactory access to the work being inspected.

3. Perform and evaluate all radiographs promptly, so any repairs can be made and re-evaluated without delay of the erection.

4. The Engineer will be the sole judge of compliance with the quality of work specified herein or in AWWA D100.

5. Repair all leaks and retest by the same method that discovered the leak.

B. Tank Welding:

1. If AWWA D100 Chapter 14, Alternative Design Basis, applies retain a Certified Welding Inspector to be present during all inspections and testing and to specify the test locations.

2. Inspection by trepanning, air carbon arc gouging and removal of sectional segments will not be permitted.

C. Tank Bottom: Test all joints by the vacuum method after erection and prior to painting.

D. Tank Bottom and Side Shell: Test by the water method, after erection and prior to painting. The City will provide the water.

E. Report: Provide a field inspection report, including radiographs and inspection records before acceptance of each tank by the City.

3.04 PAINTING

A. Perform interior and exterior cleaning, preparation, and painting in accordance with AWWA D102, Section 09960 and as noted below:

1. Paint top surfaces of all purlins, rafters, beams and all other roof structural members prior to roof plate installation.

2. Paint lower side of roof plates prior to installation.

3. Caulk all unwelded roof plate and structural member lap, prior to painting.

3.05 DISINFECTION

A. After protective coatings have been applied and accepted, disinfect the interior of each tank's surfaces in the presence of the Engineer in accordance with the requirements of AWWA C652 and Section 11500.

3.06 DISPOSAL OF TEST WATER

A. Water used for testing shall be disposed of as required by Section 01560.

END OF SECTION

SECTION 13216

CHEMICAL STORAGE TANKS

PART 1 - GENERAL

1.01 SECTION INCLUDES

A. Provide complete, tested, single-walled tanks for chemical storage indoors, as shown on the Drawings and specified herein.

B. Equipment List

1. Sodium Hypochlorite Day Tank: T410
2. Ferric Chloride Day Tank: T420
3. Ammonium Sulfate Day Tank: T430

1.02 REFERENCED SECTIONS

A. The following Sections are referenced in this Section:

1. Section 01330 – Submittals
2. Section 01610 – Seismic Anchorage and Bracing
3. Section 01999 – Reference Forms
4. Section 10200 – Safety and Signage
5. Section 16940 – Instrumentation

1.03 SUBMITTALS

A. Comply with Section 01330.

B. Submit the following items:

1. Evidence of manufacturer's experience.
2. Shop Drawings: Submit the following items as a single, complete submittal with any proposed changes to the specified requirements stated in writing.
    a. Materials of Construction:
        1) Resin manufacturer data sheet.
        2) Hoop stress data for resin as determined by ASTM D2837.
        3) Fitting material.
        4) Gasket style and material.
        5) Bolt material.
    b. Dimensioned Tank Drawings
        1) Location, size, and orientation of fittings, manway openings, and accessories.
        2) Details of seismic restraint system including locations of anchor bolts in foundation.

3) Details of construction of inlet and outlet fittings, manways, and other accessories. Include materials of construction.

3. Product Data: Submit manufacturer's standard literature describing products provided with the storage tank.

4. Structural Calculations:

   a. Tank Restraint System Calculations: Stamped and signed by a civil or structural engineer registered in California.

   b. Tank Wall Thickness Calculations: Submit calculations based on methodology required by ASTM D1998.

5. Manufacturer's installation instructions.

6. Operations and maintenance information.

7. Factory test reports

8. Manufacturer's warranty.

9. Completed Manufacturer's Installation Certification Form (Section 01999).

1.04 DESIGN REQUIREMENTS

A. Tank Design Criteria

Criteria	T410	T420	T430
Number	1	1	1
Chemical Service	Sodium Hypochlorite	Ferric Chloride	Ammonium Sulfate
Chemical Concentration	12.5%	40%	39%
Specific Gravity of Stored Fluid	1.20	1.40	1.22
Tank Type	Single Wall, Vertical, Closed-Top	Single Wall, Vertical, Closed-Top	Single Wall, Vertical, Closed-Top
Tank Resin	XLHDPE	XLHDPE	XLHDPE
Liner	None	None	None
Tank Color	Natural White	Natural White	Natural White
Nominal Volume	155	30	55
Diameter (maximum)	2 feet - 7 inches	1 foot - 11 inches	1 foot - 11 inches
Overall Height	4 feet - 9 inches	2 feet - 2 inches	3 feet - 3 inches
Exposure	Indoor	Indoor	Indoor
Chemical Temperature (maximum)	100°F	100°F	100°F
Ambient Temperature (maximum)	100°F	100°F	100°F

B. Materials

1. All tank components shall be compatible with the stored chemicals.

C. Tank Shell Thickness

1. Determined in accordance with ASTM D1998.

2. Maximum allowable hoop stress used in wall thickness calculations: Base on test data developed in accordance with ASTM D2837.

3. Wall thickness shall assume contents have a specific gravity not less than 1.4.

4. Increase tank shell thickness at fittings and connection points for mounting equipment such that tank wall deflection and damage does not occur.

D. Tank Restraint System

1. Restrain tanks in accordance with the seismic and wind load design requirements specified in Section 01610.

2. Design tank restraint system to meet the requirements of the Building Code that is in effect for the project location.

1.05 QUALITY ASSURANCE

A. Products of the same material furnished under this Section shall be supplied by a single manufacturer regularly engaged in the design and manufacture of chemical storage tanks for a minimum of 10 years with a satisfactory performance record. Demonstrate to the Engineer's satisfaction that the quality is equal to the tanks made by the manufacturers named herein.

B. Comply with Standard Specification for Polyethylene Upright Storage Tanks, ASTM D1998, except as modified herein.

C. Comply with the following regulatory standards:

1. Uniform Fire Code, especially Article 80, Hazardous Materials, with local amendments, if any.

2. California Building Code.

D. Tanks shall be manufactured from new materials and shall not be stored for more than 3 months prior to delivery.

E. Tanks shall be free of visual defects, air bubbles, crazing and cracking. Trim and smooth cut edges of openings into the tank.

1.06 MANUFACTURER'S WARRANTY

A. Provide three (3) year full replacement warranty.

PART 2 - PRODUCTS

2.01 MANUFACTURER

A. Poly Processing Company;

B. Snyder Industries;

C. Or equal.

2.02 POLYETHYLENE STORAGE TANKS

A. Rotationally-molded, one-piece seamless construction, cylindrical in cross-section, manufactured in accordance with ASTM D1998.

B. Tanks shall be certified NSF/ANSI 61 compliant for chemical storage for drinking water applications.

C. Resin: Use 100 percent virgin polyethylene with ultraviolet stabilizer meeting or exceeding the following properties:

Property	XLHDPE	ASTM Test
Density, gm/cc	0.938-0.944	D1505
Environmental Stress Cracking Resistance, F50, hours, 100% Igepal	>1,000	D1693
Tensile Strength @Yield, psi, 2-inch/minimum	3,000	D638 Type IV Specimen
Elongation at Break, %, 2-inch minimum	>300	D638 Type IV Specimen
Vicat Softening Point, °F	250	D1525
Flexural Modulus, psi	100,000	D790

2.03 TANK FITTINGS AND ACCESSORIES

A. Fittings and Accessories Schedule

Tank Number Stored Chemical	T410 Sodium Hypochlorite	T420 Ferric Chloride	T430 Ammonium Sulfate
Fittings	Size	Size	Size
Fill	1.25 inch	1.25 inch	1.25 inch
Outlet (to Pump)	1 inch	1 inch	1 inch
Drain	2 inch	2 inch	2 inch
Overflow	2 inch	2 inch	2 inch
Vent	2 inch	2 inch	2 inch
Manway	7 inch (min.)	7 inch (min.)	7 inch (min.)
Level Sensor	Note (a)	Note (a)	Note (a)
Accessories	Quantity	Quantity	Quantity
Label	Note (b)	Note (b)	Note (b)
Level Indicator	1[(c)]	1[(c)]	1[(c)]
Level Switch	2[(a)]	2[(a)]	2[(a)]

(a) Provide a high-high level switch and a low-low level switch for the tank. Coordinate with the level switch supplier on fitting size, type, and method of attachment.

(b) See Section 10200 for require labels and safety signage.

(c) Provide a weigh scale with level transmitter for monitoring the liquid level in the tank.

B. Materials

Chemical	Fitting Material	Gasket Material	Bolt Material
Sodium Hypochlorite	PVC	Viton	Hastelloy C
Ferric Chloride	PVC	EDPM	Hastelloy C
Ammonium Sulfate	PVC	EDPM	Hastelloy C

C. Fittings and Connections

1. Fill and Overflow

a. Threaded bulkhead compatible with connecting piping.

b. Fittings installed on top of sloping tank surface shall be made vertical.

2. Drain and Outlet

a. Bolted double flange fittings with two 150-lb flanges.

b. Use bolts with internal polyethylene injection molded encapsulated heads compatible with the chemical stored.

3. Vent

a. Compression type bulkhead fitting with U-bend outlet.

4. Manway

a. Minimum 7-inch manway opening.

b. Provide threaded cap with gasket.

5. Flexible Connections

a. Provide expansion joints on tank fittings to absorb tank expansion and contraction and isolate vibration and shock that could damage tank.

6. Gaskets

a. Thickness: 1/4-inch minimum.

b. Hardness: 40 to 50 durometer.

D. Tank Accessories

1. Tank Labels: See Section 10200.

2. Level Indication: Provide a weigh scale with a level transmitter to monitor tank level. See Section 16940.

3. Level Switches: See Section 16940.

2.04 SEISMIC RESTRAINT

A. Use Type 304 stainless steel for base plates, tension cables, anchors bolts, and other system components.

2.05 FACTORY TESTING

A. Perform gel and impact tests in accordance with ASTM D1998 on samples cut from each polyethylene chemical storage tank.

B. Submit certified shop test result. Do not ship tanks until favorable review of shop testing submittal is received.

PART 3 - EXECUTION

3.01 DELIVERY, STORAGE, AND HANDLING

A. Ship tanks upright or lying down on their sides with blocks and slings to secure the tank from moving. Avoid sharp objects on trailers. If necessary, install bracing to maintain tank rigidity and shape during transit.

B. Protect flange faces by covering with plywood or hardboard, securely fastened to the flange.

C. Package fittings, tank accessories and small parts to prevent damage during shipment. Do not ship these items loose.

D. Upon arrival at the site, inspect the tanks and accessories for damage in transit.

E. Lifting: Use slings around the tank to lift and handle the tank. Do not lift from fittings or other tank attachments.

3.02 INSTALLATION

A. Install tanks in accordance with manufacturer's installation instructions and shop drawings.

3.03 IDENTIFICATION

A. Identification of the health, flammability, and reactivity of hazardous materials is required for each tank. See Section 10200.

3.04 FIELD TESTING

A. Hydrostatic Test

1. Conduct a 48-hour static leak test for each tank. Fill tank with water to the overflow level.

2. A passing result shall be no leakage from the tank. If a leak is detected, the tank shall be repaired or replaced in a manner satisfactory to the Engineer. Repairs shall be performed by the tank manufacturer at no additional cost to the City. After repairs, retest the tank until a passing result is achieved.

B. Tank Accessories

1. Demonstrate that all tank accessories work properly.

2. Liquid Level Indicating System: Confirm level indicating system provides accurate measurement of liquid level in the tank.

3.05 CLEANING

A. After satisfactory completion of field testing, drain the testing water. Rinse the inside of the tank with clean, potable water. Hand wipe and dry as required to leave the tank interior clean, dry, and ready for chemical storage

B. Clean the tank exterior and accessories.

END OF SECTION

SECTION 13224

PRESSURE FILTER

PART 1 - GENERAL

1.01 SECTION INCLUDES

A. Provision and installation of a complete and operable, fully automated, pressure-type filtration system for arsenic, iron, and manganese removal, as indicated on the Drawings and specified herein.

B. Materials and Equipment:

1. Vertical pressure filter and appurtenances
2. Filter underdrain and surface wash systems
3. Filter media and media support
4. Filter piping and valves
5. Filter control panel
6. Compressed air system
7. Surface wash booster pumps

1.02 REFERENCED SECTIONS

A. The following Sections are referenced in this Section

1. Section 01330 – Submittals
2. Section 01600 – Material and Equipment
3. Section 01610 – Seismic Anchoring and Bracing
4. Section 01611 – Seismic Design Requirements
5. Section 01810 – Facility Startup and Commissioning
6. Section 01820 – Training
7. Section 01825 – Equipment and System Testing
8. Section 01999 – Reference Forms
9. Section 09960 – High Performance Coatings
10. Section 11000 – General requirements for Equipment
11. Section 11002 – Equipment Mounting
12. Section 11364 – Centrifugal Water Pumps
13. Section 11475 –Air Compressor Unit
14. Section 11500 – Disinfection
15. Section 15110 – Valves and Accessories

1.03 SUBMITTALS

A. Comply with Section 01330.

B. Submit the following items:

1. References

a. List of references in accordance with Paragraph 1.05-B. Include a current contact name, phone number, and address for each facility.

b. Resume(s) showing experience of supplier's field representative(s) that will be on site to provide the specified field services.

2. Shop Drawings and Product Data

a. Shop drawings of the filter, piping, media, underdrain, and appurtenances for review. Include sufficient information to demonstrate that the equipment conforms to the requirements herein. Include sizes, materials of construction, location of equipment and appurtenances, and pertinent manufacturer's data.

b. Coating information for the filters and appurtenant metal accessories. Demonstrate compliance with Section 09960.

3. Electrical, Instrumentation, and Controls

a. Submit single line diagram of the electrical distribution for the filter equipment.

b. Detailed elementary and I/O wiring diagrams showing all wiring requirements for each system.

c. Control panel and solenoid valve panel enclosure and elevation layout and diagrams.

d. System interconnection details.

e. Process and instrumentation diagrams (P&IDs) depicting equipment, instruments, motorized components, boundaries of scope of supply, and all points of connection. Include equipment information (e.g., flow rate, pressure, power requirements, motor size), flow or pressure settings, and pipe sizes on the P&IDs.

f. PLC system block diagram, including network communications architecture, control panel layouts, configuration data, I/O lists, and I/O point addresses.

g. Control descriptions, with sequence of operations, listing of monitored parameters, listing of setpoints with initial entry values, and listing of alarms with initial limit values.

h. Printouts of operator interface (OI) screens.

4. Calculations

a. Structural calculations and detailed drawings for the attachment and anchorage of the filter vessel and appurtenances and filter system equipment. Calculations shall be signed and sealed by a Professional Civil or Structural Engineer registered in the state of California and shall conform to the requirements of Sections 01610 and 01611. Anchorage

design shall consider thermal expansion and contraction of the filter vessel.

b. Hydraulic calculations of design pressure loss under clean filter bed and backwash conditions to demonstrate uniformity of flow through influent/backwash and underdrain piping. Base calculations on actual pipe sizes and configuration, orifice locations, filter media, support bed, and appurtenant piping.

c. Hydraulic calculations for sizing the surface wash pumps.

d. Calculations for sizing the combination air valves.

5. Certifications

a. Certification from the manufacturer that the filter is capable of resisting seismic loads. Loading shall be as described in Section 01611.

b. ASME Form U-1A certifying the pressure vessel construction prior to delivery of the filter to the project site.

c. Certification from the media supplier for the media that will be supplied to the project site verifying that the media conforms with AWWA B100, AWWA B102, and ANSI/NSF Standard 61.

6. Test Results

a. For each batch of media to be shipped to the project site, submit certified laboratory test results for all tests performed as required by this Specification to demonstrate conformance with AWWA B100 and this Specifications. Test results shall be favorably reviewed prior to shipment.

7. Samples

a. Two 1/2-cubic-foot samples of each of the proposed media suitable for laboratory sieve analysis and other specified tests in dust-tight containers. Include test results from laboratory testing. The City may perform independent testing of the proposed media samples to confirm test results.

8. Manuals

a. Manufacturer's installation, operation, and maintenance manuals and bulletins for review.

9. Field Test Procedures

a. Detailed step-by-step procedures for field tests to be used to verify conformance with the Performance Test Requirements Specified herein. The test procedures shall delineate methods, equipment, data collection, and analysis methods to be used.

10. Unit Responsibility Form (Section 01999)

11. Manufacturer's Installation Certification (Section 01999)

12. Warranty

a. Written performance guarantee and written warranty

1.04 DESIGN AND PERFORMANCE REQUIREMENTS

A. Influent Water Quality

1. Anticipated filter influent water quality, based on sampling from a monitoring well, are noted below:

a. pH ..... 7.6 – 8.7

b. Alkalinity ..... 111 – 268 mg/L as $CaCO_3$

c. Hardness ..... 52 – 240 mg/L as $CaCO_3$

d. Turbidity ..... 1 – 400 NTU*

e. Iron ..... 0.066 – 0.0320 mg/L

f. Manganese ..... 0.072 – 0.180 mg/L

g. Arsenic ..... 0.001 – 0.016 mg/L

* The well will be flushed until the turbidity drops to below 5 NTU before sending the groundwater to the filter.

B. Pretreatment Chemicals

1. Sodium hypochlorite will be added to oxidize and precipitate iron and manganese for removal and provide a residual leaving the filter.

2. Ferric chloride may be added to coagulate arsenic for removal.

C. Design Requirements

1. Number of Filter Vessels 1

2. Number of Filter Cells 1

3. Unit Design Flow Rate ..... 400 gpm

4. Total Filter Area ..... 78.5 sq. ft

5. Filter Loading Rate at Design Flow ..... 5.1 gpm/sq. ft

6. Maximum Operating Pressure ..... 100 psi

7. Maximum Dirty Bed Headloss ..... psi

8. Backwash Rate ..... 15 gpm/sq. ft

9. Surface Wash Rate ..... 2 gpm/sq. ft

10. Filter Vessel Outside Diameter ..... 10 ft

D. Performance Requirements

1. The filtration system shall be designed to consistently produced filtered water meeting the following filtered water objectives:

a. Turbidity ..... ≤ 1 NTU

b. Iron ..... ≤ 0.10 mg/L

c. Manganese ..... ≤ 0.02 mg/L

d. Arsenic ..... ≤ 0.005 mg/L

2. The filtration system shall be designed to meet the following conditions:

a. Filter Clogging Rate ..... ≤ 0.0125 ft/hr

b. Spent Backwash Water Production..... < 3% of throughput volume

E. Seismic Design Criteria: See Section 01611.

1.05 QUALITY ASSURANCE

A. All equipment under this Section shall be furnished by a manufacturer who has been regularly engaged in the design and manufacture of the equipment. The manufacturer of the filter assembly shall have manufactured similar filter assemblies for at least ten years.

B. The Filter System Supplier shall provide a list of at least ten references for similar arsenic, iron, or manganese removal facilities installed within the last three years. At least two of the installations shall be for 8- to 10-foot diameter, vertical pressure filters with surface wash.

C. Unit Responsibility

1. Assign unit responsibility, as specified in Section 11000, to the pump equipment manufacturer for the equipment specified in this Section and other referenced sections.

2. Submit a certificate of Unit Responsibility (Section 01999).

D. The Filter System Supplier's trained field representative shall have the following experience:

1. Overseen installation and startup of not less than five pressure filter systems, including three systems with surface wash.

2. Overseen filter system startup of not less than three drinking water treatment facilities removing iron and manganese.

E. The filter pressure vessel shall be fabricated in an ASME Code certified manufacturing facility.

1.06 SYSTEM RESPONSIBILITY

A. The Filter System Supplier shall be responsible for furnishing, coordinating, overseeing assembly and installation of, testing, and starting up the pressure filter system, complete with appurtenant items.

1.07 WARRANTY AND GUARANTEES

A. The warranty for all products and work shall comply with the requirements of the General Contractor's General Warranty and Guarantee described in the General Conditions and Supplementary Conditions.

B. Submit a performance guarantee from the Filter System Supplier stating that the filter system will meet the performance requirements in this Section for: hydraulic capacity; arsenic, iron, and manganese removal; other filtered water quality; and spent backwash water production.

C. The Filter System Supplier shall warrant the filter system equipment and materials for a period of twenty-four (24) months from start-up or thirty (30) months from shipment,

whichever occurs first. In the event of difficulty in operation or failure of equipment, the Filter System Supplier will be notified by telephone and must provide advice for correction within 24 hours. If deficiency in the performance or operation persists for more than seven (7) days, a factory-trained representative of the Filter System Supplier shall come to the site and correct the condition to the satisfaction of the City.

PART 2 - PRODUCTS

2.01

A. rnish and install a complete vertical pressure filter system with filter media and piping to remove arsenic, iron, and manganese, and suspended solids from the groundwater.

B. e filter and appurtenances shall be manufactured and supplied by:

1. prest;
2. berts Filter Group;
3. approved equal.

2.02 ER PRESSURE VESSEL

A. re Vessel

1. e filter vessel shall be designed, constructed, welded, pressure tested, and inspected in accordance with Section VIII, Division I of the ASME Boiler and Pressure Vessel Code and shall bear the ASME Code stamp.
2. e design pressure shall be 30% in excess of the normal maximum operating pressure at ambient temperature.
3. als of construction shall be ASTM A 285 Grade C, ASTM A 515, or ASTM A 516 carbon steel or better. All piping connections shall be Schedule 40 carbon steel with 150-lb fittings.
4. e vessel head style shall be flanged and dished.
5. e filter shell shall be supported by four structural steel legs welded to the vessel. Seismic loads shall be carried to the concrete foundation with the anchorage system designed by the Filter System Supplier. Design the structural legs to evenly distribute the filter loading along the concrete. Supports shall be grouted to the concrete footing, as specified in Section 11002.

B. purtenances: Equip the filter with the following connections and appurtenances on the filter or filter external piping:

1. e (1) 24-inch (minimum) round upper manway. Provide manway cover with handles suitable for lifting and a suitably sized davit.
2. e (1) 18-inch x 14-inch (minimum) elliptical lower manway for access during installation.
3. e (1) vent connection, sized by the Filter System Supplier. Vents shall be not less than 1-inch-diameter.
4. e (1) 8-inch diameter filter influent/backwash connections.

5. e (1) 8-inch diameter filter effluent/filter-to-waste connection.

6. e (1) 3-inch surface wash connection.

7. e (1) 3-inch drain connection on the filter effluent header.

8. e (2) 1/2-inch sample ports, on the filter influent header, filter effluent header, and on the filter cell for collection of filtered water sample below the filter media.

9. nimum of one (1) lifting lugs to facilitate placing the vessel.

10. er accessories as noted on the Drawings or specified herein.

C. ternal Filter Piping

1. ovide the following for connection to the pressure vessel as shown on the Drawings and described herein.

   a. One (1) 6-inch flanged filter influent header.

   b. One (1) 6-inch flanged backwash header.

   c. One (1) 3-inch flanged surface wash header.

   d. One (1) 6-inch flanged filter effluent/filter-to-waste tee.

2. ping shall be ASTM A53 steel pipe with 150# flanges.

3. ttings shall be 125# flanged cast iron.

2.03 ER INTERNALS

A. let Distributor/Backwash Collector

1. rnish one (1) 6-inch-diameter, full-length inlet distributer/backwash collector header designed to uniformly distribute the filter influent over the entire filter bed and to uniformly collect backwash water during the backwash operation.

2. e filter inlet distributer/backwash collector shall be constructed of Type 316L Stainless Steel, Schedule 10.

3. e filter inlet distributer/backwash collector shall be factory assembled and adequately supported to withstand operational and seismic loads.

B. derdrain System

1. rnish an underdrain system designed to uniformly collect filtered water and distribute backwash water across the filter bed, with variations of no more than ±5%.

2. e underdrain system shall be a header lateral type.

   a. The header shall be constructed of Type 316L Stainless Steel, Schedule 10 and have couplings welded in place for lateral connections.

   b. The laterals shall be constructed of Type 316L Stainless Steel. The orifices or slots on the laterals shall be no larger than 0.01 inches.

C. rface Wash System

1. rnish a surface wash system to uniformly distribute surface wash water.

2. e surface wash system shall be a header lateral type with nozzles.

a. The header shall be constructed of Type 316L Stainless Steel, Schedule 10.

b. The spray nozzles shall be Type 316L Stainless Steel.

3. ternately, the surface wash system may be the self-propelled rotary type.

a. The surface wash supply pipe, agitator body, and distributor arm shall be Type 316L Stainless Steel.

b. Provide non-clogging nozzles threaded to the agitator arm and spaced for uniform water distribution. The nozzles shall be arranged to impart rotation on the distributor arm when water is applied.

4. e pressure requirement for the surface wash system shall be no more than 35 psi above the backwash supply pressure.

D. dware: Use 316 stainless steel bolts, nuts, and washers for the bolted connections inside the filters.

E. ion: Provide dielectric isolation between carbon steel and stainless steel components.

F. ncrete Fill: Per Filter System Supplier requirements. Concrete shall have NSF 61 certification or be coated with compatible NSF 61 certified coating system for contact with potable water.

2.04 ER MEDIA AND SUPPORT GRAVEL

A. e Filter System Supplier shall furnish the Greensand filter media, anthracite filter media, and gravel support bed.

B. l filter media shall be a product of a company experience in the production of media for water treatment filtration.

C. lter media materials, testing, shipment, placement, and preparation of filter for service shall conform to AWWA B100 and AWWA B102, except as modified herein.

D. e Greensand, anthracite, and support gravel shall meet AWWA B100. The Greensand shall meet AWWA B102. The Greensand, anthracite, and support gravel shall be NSF/ANSI 61 certified.

E. e filter media shall be generally spherical in shape and conform to the following requirements before and after installation.

1. thracite

a. Depth ..... 12 inches

b. Effective Size ..... 0.60 to 0.80 mm

c. Uniformity Coefficient..... less than 1.60

d. Specific Gravity..... 1.60 ± 0.1

e. Anthracite coal shall be No. 1 grade with a MOH hardness of over 2.7. Not more than 20% of the total weight or number of particles shall be thin or flat as defined by one dimension exceeding three times the other dimension.

2. nd

a. Depth ..... 18 inches

b. Effective Size ..... 0.30 to 0.35 mm

c. Uniformity Coefficient..... less than 1.60

d. Specific Gravity..... 2.40 ± 0.1

3. pport Gravel

a. Depth ..... 9 inches

b. Specific Gravity..... not less than 2.6

c. The gravel support bed shall consist of two (2) layers of graded gravel with the following gradations and thickness.

1) 6 x 12..... 3 inches (bottom layer)

2) 1/8" x 1/4"..... 6 inches (top layer)

F. and screen all anthracite, Greensand, and support gravel before shipment

G. rnish filter media in sufficient quantity for initial operation of the filters. Include enough media to account for initial media loss from washing and scraping. Ship all media to the project site double-bagged in one cubic foot sealed bags on pallets, with the contents in each bag marked on the exterior.

2.05 ER EXTERIOR VALVES

A. rnish the following valves:

1. tterfly valves with pneumatic actuators in the following quantities and sizes:

a. Filter Influent: One (1) 6-inch valve.

b. Filter Effluent: One (1) 6-inch valve.

c. Filter Backwash: Two (2) 6-inch valves.

d. Filter-to-Waste: One (1) 6-inch valve.

2. rface Wash: One (1) 3-inch valves.

3. tomatic Combination Air/Vacuum Release Valve

a. Quantity: One (1) valve.

b. Size: To be sized by the Filter System Supplier.

4. lter Drain: 3-inch butterfly valve with lever handle and camlock connection on each filter drain connection.

5. ts: 1.5-inch stainless steel ball valves on each filter vent connection.

6. mple Port: 0.5-inch stainless steel ball valves at each sample port on the filter, including the filter inlet and filter outlet.

B. e Section 15110 for valve requirements.

2.06 NG

A.

1. All coating products applied to surfaces in contact with the process water shall be NSF/ANSI 61 certified.

2. Apply all coatings in strict conformance with the manufacturer's instructions and the requirements of Section 09960, as modified herein.

3. Grind all welds and sharp edges smooth to a radius compatible with the lining and free of porosity and correct any imperfections prior to the application of the protective coatings.

B. lter Tank Interior

1. op coat the filter vessel interior and all appurtenant metal accessories specified herein within the vessel (other than stainless steel) with the following coating system:

   a. Near white sandblast conforming to SSPC-SP10.

   b. Three coats with high solids epoxy, Tnemec Series 140 pota-pox or equal, to give a finish of 12 to 15 mils dry film thickness (DFT).

2. st all interior coatings for pinholes with a low voltage electric resistance meter per NACE SP0188. Check coating thickness with a magnetic thickness gauge. Repair all deficiencies in film integrity and thickness.

C. lter Tank Exterior

1. op prime the filter vessel exterior and all appurtenant metal accessories specified herein (other than stainless steel) with the following coating system:

   a. Commercial sandblast conforming to SSPC-SP6 or better.

   b. Prime coat with high solids epoxy, Tnemec Series 140 or equal, to give a finish of 2 to 4 mils DFT.

2. nal coat will be field applied.

2.07 ER CONTROL PANEL

A. e Filter System Supplier shall furnish an automatic control system consisting of a programmable logic control (PLC) based control panel with an operator interface terminal (OIT), necessary hardware, timers, relays, switches, alarms, input/output (I/O), enclosures, and other items for a complete operational system.

B. e filter control panel shall fully tested with all alarms, indication, and I/O fully simulated at the factory prior to shipment. All screens shall be tested along with all alarm functions and other control parameters, verified by factory certification with inspector and date of inspection noted.

C. l control panel components shall meet the requirements of Division 16 of these specifications.

2.08 SED AIR SYSTEM

A. mpressed Air Supply System

1. rnish a compressed air supply system for the supply of instrument-quality air, consisting of an air compressor, air receiver, dryer, filters, and other equipment necessary for the operation of the Filter System.

2. e air compressor system shall meet the requirements of Section 11475.

B. noid Panel

1. rnish a solenoid panel in a NEMA 4X enclosure.

2. e solenoid panel shall contain 24 VDC air control solenoid valves with manual overrides, with the manifold installed, wired to terminal strips, and plumbed to bulkhead fittings.

3. ovide selector switches for each valve on the valve control panel to allow for selection of manual, off, or auto control of the valve.

4. ovide press-in pneumatic fittings and poly tubing with chrome fittings for external connection to the pneumatically actuated butterfly valves.

5. ovide a membrane dryer to ensure instrument-quality air is supplied to the pneumatically actuated valves.

6. ovide a low air pressure switch to alert of low air supply pressure and shut down filter system upon loss of valve control.

2.09 ACE WASH PUMP

A. ovide one (1) booster pump to boost the pressure of the groundwater delivered from the well pump discharge pipeline to the filter for surface wash.

B. e pump shall be sized to deliver water at the flow rate and pressure required for surface wash of the filter cell.

C. e pump shall meet the requirements of Section 11364.

2.10 ACCESSORIES

A. Differential Pressure Transmitter

1. Furnish one (1) differential pressure transmitter to monitor the differential pressure across the filter common inlet and common outlet headers.

2. Provide transmitter with NEMA 4 enclosure.

3. Differential pressure transmitter shall be Siemens Sitrans P; or equal.

2.11 SPARE PARTS

A. Furnish one set of the Filter System Supplier's recommended spare parts. At minimum, spare parts shall include:

1. One (1) spare manway gasket for the 24-inch upper manway.

2. 50 cubic feet of extra anthracite.

PART 3 - EXECUTION

3.01 DELIVERY, STORAGE, AND HANDLING

A. Conform with requirements in Section 01600.

B. Receive, offload, and install filter vessel in strict conformance with the manufacturer's installation instructions.

3.02 FIELD SERVICES

A. Installation

1. The Filter System Supplier shall inspect and supervise the installation and certify that the Contractor has installed the filter equipment in the correct manner in accordance with Section 01810.

2. The Filter System Supplier shall be responsible for directing placement of filter internals; testing of internal piping for clogging and uniform flow; directing placement of concrete fill, support gravel and filter media, including washing and skimming of media fines; placing the filter system in service; and conducting the performance tests.

3. The Filter System Supplier shall be onsite and shall oversee installation of the filter, including all internal piping, placement of concrete, verification of underdrain uniform flow conditions, placement of support, filter media placement, including washing and skimming of media fines, and sampling of in situ media.

4. Filter System Supplier shall train the Contractor's representatives in the correct installation procedures. Filter System Supplier shall be available to assist the Contractor at any time during installation of the remaining filters. In the event of any difficulties, Filter System Supplier shall return to site to assist the Contractor to correct any deficiencies.

5. Upon completion of installation and prior to testing, Filter System Supplier shall return to site and collect filter media samples from each of the remaining filters for laboratory analysis.

B. The Filter System Supplier shall make a field trip within one month of the end of the one-year warranty to visit the site and inspect the operation of the system. Within one week after the site visit, submit a report of results of the trip pointing out deficiencies and offering recommendations for unperformed maintenance.

3.03 INSTALLATION

A. After the filter vessel is installed, inspect the interior. Touch-up or repair any marred or scratched coatings to the satisfaction of the City prior to placing media. Spark test all repaired surfaces per NACE SP0188 to verify that they are holiday free.

B. Underdrains

1. After the filter is installed, thoroughly clean the underdrain systems of all extraneous material which could later collect in the underdrains.

2. Place 2,500 psi NSF 61 compliant concrete in the bottom of the filter vessel up to the base of the gravel support bed. Provide concrete tie downs.

3. Test the underdrain systems that have nozzles by backwashing at a rate of 15 gpm/sq. ft to ensure that uniform water distribution is achieved in the filtering and backwash modes. Any irregularities in the height or volume of water jets emitted from distributors shall be corrected by thorough cleaning of underdrain piping and nozzle orifices. A condition of uniform flow shall be attained prior to placement of gravel support material.

4. Before installation of the support gravel, vacuum clean the underdrain area, all piping, and all surfaces that come into contact with the backwash supply water. This cleaning must be favorably reviewed before beginning placement of the support gravel.

5. The support gravel shall be placed carefully to avoid damage to the underdrain system and coatings.

6. After the media is installed, backwash at 15 gpm/sq. ft. Irregularities in the surface elevation of the media greater than 1-inch shall be considered excessive and indicative of a non-uniform flow. Correct any deficiencies until a uniform flow is attained.

C. Media

1. Place filter media, wash, scrape, and add makeup media per AWWA B100 and AWWA B102.

2. After the media has been installed and cleaned in the filters, it will be sampled and tested for conformance with this Section. Replace any media found to be in nonconformance to these specifications at no additional cost to the City.

D. Disinfect filter media, filter vessel and piping per Section 11500 prior to placing into service.

3.04 FIELD PAINTING

A. Coat the exterior of the filter and appurtenances in accordance with Section 09960.

3.05 STARTUP AND TESTING

A. Comply with the requirements of Section 01810 and 01825.

B. Furnish all equipment required to complete the filter performance tests.

C. The Filter System Supplier shall start up the equipment, make necessary adjustments, and demonstrate to the City that all components of the filtration system are in proper operating condition by continuous operation for a period of not less than 96 continuous hours (four full days). Successfully accomplish at least one manual backwash and one automatic backwash events per filter during this period, one of which shall be induced by simulating a high head loss condition. During this period, the manufacturer's representative shall explain and train the City's operations personnel on the function, operation, and maintenance of the filtration equipment, in accordance with Section 01820.

D. The filter system shall meet the Performance Requirements previously specified.

3.06 TRAINING

A. The Filter System Supplier shall provide a trained field representative to instruct operating personnel in the proper use and maintenance of the new filters and controls.

1. Provide two (2) training days at startup.

2. It is the responsibility of the Contactor to schedule and arrange for training of all plant shifts.

3. See Section 01820 for additional training requirements.

B. The training may be videotaped.

END OF SECTION

SECTION 13237

FIBERGLASS REINFORCED PLASTIC (FRP) GRATING

PART 1 - GENERAL

1.01 DESCRIPTION

A. This section specifies fiberglass reinforced plastic (FRP) grating and all associated hardware. All specified FRP products shall be of the pultruded type. Products manufactured by any other method are not acceptable.

1.02 REFERENCED SECTIONS

A. The following Sections are referenced in this Section

1. Section 01330 – Submittals

1.03 PERFORMANCE AND DESIGN REQUIREMENTS

A. Grating: FRP grating shall be designed in accordance with the following:

1. A minimum structural safety factor of 2.

2. Unless otherwise shown on the Drawings, design loads for FRP grating shall be 200 pounds per square foot.

3. Maximum deflection shall be the quotient of the grating span divided by 360 or 1/4 inch, whichever is less.

4. Unless otherwise specified, grating shall be supported on epoxy coated steel angles and channels bolted to concrete, as indicated on the Drawings.

B. Clips, Bracing, and Anchor Bolts

1. Stanchions and bracing shall be steel I-beam cross section designed for vertical loads associated with the grating plus the weight of any supported equipment as indicated on the Drawings.

2. All rivets or connectors and anchor bolts shall be stainless steel ASTM A320, Type 304. All connectors and anchor bolts shall be epoxy coated for corrosion protection.

3. All hold-down clips shall be FRP.

1.04 SUBMITTALS

A. Provide submittals in accordance with Section 01330 and include the following information:

1. Manufacturer and method of fabrication.

2. Materials selected for laminates to be provided for the project.

3. Grating styles, thicknesses, sizes, etc.

4. Description of all accessories, including coatings.

5. Installation procedures, including field jointing techniques.

PART 2 - PRODUCTS

2.01 MANUFACTURERS

A. Candidate manufacturers include Fibergrate Corp., MMFG, Creative Pultrusions, Inc., or equal.

2.02 MATERIALS

A. Standard vinyl ester resin (Dow 411 or better) shall be used for all FRP products.

2.03 GRATING

A. FRP grating shall be of the pultruded type. The system shall consist of two continuous, pultruded spacer bars and a center core/wedge. The spacer bars shall be notched at each bearing bar so that the bars are both mechanically locked and chemically bonded.

B. Unless otherwise specified, the minimum thickness of all FRP grating shall be 1-1/2 inches. Grating sheet sizes shall be compatible with the support spans shown on the Drawings and shall require a minimum of field cutting. All cut edges shall be sealed. Load bars shall run in the short span direction.

C. The surface of the grating shall be skid resistant. The top of the grating shall be covered with a permanently bonded grit, baked epoxy, antiskid surface.

D. The workmanship and finish on all grating shall be of the highest caliber and equal to the best product of up-to-date manufacturing facilities. All cut edges shall be sealed using a resin system equal to or superior to that used in the grating. Adequate quantities of resin sealing kits comprised of premeasured quantities of thixotropic resin and catalyst, mixing containers, ship brushes, and stirring sticks shall be provided by the fabricator.

E. The grating shall be fire retardant with a flame spread of less than 25 when measured under ASTM E84, Class 1 flame rating and the self-extinguishing requirements of ASTM D635. The grating manufacturer shall submit an independent laboratory test report of testing conducted on the grating (not a resin test report). The test report shall be on the exact type of grating quoted for the project and shall be dated within the past 3 years. Fire retardance shall be achieved using combinations of aluminum trihydrate, halogen, and antimony trioxide in the resin system.

2.04 COLOR

A. Grating shall be colored using pigment dispersed in the resin system. Color shall be selected by the City from the manufacturer's standard for the resin system used.

PART 3 - EXECUTION

3.01 INSTALLATION

A. Install the grating in accordance with the instructions of the grating manufacturer. All dimensions shall be field verified. There shall be a minimum of 1/4-inch and a maximum of 1/2-inch clearance at every side of the grating to any structural member or trench edge.

B. Each pultruded grating panel shall be held down with a minimum of one clip per 6 square feet of panel but no less than four clips per panel. Support each edge or two edges of each panel. A minimum of 1-1/2 inches of load bar shall rest on the support.

END OF SECTION

SECTION 15050

PIPING SYSTEMS

PART 1 - GENERAL

1.01 SECTION INCLUDES

A. Furnish and install all piping, including fittings, supports, and accessories shown on the Drawings and described herein, to completely interconnect all equipment and valves for a complete and operable system.

1.02 REFERENCED SECTIONS

A. The following Sections are referenced in this Section:

1. Section 01330 – Submittals
2. Section 02300 – Earthwork
3. Section 09960 – High Performance Coatings
4. Section 11500 – Disinfection
5. Section 13111 – Galvanic Cathodic Protection for Buried Pipes
6. Section 15076 – Piping and Valving Identification Systems
7. Section 15951 – Testing Gravity Flow Pipelines
8. Section 15996 – Testing Pressure Piping

1.03 REFERENCES

A. ANSI – American National Standards Institute

B. ASME – American Society of Mechanical Engineers

C. ASTM – American Society for Testing and Materials

D. AWWA – American Water Works Association

1.04 SUBMITTALS

A. Comply with Section 01330.

B. Product Technical Data

1. Submit schedule of piping systems that will be used and services that they will be used for.
2. Submit product data on pipe, fittings, joints and joining materials, gaskets, linings, coatings, hardware, piping connections, piping accessories, thermal insulation, and other components.
3. Submit manufacturer's written directions for material handling, delivery, storage, and installation.

C. Fabrication and/or Layout Drawings

1. Before preparation of shop drawings, installation conditions, including existing utilities and structures, shall be verified by excavation, inspection, and

measurement. Submit field measurements and photos with shop drawings, where exposed conditions differ significantly from the conditions indicated on the Drawings.

2. Submit detailed layout drawings of all piping. Schematics may be submitted for piping 3 inches and smaller. Drawings shall include:

   a. Dimensions of pipe length

   b. Invert or centerline elevations and sizes of pipe crossings, intersecting ductwork, intersection conduit/conduit racks, or other potential interferences requiring coordination

   c. Centerline elevations for pressure pipelines and invert elevations for gravity flow pipelines

   d. Bury depth for buried yard piping

   e. Location and type of pipe supports and anchors

   f. Location of valves and valve actuator type

   g. Location and details of fittings, tapping locations, thrust blocks, joint restraints, couplings, flexible expansion joints, connections to equipment, piping accessories, thermal insulation, and related appurtenances

   h. Line slopes and vents

3. Submit schedule of interconnections with existing piping and method of connection.

D. Test Reports

1. Submit certified test reports as required herein and by the referenced standards specifications.

2. Submit field test reports as required in PART 3.

1.05 QUALITY ASSURANCE

A. Materials and equipment furnished under this Section shall be of manufacturers who have been regularly engaged in the design and manufacture of the materials and equipment for a period of at least five (5) years. Demonstrate to the satisfaction of the Engineer that the quality is equal to the materials and equipment made by the manufacturers specifically named herein, if an alternate manufacturer is proposed.

B. Factory Quality Control: The Contractor shall test all products as noted herein and by the reference specifications.

C. Field Quality Control:

1. The City will:

   a. Inspect field welds and test the welds if it is deemed necessary.

   b. Perform bacteriological analysis for pipelines to be disinfected.

2. The Contractor shall:

   a. Perform leakage tests.

b. Be responsible for the costs of additional inspection and retesting by the City resulting from noncompliance.

PART 2 - PRODUCTS

2.01 GENERAL

A. Pipe sizes are nominal inside diameter unless otherwise noted. All sizes of pipe shall be as called out on the Drawings and specified herein.

B. All pipe and fittings delivered to the job site shall be clearly marked to identify the material, class, thickness, and manufacturer.

C. All material shall be new and free of blemishes.

D. Where only one type of pipe is called out, no substitutions shall be allowed.

E. Piping materials of like kind shall be the product of one manufacturer.

F. The Contractor is responsible for furnishing and installing all items necessary to make a complete and workable piping system. This includes, but is not limited to, valve boxes, insulating couplings and gaskets, piping specialties, and all other items required by the nature of the installation. Any item not specified herein but required by the installation shall be of first quality, equal in grade to similar materials specified herein, and shall comply with all applicable reference standards listed herein.

G. All materials (pipe, fittings, gaskets, linings, etc.) in contact with the potable water, process water to be treated to potable water, or liquids (e.g., chemicals) to be added to the process/potable water shall be lead-free and shall meet the requirements of California Code of Regulations Title 22 Chapter 16 Article 7 regarding direct and indirect additives.

H. Paint exposed pipe in conformance with requirements of Section 09960.

2.02 PIPE MATERIALS

A. Pipe and Fitting Designation:

1. Piping materials are identified by a “Type” designation in these specifications.

2. Specific piping materials and other pertinent information is summarized for each pipe type.

3. Pipelines are designated on the Drawings by a two-element code, the first representing the nominal pipe diameter and the second an abbreviation indicating the piping system.

4. The following schedules, except where indicated otherwise on the Drawings, identify pipe type to be used for each piping system. Where the pipe type is not specifically identified on the Drawings, materials shall be selected based on the pipe service as listed in the following schedule and specified in subsequent articles of this specification.

B. Pipe Type Schedule:

Abbr.	System	Size	Service	Pipe Type	Notes
Process					
AR BW FL FTW FW RW SW TW	Artesian Relief Backwash Water Flush Line Filter-to-Waste Filtered Water Raw Water Surface Wash Treated Water	≤12"	B	DIP-B	
			E	DIP-F	
SA	Sample	All	B, E	PVC-P	
Chemicals					
AMS	Ammonia Sulfate	All	B, E	PVC-P	1
FC	Ferric Chloride	All	B, E	PVC-P	1
HYPO	Sodium Hypochlorite	All	B, E	PVC-P	1
Water					
PW	Potable Water	<4"	B, E	CUP	
Air					
CA	Compressed Air	All	E	CUT	
VENT	Vent	All	E	PVC-P	2
Drain					
D	Building Drain	All	B, E, C	CISP	
DR	Process Drain	4" ≤ ϕ ≤ 12"	B	DIP-B	
			E	DIP-F	
		<4"	E	PVC-P	
SAD	Sample Drain	All	B, E	PVC-P	
SD	Storm Drain	All	B	PVC-D	
SS	Sanitary Sewer	All	B	PVC-D	
			E, C	CISP	

Service: B=Buried; E=Exposed; C=Concrete Encased; S=Submerged

Notes:

1. Provide double containment for chemical pipelines within the building and for all buried chemical pipelines.
2. For vents on chemical storage tanks only.

C. Cast Iron Soil Pipe (CISP)

1. Pipe and Fittings: Bell and spigot service weight cast iron soil pipe. Hubless cast iron soil pipe may be used in concealed locations only.

   a. Bell and Spigot: ASTM A74.

b. Hubless: ASTM A888 and CISPS Standard No. 301.

2. Gasket: Sewage and oil resistant, ASTM C564.

3. Lining and Coatings: None.

D. Copper Pipe (CUP)

1. Pipe: Copper pipe, ASTM B88.

a. Buried: Type “K.”

b. Exposed: Type “L.”

2. Fittings

a. Soldered: Wrought copper, ANSI B16.22l or cast bronze ANSI B16.18.

b. Flared: AWWA C800 and ANSI B16.26.

3. Joints

a. Buried: Soldered or flared.

b. Exposed: Soldered.

4. Solder: ASTM V32, Alloy Grade E or HB. Solder and flux shall contain less than 0.2% lead.

5. Lining and Coatings: None.

E. Copper Tube (CUT)

1. Pipe: Seamless copper tube, ASTM B88.

a. Buried: Type “K.”

b. Exposed: Type “L.”

2. Fittings

a. Wrought copper solder joint fittings, ASME B16.22.

3. Joints

a. Soldered.

4. Solder

a. Lead-free alloy conforming to ASTM B32 with water flushable flux conforming to ASTM B813.

5. Lining and Coatings: None.

F. Ductile Iron Pipe – Bell & Spigot (DIP-B)

1. Pipe

a. Ductile iron bell and spigot pipe, AWWA C151.

b. Minimum Pressure Class: 350.

2. Fittings

a. Ductile iron with push-on joints or mechanical joints, AWWA C110 or C153.

b. Special fittings not available in ductile iron or cast iron pipe may be fabricated of welded steel pipe with a design pressure of 350 psi. Submit design and wall thickness to Engineer for review.

3. Joints

a. Conforming to AWWA C111.

b. Push-on or mechanical joints, except where flanged joints are shown on the Drawings.

c. For all connections, provide restrained joints for pipe and fittings that create a change in pipe size and on fittings that result in a change of direction, whether the change is in the horizontal plane or a vertical plane.

d. Manufacturers: One of the following, or equal.

e. Push-on Joints

a) Fastite Joint as manufactured by American Cast Iron Pipe Company.

b) Pacific States Cast Iron Pipe Company.

c) Tyton Joint as manufactured by U.S. Pipe.

f. Restrained Push-on Joints

a) United States Pipe and Foundry Company, TR Flex.

b) Pacific States Cast Iron Pipe Company, Thrust Lock.

c) American Cast Iron Pipe Company, Flex Ring or Lok-Ring.

g. Restrained Mechanical Joints

a) Pacific States Cast Iron Pipe Company, Lock Mechanical Joint.

b) American Cast Iron Pipe Company, MJ Coupled Joint.

c) EBBA Iron, Megalug.

4. Gaskets

a. Synthetic rubber compound in which the elastomer is nitrile or neoprene, conforming to AWWA C111. Lubricant for push-on joint piping shall be the pipe manufacturer's standard.

5. Bolts and Nuts

a. Buried, for mechanical joints: Type 304 Stainless Steel.

6. Pipe Taps

a. Threaded metal pipe branch lines up to 1/2-inch in diameter from ductile iron pipe may be made with direct threaded taps, provided the ductile iron wall thickness is in excess of the minimum shown in Tables A.1 and A.2 of AWWA C151 for four full threads.

b. Bosses may be used at the taps to provide the required pipe wall thickness, or use service saddles or reducing flanges on tees.

7. Lining and Coatings

a. Lining: Double thickness cement mortar lining seal coated with asphaltic material in accordance with AWWA C104, except where unlined pipe is specifically indicated on the Drawings.

b. Coating: Asphalt coating per AWWA C151.

G. Ductile Iron Pipe – Flanged (DIP-F)

1. Pipe

a. Flange Pipe: Ductile iron pipe, AWWA C115. Provide minimum thickness Class 53.

b. Grooved End Pipe: Ductile iron pipe, AWWA C151 with grooves in accordance with AWWA C606, Table 3, for rigid joints. Provide minimum thickness classes in accordance with AWWA C606.

2. Fittings

a. Ductile iron, AWWA C110.

b. Special fittings not available in ductile iron may be fabricated of epoxy lined and coated welded steel pipe with a design pressure of 350 psi. Submit design and wall thickness to Engineer for review.

3. Joints

a. Provide flanges, except where grooved couplings are required in the Drawings

b. Flanges: Ductile iron flange, in accordance with AWWA C115 and AWWA C110 and faced and drilled to 125 lb ANSI B16.1 standards.

c. Grooved Coupling: Mechanical grooved couplings, in accordance with AWWA C606, and minimum pressure rating of 150 psi.

4. Gaskets

a. Gaskets for flanged joints shall be 1/16 in. thick (1/8 in. thick for pipes 12 in. and larger), rubber conforming to applicable parts of ANSI B16.12 and AWWA C115 and C207.

b. Gasket material shall be free from corrosive alkali or acid ingredients and suitable for use in potable water lines.

c. Gaskets shall be one piece with holes to pass bolts.

5. Bolts and Nuts

a. Above ground and exposed pipe: Corrosion resistant, high strength, low alloy carbon steel hex bolts, conforming to AWWA C115.

b. Underground, in concrete valve boxes, or underwater: Type 304 Stainless Steel.

6. Pipe Taps

a. Threaded metal pipe branch lines up to 1/2-inch in diameter from ductile iron pipe may be made with direct threaded taps, provided the ductile iron wall thickness is in excess of the minimum shown in Tables A.1 and A.2 of AWWA C151 for four full threads.

b. Bosses may be used at the taps to provide the required pipe wall thickness, or use service saddles or reducing flanges on tees.

7. Lining and Coatings

a. Lining: Double thickness cement mortar lining seal coated with asphaltic material in accordance with AWWA C104, except where unlined pipe is specifically indicated on the Drawings.

b. Coating: Exterior of exposed pipe shall be painted in accordance with Section 09960.

H. Polyvinyl Chloride - Pressure (PVC-P)

1. Pipe: Schedule 80 as listed, Class 12454-B, rigid, unplasticized pipe made from polyvinyl chloride in accordance with ASTM D1784 and D1785.

2. Fittings: Schedule 80 to match pipe, of the same material as the pipe, conforming to ASTM D2467.

3. Joints: Joints shall be solvent weld, except that threaded or flanged joints are to be used where required at specific locations

4. Cement: Solvent weld connections shall be made in strict accordance with the pipe manufacturer's recommendations using a solvent cement and primer (if recommended) meeting ASTM D2564. Solvent cement for Sodium Hypochlorite piping shall be IPS 724 CPVC solvent cement or equal. Primer shall be IPS P-70 primer or equal.

5. Pipe Cleaner: In accordance with the pipe manufacturer's recommendations.

6. Lining and Coatings

a. Lining: None.

b. Coating: Exterior of exposed pipe shall be painted in accordance with Section 09960.

7. Double Containment Piping: Provide double containment pipe for PVC pipe and tubing as noted in the Pipe Schedule and elsewhere in the Drawings and Specifications.

a. Type: Schedule 40 PVC containment pipe, conforming to ASTM D1784. Fittings shall be fabricated solid or two-piece hinged.

b. Size

Carrier Pipe Size	Containment Pipe Size
1/2-inch	2-inch
3/4-inch through 1-inch	3-inch
1-1/2-inch through 2-inch	4-inch
2-1/2-inch through 4-inch	6-inch

c. Joints: Solvent weld, except flanged where required. Use two-piece hinged couplings where necessary. Do not make up joints until leak test of primary carrier pipe has been successfully completed.

d. Supports: Carrier pipe shall be installed concentric to the containment pipe using supports or guides within the containment pipe. Space supports so that the carrier pipe deflection does not exceed 0.1-inch. Supports shall be designed to allow pulling of leak detection cable through the containment pipe.

e. Provide continuous leak detection/draw off points at local low points within the system.

f. Manufacturers: Asahi/America; George Fischer; or equal.

I. Polyvinyl Chloride - Drainage (PVC-D)

1. Pipe and Fittings: Polyvinyl chloride sewer pipe.

a. 4-inch through 15-inch nominal size: ASTM D3034, SDR 26.

b. 18-inch through 48-inch nominal size: ASTM F679.

2. Joints: Elastomeric gasket joints, ASTM D3212.

3. Gasket: Nitrile, ASTM F477.

4. Lining and Coatings

a. Lining: None.

b. Coating: Exterior of exposed pipe shall be painted in accordance with Section 09960.

2.03 MISCELLANEOUS PIPING CONNECTIONS

A. Refer to pipe material specifications for typical pipe joints. Furnish other joint devices where called for on the Drawings, as specified below.

B. Flexible Couplings and Flanged Coupling Adapters (FCAs)

1. Furnish and install flexible couplings and flanged coupling adapters where shown on the Drawings or required by installation.

2. All couplings shall be restrained and suitable for a minimum working pressure of 150 psi.

3. Longitudinal movement and angular defections capabilities shall meet AWWA C219.

4. Materials

a. Sleeves: Galvanized steel or have a fusion bonded coating suitable for potable water.

b. Followers: Cast iron, ductile iron, or steel.

c. Sleeve Bolts: Type 304 SS.

d. Gaskets: Synthetic rubber suitable for potable water.

5. Manufacturers

a. Pipe sizes with identical outside diameters: Smith-Blair Type 411 or 441; Dresser Style 38 or 153; or equal.

b. Connecting pipes with slightly different outside diameters: Smith-Blair Type 413 or R441; Dresser Style 62 or 162; or equal.

C. Rubber Expansion Joints

1. Type: Built-up single arch expansion joints with full flanges and retainer rings. Provide filled arch type for services with solids.

2. Materials: EDPM cover over reinforced nylon or polyester body and EDPM tube with galvanized steel retainer ring. Cover shall have protective coating where installed outdoors.

3. Pressure and Temperature Rating

   a. Up to 12-inch-diameter: 190 psi, 250°F

   b. Larger than 12-inch-diameter: 80 psi, 250°F

4. Manufacturers: Proco Series 230; Garlock Style 204HP

5. Provide galvanized steel control rod-compression sleeve assemblies for all rubber expansion joints, except where specifically omitted in Drawings. The number and size of the control rods shall be as required for the test pressure of the pipe system or 50 psi, whichever is greater.

6. Provide full size intermediate metal pipe flanges where rubber spool connects with wafer-style valves, lug-style valve, or other items that do not have full face metal flanges.

2.04 MISCELLANEOUS PIPING ACCESSORIES

A. Warning Tape

1. Provide a single line of plastic warning tape and magnetic warning tape for installation above all buried pipes.

2. Plastic Warning Tape

   a. Print two messages on the tape with bold letters approximately 2” high. Messages shall be repeated at minimum every 2 feet.

      1) First message: CAUTION CAUTION CAUTION

      2) Second message: BURIED _____LINE BELOW

         a) Provide the appropriate pipeline descriptor in the second message (e.g., WATER, SEWER, STORM, CHEMICAL, ELECTRICAL).

   b. Dimension: 6-inch wide; 0.005-inch thick.

   c. Material: Inert plastic material suitable for direct burial; capable of stretching to twice its original length.

3. Magnetic Warning Tape

   a. Print messages on the tape with bold letters approximately 2” high. Message shall be repeated at minimum every 4 feet.

      1) Message: CAUTION BURIED _____LINE BELOW

         a) Provide the appropriate pipeline descriptor in the message (e.g., WATER, SEWER, STORM, CHEMICAL, ELECTRICAL).

   b. Dimension: 3-inch wide; 0.005-inch thick.

c. Material: Acid and alkali-resistant polyethylene; 1,500 psi strength and 140% elongation value.

4. Color: Colors shall meet the APWA Color-Code standard for identification of buried utilities.

5. Manufacturers

a. Brady;

b. Seton;

c. Or equal.

B. Service Saddles

1. On Ductile Iron Pipe:

a. Materials: Ductile iron saddle with electro-galvanized straps and hardware, and nitrile or neoprene gaskets.

b. Type: For ductile iron pipe 4 inches and less, single strap saddles may be used. For pipe greater than 4-inch, double strap saddles shall be used.

c. Manufacturers: Smith-Blair Model 311 or 313; R. H. Baker and Company Series 180-0; or equal

C. Link Seals

1. Where shown on the plans, provide link seals and compatible wall sleeves with weep ring for wall penetrations.

2. Use manufacturers recommended service designation unless noted otherwise.

3. Type: Linked rubber sealing elements and pressure plates tightened together with stainless steel bolts.

4. Manufacturers

a. Thunderline Corporation;

b. Calpico;

c. Or equal.

PART 3 - EXECUTION

3.01 INSTALLATION OF PIPE

A. General

1. All pipes shall be carefully placed and supported at the proper lines and grades and, where possible, shall be sloped to permit complete drainage. Piping runs shown on the Drawings shall be followed as closely as possible, except for minor adjustments to avoid architectural and structural features. If major relocations are required, they shall be approved by the Engineer.

2. Wherever a pipe three inches in diameter and larger passes from concrete to earth, a flexible pipe coupling, shall be installed within 1 foot of the concrete. Particular care shall be taken to ensure a full support of the pipe in the earth between and beyond the joints.

3. When installing buried PVC pipe, it shall be “snaked” in the trench. In addition, PVC pipe shall not be laid when temperature is 32°F, or below. Piping shall be installed without springing or forcing the pipe in a manner which would set up stresses in the pipe, valves, or connected equipment.

B. Exposed Pipe

1. Exposed pipe shall mean any pipe not buried or encased in concrete. In erecting exposed pipe a sufficient number of screw unions, flanged or grooved end type joints shall be used to allow any section or run of pipe to be disconnected without taking down adjacent runs. Flanges and grooved couplings shall be employed on pipes 2-1/2 inches and larger. The provision of an adequate number of appropriate take-down fittings must be rigidly adhered to whether or not such fittings are indicated on the Drawings. Take-down fittings shall also be provided within two feet of threaded valves and other appurtenances. Where piping passes through concrete or masonry walls, take-down fittings shall be employed within 3 feet of the wall.

2. All exposed pipelines shall accommodate expansion and contraction forces by the use of expansion joints, anchors, and pipe guides. Where pipes cross structure expansion joints, rubber spherical molded type pipe expansion joints with restraining rods shall be installed whether specifically shown or not.

3. All unrestrained joints in pressure pipelines, including bell and spigot, flexible couplings, expansion joints and flange adapters shall have tension bars (tie rods) provided in accordance with AWWA M11 Design Manual, Figures 19.15 and 19.16, and Tables 19.7 and 19.8. Thrust protection shall be for 1-1/2 times the specified test pressure for the pipe.

4. Where piping conveying liquids passes over motor control centers, electrical panels and other electrical devices, install a protective drainage tray below the piping.

C. Buried Pipe

1. General

a. Trenching, bedding, and backfill for buried piping shall be as shown on the Drawings and as specified in Section 02300.

b. Buried pipe shall be prepared as herein before specified and shall be laid on the prepared granular base and bedded to ensure uniform bearing. No pipe shall be laid in water or when, in the opinion of the Engineer, trench conditions are unsuitable. Joints shall be made as herein specified for the respective types. Take necessary precautions to prevent uplift and floating of the pipe prior to backfilling.

c. Where no pipe grade elevations are shown on the Drawings, install buried piping with at least 3 feet of cover to finished grade. Where piping crosses under buried electrical ducts, provide at least 4 feet 6 inches of cover. Provide 12 inches minimum separation between the buried pipes and ducts.

d. If possible, avoid crossing water pipe under sewer pipe. Where a water pipe crosses under a sewer pipe, there shall be no joints in the water pipe

within 10 feet of the crossing and provide 1 foot minimum vertical separation between the pipes at the crossing.

e. Provide each pipe with a firm, uniform bearing for its full length in the trench except at field joints. Do not lay pipe in water or when trench conditions or weather are unsuitable for such work.

f. Piping under slabs and structures shall be encased in concrete unless otherwise directed by the Engineer.

g. Where piping leaves a structure or concrete encasement, provide a joint capable of angular deflection within 12 inches of the structure for pipes 12-inch and smaller or as shown on the Drawings for larger pipe sizes. Conform to details on the Drawings.

2. Gravity Lines

a. Laying of gravity pipelines shall proceed upgrade with the spigot ends pointing in the direction of flow. Each piece shall be laid true to line and grade and in such manner as to form a close concentric joint with the adjoining pipe and to prevent sudden offsets in the flow line. As the work progresses, the pipe interior shall be cleared of all dirt and debris of every description. Where clearing after laying is difficult because of small pipe size, a suitable swab or squeegee shall be kept in the pipe and pulled forward past each joint immediately after jointing has been completed. Pipe shall not be laid when the condition of the trench or the weather is unsuitable. At times when work is not in progress, open ends of pipe and fittings shall be closed.

3. Warning Tape:

a. Install a single line of plastic warning tape 2.5 feet above the centerline of each buried pipe.

b. Install magnetic warning tape 1 to 1.5 feet below ground and parallel to all buried pipes

c. Spread tape flat with message side up before backfilling.

4. All buried metal parts such as valves and bolt-ups not cement mortar coated shall be coated with two coats of bitumastic in accordance with Section 13111 and encased with two sheet of 8-mil minimum thickness polyethylene to form a continuous and all-encompassing layer of polyethylene between the protected metal and surrounding earth. All polyethylene shall be secured in place with 10-mil polyethylene tape.

5. Cathodic Protection: See Section 13111 for cathodic protection of buried metal pipes.

6. Dielectric Connections: See Section 13111 for insulating dissimilar metals.

D. Installation Specifics

1. CISP

a. Bell and Spigot: Fold and insert one-piece rubber gasket into properly cleaned hub. Apply lubricant to gasket and to spigot. Lubricant shall be a type recommended by the pipe and gasket manufacturers. Push or draw

spigot into gasketed hub with a pulling tool devised especially for this purpose.

b. No Hub: Install in accordance with Cast Iron Soil Pipe Institute Pamphlet No. 100.

c. Comply with UPC and IAPMO IS6-89 and UPC 1991 interpretation of UPC Par. 316 (b)(2).

2. CUP

a. Bends shall be made in a manner that does not crimp or flatten pipe.

b. Dielectric unions shall be installed at connections with ferrous piping.

c. Pipe shall have joints squarely cut clean, soldered joints shall be properly fluxed and heated before solder is placed in the joint. Joints must be driven up tight before solder is added.

d. Install piping tight to slabs, beams, joists, columns, walls, and other permanent elements of the building. Provide space to permit insulation applications, with 1-inch clearance outside the insulation. Allow sufficient space above removable ceiling panels to allow for panel removal.

e. Install drains at low points in mains, risers, and branch lines consisting of a tee fitting, ¾-inch ball valve, and short ¾-inch threaded nipple and cap.

f. Exterior Wall Penetrations: Seal pipe penetrations through exterior walls using steel sleeves and mechanical sleeve seals.

g. Fire Barrier Penetrations: Where pipes pass through fire rated walls, partitions, ceilings, and floors, maintain the fire rated integrity.

h. Install branch connections to mains using tee fittings in main with take-off out the bottom of the main, except for up-feed risers, which shall have take off out the top of the main line.

i. Install strainers on the supply side of each control valve, pressure reducing valve, pressure regulating valve, solenoid valve, inline pump, and elsewhere as indicated. Install nipple and ball valve in blowdown connection of strainers 2 inches and larger.

3. CUT

a. Install in accordance with tube and fitting manufacturers' instructions. Make buried connections in junction boxes.

4. DIP-B

a. Install buried pipe in accordance with AWWA C600.

b. Support and brace encased pipe to support the pipe and to prevent movement during testing and placement of the concrete encasement. The braces and supports shall be erected of materials and by methods that will prevent any future contact of the pipe with the environment surrounding the encasement.

c. Pull the slack out of restrained joints after they are made up.

d. Provide an insulated flanged joint on all buried ductile iron piping 6 inches in diameter and larger within 2 feet of each structure. Provide

an electrolysis test station with a pair of leads on each side of the insulated flange.

e. Wrap buried pipe with polyethylene encasement. See Section 13111.

5. DIP-F

a. Flanged joints shall be made up tight with care being taken to avoid undue strain in the flanges, fittings, and other accessories.

b. Bolt holes shall be aligned for each flanged joint. Bolts shall be full size for bolt holes; use of undersize bolts to make up for misalignment of bolt holes or for any other purpose will not be permitted.

c. Adjoining flange faces shall not be out of parallel to such a degree that the flanged joint cannot be made watertight without overstraining the flange. Any flanged pipe or fitting whose dimensions do not allow the making of a proper flanged joint as specified herein shall be replaced by one of the proper dimensions.

d. Clean flanges before jointing is started.

e. Buried flanged pipe connections shall be made with the smallest practical "bell" hole. After the joint is completed take special care to completely fill the "bell" hole under and around the pipe with compacted backfill.

6. PVC-P and PVC-D

a. Place PVC pipe within the installation areas at least 24 hours prior to installation to permit temperature equalization.

b. Cut pipe ends squarely, ream and deburr inside and out.

c. Solvent Weld Joints: Clean pipe ends and sockets and join in strict conformance with the pipe manufacturer's instructions. Make joints in accordance with ASTM D2855. Handle solvent cements and primers in accordance with ASTM F402.

d. Threaded Connections: Use a short nipple, threaded at one end, socket at the other. Provide thread sealant in accordance with the pipe manufacturer's recommendations. Take care not to overtighten the connection.

3.02 MODIFICATIONS AND CONNECTIONS TO EXISTING PIPING

A. Coordinate with the City of the existing pipeline to be connected to prior to making connection.

B. Perform demolition of existing pipelines and yard piping as shown or necessary to make connection. Preserve, in undamaged condition, piping that is to remain and where connections are to be made as part of the Work.

C. Modify and connect to existing piping in accordance with the materials, joint requirements, welding, coatings, linings, and other provisions of this Section. Where specific details are indicated on the Drawings, provide the pipe connections, joints, fittings, and appurtenances as indicated.

D. Coordinate with the City to have the pipeline de-energized. Affect lock-out/tag-out procedures as necessary to prevent the accidental use of the pipeline.

E. Carefully cut existing pipe using saws and cutting equipment acceptable to Engineer. Do not torch cut metallic pipe for preparation of pipe at connections.

F. Grind ends of steel pipe to remove corrosion and foreign materials where sleeve couplings are to be installed. Power tool clean and epoxy coat pipe ends prior to assembly for sleeve and grooved end-type couplings.

G. Use pipe fittings for modifications and connections. Do not use saddle-type connections unless specifically indicated on the Drawings.

H. Complete pressure testing and disinfection of pipeline and obtain City's approval prior to making connections to existing piping systems, unless otherwise indicated.

3.03 INSTALLATION OF PIPE CONNECTIONS

A. Flexible Couplings and FCAs

1. Prior to installation, thoroughly clean oil, scale, rust, and dirt from the pipe to provide a clean seat for the gasket. Wipe gaskets clean before they are installed.

2. If necessary, flexible couplings and flanged coupling adapter gaskets may be lubricated with soapy water or manufacturer's standard lubricant before installation on the pipe ends.

3. Install in accordance with the manufacturer's instructions and recommendations.

4. Tighten bolts progressively, drawing up bolt on opposite sides a little at a time until all bolts have a uniform tightness. Workers tightening bolts shall be equipped with torque-limiting wrenches.

B. Flexible Expansion Joints

1. Install in accordance with the manufacturer's instructions and recommendations.

2. Connect expansion joints only to full-face metal flanges.

3. Install control rod-compression sleeve assemblies with control rod nuts snug, to relieve stress on adjacent pipe, except at buried locations. Comply with manufacturer's instructions.

4. Paint buried galvanized steel retainer rings, bolts and other appurtenances in accordance with Section 09960.

3.04 PIPE IDENTIFICATION

A. Identify all exposed piping in this project with painting, banding, service name labels, and directional arrows. See Section 15076.

3.05 CLEANING

A. The interior of all pipelines shall be thoroughly cleaned of all dirt, loose scale, sand, and all foreign material prior to connection of pipe to equipment, control and regulating devices, and instrumentation and prior to testing. Pump suction lines shall be cleaned prior to operation of pumps.

B. Cleaning shall be accomplished by flushing with water at a velocity of at least 3 feet per second or by pulling a tightly fitting cleaning ball or swab through the pipe.

C. No test shall commence until the pipeline is completely cleaned to the satisfaction of the Engineer.

3.06 FIELD TESTING

A. All pipelines installed in this project shall be subject to field and acceptance tests as specified in Sections 15951 and 15996.

3.07 DISINFECTION

A. Clean and disinfect potable water systems in accordance with the procedures in Section 11500.

B. Disinfection shall follow successful pressure testing.

C. All new potable water pipe sections shall be disinfected prior to making final connection to existing active operating pipelines.

END OF SECTION

(THIS PAGE LEFT BLANK INTENTIONALLY)

SECTION 15060

PIPE HANGERS AND SUPPORTS

PART 1 - GENERAL

1.01 SECTION INCLUDES

A. Hangers and supports for all piping systems specified in Sections 15050.

B. This section does not include pipe supports for fire sprinkler systems, pipe anchors, guides or seismic restraints.

C. For seismic restraint requirements for piping, see Section 15097.

1.02 REFERENCED SECTIONS

A. The following Sections are referenced in this section

1. Section 01330 – Submittals
2. Section 01610 – Seismic Anchorage and Bracing
3. Section 05501 – Anchor Bolts and Anchoring Devices
4. Section 15050 – Piping Systems
5. Section 15097 – Seismic Restraints for Piping

1.03 QUALITY CONTROL

A. Operating Conditions

1. The hangers and supports specified in this section are provided to resist pipe loads occurring primarily in the downward (gravity) direction. For the purpose of pipe hanger and support selection, this section establishes pipe support classifications based on the operating temperatures of the piping contents. Pipe support classifications are as follows:

a. Hot Systems: A. 120°F to 450°F.

b. Ambient Systems: B. 60°F to 119°F.

c. Cold Systems: C-1. 33°F to 59° F, C-2. -20°F to 32°F.

B. Hanger and Support Selection

1. Select pipe hangers and supports as specified. Base selections upon the pipe support classifications specified in this section and any special requirements which may be specified in the contract documents.

2. Review the piping layout in relation to the surrounding structure and adjacent piping and equipment before selecting the type of support to be used at each hanger point.

3. Design and select hangers and supports to withstand all static and specified dynamic conditions of loading to which the piping and associated equipment may be subjected. As a minimum, consider the following conditions:

a. Weights of pipe, valves, fittings, insulating materials, suspended hanger components, and normal fluid contents.

b. Weight of hydrostatic test fluid or cleaning fluid if normal operating fluid contents are lighter.

c. Reaction forces due to the operation of safety or relief valves.

d. Wind, snow, or ice loadings on outdoor piping.

4. Size hangers and supports to fit the outside diameter of pipe, tubing, or, where specified, the outside diameter of insulation.

5. Where negligible movement occurs at hanger locations, use rod hangers for suspended lines, wherever practical. For piping supported from below, use bases, brackets or structural cross members.

6. For the suspension of size 2-1/2" and larger pipe and tubing, use hangers capable of vertical hanger component adjustment under load.

7. Provide supporting systems which provide for and control the free or intended movement of the piping including its movement in relation to that of connected equipment.

8. Where there is horizontal movement at a suspended hanger location, select hanger components to allow for swing. Do not permit the vertical angle of the hanger rod to exceed 4º at any time.

9. Do not permit contact between a pipe and hanger or support component, constructed of dissimilar metals. Prevent contact between dissimilar metals when supporting copper tubing by using copper-plated, rubber, plastic or vinyl coated, or stainless steel hanger and support components.

10. Unless otherwise specified, existing pipes and supports shall not be used to support new piping.

11. Unless otherwise specified, pipe support components shall not be attached to pressure vessels.

12. Stock hanger and support components shall be used wherever practical.

1.04 INDUSTRY STANDARDS

A. This section contains references to the following documents. They are a part of this section as specified and modified. In case of conflict between this section and the listed documents, the requirements of this section shall prevail.

B. Unless otherwise specified, references to documents shall mean the documents in effect at the time of Advertisement for Bids or Invitation to Bid (or on the effective date of the Agreement if there were no Bids).

C. If referenced documents have been discontinued by the issuing organization, references to those documents shall mean the replacement documents issued or otherwise identified by the organization or, if there are no replacement documents, the last version of the document before it was discontinued.

D. Where document dates are given in the following listing, reference to those documents shall mean the specific document version associated with that date, whether or not the document has been superseded by a version with a later date, discontinued, or replaced.

Reference	Title
AISC Manual of Steel Construction	American Institute of Steel Construction, Manual of Steel Construction, - 13th Edition
CBC	California Building Code
FEDSPEC WW-H-171e	Hangers and Supports, Pipe
MFMA-4	Metal Framing Manufacturer's Association, Metal Framing Standards Publication
MSS SP-58	Manufacturers Standardization Society Pipe Hangers and Supports—Materials, Design and Manufacture
MSS SP-69	Manufacturers Standardization Society Pipe Hangers and Supports—Selection and Application

1.05 SUBMITTALS

A. Provide hanger and support locations, load calculations, and manufacturer layout and detail drawings as part of the submittals for equipment and piping coordination and installation drawings required in Section 15050.

B. The load and support design calculations shall be stamped and signed by a licensed Civil or Structural Engineer in the State of California. Comply with Sections 01610 and 05501. Coordinate calculations with those required by Section 15097.

PART 2 - PRODUCTS

2.01 MANUFACTURERS

A. B-Line

B. Carpenter & Paterson

C. Kin-Line

D. Anvil International

E. Michigan

F. Pipe Shields Incorporated

G. Superstrut

H. Unistrut

I. Or equal as specified in Section 01330

J. Comply with MSS SP-69 and FEDSPEC WW-H-171e for pipe support components and MFMA-4 for framing systems

2.02 PRODUCTS

A. Material

1. Pipe hangers and supports, structural attachments, rack and trapeze supports, fittings and accessories: 316 stainless steel.

2. Nuts, bolts, washers, and other fasteners: Type 316 stainless steel.

3. Safety end caps on all framing chanel.

4. Comply with MSS SP-58 for supports and MFMA-4 for framing systems.

B. Pipe Hangers and Supports

1. Type 1 – Clevis Pipe Hanger, configuration and components equivalent to MSS and FEDSPEC Type 1.

a. Steel pipe (insulated): B-Line B3100, Anvil International 260, or equal, with insulation shield.

b. Steel pipe (uninsulated): B-Line B3100, Anvil International 260, or equal.

c. Cast and ductile iron pipe: B-Line B3102, Anvil International 590, or equal.

d. Copper pipe (uninsulated): B-Line B3104 CT, Anvil International CT-65, or equal.

e. Copper pipe (insulated): B-Line B3100, Anvil International 260, or equal, with insulation shield.

f. Plastic pipe: B-Line B3100 C, Carpenter & Paterson Fig. 100PVC, or equal.

2. Type 2 – J Pipe Hanger, configuration and components equivalent to MSS Type 5

a. Steel pipe: B-Line B3690, Anvil International 67, Michigan model 418, or equal.

b. Copper and plastic pipe: Michigan model 419, Unistrut J 1205N series, or equal.

3. Type 3 – Double Bolt Pipe Clamp, configuration and components equivalent to MSS and FEDSPEC Type 3.

a. Steel pipe (insulated): B-Line B3144, Anvil International 295, or equal, with insulation shield. Insulation shield is optional for hot and ambient systems.

b. Steel pipe (uninsulated): B-Line B3144, Anvil International 295, or equal.

c. Copper pipe (insulated only): B-Line B3144, Anvil International 295, or equal, with insulation shield.

4. Type 4 – Adjustable Roller Hanger, configuration and components equivalent to MSS Type 43 and FEDSPEC Type 44.

a. Steel pipe (insulated): B-Line B3110, Anvil International 181, or equal, with insulation shield.

b. Steel pipe (uninsulated): B-Line B3110, Anvil International 181, or equal.

c. Copper pipe (insulated only): B-Line B3110, Anvil International 181, or equal, with insulation shield.

d. Plastic pipe: B-Line B3110, Anvil International 181, or equal.

5. Type 5 – Single Pipe Roll, configuration and components shall be equivalent to MSS Type 41 and FEDSPEC Type 42.
    a. Steel pipe (insulated): B-Line B3114, Anvil International 171, or equal, with insulation shield.
    b. Steel pipe (uninsulated): B-Line B3114, Anvil International 171, or equal.
    c. Plastic pipe: B-Line B3114, Anvil International 171, or equal.
6. Type 6 – Framing Channel Pipe Clamp
    a. Steel pipe (uninsulated):
        1) Pipe size 3/8” and 1/2”: 16-gage;
        2) 3/4” through 1 1/4”: 14 gage;
        3) 1-1/2” through 3”: 12-gage;
        4) 3 1/2” through 5”: 11- gage;
        5) 6 and 8”: 10-gage;
    b. Michigan Model 431, Powerstrut PS 1100, Unistrut P 1109 series, or equal.
    c. Steel pipe (insulated): Pipe clamp as described in Paragraph 2.02 B.6.a with insulation shield.
    d. Copper (uninsulated) and plastic pipe:
        1) Pipe size 3/8” and 1”: 16-gage;
        2) 1-1/4” and 1-1/2”: 14-gage;
        3) 2” through 3”: 12-gage;
        4) 4”: 11-gage;
        5) Clamp: copper-plated, plastic coated or lined with dielectric material;
        6) Michigan model 432, Powerstrut PS 1200, Unistrut P 2024C and P 2024PC series, or equal.
    e. Copper pipe (insulated): Pipe clamp shall be as described in Paragraph 2.02 B.6.a with insulation shield.
7. Type 7 – U-Bolt Configuration equivalent to MSS and FEDSPEC Type 24.
    a. Steel pipe (uninsulated): Anvil International. 137, B-Line B3188, or equal.
    b. Steel pipe (insulated): Anvil International. 137, B-Line B3188, or equal, with insulation shield.
    c. Cast and ductile iron pipe: Anvil International. 137, B-Line B3188, or equal.
    d. Copper pipe (uninsulated): Carpenter & Paterson Fig. 222 CT, B-Line B3501 CT, Anvil International. 137C, or equal.
    e. Copper pipe (insulated): Anvil International. 137, B-Line B3188, or equal, with insulation shield.
    f. Plastic pipe: Anvil International. 137C, Michigan model 151, B-Line B3188 C, or equal.

8. Type 8 – Adjustable Pipe Roll Support
    a. Steel pipe (insulated): B-Line B3122, Anvil International. 177, or equal, with insulation shield.
    b. Steel pipe (uninsulated): B-Line B3122, Anvil International. 177, or equal.
    c. Copper pipe (insulated only): B-Line B3122, Anvil International. 177, or equal, with insulation shield.
    d. Plastic pipe: B-Line B3122, Anvil International. 177, or equal.
9. Type 9 – Welded Pipe Stanchion
    a. Minimum material thickness: standard schedule pipe, cut to match contour of the pipe elbow.
    b. Limit use of this support to ambient systems only.
10. Type 10 – Pipe Stanchion Saddle and Yoke, comply with MSS Type 37 and FEDSPEC Type 38.
    a. Steel pipe (insulated): Carpenter & Paterson Fig. 125, B-Line B3090, or equal, with insulation shield.
    b. Steel pipe (uninsulated): Carpenter & Paterson Fig. 125, B-Line B3090, or equal.
    c. Cast and ductile iron pipe: Carpenter & Paterson Fig. 125, B-Line B3090 NS, or equal.
    d. Copper pipe (uninsulated): Carpenter & Paterson Fig. 125, B-Line B3090, or equal, with insulation shield or lined with dielectric material.
    e. Copper pipe (insulated): Carpenter & Paterson Fig. 125, B-Line B3090, or equal, with insulation shield.
    f. Plastic pipe: Carpenter & Paterson Fig. 125, B-Line B3090, or equal.
11. Type 11 – Offset Pipe Clamp, Provided with configuration and components specified using standard designs offered by a pipe hanger component manufacturer.
    a. Steel pipe (insulated): B-Line B3148, Anvil International 103, or equal, with insulation shield.
    b. Steel pipe (uninsulated): B-Line B3148, Anvil International 103, or equal.
    c. Cast and ductile iron pipe: B-Line B3148 NS, Anvil International 103, or equal.
    d. Copper pipe (insulated): B-Line B3148, Anvil International. 103, or equal, with insulation shield.
    e. Copper pipe (uninsulated): B-Line B3148, Anvil International. 103, or equal, lined with dielectric material.
    f. Plastic pipe: B-Line B3148, Anvil International. 103, or equal.
    g. Vertical pipe support applications: as specified above except do not use insulation shields for insulated pipe.

12. Type 12 – Riser Clamp, configuration and components equivalent to MSS and FEDSPEC Type 8.

    a. Steel pipe (insulated): B-Line B3373, Anvil International 261, or equal.

    b. Steel pipe (uninsulated): B-Line B3373, Anvil International 261, or equal.

    c. Cast and ductile iron pipe: B-Line B3373, Anvil International 261, or equal.

    d. Copper pipe (insulated): B-Line B3373 CT, Anvil International CT-121, Michigan model 511, or equal.

    e. Copper pipe (uninsulated): B-Line B3373 CT, Anvil International CT-121, Michigan model 511, or equal.

    f. Plastic pipe: B-Line B3373, Anvil International. 261c, or equal.

13. Type 13 – Framing Channel Pipe Strap, configuration equivalent to MSS Type 26.

    a. Steel pipe (uninsulated): Superstrut No. C-708-U, Powerstrut PS 3126, Kin-Line No. 477, or equal.

    b. Steel pipe (insulated): Superstrut No. C-708-U, Powerstrut PS 3126, Kin-Line No. 477, or equal, with insulation shield.

    c. Copper pipe (uninsulated): Superstrut No. C-708-U, Powerstrut PS 3126, Kin-Line No. 477, or equal, with insulation shield or lined with dielectric material.

    d. Copper pipe (insulated): Superstrut No. C-708-U, Powerstrut PS 3126, Kin-Line No. 477, or equal, with insulation shield.

    e. Plastic pipe: Superstrut No. C-708-U, Powerstrut PS 3126, Kin-Line No. 477, or equal.

C. Rack and Trapeze Supports

1. General

    a. Unless otherwise specified, provide trapeze and pipe rack components minimum thickness of 12 gage, with a maximum deflection 1/240 of the span.

2. Type 20 – Trapeze Pipe Support

    a. For trapeze pipe support cross members, use framing channel as specified in Paragraph 2.02 E.5. For flat plate fittings, 1-5/8” square standard design manufactured by framing channel manufacturer, Unistrut P2471, B-Line B202-2, or equal.

3. Type 21 – Pipe Rack Support

    a. For post and cross members, use framing channel as specified in Paragraph 2.02 E.5. For pipe rack fittings, use standard design manufactured by framing channel manufacturer. For 90º fittings, use gusseted Unistrut P2484, B-Line B844, or equal. Provide post base fittings as specified in Paragraph 2.02 D.5.

D. Structural Attachments

1. Type A –Insert For Concrete:

    a. Concrete inserts: Comply with MSS and FEDSPEC Type 18.

b. Anvil International 282, Carpenter & Paterson Fig. 108, or equal.

2. Type B – Side Beam Bracket

   a. Comply with MSS Type 34 and FEDSPEC Type 35.

   b. Anvil International. 202, B-Line B3062, or equal.

3. Type C –Beam Clamp with Extension Piece

   a. Comply with MSS and FEDSPEC Type 30.

   b. Anvil International. 218 with Fig. 157 extension piece, B-Line B3054, or equal.

4. Type D – Beam Clamp with Eye Nut

   a. Beam clamp and eye nut: forged stainless steel.

   b. For configuration and components, comply with MSS and FEDSPEC Type 28.

   c. Anvil International. 292, Carpenter & Paterson Fig. 297, or equal.

5. Type E – Framing Channel Post Base

   a. Standard design offered by framing channel manufacturer.

   b. Single channel: Unistrut P2072A, B-Line B280, or equal.

   c. Double channel: Unistrut P2073A, B-Line B281, or equal.

6. Type F – Welded Beam Attachment

   a. Comply with MSS and FEDSPEC Type 22. B-Line B3083, Anvil International. 66, or equal.

7. Type G – Welded Steel Bracket

   a. Comply with MSS Type 32 and FEDSPEC Type 33 for medium welded bracket.

   b. Comply with MSS Type 33 and FEDSPEC Type 34 for heavy welded bracket.

8. Type H –Bracket

   a. Carpenter & Paterson Fig. 340, or equal.

9. Type J – Adjustable Beam Attachment

   a. Carpenter & Paterson Fig. 151, B-Line B3082, or equal.

10. Type K – Double Channel Bracket

    a. Wall channel: single channel framing channel as specified in Paragraph 2.02 E.5.

    b. Cantilever bracket: double framing channel assembly, Unistrut P2542 through P2546, B-Line B297-12 through B297-36, or equal.

11. Type L – Single Channel Bracket

    a. Wall channel: single channel framing channel as specified in Paragraph 2.02 E.5.

    b. Cantilever bracket: a single framing channel assembly, Unistrut P2231 through P2234, B-Line B198-6, B198-12, B196-18 and B196-24, or equal.

12. Type M – Wall Mounted Channel

a. Wall channel: single channel framing channel as specified in Paragraph 2.02 E.5.

13. Type N – Pipe Stanchion Floor Attachment

a. Base plate: 1/2” minimum thickness.

b. Make anchor bolt holes 1/16” larger than the anchor bolt diameter.

c. Fill space between the base plate and the floor with nonshrink grout.

E. Accessories

1. Hanger Rods

a. Rods: threaded on both ends or continuous threaded and sized as specified.

2. Weldless Eye Nut

a. Eye nut: forged stainless steel and complying with MSS and FEDSPEC Type 17.

b. Manufacturer: Anvil International. 290, B-Line B3200, or equal.

3. Welded Eye Rod

a. Weld-eye rod closed. Make inside diameter of eye a bolt diameter 1/8” larger than the rod diameter.

b. Manufacturer: Anvil International. 278, B-Line B3211, or equal.

4. Turnbuckle

a. Turnbuckle: forged stainless steel and complying with MSS and FEDSPEC Type 13.

b. Manufacturer: Anvil International. 230, B-Line B3202, or equal.

5. Framing Channel

a. Framing channel: 1-5/8” square, roll formed, 12-gage.

b. Provide channel with a continuous slot along one side with in-turned clamping ridges.

c. Single channel: Unistrut P1000, B-Line B22, or equal.

d. Double channel: Unistrut P1001, B-Line B22A, or equal.

e. Triple channel: Unistrut P1004A, B-Line B22X, or equal.

f.

PART 3 - EXECUTION

3.01 HANGER AND SUPPORT LOCATIONS

A. Locate hangers and supports as near as possible to concentrated loads such as valves, flanges, etc.

B. Locate hangers, supports and accessories within the maximum span lengths specified in the contract documents to support continuous pipeline runs unaffected by concentrated loads. Indicate hanger and support locations and components on the piping layout

drawings required by Paragraph 1.05. For pipe support submittals, provide a complete cross reference of each support by mark number, including the page number on which each mark number can be found. Set up the cross reference to permit review from the mark numbers to the drawings, not the other way around.

C. Locate at least one hanger or support within 2’ from a pipe change in direction.

D. Locate hangers and supports to ensure that connections to equipment, tanks, etc., are substantially free from loads transmitted by the piping.

E. Where piping is connected to equipment, a valve, piping assembly, etc., that will require removal for maintenance, support piping so temporary supports are not necessary.

F. Locate pipe supports to prevent "pockets" from forming in pipe between supports due to excessive deflection under load from weight of pipe, medium in the pipe, insulation, valves and fittings.

3.02 INSTALLATION

A. Construct welded and bolted attachments to the building structural steel which comply with the AISC Manual of Steel Construction. Unless otherwise specified, do not drill or burn holes in the building structural steel.

B. Do not use hanger components for purposes other than for which they were designed. Do not use components for rigging and erection purposes.

C. Install items to be embedded before concrete is poured. Fasten embedded items securely to prevent movement when concrete is poured.

D. Use embedded anchor bolts that satisfy the CBC provisions instead of concrete inserts for supports in areas below water surface or normally subject to submergence.

E. When hanger and support components are in contact with plastic pipe, make sure the components are free of burrs and sharp edges.

F. Ensure rollers roll freely without binding.

G. Roughen finished floor to a ¼ inch amplitude beneath structural attachments and framing channel post bases prior to grouting. Place grout, free of voids and foreign material, between base plate and floor.

H. Cut and drill base plates to specified dimensions prior to welding stanchions or other attachments and prior to setting anchor bolts.

I. Provide plastic or rubber end caps at the exposed ends of all framing channels that are located up to 7’ above the floor.

3.03 ADJUSTMENTS

A. Adjust hangers and supports to obtain required pipe slope and elevation.

B. Use shims made of material that is compatible with the piping material.

C. Adjust stanchions prior to grouting their base plates.

END OF SECTION

SECTION 15076
PIPING AND VALVE IDENTIFICATION SYSTEMS

PART 1 - GENERAL

1.01 SECTION INCLUDES

A. Identification systems for buried and exposed piping and valves.

1.02 REFERENCED SECTIONS

A. The following Sections are referenced in this Section

1. Section 01330 – Submittals
2. Section 15110 – Valves and Appurtenances

1.03 REFERENCES

A. ANSI - American National Standard Specifications

1.04 SUBMITTALS

A. Comply with Section 01330.

B. Submit the following items:

1. Product Data: Manufacturer's catalog information and description of items proposed for use.
2. Shop Drawings: Scaled drawings of custom-made signs and tags, showing style, text size, and colors.
3. Manufacturer's standard color palette for color selection.
4. Samples of the materials to be used for piping and valve identification.

PART 2 - PRODUCTS

2.01 MANUFACTURERS

A. Brady Company;

B. Seton Name Plate Corporation;

C. Or equal.

2.02 PIPE MARKERS

A. Conform to ANSI A13.1.

B. Type: Plastic, mechanically attached snap-around or strap-on type; do not use adhesive applied type.

C. Use: Designed for use on dirty, rusty, wet, oily, or rough pipes. Indoor or outdoor use. Service temperature range of -40ºF to 180ºF

D. Text: Non-fade ink; lettering size as indicated below:

Outside Diameter of Pipe (inches) [(a)]	Length of Color Field (inches)	Size of Letters (inches)
Less than 1-1/2	8	1/2
1-1/2 through 2	8	3/4
2-1/2 through 6	12	1-1/4
8 through 10	24	2-1/2
Greater than 10	32	3-1/2
[(a)] For double contained pipe, outside pipe diameter shall be that of the containment pipe.		

E. Provide directional arrows on labels to indicate flow direction.

F. Pipe Marker Schedule

1. Colors below are not final. Colors may be modified to be consistent with painted pipe color coding. Verify colors with City. Colors will be selected from manufacturer's standard.

Text	Field Color	Letter Color
Ammonia Sulfate	Orange	Black
Artesian Relief	Green	White
Backwash	Green	White
Drain	Green	White
Compressed Air	Blue	White
Ferric Chloride	Orange	Black
Filtered Water	Green	White
Filter-to-Waste	Green	White
Flush Line	Green	White
Potable Water	Green	White
Raw Water	Green	White
Sample	Green	White
Sewer	Green	White
Hypochlorite	Orange	Black
Storm Drain	Green	White
Surface Wash	Green	White
Treated Water	Green	White

2.03 VALVE TAGS

A. Plastic, fiberglass, or plastic material, 2-inch square with grommeted hole.

B. The tags shall be attached to valves with a brass jack chain. For buried installations use a nylon strap.

C. Lettering shall be stamped or cut into the tag at least 3/16-inch high.

PART 3 - EXECUTION

3.01 PIPING IDENTIFICATION

A. Identify exposed piping in this project with pipe markers indicating system name and flow direction.

B. Apply pipe markers where piping enters or leaves the wall or floor of a structure, adjacent to tanks or other hydraulic containments, at each valve, at each piping change in direction, and apply along piping runs not exceeding 16 feet on center.

C. Orient the pipe marker with the direction arrows pointing in the direction of flow.

D. Locate pipe markers for easy reading. Where pipes are located above normal line of vision, the lettering and directional arrows shall be placed below the horizontal centerline of the pipe. Where pipes are below normal line of vision, lettering and directional arrows shall be above the horizontal centerline of the pipe.

3.02 VALVE IDENTIFICATION

A. Label valves with a valve tag identifying the pipeline contents, and either its valve number, or the area or item served by the valve for valves without a valve number.

B. Contents shall be as designated in the valve and accessory system schedule in Section 15110.

END OF SECTION

(THIS PAGE LEFT BLANK INTENTIONALLY)

SECTION 15097
SEISMIC RESTRAINTS FOR PIPING

PART 1 - GENERAL

1.01 SECTION INCLUDES

A. Seismic restraints for bracing all piping systems specified in Section 15050.

1.02 REFERENCED SECTIONS

A. The following Sections are referenced in this Section

1. Section 01330 – Submittals
2. Section 01610 – Seismic Anchorage and Bracing
3. Section 05501 – Anchor Bolts
4. Section 15050 – Piping Systems

1.03 DEFINITIONS

A. Longitudinal Direction: Direction parallel to the pipe axis.

B. Lateral Direction: Direction perpendicular to the pipe axis.

1.04 OPERATING CONDITIONS

A. Provide seismic restraints, specified in this section, to resist pipe movements and loads occurring as a result of an earthquake or other seismic event.

B. Unless otherwise specified, brace all piping to resist seismic loading caused by forces applied at the individual pipe's center of gravity. For seismic loading see Section 01610.

1.05 RESTRAINT SELECTION

A. Unless otherwise specified, select, locate and provide seismic restraints for piping in accordance with the contract documents.

B. Review the piping layout in relation to the surrounding structure and adjacent piping and equipment before selecting the restraint to be used at each point.

C. Seismic restraints may be omitted from the following installations:

1. Gas piping less than 1" inside diameter.
2. Piping in boiler and mechanical rooms less than 1-1/4" inside diameter.
3. All other piping less than 2-1/2" inside diameter.
4. All piping suspended by individual hangers 12" or less in length from the top of the pipe to the bottom of the support for the hanger.

D. Do not brace piping systems to dissimilar parts of a building or to dissimilar building systems that may respond in a different mode during an earthquake. Examples: wall and a roof; solid concrete wall and a metal deck with lightweight concrete fill.

E. Size restraints to fit the outside diameter of the pipe, tubing, or, where specified, the outside diameter of insulation.

F. Do not permit contact between a pipe and restraint component of dissimilar metals. Prevent contact between dissimilar metals when restraining copper tubing by the use of copper-plated, rubber, plastic or vinyl coated, or stainless steel restraint components.

G. Do not use branch lines to brace main lines.

H. Do not permit seismic bracing to limit the expansion and contraction of the piping system.

1.06 SUBMITTALS

A. Provide seismic restraint locations, load calculations, and manufacturer's drawings as specified in Paragraph 3.01 as part of the submittals for equipment and piping coordination and installation drawings required in Section 15050.

B. Provide seismic restraint load calculations for each seismically restrained pipe system prepared and signed by a civil or structural engineer currently registered in the State of California. See Section 01610 for seismic loading required.

PART 2 - MANUFACTURERS

2.01 MANUFACTURERS

A. Carpenter & Patterson.

B. B-Line.

C. Kin-Line.

D. Anvil International.

E. Michigan.

F. Pipe Shields Incorporated.

G. Superstrut.

H. Unistrut.

I. Or equal as specified in Section 01330.

2.02 PRODUCTS

A. Materials

1. Restraints, including braces and fittings, pipe and structural attachments, trapeze restraints, and accessories: Type 316 stainless steel.

2. Nuts, bolts and washers, fittings and accessories: Type 316 stainless steel.

3. Comply with MSS SP-58

B. Pipe Attachments

1. Type 1s - Clevis Restraint Attachment

a. Provide Type 1, clevis pipe hanger, as specified in Section 15060, 2.02.B.

2. Type 3s - Double Bolt Restraint Clamp:

a. Provide Type 3, double bolt pipe clamp, as specified in Section 15060, 2.02.B.

3. Type 4s - Roller Restraint Attachment

   a. Provide Type 4, adjustable roller hanger, as specified in Section 15060, 2.02.B.

   b. Size hold down strap as follows:

      1) 1” through 2” Pipe: 1” by 1/8” thick

      2) 2-1/2” through 4” Pipe: 1-1/4” by 3/l6” thick

      3) 6” Pipe: 2” by 3/l6” thick

      4) 8” Pipe: 2-1/2” by 3/16” thick

      5) 10” through 16” Pipe: 2-1/2” by 1/4” thick

      6) 20” Pipe: 3” by 1/4” thick

      7) 24” Pipe: 3” by 3/8” thick.

4. TypeE 7s - U-Bolt Restraint

   a. Provide Type 7, U-bolt, as specified in Paragraph 15060, 2.02.B.

5. Type 13s - Framing Channel Strap Restraint

   a. Provide Type 13, framing channel pipe strap, as specified in Paragraph 15060, 2.02.B.

6. Type 14s - Pipe Clamp Restraint

   a. Provide with configuration and components equivalent to MSS and FEDSPEC Type 4.

   b. Rod attachment and longitudinal brace connection stud shall be fabricated and welded by the manufacturer.

   c. Steel pipe (insulated): Superstrut No. S-720, Kin-Line No. S475, or equal, with insulation shield.

   d. Steel pipe (uninsulated): Superstrut No. S-720, Kin-Line No. S475, or equal.

   e. Cast and ductile iron pipe: Superstrut No. S-720, Kin-Line No. S475, or equal.

   f. Copper pipe (insulated): Superstrut No. S-720, Kin-Line No. S475, or equal, with insulation shield.

   g. Copper pipe (uninsulated): Superstrut No. S-720, Kin-Line No. S475, or equal, with insulation shield or dielectric lining.

   h. Plastic pipe: Superstrut No. S-720, Kin-Line No. S475, or equal.

C. Trapeze Restraints

1. General

   a. Unless otherwise specified, provide trapeze members with a minimum steel thickness of 12-gage, with a maximum deflection 1/240 of the span.

2. Type 20s - Single Channel Lateral Restraint

   a. Trapeze restraint cross member

      1) 1-5/8” square framing channel, Unistrut P1000, B-Line B22, Superstrut A-1200, or equal.

b. Pipe attachments

1) Type 13s or Type 7s specified in Paragraph 2.02.B.

c. Rod stiffeners and lateral brace

1) As specified in Paragraph 2.02.D.

3. Type 21s - Double Channel Lateral Restraint

a. Trapeze restraint cross member

1) a double channel manufactured assembly such as Unistrut P1001, B-Line B22A, Superstrut A-1202, or equal.

2) Pipe attachments

a) Type 13s or Type 7s specified in Paragraph 2.02.B.

b. Rod stiffeners and lateral brace

1) As specified in Paragraph 2.02.D.

4. Type 22s - Double Channel Longitudinal Restraint

a. Trapeze restraint cross member: a double channel manufactured assembly such as Unistrut P1001, B-Line B22A, Superstrut A-1202, or equal.

b. Pipe attachments

1) Type 13s or Type 7s specified in Paragraph 2.02.B.

c. Rod stiffeners, longitudinal and lateral braces

1) As specified in Paragraph 2.02.D.

D. Braces and Fittings

1. Seismic Brace Fitting

a. Provided for use with industry standard framing channel.

b. Provide welded construction, two-piece linked fitting.

c. Provide means to reduce noise and vibration transmission between the linked fitting parts.

d. Manufacturers

1) Superstrut C-749N series seismic brace,

2) Kin-Line No. 633 seismic connector fitting,

3) or equal as defined in Section 01330.

2. Hanger Rod Stiffener Assembly

a. Rod stiffener channel

1) 1-5/8” square framing channel, Unistrut P1000, B-Line B22, Superstrut A-1200, or equal.

b. Rod stiffener clamps, complete with channel nut

1) Superstrut ES-142, Kin-Line No. 635, or equal as defined in Section 01330.

3. Type A1 Seismic Brace

   a. Provide 1-5/8” square framing channel, Unistrut P1000, B-Line B22, Superstrut A-1200, Kin-Line No. 4112, or equal as defined in Section 01330.

4. Type A2 Seismic Brace

   a. Provide 1-5/8” wide by 3-3/4” deep framing channel, Unistrut P5000, B-Line B11, Superstrut H-1200, Kin-Line No. 8212, or equal as defined in Section 01330.

E. Structural Attachments

1. General

   a. Unless otherwise specified, provide hanger rod structural attachments as specified in Section 15060.

   b. Structural attachments for longitudinal and lateral seismic braces: as specified in Paragraph 2.02.D.

2. Type SA-1 Attachment

   a. Brace fitting: as specified in Paragraph 2.02.D.

   b. Concrete anchors

      1) As specified in Section 05501 with embedment and location dimensions as specified.

3. Type SA-2 Attachment

   a. Brace fitting: as specified in Paragraph 2.02.D.

   b. Concrete anchors

      1) As specified in Section 05501 with embedment and location dimensions as specified.

   c. Framing channel

      1) As specified in Paragraph 2.02.F.

4. Type SA-3 Attachment

   a. Brace fitting

      1) As specified in Paragraph 2.02.D.

   b. Cap screw, lockwasher and hex nut materials and finish: compatible with structural steel material.

5. Type SA-4 Attachment

   a. Brace fitting

      1) As specified in Paragraph 2.02.D.

6. Type SA-5 Attachment

   a. Brace fitting

      1) As specified in Paragraph 2.02.D.

      2) Angle: 4” x 3” x 3/8”.

F. Accessories

1. Hanger Rods

a. Threaded on both ends or continuous threaded and sized as specified.

2. Framing Channel

a. Roll formed, 12-gage.

b. Provide channel with a continuous slot along one side with in-turned clamping ridges.

c. Manufacturers

1) Unistrut P1000 series,

2) B-Line B22 series,

3) Superstrut A-1200 series,

4) or equal as specified in Section 01330.

3. Rod Coupling

a. Provide with sight hole in center of coupling body.

b. Manufacturers

1) Anvil International. 135,

2) Superstrut H-119,

3) or equal as specified in Section 01330.

PART 3 - EXECUTION

3.01 PIPE RESTRAINT LOCATIONS

A. Locate the first seismic restraint on a piping system not more than 10’ from the main riser, entrance to a building or piece of equipment.

B. Brace cast iron pipe on each side of a change in direction of 90º or more. Brace or stabilize joints in risers between floors.

C. Brace no-hub and bell and spigot cast iron soil pipe longitudinally every 20’ and laterally every 10’.

D. Lateral bracing for one pipe section may also act as longitudinal bracing for the pipe section connected perpendicular to it, if the bracing is installed within 24” of the elbow or tee of the same size.

E. Indicate seismic restraint locations and components on the piping layout drawings required by Section 15050.

F. Provide a legend giving load information and restraint component selection at each restraint location.

G. Provide seismic restraint load calculations conforming to the requirements specified in Paragraph 1.06.

3.02 INSTALLATION

A. Use rod stiffener assemblies at seismic restraints for hanger rods over 6” in length. Provide a minimum of two rod stiffener clamps on any rod stiffener assembly.

B. Install lateral and longitudinal bracing between 45º above and 45º below horizontal, inclusive, relative to the horizontal centerline of the pipe.

C. Construct welded and bolted attachments to the building structural steel which comply with the AISC Manual of Steel Construction. Do not drill or burn holes in the building structural steel without approval of the City

D. Use embedded anchor bolts instead of concrete inserts for seismic brace installations in areas below water surface or normally subject to submerging.

E. Provide restraint components in contact with plastic pipe which are free of burrs and sharp edges.

F. Ensure rollers roll freely without binding.

G. Provide plastic or rubber end caps at the exposed ends of all framing channels that are located up to 7’ above the floor.

END OF SECTION

(THIS PAGE LEFT BLANK INTENTIONALLY)

SECTION 15110

VALVES AND APPURTENANCES

PART 1 - GENERAL

1.01 SECTION INCLUDES

A. Furnish and install all valves and appurtenances as shown on the Drawings and described herein.

1.02 REFERENCED SECTIONS

A. The following Sections are referenced in this Section

1. Section 01330 – Submittals
2. Section 09960 – High Performance Coatings
3. Section 11380 – Chemical Feed Equipment
4. Section 13224 – Pressure Filter
5. Section 15050 – Piping Systems
6. Section 15076 – Piping and Valve Identification Systems
7. Section 15400 – Building Plumbing and Fixtures

1.03 REFERENCES

A. ANSI – American National Standards Institute

B. ASTM – American Society for Testing and Materials

C. AASHTO – American Association of State Highway Transportation Officials

D. AWWA – American Water Works Association

E. NSF – National Sanitation Foundation

1.04 SUBMITTALS

A. Comply with Section 01330.

B. Submit the following items:

1. Product data for valves and accessories to show that the items conform to the Specification requirements.
2. Manufacturer's installation, operation, and maintenance manuals/bulletins and spare parts list.

PART 2 - PRODUCTS

2.01 GENERAL REQUIREMENTS

A. All materials in contact with the potable water, process water to be treated to potable water, or liquids (e.g., chemicals) to be added to the process/potable water shall be lead-free and shall meet the requirements of California Code of Regulations Title 22 Chapter 16 Article 7 regarding direct and indirect additives.

B. All valves of each type shall be the product of one manufacturer.

C. Valves shall be complete with all necessary operating hand wheels, chain wheels, extension stems, valve boxes, floor stands, worm and gear operators, operating nuts, chains, hardware and fasteners, and wrenches which are required for the proper completion of the work included under this section.

D. Valves shall be furnished full line size unless specifically called out to be of reduced size. Unless otherwise specified, valves shall be rated for 150 psi working pressure minimum.

E. All exposed valves shall be furnished with operators, handwheels, levers, or other suitable type wrench including handles as specified herein or as shown on the Drawings.

F. Valves 4-inch and larger located more than 7 feet above the floor level shall be furnished with chain operators. Chains shall be galvanized and shall extend to within 3 feet of the floor. Provide hook so that chain may be stored clear of walkways. All buried valves shall be provided with 2-inch-square operating nut and valve boxes.

G. For all buried valves provide valve boxes and extended stems to within 12 inches of finished grade.

H. Unless otherwise indicated, the direction of rotation of the wheel, wrench nut or lever to open the valve shall be counterclockwise.

I. All exposed valves and valve operators shall have a non-bleeding shop coat, unless otherwise specified.

2.02 SYSTEM DESIGNATION

A. Most valve and accessories to be furnished and installed are grouped based on service application. Each group is identified by valve and accessory system letter designation.

1. System A – Clean water, air
2. System B – Drainage, wastewater
3. System C – Chemicals, sample water

B. The schedule below lists the valve and accessory system that shall be used for each piping service.

Abbr.	Piping Service	Valve and Accessory System	Notes
Process			
AR	Artesian Relief	System B	
BW	Backwash Water	System A	
FL	Flush Line	System B	
FTW	Filter-to-Waste	System A	
FW	Filtered Water	System A	1
RW	Raw Water	System A	1
SA	Sample	System C	2
SW	Surface Wash	System A	
TW	Treated Water	System A	1

Abbr.	Piping Service	Valve and Accessory System	Notes
Chemicals			
AMS	Ammonia Sulfate	System C	2
FC	Ferric Chloride	System C	2
HYPO	Sodium Hypochlorite	System C	2
Water			
PW	Potable Water	System A	3
Air			
CA	Compressed Air	System A	
VENT	Vent	-	
Drain			
D	Building Drain	-	
DR	Process Drain	System B	
SAD	Sample Drain	System C	
SD	Storm Drain	-	
SS	Sanitary Sewer	-	

1. Refer to Section 13224 and Drawings for valves to be supplied by the Pressure Filter System Supplier.
2. Refer to Section 11380 for strainers, pulsation dampeners, pressure relief valves, back pressure valves, calibration cylinders, and injection assemblies for chemical services.
3. Refer to Section 15400 for building plumbing system valves and fixtures.

2.03 SYSTEM A – CLEAN WATER, AIR

A. Air Valves: AWWA C512, except as modified herein.

1. Air Release Valves (ARV)

a. Function: Releases accumulated air under pressure at pipeline high points.

b. Materials: Cast or ductile iron body; stainless steel float.

c. Pressure Rating: 150 psi.

d. Manufacturers: Apco Series 200; equivalent by Valmatic; or equal.

2. Combination Air Valves (CAV)

a. Function: Exhausts large volumes of air during pipeline filling, releases accumulated air under pressure and allows air back in when pipeline pressure drops below atmospheric pressure.

b. Features

1) Provide an anti-slam, poppet-type valve disc that allows air to pass but provides a regulated closure during passage of water.

2) Low seating pressure.

c. Materials: Cast or ductile iron body; stainless steel float.

d. Pressure Rating: 150 psi.

e. Manufacturers: Apco Series 140C or 150C; equivalent by Valmatic; or equal.

3. Air/Vacuum Valve

a. Function: Allows large volume of air to be exhausted from pipeline as it is filled or admitted into pipeline as it is drained.

b. Features

1) Provide an anti-slam, poppet-type valve disc that allows air to pass but provides a regulated closure during passage of water.

2) Low seating pressure.

c. Materials: Cast or ductile iron body; stainless steel float.

d. Pressure Rating: 150 psi.

e. Manufacturers: Apco 141DAT through 146DAT; equivalent by Valmatic; or equal.

B. Ball Valves (up to 4-inch on metal piping)

1. Type: Standard port with lever operator.

2. Connections: Threaded.

3. Materials: Bronze body ASTM B584 Alloy 83600 or 84400, chrome-plated ball, teflon seats.

4. Manufacturers: Apollo 70-100; Watts B-6000; or equal.

C. Butterfly Valves

1. Type: Short body flanged, except wafer body where specified elsewhere or shown on the Drawings as wafer.

2. Materials

a. Body: Cast Iron; ASTM A126, Class B, or ASTM A48, Class 40.

b. Disk: Cast or ductile iron with Ni-Chrome or Type 316 stainless steel edge.

c. Valve Shaft: Type 304 or Type 316 stainless steel.

d. Seats: Buna-N.

3. Construction

a. Seats: Applied to body. Cartridge type seats with retaining rings are not acceptable.

b. Disk to Shaft Connection: Stainless steel pins or torque plug.

c. Valve Diameter Limitation: Internal diameter of valve at the throat shall be no less than the nominal diameter of the valve less 1-½ inches.

4. Finish

a. Exposed Exterior: Shop prime compatible with field applied finish coats. Refer to Section 09960.

b. Buried Exterior: Shop coat with high-solids epoxy, 12 mils minimum.

c. Interior: Shop line with two-component, high solids epoxy, AWWA C550.

5. Actuators

a. Manual

1) Provide valve position indicators on all actuators.

2) Type: Traveling nut, self-locking. Designed to hold valve in any intermediate position between fully open and fully closed without creeping or fluttering

3) Buried: Designed for buried service, watertight up to 10 psi. Provide 2-inch-square standard AWWA operating nut, with extension stem to reach the ground surface as shown on the Drawings, and with a ground level position indicator.

b. Pneumatic

1) Factory sealed and lubricated for life.

2) Minimum design life: Two million operations

3) Operating medium: Compressed air

4) Operating air pressure: 80 psi

5) Provide minimum two-days start up services.

6) Provide adapters as needed to connect actuators to butterfly valves.

6. Testing: Test in accordance with AWWA C504, except that leakage test shall be in both directions.

7. Manufacturers: Pratt; DeZurik; or equal.

D. Gate Valves

1. Through 2-inch

a. Type: Rising stem, screw in bonnet, solid wedge disc, handwheel operated.

b. Pressure Rating: 200 psi WOG.

c. Connections: Threaded.

d. Materials: All bronze, UNS 83600, ASTM B62, B505 or B584.

e. Manufacturers: Crane No. 428; equivalent by Jenkins; or equal.

E. Pressure Sustaining/Reducing Valve

1. Type: Hydraulic pilot controlled, globe style for sustaining upstream pressure while reducing downstream pressure.

2. Connections: Flanged, 150-pound ANSI.

3. Materials: Ductile iron body with fusion epoxy lining; stainless steel and/or bronze trim; Buna-N elastomers.

4. Rating: 175 psi.

5. Manufacturers: Cla-Val; Singer; or equal.

F. Pressure Sustaining/Reducing & Solenoid Valve

1. Type: Hydraulic pilot controlled, globe style for sustaining upstream pressure while reducing downstream pressure with solenoid override to close valve.

2. Connections: Flanged, 150-pound ANSI.

3. Materials: Ductile iron body with fusion epoxy lining; stainless steel and/or bronze trim; Buna-N elastomers.

4. Rating: 175 psi.

5. Manufacturers: Cla-Val; Singer; or equal.

G. Swing Check Valves

1. Pressure Rating: 250 psi.

2. Type: Resilient seated check valve, AWWA C508.

3. Connections: Flanged, 125-pound ANSI.

4. Materials: Ductile iron body, bonnet, and disc.

5. Manufacturers: American Flow Control Series 2100; or equal.

H. Refer to Section 15400 for building plumbing system valves and fixtures.

2.04 SYSTEM B – DRAINAGE, WASTEWATER

A. Plug Valves

1. Type: Resilient faced eccentric plug.

2. Pressure Rating: 150 psi.

3. Connections: Flanged, 125-pound ANSI, except threaded connections may be used for 2-inch valves.

4. Materials: Cast iron body, welded nickel seat, NBR or Buna-N coated plug, NBR or Buna-N packing or U-cup stem seal. Valves shall have interior and exterior metal surfaces other than the plug and valve seat coated with two coats of high-solids epoxy with total dry film thickness 12 mils minimum.

5. Actuators: Lever operated 4-inch and smaller; worm geared handwheel operated 6-inch and larger. Valves shall provide driptight shutoff in both directions.

6. Manufacturers: DeZurik PEC; Milliken Eccentric; Clow EPV; or equal.

7. Installation: Unless otherwise necessary for proper installation or permitted by Engineer, all eccentric plug valves shall be installed with shaft horizontal and with plug in upper half of body. Valves in sewage lines shall be installed with seat on upstream end.

2.05 SYSTEM C – CHEMICALS, SAMPLE WATER

A. Ball Valves

1. Rating: 150 psi at 75°F.

2. Type: Double union. For sodium hypochlorite service, provide vented ball valve with permanent vent/flow directional marking.

3. Connections: Socket.

4. Materials: PVC body, teflon seats and EPDM O-ring seals, except Viton O-ring seals with solidum hypochlorite solution.

5. Manufacturers: Asahi/America, or equal.

B. Check Valves

1. Rating: 150 psi at 75°F.

2. Type: Ball for horizontal or vertical service.

3. Connections: Union ends for socket weld.

4. Materials: PVC body, Viton O-ring seals and seats except provide EPDM for caustic service.

5. Manufacturers: Chemtrol True Union BC, Plastiline No. 8611, or equal.

C. Foot Valves

1. Provide foot valve that consists of a check valve and strainer on chemical suction lines within solution tanks. The foot valve shall prevent loss of prime and filter out particulates from the chemical. Provide a ceramic weight to keep foot valve assembly at the bottom of the tank.

2. Materials: PVDF body; Viton seals.

3. Manufacturers: Blue-White Industries; or equal.

D. Rotameters

1. The metering scale shall be a nominal 250 mm in length with GPM graduations.

2. Meters shall have a minimum rangeability of 10:1. Accuracy shall be ±2% of full scale for flow rates in the upper 90% of the maximum flow range specified.

3. The tube shall be readily field removable for cleaning.

4. Materials: Provide Type 316 stainless steel housing or frame and a calibrated borosilicate glass metering tube with float. The float shall be of a material and shape suitable for the process fluid. All other wetted parts shall be Type 316 stainless steel, except O-rings shall be Teflon unless otherwise recommended by the manufacturer for the process fluid specified.

5. Connections: End fittings shall be chosen to suit the process fluid and the installation requirements in the field.

6. Manufacture: Brooks Instrument; SK Instrument; Wallace & Tiernan; Fischer & Porter; or equal.

E. Refer to Section 11380 for strainers, pulsation dampeners, pressure relief valves, back pressure valves, calibration cylinders, and chemical injection assemblies.

2.06 APPURTENANCES

A. Pressure Gauge:

1. 4-1/2-inch size, range as specified, stainless steel case, liquid filled, safety glass, weather proof, bronze tube and brass socket, industrial grade stainless steel movement with brass hairspring, 1.5% accuracy, and 1/2-inch NPT lower connection.

2. Supply with 1/2-inch brass gauge cock.

3. For pressure gauges on chemical systems, provide a diaphragm seal.

4. The diaphragm seal and isolation valve materials shall be chemically compatible with the solution of exposure.

PART 3 - EXECUTION

3.01 INSTALLATION

A. Valves shall be installed in accordance with the manufacturer's recommendations.

B. Install butterfly valves in accordance with AWWA C504, Appendix A, Sections A.2 through A.5, inclusive.

C. Valves installed in vertical runs of pipe shall have their operating stems oriented to facilitate the most practicable operation, as approved by the Engineer.

D. Install valves and accessories such that all parts are easily accessible for maintenance and operation. Provide valve boxes for buried valves.

E. Where valve handwheels are shown on the Drawings, valve orientation shall be as shown. Where valve handwheels are not shown, orient valves to permit easy access to the handwheels or handles and to avoid interferences.

F. Provide a union adjacent to each screwed end valve and accessory with additional unions as necessary to facilitate removal.

G. Where valves or other pipeline items require metal full-face connecting flanges, provide intermediate flanges if the connecting flange is not adequate.

H. Connections between ferrous and non-ferrous valves, accessories, or pipe supports shall be made using a dielectric coupling, union, or flange. See Section 15050.

3.02 VALVE IDENTIFICATION

A. Identify all buried and exposed valves with tags. See Section 15076.

3.03 TESTING

A. Valves shall be tested at the same time that the adjacent pipeline is tested. Joints shall show no visible leakage under test. Joints that show signs of leakage shall be repaired prior to final acceptance.

B. If there are any special parts of control systems or operators that might be damaged by the pipeline test, they shall be properly protected.

C. The Contractor shall be responsible for repairing or replacing any items damaged by the testing at no additional cost to the City.

END OF SECTION

SECTION 15400
BUILDING AND PLUMBING FIXTURES

PART 1 - GENERAL

1.01 SECTION INCLUDES

A. Furnish, install, and test all building service piping and plumbing fixtures.

1.02 REFERENCED SECTIONS

A. The following Sections are referenced in this Section

1. Section 01330 – Submittals
2. Section 01611 – Seismic Design Requirements
3. Section 02300 – Earthwork
4. Section 10200 – Safety and Signage
5. Section 11500 – Disinfection
6. Section 12350 – Laboratory Casework
7. Section 15050 – Piping Systems
8. Section 15076 – Piping and Valve Identification
9. Section 15110 – Valves and Accessories
10. Section 15951 – Testing Gravity Flow Pipelines
11. Section 15996 – Testing Pressure Piping

1.03 REFERENCES

A. ANSI – American National Standard Specifications

B. FCCCHR – Foundation for Cross-Connection Control and Hydraulic Research

1.04 SUBMITTALS

A. Comply with Section 01330.

B. Submit the following items:

1. Building piping layout drawings and details.
2. Manufacturer's catalog information and description for items proposed for use.
3. Manufacturer's installation, operation, and maintenance manuals/bulletins and spare parts list where applicable.

1.05 QUALITY ASSURANCE

A. Codes:

1. Comply with the latest edition of the California Plumbing, and rules and regulations of authorities having jurisdiction over the work specified herein.
2. Fixtures: Provide and install in accordance with the California Plumbing Code, latest edition.

B. Permits and inspections shall be in accordance with General Conditions.

C. The Drawings shall be taken in a sense as diagrammatic. Size of pipes and general method of running them are shown, but it is not intended to show every offset and fitting nor every structural difficulty that may be encountered.

1.06 SEISMIC PROTECTION

A. Provide equipment and piping with seismic protection as specified and as recommended by "Guidelines for Seismic Restraints of Mechanical Systems and Plumbing Piping System," latest edition by SMACNA. Seismic restraints shall be designed in accordance with the seismic design requirements in Section 01611.

PART 2 - PRODUCTS

2.01 PLUMBING FIXTURES AND ACCESSORIES

A. Lab Sink and Accessories: See Section 12350.

B. Emergency Eyewash and Shower Combination Unit

1. Comply with ANSI Z358.1.

2. Unit shall be designed for corrosive duty and provide a means of controlled flow to both eyes.

3. Unit shall be constructed of Schedule 40 galvanized steel and identified with a highly visible sign.

4. Eyewash

a. The eyewash shall be 36-42 inches from the floor.

b. The eyewash shall deliver a minimum of 0.4 gpm for 15 minutes.

5. Shower

a. The shower head shall be 82-92 inches above the floor surface.

b. Shower head shall deliver a minimum of 20 gpm and provide a column of water 20-inches wide at 60 inches above the floor.

6. Unit components shall be capable of operating simultaneously and shall be positioned so that components may be used simultaneously by the same user.

7. Valve shall be designed so that the flow remains on without the use of the operator's hands. The valve shall be simple to use and go from on to off in one second or less.

8. Outlets shall be protected from airborne contaminates. Provide dust cover.

9. Manufacturer: Haws 8300/8309; Guardian Equipment 1902 BC; or equal.

2.02 PIPING, FITTINGS, VALVES, AND ACCESSORIES

A. Water System (PW)

1. Pipe and Fittings: See Section 15050.

2. Water Hammer Arrestors: Zurn Z-1700, Wade "Shokstop" W-10; or equal.

3. Backflow Preventers

   a. All backflow preventers shall be approved by the FCCCHR.

   b. Type: Straight configuration with shutoff valve and test cock, unless shown otherwise on the Drawings.

   c. Pressure Rating: 175 psi.

   d. Temperature Rating: 32°F to 140°F.

   e. Connections: Threaded for 2½-inch and smaller. Flanged for 3-inch and larger.

   f. Products:

      1) Reduced Pressure Backflow Preventers (Process/ Irrigatior Connections 2-1/2 inch and smaller) (RPBP): Watts Series 909; Febco 825Y, or equal.

      2) Reduced Pressure Backflow Preventers (Process Connections 3 inch and larger) (RPBP): Watts Series 909; Febco 825YD, or equal.

      3) Dual-Check with Atmosphere Vent (Hot Water Heating Systems): Watts Series 9DM2; Wilkins Model 760.

      4) Double Check Backflow Preventer w/ Detector Check (Firelines): Watts Series 709DCDA; Febco 806YD, or equal.

4. Hose Valve

   a. Type: Class 125 angle valve equipped with hose nipple.

   b. Materials: Bronze body, seat, and disc.

   c. Size: 1-inch, unless indicated otherwise on Drawings.

   d. Connection: Double male ends, NPT by straight hose thread.

   e. Manufacturer: Crane; American Standard; or equal.

   f. Accessories

      1) Fittings: Provide bronze reducer for connection to 3/4-inch hose.

      2) Hose: Provide three 75-foot lengths of 3/4-inch hose. Hose shall be seamless EPDM rubber reinforced with textile cord to provide kink resistance, designed for a working pressure of at least 200 psi. Provide hose with threaded brass fittings.

      3) Hose Rack: See Hose Rack Details on Drawings.

      4) Warning Sign: Attach a warning sign “NON-POTABLE WATER. DO NOT DRINK” at each hose bibb. See Section 10200.

5. Wharf Hydrant

   a. Type: Angle valve with handwheel.

   b. Rated Pressure: 300 psi.

   c. Connection: 1.5-inch male outlet with standard hose threads by1.5-inch IPT female inlet.

   d. Materials: Brass.

   e. Manufacturers: Potter-Roemer 4060; or equal.

f. Accessories:

1) Provide cap with corrosion resistant chain.

2) Provide spanner fir 1.5-inch pin lug coupling.

3) Provide 1.5-inch hose in 50-foot length with brass pin lug expansion ring couplings having standard hose threads.

6. Mop Sink

a. Sink: 24-inch x 24-inch x 12-inch Terrazo sink with back flange. Drain body shall be brass with non-caulked outlet, cast integral to the sink body. Florestone Model 20; or equal.

b. Hose Valve: Provide a wall mounted hose valve above sink.

c. Strainer: Chrome-plated strainer. American Standard 7721.038; Kohler K9146; or equal.

B. Sanitary Drain, Waste, and Vent Piping (D, SS)

1. Pipe and Fittings: See Section 15050.

2. Floor Drains and Traps: Cast iron drains having inside caulk or push-on compression type neoprene gasket joints.

a. FD-1 (For Finished Floors): Zurn Z-415-6B; Wade W-1104-AX6; or equal, complete with primer connection.

b. FD-3 (Funnel Drain): Zurn Z-328, or equal. Funnel drain shall be formed by stubbing bell end of spigot drainage pipe ½-inch above floor level.

c. FD-4 (Floor/Funnel Drain) Zurn Z-415-E, Wade W-1100-EF4; or equal.

d. FD-6 (Floor Drain): Zurn Z520, Wade W-1340; or equal.

e. Traps: Provide traps for all floor drain unless noted otherwise. Trap assembly shall include primer and vent connections as required. Zurn Z-1000, Wade, or equal.

3. Floor Cleanouts: Zurn Z-1400; Wade W-6000; or equal. Provide scoriated top.

4. Wall Cleanouts: Zurn Z-1441; Wade W-8450-R; or equal.

5. Cleanout Caps

a. Cleanout caps shall be elastomeric plastic, resistant to sewage and grease, chemicals, and normal sewer gases.

b. Caps shall be designed to slip over cleanout/cleanout extension with a snug fit.

c. Cap shall be held in place with a stainless steel band clamp.

d. Caps shall meet requirements of the Uniform Plumbing Code.

e. Manufacturers: Fernco; Indiana Seal; or equal.

6. Cleanout Box

a. Provide precast, reinforced concrete cleanout boxes at cleanout installations.

b. Manufacturers: Christy V1BOX w/F8D lid; Brooks; or equal.

PART 3 - EXECUTION

3.01 INSTALLATION

A. Install escutcheons secured to pipe with set-screw where pipes or tubing pass through exposed walls or ceilings.

B. Provide all fixtures with traps and vents unless otherwise indicated on the Drawings.

C. Vent flashing at roof, unless otherwise shown on the Architectural Drawings, shall be a 4 lb lead sheet extending from a 4-inch (minimum) skirt at roof line, up to the open end of vent. At the open end of vent, the lead sheet shall be turned down into the vent opening.

D. Unless indicated otherwise, all soil, waste and drain piping shall be sloped not less than 1/4-inch per foot downward in the direction of flow.

E. Provide unions or flanges where equipment is installed in piping. Also provide dielectric unions or couplings at points of connection of ferrous to non-ferrous metal piping.

F. Provide a shutoff stop valve in the branch of every water, or air pipe service upstream of every fixture or outlet.

G. Furnish and install all supports, bracing, and blocking required for the proper installation of the plumbing work specified herein.

H. Install water hammer arrestors to protect each plumbing fixture or battery of fixtures.

I. Place or erect all piping to accurate line and grade and backfill, support, hang, or brace against movement as specified or shown on the Drawings, or as required for proper installation. Remove all dirt and foreign matter from the pipe interior prior to installation and thoroughly clean all joints before joining.

J. Use reducing fittings where any change in pipe size occurs. Do not use bushings unless specifically noted on the Drawings. Use eccentric reducing fittings wherever necessary to provide free drainage of lines.

K. Provide valves wherever equipment drain connections are furnished and carry the discharge pipe to the nearest floor drain, drain trench or sump. Where no receptacle for drain exists, install drain piping to two pipe diameters or 2-inch, minimum above the drain rim. Drain piping and valve materials shall conform to the requirements of the system served.

3.02 CLEANING

A. Prior to testing, thoroughly clean the inside of each completed piping system of all dirt, loose scale, sand and other foreign material.

B. Cleaning shall be by sweeping, flushing with water or blowing with compressed air or oil-free nitrogen gas, as appropriate for the size and type of pipe. Flushing shall achieve a velocity of at least 3 feet per second.

C. The Contractor shall install temporary strainers, temporarily disconnect equipment, or take other appropriate measures to protect equipment while cleaning piping.

3.03 TESTING

A. Test systems and arrange for inspection by the proper authorities.

B. Water Piping: See Section 15996.

C. Waste, Drain, and Vent Piping

1. See Section 15951.

2. Test waste, drain, and vent piping in accordance with the latest edition of the California Plumbing Code with local amendments.

3. Storm drain (rainwater) piping shall be tested similar to waste, drain, and vent piping.

3.04 DISINFECTION OF WATER SYSTEM PIPING

A. Clean and disinfect water system piping. See Section 11500.

3.05 PIPE AND VALVE IDENTIFICATION

A. See Section 15076.

END OF SECTION

WSECTION 15736

SELF-CONTAINED AIR-CONDITIONING UNITS

PART 1 - GENERAL

1.01 SECTION INCLUDES

A. Packaged wall-mounted air-conditioning units with refrigerant compressors, air-cooled condensers, and controls.

1.02 REFERENCED SECTIONS

A. The following Sections are referenced in this Section

1. Section 01330 – Submittals
2. Section 01782 – Operation and Maintenance Information
3. Section 01999 – Reference Forms

1.03 SUBMITTALS

A. Comply with Section 01330.

B. Product Data: Include rated capacities, furnished specialties, and accessories for each unit indicated.

C. Wiring Diagrams: Power, signal, and control wiring.

D. Operation and maintenance data. Comply with Section 01782.

E. Completed Manufacturer's Installation Certification Form for each piece of equipment (Section 01999).

1.04 QUALITY ASSURANCE

A. Electrical Components, Devices, and Accessories: Listed and labeled as defined in NFPA 70, Article 100, by a testing agency acceptable to authorities having jurisdiction, and marked for intended use.

1.05 WARRANTY

A. Special Warranty: Manufacturer's standard form in which manufacturer agrees to repair or replace self-contained air-conditioning units that fail in materials and workmanship within five years from date of Substantial Completion.

PART 2 - PRODUCTS

2.01 MANUFACTURERS AND MODELS

A. Available Manufacturers: Subject to compliance with requirements, manufacturers offering products that may be incorporated into the Work include, but are not limited to, the following:

1. Frigidaire, Carrier, Mitsubishi, or Daikin.

B. Acceptable Models: Subject to compliance with requirements, provide one of the following products:

1. Frigidaire Model FFWW184WE2.

2. Equivalent product by Carrier, Mitsubishi, or Daikin.

2.02 PACKAGED UNITS

A. Description: Self-contained, factory-assembled and -wired unit; consisting of cabinet, compressor, fan, evaporator coil, air filters, and controls; and fully charged with refrigerant and oil; with integral air cooled condenser.

B. Disconnect Switch: Factory mounted on equipment.

C. Cabinet Frame and Panels: Structural-steel frame with galvanized steel panels with baked-enamel finish in color selected by City, and with access doors or panels.

1. Insulation: Minimum 1/2-inch- (13-mm) thick, acoustic duct liner on cabinet interior and control panel.

2. Discharge Plenum: Cabinet extension with directional louvers.

3. Corrosion-Resistant Treatment: Phenolic coating on unit interior and exterior.

D. Evaporator Fan: Galvanized steel, double-width, double-inlet, forward-curved centrifugal fan; statically and dynamically balanced.

1. Drive: Direct, with fan and motor resiliently mounted.

2. Fan Sheaves: Cast-iron or steel sheaves, dynamically balanced, bored to fit shafts and keyed.

3. Motor Sheave: Variable and adjustable pitch selected so required rpm are obtained when set at midposition.

4. Motors: Multispeed.

E. Compressor: Hermetically sealed, 3600 rpm maximum, and resiliently mounted with positive lubrication and internal motor protection.

F. Evaporator Coil: Direct-expansion coil with seamless copper tubes expanded into aluminum fins. Provide separate circuit for each compressor, with externally equalized thermal-expansion valve, filter-dryer, and charging valves.

G. Air Cooled Condenser.

H. Permanent Filters: 1-inch- (25-mm) thick, cleanable panel filters.

I. Control Package: Factory wired, including contactor, high- and low-pressure cutouts, internal-winding thermostat for compressor, control-circuit transformer, and noncycling reset relay.

1. Time-Delay Relay: Five-minute delay to prevent compressor cycling.

2. Adjustable Thermostat: Unit mounted to control the following:

a. Supply fan.

b. Compressor.

3. System Selector Switch: Off- auto-cool

4. Fan Control Switch: Auto-on.

J. Ventilation Options:

1. Barometric Outside-Air Damper: Adjustable-blade damper allowing induction of up to 15 percent outside air when evaporator fan is running.

PART 3 - EXECUTION

3.01 INSTALLATION

A. Anchor units to structure.

B. Isolation: Mount cabinet on rubber-in-shear pads all around for mounting inside the opening.

3.02 FIELD QUALITY CONTROL

A. Installation Inspection: Engage a factory-authorized service representative to inspect field-assembled components and equipment installation.

B. Operational Test: After electrical circuitry has been energized, start units to confirm proper motor rotation and unit operation. Remove malfunctioning units, replace with new components, and retest at no additional cost to the City.

C. Test and adjust controls and safeties. Replace damaged and malfunctioning controls and equipment at no additional cost to the City.

END OF SECTION

(THIS PAGE LEFT BLANK INTENTIONALLY)

SECTION 15805
VENTILATION EQUIPMENT

PART 1 - GENERAL

1.01 SECTION INCLUDES

A. Work necessary to furnish and install ventilation equipment as shown on the drawings and as specified herein

1.02 REFERENCED SECTIONS

A. The following Sections are referenced in this Section:

1. Section 01330 – Submittals
2. Section 01999 – Reference Forms

1.03 SUBMITTALS

A. Submittals shall demonstrate full compliance with all aspects of this specification. Submit manufacturer's technical data and application instructions in accordance with Section 01330.

B. Submit completed Manufacturer’s Installation Certification Form for each piece of equipment (Section 01999).

1.04 CODES, ORDINANCES, AND PERMITS

A. All work shall be installed in accordance with the laws, ordinances, rules, and regulations of all local and State authorities having jurisdiction, and the rules and regulations of the National Board of Fire Underwriters, whether shown on the drawings or not. Electrical components shall be UL listed and labeled.

PART 2 - PRODUCTS

2.01 WALL MOUNTED EXHAUST FAN

A. Wall mounted exhaust fan shall be 115 V, single phase, direct motor driven, unless otherwise shown, and shall be supported on metal frames for mounting, with safety guards.

B. Wall openings shall be of sufficient size for the fan capacity.

C. Exhaust fans shall be Greenheck Model CUE-099-VG/A wall-mounted direct drive exhaust fan or equal and shall deliver not less than 1,200 cfm at 0.05 inches static pressure (W.G.).

D. All Exhaust fans shall be complete with all necessary appurtenances for installation in a masonry wall.

2.02 ELECTRICAL AND CONTROLS

A. Wall mounted exhaust fan shall be controlled as shown on the contract drawings.

PART 3 - EXECUTION

3.01 GENERAL

A. Install ventilation equipment in accordance with equipment manufacturer's installation instructions, and with recognized industry practices, to ensure the equipment complies with requirements and serves the intended purpose.

END OF SECTION

SECTION 15951
TESTING GRAVITY FLOW PIPELINES

PART 1 - GENERAL

1.01 SECTION INCLUDES

A. Acceptance testing of sanitary sewer and storm drain pipelines:

1. Visual inspection of pipes.
2. Leakage testing of pipes.
3. Leakage testing of manholes.

1.02 REFERENCED SECTIONS

A. The following Section is referenced in this Section

1. Section 01330 – Submittals
2. Section 01560 – Environmental Controls
3. Section 01999 – Reference Forms

1.03 SUBMITTALS

A. Comply with Section 01330.

B. Testing Plan and Schedule: Submit a written plan that identifies the testing methods and schedule. The testing plan shall include description of testing procedures, equipment, and method for water procurement, conveyance, and disposal.

C. Notification of Testing: Submit advance written notice of testing activities a minimum of 48 hours prior to conducting piping tests.

D. Submit test reports for each test on each segment of pipeline.

E. Completed Pipe Test Record Forms, found in Section 01999.

1.04 TESTING REQUIREMENTS

A. Provide labor, equipment, tools, test plugs, risers, air compressor, air hose, pressure gauges and other devices necessary for proper inspection and testing of pipelines.

B. Perform leakage testing to verify compliance with the maximum allowable leakage criteria specified in this Section. Refer to tables in this Section for leakage criteria.

C. Coordinate testing schedules with Engineer. Perform testing under observation of Engineer.

D. Test pressures shall account for ground water elevation.

E. Perform testing after placing and compacting Bedding Material around the pipe, or after backfilling the pipe trench, at Contractor's option. Schedule testing so that no more than 1,000 lineal feet of installed gravity flow piping remains untested at any one time.

F. Repair or replace sections of pipelines and manholes that fail to meet the specified requirements and retest until the leakage criteria is satisfied at no additional cost to the City.

PART 2 - PRODUCTS (NOT USED)

PART 3 - EXECUTION

3.01 VISUAL INSPECTION OF PIPES

A. Confirm pipe alignment visually by flashing a light between manholes. Verify if alignment is true and no pipes are misplaced. In case of misalignment or damaged pipe, remove and re-lay or replace pipe segment.

3.02 LEAKAGE TESTING OF PIPES

A. Compensating for Ground Water Pressure:

1. When Contractor elects to test pipe after backfilling the pipe trench, groundwater pressure must be taken into account to eliminate its influence on the leakage test.

2. Determine groundwater elevation as follows:

a. Install a 1/2-inch diameter pipe nipple, approximately 10” long, through the wall of each manhole. Cap the end of the pipe nipple that protrudes into the manhole. Locate pipe nipple at the crown of the new gravity pipeline where the pipeline enters the manhole. Install pipe nipple at the same time the gravity pipeline is constructed.

b. Before performing pipeline leakage acceptance test, remove the cap from the pipe nipple and clear the pipe nipple with air pressure. Connect a clear plastic tube to the nipple, run the tube vertically inside the manhole and allow groundwater to rise in the tube.

c. After groundwater stops rising, measure the height in feet of water over invert of the pipe.

B. Test Options: Gravity flow pipelines may be tested by either hydrostatic means or by low pressure air testing.

1. Hydrostatic Leakage Test

a. Determine groundwater elevation.

b. Plug wyes, tees, stubouts, laterals and other connections to the sewer. Plug sewer pipeline in the downstream manhole. If necessary, to isolate flow, plug incoming pipes in the upstream manhole.

c. When test pressures require installation of a riser pipe, connect riser pipe to pipe in the upstream manhole.

d. Fill sewer pipe and manholes with water to the specified test elevation, compensating for the measured groundwater elevation.

e. Conduct leakage test for a duration of 2 hours. After 2 hours, take water level reading to determine drop of water level and calculate water loss or measure the quantity of water required to restore water to the specified elevation. Total loss of water shall not exceed that calculated from allowable leakage criteria.

f. Allowable Leakage Criteria: Maximum allowable leakage equivalent to 200 gallons per day per inch of inside diameter per mile of pipeline under test.

2. Low Pressure Air Testing

a. Conduct air pressure testing in accordance with ASTM C924.

b. Pressurize the pipe section to be tested to 4.0 pounds per square inch and hold this pressure for 5 minutes. After this time period, allow pressure to drop.

c. When internal air pressure reaches 3.5 pounds per square inch, begin measuring rate of air pressure loss. Record the time interval required for the internal air pressure to drop from 3.5 psi to 2.5 psi.

d. Acceptance Criteria: The pipeline under test is acceptable when the time interval so recorded exceeds the minimum test time given by the following table:

MINIMUM Time Allowed for Pressure Loss from 3.5 psig to 2.5 psig:	
Nominal Pipe Diameter, Inches	Minimum Time Allowed per 100 Lineal Feet of Pipe Under Test, Minutes
6	0.7
8	1.2
10	1.5
12	1.8
15	2.1
18	2.4
21	3.0
24	3.8

e. Any section of pipe which fails to meet requirements shall be repaired and retested.

3.03 LEAKAGE TESTING OF MANHOLES

A. After completion of manhole construction, wall sealing, or rehabilitation, test manholes for water tightness using hydrostatic or vacuum testing procedures. Conduct test prior to backfilling.

B. Plug influent and effluent lines connected to manhole with suitably-sized pneumatic or mechanical plugs.

1. Utilize plugs that are properly rated for pressures required for test.

2. Place plugs a minimum of 6 inches outside of manhole walls.

3. When pipes connected to the manhole have not been backfilled, brace pipes to prevent dislodging from the manhole.

C. Vacuum Testing:

1. Install vacuum tester head assembly at top access point of manhole and adjust for proper seal on straight top section of manhole structure. Following

manufacturer's instructions and safety precautions, inflate sealing element to the recommended maximum inflation pressure; do not over-inflate.

2. Evacuate manhole with vacuum pump to 10" mercury (Hg), disconnect pump, and monitor vacuum for the time period specified in the following table.

Depth in Feet	Time in Seconds by Manhole Diameter		
	48-inch	60-inch	72-inch
4	10	13	16
8	20	36	32
12	30	39	48
16	40	52	64
20	50	65	80
24	60	78	96
[a]	5	6.5	8.0

[a] Add times for each additional 2-feet of manhole depth. (The values listed above have been extrapolated from ASTM C924-85).

3. If the drop in vacuum exceeds 1" Hg over the specified time period tabulated above, locate leaks, complete repairs necessary to seal manhole and repeat test procedure until satisfactory results are obtained.

D. Hydrostatic testing:

1. Fill manhole with water to top of frame. Add water over a 24-hour period to compensate for absorption and evaporation losses. After 24 hours, refill to top of frame and observe for loss of water. If, after a 4-hour period the water level is reduced by more than 1/4", the leakage shall be considered excessive. Contractor shall make necessary repairs and retest the manhole at no additional cost to the City.

2. If water loss exceeds amount tabulated above, locate leaks, complete repairs necessary to seal manhole and repeat test until satisfactory results are obtained at no additional cost to the City.

3.04 WATER DISPOSAL

A. Dispose of water use for testing in accordance with the requirements in Section 01560.

END OF SECTION

SECTION 15996

TESTING PRESSURE PIPING

PART 1 - GENERAL

1.01 SECTION INCLUDES

A. Hydrostatic testing of pressure pipelines.

1.02 REFERENCED SECTIONS

A. The following Sections are referenced in this Section:

1. Section 01330 – Submittals
2. Section 01500 – Construction Facilities and Utilities
3. Section 01560 – Environmental Controls
4. Section 01999 – Reference Forms

1.03 SUBMITTALS

A. Comply with Section 01330.

B. Testing Plan and Schedule: Submit a written plan that identifies the testing methods and schedule. The testing plan shall include description of method for water procurement, conveyance, and disposal.

C. Notification of Testing: Submit advance written notice of testing activities a minimum of 48 hours prior to conducting piping tests.

D. Submit test reports for each test on each segment of pipeline.

E. Completed Pipe Test Record Forms, found in Section 01999.

1.04 TESTING REQUIREMENTS

A. Furnish personnel, materials, bulkheads, test plugs, restraints, anchors, temporary connections, pumps, pressure gauges and other equipment needed to perform testing.

B. Water for Testing

1. Use potable water for pressure testing pipelines. Obtain water from the source identified in Section 01500.
2. Disposal: Dispose of water used for testing pipelines in accordance with the requirements in Section 01560.

C. Test only those portions of the pipe that have been installed as part of this Contract.

1. Test new pipe sections prior to making final connection to existing piping.
2. Install test plugs or bulkheads to isolate new piping systems.
3. Unless otherwise indicated, valves may not be used to isolate portions of the piping system for purposes of testing. When testing against a valve is indicated or approved by the City, provide a test plate “pancake” to further isolate the new and existing piping.

D. Sequence

1. Buried Pressure Piping: Except as otherwise indicated, conduct piping pressure test after trench has been backfilled to subgrade and compacted. Piping may be tested before or after final paving, at Contractor's option.

2. Encased Piping: Test before encasing pipe in concrete.

E. Failed Tests: Make necessary corrections or remove defective pipe or defective appurtenances. Repeat pressure test until a successful test is achieved.

PART 2 - PRODUCTS (NOT USED)

PART 3 - EXECUTION

3.01 GENERAL

A. Test pipelines, appurtenances, valves, and fittings in the pipeline system.

B. Where allowable leakage rates are not specifically indicated, no leakage is allowed.

C. Perform testing operations at the time agreed upon with and in the presence of the Engineer.

D. Prior to pressure testing, clean pipeline of debris, construction materials, dirt and other foreign material within the piping system.

E. Do not test pipelines until thrust restraint devices have been installed.

1. Where concrete thrust blocks are used, do not begin pressure test until concrete has attained an age of at least 7 days unless otherwise approved by the City.

2. All supports, anchors, and blocks on exposed pipe shall be installed prior to the leakage test. No temporary supports or blocking shall be installed for the final test.

F. Measure test pressure at the highest point on the pipeline, except that the pressure at the lowest point shall not exceed the pipe manufacturer's rated test pressure, unless specifically noted otherwise.

G. After testing has been completed, drain test water from pipelines and leave in clean condition. If a gas pipeline is tested with water, the water shall be drained and blown dry with oil-free air or nitrogen gas.

3.02 TESTING WITH WATER

A. Place temporary bulkheads in the pipe at the ends of the test section, and then slowly fill the pipeline with water at a rate which does not cause surges or exceed the rate at which the air can be released through the air valves.

B. Ascertain that test bulkheads are suitably restrained to resist the thrust of the test pressure without damage to, or movement of, the adjacent pipe.

C. Purge air within the pipeline during the filling operation. Check proper operation of air release valves and air vents during the filling operation to ascertain proper operation and venting of air from the pipeline.

D. Concrete pipe, cement-mortar lined pipe and other pipe made from water absorbing material:

1. After the filling operation is complete, allow the filled pipeline to stand under a slight pressure for at least 24 hours to allow air to escape from any air pockets within the pipeline and the pipe lining to absorb water.

2. Examine bulkheads, valves and connections for leaks during this period. If leaks are found, make corrections before conducting the pressure test.

3.03 TESTING WITH AIR

A. Pipe testing with air or another gas shall show no reduction of pressure during the test period after corrections have been made for changes in temperature in conformance with the following relationship:

$$\frac{P_1}{T_1} = \frac{P_2}{T_2}$$

Where,

P_1 and P_2 are the absolute pressures of the gas in the pipe.

T_1 and T_2 are the absolute temperatures of the gas in the pipe.

Subscript "1" denotes starting condition and subscript "2" denotes final conditions.

B. Take special precautions to protect personnel when using air or gas as the test medium. During initial pressurization of a pipeline to the specified test pressure, personnel shall be protected by suitable barricades or shall move to locations that can provide suitable protection, such as behind a nearby concrete structure.

3.04 PRESSURE TESTING EXPOSED PIPING

A. Test exposed piping as follows:

1. Fill section of piping under test with water and raise the system pressure to the test pressure specified in Paragraph 3.06.

2. Visually inspect exposed pipe joints, joints at fittings, valves, hydrants, and other piping appurtenances for leaks.

3. Correct leakage as necessary to eliminate the leakage.

4. Duration of Pressure Test: As specified in Paragraph 3.06 for the pipe type.

5. Leakage Allowances: As specified in Paragraph 3.06 for the pipe type.

6. Correct any visible leakage by tightening flanges and screwed joints, replacing gaskets or removing defective materials.

7. Repeat test until no leakage is observed.

8. Record results of pressure test on Pipe Test Record form included in Section 01999.

3.05 PRESSURE TESTING BURIED PIPING

A. Pressure test buried piping as follows:

1. Fill section of piping under test with water and raise the system pressure to the test pressure specified in Paragraph 3.06.

2. Visually inspect exposed pipe joints, joints at fittings, valves, hydrants, and other piping appurtenances for leaks.

3. Correct visible leaks necessary to eliminate the leakage.

4. Duration of Pressure Test: As specified in Paragraph 3.06 for the pipe type.

5. Leakage Allowances: As specified in Paragraph 3.06 for the pipe type.

6. Leakage Measurement:

a. Begin test once visible leaks have been eliminated.

b. Maintain test pressure during the test period by adding makeup water to a calibrated test reservoir.

c. Accurately measure the volume of makeup water introduced into the pipeline to maintain the test pressure to determine the leakage rate for the test.

7. Repeat test until leakage is below the allowable leakage. The pipeline pressure test is successful when the makeup water added during the test is equal to or less than the allowable leakage rate (L) defined below.

8. Record results of pressure test on Pipe Test Record form included in Section 01999.

3.06 TESTING SPECIFICS

A. Copper Pipe (CUP)

1. Duration: Four hours.

2. Pressure: 150 psi.

3. Medium: Air.

4. Allowable Leakage: None.

B. Copper Tube (CUT)

1. Duration: Four hours.

2. Pressure: 150 psi.

3. Medium: Air.

4. Allowable Leakage: None.

C. Ductile Iron Pipe – Bell & Spigot (DIP-B)

1. Duration: Four hours.

2. Pressure: 150 psi.

3. Medium: Water.

4. Allowable Leakage:

$$L = \frac{SD(P)^{1/2}}{148{,}000}$$

L = Allowable leakage, in gallons per hour.
S = Length of the test section, in feet.
D = Nominal diameter of the piping, in inches.
P = Test pressure, in pounds per square inch gauge.

D. Ductile Iron Pipe – Flanged (DIP-F)

1. Duration: Four hours.
2. Pressure: 150 psi.
3. Medium: Water.
4. Allowable Leakage: None.

E. Polyvinyl Chloride – Pressure (PVC-P)

1. Duration: Four hours.
2. Pressure: As indicated in the following schedule:

Service	Test Datum	Test Pressure
Ammonia Sulfate	41.5	150 psi
Ferric Chloride	41.5	150 psi
Sodium Hypochlorite	41.5	150 psi
Sample	41.5	150 psi
Sample Drain	41.5	25 psi
Process Drain	41.5	25 psi

3. Medium: Water.
4. Allowable Leakage: None.

END OF SECTION

(THIS PAGE LEFT BLANK INTENTIONALLY)

SECTION 16010

ELECTRICAL

PART 1 - GENERAL

1.01 SCOPE OF WORK

A. The Contractor shall install, ready for use, the electrical system as specified herein and shown on the Contract drawings. This document describes the function and operation of the system and particular components, but does not necessarily describe all necessary devices. All components and devices shall be furnished and installed as necessary to provide a complete operable and reliable system for accomplishing the functions and meeting the performance set forth hereinafter.

B. Furnish all required labor, materials, project equipment, tools, construction equipment, safety equipment, transportation, test equipment, incidentals and services to provide a complete and operational electrical system, as shown on the Contract "E"-series Drawings, included in these Specifications, or necessary for fully operating facility.

C. Examine the specifications and Drawings for mechanical equipment and provide all starters, circuit breakers, switches, pushbuttons and appurtenances which are not specified to be with the mechanical equipment. Erect all electrical equipment not definitely stated to be erected by others, furnish and install conduit, wire and cable and make connections required to place all equipment in complete operation. Use Device Indexes and Contract Drawings typical installation details for mounting detail requirements to be provided for equipment listed.

D. The major areas in the scope of work shown on E-series Contract drawings which includes both the furnishing and installation are:

1. Metering/Main Switchboard, Motor Control Center, VFD motor starters and Automatic Transfer Switch.

2. Generator Termination Panel.

3. Radio system and communications commissioning.

4. Building security, gate access and video monitoring equipment will be provided and installed by others. Coordinate with subcontractor as necessary.

5. RTU Control Panel

a. RTU Control Panel enclosure, shelf, fans, thermostat controls, lights and other miscellaneous devices to be provided by System Supplier.

b. RTU backpan, including RTU system hardware, components and programming for controlling the pumps, etc. and other miscellaneous backpan devices shall be by Others. Programming of RTU system, and Operator Interface shall be by Others.

6. Existing SCADA graphic screen configuration and modifications to existing central system and PLC/OI configuration shall be by Others.

7. Instruments and devices supplied under Section 16940 Instrumentation.

8. Conduits, grounding system and the field interconnection wiring between the instruments, field devices, electrical enclosures, etc. as shown on plans.

9. All necessary miscellaneous shut off, sample and calibration valves to sensors.

10. Trenching, backfilling, compaction and resurfacing for all underground conduit routes, concrete pads and pull boxes.

11. Provide all necessary hardware, fittings, and devices to connect the designated equipment and wiring.

12. Site electrical devices, lights and receptacles.

13. Installation, mounting supports, interconnection drawings, wiring, start-up, testing and warranty for all equipment and systems.

E. No items for panels or MCCs shall be shipped loose for later field installation in MCC, control panel, enclosures, etc. without prior written approval of the City. Incomplete panels or MCC arriving at the jobsite shall be returned by the Contractor to the shop to complete fabrication at no additional cost to the City when directed by the City

F. The following specifications incorporate specific equipment and devices that are preferred by the City because of their serviceability, because of the local availability of labor, parts and materials, or because of the ability of the City to umbrella the equipment under existing maintenance contracts; however, favorable alternatives proposed in writing during the submittal process will be reviewed by the City as whether it is acceptable as an approved equal.

G. All electrical equipment and materials, including installation and testing, shall conform to the applicable codes and standards listed in this and other Sections. All electrical work shall conform with the National Electrical Code (NEC) 2020 issue. Nothing on the Drawings or in the Specifications shall be construed to permit work or materials not conforming to these codes and standards.

H. Electrical Contractor should attend the pre-bid job walk and it is highly recommended Electrical Contractor shall have accomplished the following:

1. Thoroughly examine existing conditions before submitting his bid proposal to perform any work. He shall compare site conditions with data given on the plans or in these Specifications. No allowance shall be made for any additional costs incurred by the Electrical Contractor due to his failure to have examined the site or to have failed to report any discrepancies to the City prior to bid.

2. Verify all measurements and conditions and shall be responsible for the correctness of same. No extra compensation will be allowed because of differences between work shown on the Drawings and measurements at the site.

I. It is the Electrical Contractor's responsibility to be fully familiar with the existing conditions and local requirements and regulations. New MCCs may be installed in areas with limited space. MCC & other equipment footprints were developed based on best available information. Contractor is responsible for any additional conduits, wires, construction costs, engineering design requirements, etc. to accommodate MCCs that are larger than that shown on Contract Documents

J. Any major deviations in location and conduit routing that the Electrical Contractor makes without the express written review or direction of the Engineer, shall be considered to have been made at the Electrical Contractor's sole responsibility. Such deviations made by the Electrical Contractor shall be reflected on the Electrical Contractor supplied "Record Drawings" and "Conduit and Wire Routing Schedule". The City will deduct an amount equal of reimbursement from the Electrical Contractor's contract for all engineering, drafting, and clerical expenses associated with updating the Record Drawings and Conduit and Wire Routing Schedule due to any major unauthorized changes.

K. The term "Engineer" used throughout this Division 16 is the "City of Milpitas" Engineer or their designated Engineer representative." The term "City" in Division 16 is the "City of Milpitas. When "Contractor" is listed in these documents without further definition such as "Electrical Contractor", it is to mean the "Prime or General Contractor."

1.02 RELATED WORK IN OTHER SECTIONS

A. The following are covered in other sections in the Contract documents and are part of Division 16.

1. Section 16110 – Conduit, Boxes & Grounding.

2. Section 16120 – Wire, Fuses & Terminal Blocks.

3. Section 16250 – Automatic Transfer Switch.

4. Section 16426 – Main Switchboard.

5. Section 16470 – Panelboard and Panelboard Transformer.

6. Section 16480 – Motor Control Center.

7. Section 16481 – Variable Frequency Drive.

8. Section 16605 – Electrical System Analysis.

9. Section 16915 – Control Strategies.

10. Section 16940 – Instrumentation.

B. The contents of this section apply to all "electrical and instrumentation" equipment suppliers and manufacturers doing work listed in following sections:

1. Division 1 – Submittals.

2. Division 11 - Equipment.

3. Division 13 - Special Construction.

4. Division 15 - Mechanical.

1.03 ELECTRICAL CONTRACTOR QUALIFICATIONS

A. It is the intent of this Division that the complete responsibility for management and installation of the electrical and instrumentation required for this project be by the Electrical Subcontractor. This responsibility includes, but not limited to, supervision and coordination of work performed by all suppliers of Division 16.

B. Contractor shall submit the proposed Electrical Sub-Contractor and System Supplier that will be used on this project.

C. The Electrical Subcontractor shall meet the following minimum qualifications:

1. Has a current C-10 Electrical Subcontractor's License.

2. Has regularly engaged in similar electrical contracting for the Municipal Water and Wastewater Industry.

3. Has successfully performed work of similar or greater complexity on at least two previous projects under one company name and under the present company name.

4. Has all persons performing work as electricians certified by the California Apprenticeship Council per California Labor Code Section 3099.

5. Has been actively engaged in the type of electrical and instrumentation work specified in this Division for a minimum of two years.

1.04 SYSTEM SUPPLIER QUALIFICATIONS

A. General:

1. It is the intent of this Division that complete responsibility in the supplying of the MCC, and all instrumentation listed for Division 16 in Section 16940 Appendix "A" Device Index and other equipment required for this project be supplied by one System Supplier. This responsibility includes, but not limited to, all work necessary to select, furnish, program, supervise installation, calibrate, and place into operation all transmitters, instruments, controllers, alarm equipment, monitoring equipment, and accessories as specified herein.

2. The system supplier shall have an on staff project engineer with prior experience on similar sized projects. This project engineer shall coordinate the technical aspects of this project and prepare the submittals and drawings. The system supplier project engineer shall attend all coordination meetings and be on-site when requested by the City's Resident Engineer.

B. Pre-Qualified System Suppliers

1. The Suppliers listed below have been determined to meet minimum qualifications specified in this Division and are pre-qualified by the City for providing supplier bids as system suppliers on the project.

   a. Tesco Controls (Phone 916 395-8800).

   b. Primex (Phone 707 449-0341).

   c. Technical Systems, Inc. (TSI) (Phone 530 710-3325)

   d. Control Systems West (Phone 707 763-1108)

   e. Glenmount Global Solutions (Phone 707 258-8400)

C. Non Pre-Qualified Suppliers

1. System Suppliers not pre-qualified by the City shall submit the information listed herein 14 calendar days prior to bid, and if approved by the City, will be listed in a Contract addendum prior to bid opening.

2. Each System Supplier <u>not</u> pre-qualified shall submit they meet the following minimum qualifications:

   a. Has regularly engaged in similar instrumentation systems for the Municipal Water and Wastewater Industry.

   b. Has successfully performed work of similar or greater complexity on at least five previous projects under one company name and under the present company name.

   c. Has been actively engaged in the type of PLCs and instrumentation work specified in this Division for a minimum of five years.

   d. Employs personnel on this project who have successfully completed ISA or equal training courses on general purpose instrumentation.

   e. Has a permanent, fully staffed and equipped service facility within 150 miles of the project site for a minimum of 1 year prior to bid date. Service facility shall be under same company name as System Supplier and same company shall be staffed with personnel and equipment required to maintain, repair and calibrate the instrumentation system. Subletting warranty to third party is not acceptable.

3. Non-pre-qualified System Suppliers shall submit detailed information of the following to the City for determination of pre-qualification:

   a. Company history.

b. List of five (5) completed projects of similar size and nature.

1) Provide completion dates of projects.

2) References of City Representative in charge of project, including contact name and telephone number.

c. List of projects in progress.

1) Description of scope of projects.

2) Dollar amount of projects.

d. Complete 2022 Year End Financial statement prepared by a Certified Accountant or complete 2022 Company Tax Returns listing assets and liabilities.

4. Additional information for clarification as requested by the City in writing shall be provided by the System Supplier asking for the pre-qualification or pre-qualification will automatically be denied.

5. System Supplier providing financial statements lacking detail or stating that detailed financial records are proprietary will be disqualified as a pre-qualified System Supplier and is grounds alone for disqualification.

6. Any pre-qualification package deemed incomplete or lacking sufficient information to determine pre-qualification will result in System Supplier not being pre-qualified. No reason will be released on why a System Supplier was not pre-qualified.

D. No reason will be released on why a System Supplier was not prequalified.

1.05 CONTRACT DOCUMENTS

A. The Contract drawings and specifications are intended to be descriptive of the type of electrical system to be provided; any error or omissions of detail in either shall not relieve the Contractor from the obligations thereunder to install in correct detail any and all materials necessary for a complete operational system, at no additional cost.

B. The Contract drawings are generally diagrammatic; exact locations of electrical products shall be verified in the field with the Engineer. Except where special details on drawings are used to illustrate the method of installation of a particular piece or type of equipment or materials, the requirements or descriptions in this Section shall take precedence in the event of conflict.

C. Conflicts between the Contract drawings and the specifications shall be brought to the attention of the Engineer.

D. The Contract Electrical elementary, elevation and one-line diagrams are the basis of the electrical system to be provided and are for reference only. It is the Contractor's responsibility to adjust and make minor revisions to the diagrams as necessary for operational system at no additional cost to the City. Additional isolators, relays, wiring, terminal blocks, etc., shall be provided for an operation system at no additional cost to the City.

E. Location at facilities of new equipment, inserts, anchors, panels, pull boxes, conduits, stub-ups, and fittings for the electrical system are to be determined by the Contractor and Engineer at time of installation. Contractor shall make minor adjustments to locations of electrical equipment required by existing conditions and coordination with other trades at no additional cost. Minor adjustments are defined as those adjustments required due to equipment size changes or variations between different equipment suppliers.

F. The Conduit and Wire Routing Schedule, wire fill, and number of conduits are based on the best information available.

1. It is the Contractor's responsibility to modify the conduit schedule based upon Shop Drawings for the actual equipment. Such modifications in conduit sizes and numbers of conductors shall be at no additional cost to the City, if such changes are the direct result of the equipment selected by the Contractor.

2. A copy of the Conduit Schedule and Electrical plans showing conduit routing shall be updated weekly by the Contractor. Progress payments will be withheld if during monthly checks it is found that the contractor fails to maintain the Conduit Schedule updates.

G. Electrical & instrumentation, conduit & wire lengths shown on circuit Drawings are approximate. The Contractor is responsible for determining actual lengths for bidding and installation purposes.

H. All equipment shall be installed and located so that it can be readily accessed for operation and maintenance. The Engineer reserves the right to require minor changes in location of equipment, without incurring any additional costs. These minor changes are changes which would provide adequate clearance and work areas in front of and around equipment.

I. Provide means to furnish equipment and accessories, do the installation, complete connections, submit documentation, perform start-up, and be responsible for the warranty.

J. Where conduits are shown as "home runs" on the Contract drawings or stated to be furnished, but not explicitly shown, as part of the scope of work; the Contractor shall provide all fittings, boxes, wiring, etc. as required for completion of the raceway system in compliance with the NEC and the applicable specifications in this Section.

K. No changes from the Contract drawings or specifications shall be made without written approval of the Engineer. Should there be a need to deviate from the Contract documents, submit written details and reasons for all changes to the Engineer for review within 30 days after the award of the contract.

L. When existing conduits are to be used, it is the Contractor's responsibility to verify conduit size and routing. This includes all potholing or other location methods. Existing conductors and conduits damaged by Contractor during construction shall be repaired or replaced at no cost to City.

M. The resolution of conflicting interpretation of the Contract documents shall be as determined by the Engineer.

N. The Electrical Contractor shall maintain a separate set of neatly and accurately marked set of Record Documents, consisting of spreadsheets, specifications and full size blue-line Electrical (E-Series) and Instrumentation (I-Series) Contract Drawings.

1. These documents are to be used specifically for recording the as built locations and layout of all electrical and instrumentation equipment, routing of raceways, junction and pull boxes, and other diagram or document changes.

2. These Record documents shall be kept up-to-date during the progress of the job, with all "change orders," submittal modifications, and construction changes shown and stamped with “As-Built” at end of job. These Record documents shall not be used for daily construction use and shall not contain any mark-ups that are unrelated to as-built corrections.

3. The following lists the record documents shall be as-built by Electrical Contractor:

   a. E-Series Drawings.

   b. Panelboard schedules.

   c. Conduit and Wire Routing Schedule.

      1) A copy of the Conduit and Wire Routing Schedule and Electrical plans showing conduit routing shall be updated weekly by the Contractor. Progress payments will be withheld if during monthly checks it is found that the contractor fails to maintain the Conduit Schedule updates.

   d. Lighting Schedule.

   e. Duct banks and their routing with offset measurement and indicate changes in depth. Duct bank elevations shall not be drawn or penciled in by hand. Provide CAD drawings of duct banks.

4. The following lists the record documents that shall be as-built by System Supplier to be maintained by Electrical Contractor:

   a. I-Series Drawings.

   b. Instrumentation Index.

5. Record documents shall be kept current weekly with all "change orders", submittal modifications, and construction changes shown. Record Documents shall be subject to the inspection by the Engineer at all times, progress payments or portions thereof may be withheld if Record Documents are not accurate or current.

6. When documents are changed, they shall be marked with erasable colored pencils using the following coloring scheme:

   a. Additions - Red

   b. Deletions - Green

   c. Comments - Blue

   d. Dimensions - Black

7. Show the following on the Electrical (E-Series) Record Contract Drawings by dimension from readily obtained base lines:

   a. Exact location, type and function of electrical and instrumentation equipment and devices.

   b. Precise routing and locations of underground conduits, pullboxes, junction boxes, etc. that make-up the raceway system.

   c. Show the dimensions, location and routing of electrical work which will become permanently concealed.

   d. Show complete routing and sizing of any significant revisions to the systems shown.

8. Prior to acceptance of the work, the Contractor shall deliver to the Engineer one set of record full size drawings neatly marked accurately showing the information required above.

1.06 COORDINATION

A. The Contractor shall coordinate the electrical work with the other trades, code authorities, utilities, and the Engineer; with due regard to their work, towards promotion of a rapid completion of the project. If any cooperative work must be altered due to lack of proper supervision of such, or failure to make proper provisions, then the Contractor shall bear expense of such changes as necessary to be made in work of others.

B. The Contractor shall examine the architectural, mechanical, structural, electrical and instrumentation equipment provided under other Sections of this Contract in order to determine the exact routing and final terminations for all conduits and cables. The exact locations and routing of cables and conduits shall be governed by structural conditions, physical interferences, and the physical location of wire terminations on equipment. Conduits shall be stubbed up as near as possible to equipment terminals.

C. Manufacturer's directions and instructions shall be followed in all cases where such is not shown on the Contract Drawings or herein specified or have stipulations in order to meet warranty requirements.

D. Schedule within 20 days after award of Contract all service installations and connections with utilities. Delays due to lack of effort by the Contractor which delay the project

completion for lack of utility services will not be considered valid and Contract liquidated damages will be assessed.

E. The Contractor shall cease work at any particular point, temporarily, and transfer his operations to such portions of work as directed, when in the judgment of the City it is necessary to do so.

F. Prior to commencing construction, the Electrical Subcontractor shall arrange a conference with the General Contractor and City as well as equipment suppliers, and shall verify types, sizes, locations, requirement, controls and diagrams of all equipment furnished by these Contractors. He shall, in writing, inform the Engineer that all phases of coordination of this equipment have been covered and if there are any unusual conditions, they shall be enumerated at this time.

G. Coordinate with City, witnessing Engineer, PLC programmer, SCADA programmer, and System Supplier to test the entire system.

H. Coordinate submittals and required meetings with the work, panel fabrication and factor tests so that project will not be delayed. This coordination shall include scheduling the different categories of submittals, so that one will not be delayed for lack of coordination with another. No extension of time will be allowed because of failure to properly schedule submittals.

1.07 SUPERVISION

A. The Contractor shall schedule all activities, manage all technical aspects of the project, coordinate submittals and drawings, and attend all project meetings associated with this Section.

B. The General Contractor shall supervise all work in this Section, including the electrical system general construction work, from the beginning to completion and final acceptance.

C. The General Contractor shall supervise and coordinate all work in this Section to ensure each phase of the project, submittal, delivery, installation, and acceptance testing, etc. is completed within the allowable scheduled time frames.

D. The Electrical Contractor shall be responsible for obtaining, preparing, completing, and furnishing all paper work for this Section; which shall include transmittals, submittals, forms, documents, manuals, instructions, and procedures.

1.08 INSPECTIONS

A. All work or materials covered by the Contract documents shall be subject to inspection at any and all times by the City. If any material does not conform to the Contract documents, or does not have a favorably reviewed submittal status; then the Contractor shall, within three days after being notified by the City, remove said material from the premises; and if said material has been installed, the entire expense of removing and replacing same, including any cutting and patching that may be necessary, shall be borne by the Contractor.

B. The Contractor shall give the City 10 working days' notice of the dates and time for inspection. Date of inspection shall be as agreed upon by both the Contractor and City.

C. Work shall not be closed in or covered over before inspection and approval by the Engineer. All costs associated with uncovering and making repairs where non-inspected work has been performed shall be borne by the Contractor.

D. The Contractor shall cooperate with the Engineer and provide assistance at all times for the inspection of the electrical system under this Contract. The Contractor shall remove covers, provide access, operate equipment, and perform other reasonable work which, in the opinion of the Engineer, will be necessary to determine the quality and adequacy of the work.

E. Before request for final inspection is made, the Contractor shall submit to the City in writing, a statement that the Contractor has made his own thorough inspection of the entire project enumerating punch list items not complete and that the installation and testing is complete and in conformance with the requirements of this Division.

F. The City may arrange for a facility inspection by Cal-OSHA Consultation Service at any time. The Contractor shall make the necessary corrections to bring all work in conformance with Cal-OSHA requirements, all at no additional cost to the City.

G. Contractor will be Responsible for any Additional Cost for Overtime, Weekend Overtime or Differential Time, Expenses for Inspection of Defective Work that has to be re-inspected.

1.09 JOB CONDITIONS

A. The Contractor shall make all arrangements and pay the costs thereof for temporary services required during construction of the project, such as temporary electrical power and telephone service. Upon completion of the project, remove all temporary services, equipment, material and wiring from the site as the property of the Contractor.

B. The Contractor shall provide adequate protection for all equipment and materials during shipment, storage and construction. Equipment and materials shall be completely covered with two layers of plastic and set on cribbing six inches above grade so that they are protected from weather, wind, dust, water, or construction operations. Equipment shall not be stored outdoors without the approval of the Engineer. Where equipment is stored or installed in moist areas, such as unheated buildings, etc., provide an acceptable means to prevent moisture damage, such as a uniformly distributed heat source to prevent condensation.

C. The elevation of the project site is shown on Contract Civil Drawings. All equipment shall be derated, as recommended by the manufacturer or in accordance with ANSI C37.30.

D. The normal outdoor, not in direct sunlight, ambient temperature range of the job site will vary between 20 to 110 degrees Fahrenheit. All equipment shall be rated to operate in these temperature ranges or provisions for adequate heating and cooling shall be installed, at no additional cost to City.

E. The jobsite is prone to vandalism and theft. Contractor shall be responsible for securing all materials and equipment against theft and vandalism for the duration of the project.

F. Contractor shall utilize temporary services during construction of the project. No Contractors shall utilize building power, receptacles, etc. during construction.

1.10 SUBMITTAL AND DRAWING REQUIREMENTS

A. General

1. Electrical submittals shall be submitted for favorable review by the Engineer per this subsection and Division 1. They shall be complete giving all details of connections, wiring, instruments, enclosures, materials and dimensions. Standard sales literature will not be acceptable.

2. A copy of the appropriate Division Specification Sections, with addendum updates included and with each paragraph check-marked to indicate specification compliance or marked to indicate requested deviations from specification requirements. Check marks (√) shall denote full compliance with a paragraph as a whole. If deviations from the specifications are indicated and, therefore, requested by the Contractor, each deviation shall be underlined and denoted by a unique number in the margin to the right of the identified paragraph. The remaining portions of the paragraph not underlined will signify compliance on the part of the Contractor with the Specifications. The submittal shall be accompanied by a detailed, written justification for each numbered item explaining variance or non-compliance with specifications. Failure to include a copy of the marked-up specification sections, along with justification(s) for any requested deviations to the specification requirements, with the submittal shall be sufficient cause for rejection of the entire submittal with no review.

3. Submittals shall also include all other information as may reasonably be required, in the opinion of the Engineer, to demonstrate fully that the materials and equipment to be furnished and the methods of work comply with the provisions and intent of the Contract Documents. Additional submittal requirements are specified in each individual Section of the Specifications.

4. The Contractor shall coordinate submittals and required meetings with the work, panel fabrication and factory tests so that project will not be delayed. This coordination shall include scheduling the different categories of submittals, so that one will not be delayed for lack of coordination with another. No extension of time will be allowed because of failure to properly schedule submittals.

5. No submittal documents shall be labeled as proprietary. Labeling documents as proprietary will be sufficient cause for rejection of entire submittal. The City reserves the right to copy or duplicate any and all portions of the documents provided for the project including copyrighted documents as desired.

6. No material or equipment shall be allowed at the job site until the submittal for such items has been favorably reviewed by the Engineer and all comments have been addressed.

7. Identify all submittals by submittal number on letter of transmittal. Submittals shall be numbered consecutively and resubmittals shall have a letter suffix. For example:

   a. 1st submittal: 1.

   b. 1st resubmittal: 1A.

   c. 2nd resubmittal: 1B, etc.

8. For each resubmittal, provide a copy of submittal comments and a separate letter, on Company letterhead, identifying how each submittal comment has been addressed in the resubmittal.

9. The Contractor shall include in writing on a separate submittal cover sheet any proposed departures from the Contract documents, and the reasons therefore. Incorporate no such departures into the work without prior written approval of the Engineer. The approval of departures which substantially deviates from the Contract documents shall be evidenced by a "change order" directive by the Engineer. Any cost differential associated with this change order must be negotiated with the Engineer to amend the Contract to reflect the costs or savings.

10. Exceptions to the Contract specifications or drawings shall be clearly defined by the equipment supplier.

    a. Data shall contain sufficient details so a proper evaluation may be made by the Engineer. Contractor shall provide separate letter (located in the front of the submittal) detailing specific exceptions to the Contract Specifications or Drawings.

    b. Exceptions that are noted in the marked-up Drawings or Specifications, but not listed on the Exceptions/Clarifications letter, will be considered as non-responsive and not accepted as changes to the Contract Documents

11. The equipment specifications have been prepared on the basis of the equipment first named in the Specifications. The Contractor shall note that the second named equipment, if given, is considered acceptable and equal equipment, but in some cases additional design, options, or modifications may be required to meet Specifications all at no additional cost to the City.

12. The decision of the Engineer governs what is acceptable as a substitution. If the Engineer considers it necessary, tests to determine equality of the proposed substitution shall be made, at the Contractor's expense, by an unbiased laboratory that is satisfactory to the Engineer.

B. The electrical submittals shall include but not be limited to data sheets and drawings for each product together with the technical bulletin or brochure. The electrical submittals shall include:

1. Product (item) name used herein and on the Contract Drawings.

2. The Manufacturer's complete model number or other designation.

3. For each resubmittal, provide a copy of submittal comments and a separate letter, on Company letterhead, identifying how each submittal comment has been addressed in the resubmittal.

4. Tag name/number per the drawings or schedules.

5. Index Binder Tab Dividers.

6. Detailed electrical one line, elementary and loop diagrams and interconnection diagrams showing all wiring requirements for each system.

7. Complete documentation with full description of operation.

8. Complete catalog cuts with full description of equipment. General sales literature will not be acceptable. The part or model number with options to be provided shall be clearly identified. Where more than one item or catalog number appears on a catalog cut, the specific item(s) or catalog numbers(s) proposed shall be clearly identified.

9. Location of assembly at which it is installed.

10. Input-output characteristics.

11. Range, size, and graduations as required.

12. Physical size with dimensions and mounting details.

13. Enclosure size, fabrication details and color.

14. Enclosure backpan layout and elevation drawings to scale.

15. Quantity and quality requirements for electric power, air, and/or water supply.

16. Materials of construction of components.

17. Nameplate schedule.

18. Bill of Materials: A complete Bill of Materials list shall be provided similar in format to the Bill of Material shown in Appendix "A". The Electrical Contractor shall submit separate Bill of Materials for electrical components and Generator. The System Supplier shall submit a separate Bill of Material for the VFD panels, Switchboard, ATS, Control Panel, spare parts and another listing all field

instruments. Generic names or part numbers used by a distributor or Systems House are not acceptable; originating manufacturer's name and part number shall be listed.

19. Failure to provide submittals with heavy duty permanent plastic labeled index tabs may be grounds for immediate rejection without review.

20. Electronic PDF version of submittals shall follow hard copy format of submittal and shall be "bookmarked" at each index, subtab, copy of appropriate check marked Specification Section, bill of materials, copy of submittal comments (for resubmittals), Contractor's response to submittal comments (for resubmittals), drawings, etc. Failure to bookmark PDF may be grounds for immediate rejection without review.

21. Electronic submissions of submittals may be provided for submittals less than 40 pages and without drawings. Submittals equal to or over 40 pages or those that contain drawings shall be provided in a hardcopy format. Hardcopy submittals shall be provided in binders as specified herein. The City reserves the right to reject submittals that fail to be organized as described herein.

C. Drawing Requirements: All drawings shall be drawn using AutoCAD, drawn in a professional manner and submitted on 11" x 17" sheets. Shop Drawings shall be provided with minimum drafting details as illustrated on the Contract "electrical" series drawings. Diagrams shall carry a uniform and coordinated set of wire colors, wire numbers, and terminal block numbers. RTU backpan supplier will provide detailed drawings for development of loop & interconnection drawings. The shop drawings shall include:

1. Electrical one line diagrams detailing all devices associated with the power distribution system. The following applicable information or data shall be shown on the one-line diagram: location, size and amperage rating of bus; size and amperage rating of wire or cable; breaker ratings, number of poles, and frame sizes; auto-transfer switch; generator and breaker; utility metering, voltage, amperage, number of wires and phases; ground size and connections; neutral size and connections; voltage, amperage and wattage monitoring instruments; power fail and other protective devices; fuse size and type; distribution transformers; panelboards; starters; contactor size and overload range; motor full load amperage of submitted motor and horsepower; rating for miscellaneous loads; etc. Submit of all equipment motor voltage, phase and full load amps provided for this project for verification of accuracy of submitted one line drawings.

2. Elementary diagrams shall be provided for all relay logic, power supplies, PLC and other wiring not shown on the loop diagrams. All elementary diagrams shall be drawn in EMP/EGP format and standards similar to those shown on the E-series elementary diagrams showing ladder rung numbers and coil & contact cross referencing numbers. Show all panel wiring as solid lines and all field wiring as dashed lines.

3. Analog and digital I/O loop diagrams shall be provided showing the wiring requirements for each instrument loop. Graphic symbols shall conform to ISA

S5.4 drawing standards. A loop diagram shall be furnished for each analog and digital I/O process and all PLC I/O cards. Loop diagrams shall include the following as a minimum:

a. The loop diagram shall be drawn with sufficient detail to express control philosophy. The diagram shall show all components and accessories of the instrument loop, highlighting special safety and other requirements. These diagrams shall be arranged to emphasize device elements and their functions as an aid to understanding the operation of a system and for maintaining or troubleshooting that system.

b. All termination points on the loop diagram shall be shown with the actual equipment identification, device and relay terminal number or letter, and I/O point P&ID English descriptor and tag name.

c. Energy sources - electrical power, air supply, pneumatic and hydraulic fluid supply, designating voltage, current, pressure, etc. shall be shown in detail on the diagram. Input and output signals (e.g., 1-5 VDC, 4-20 mA DC, 3-15 psig, etc.), power and instrument supplies to devices (e.g. 120 VAC, 24 VDC, 80 psig, etc.) shall be shown.

d. Engineering units shall be shown on the diagram. Each wire label and color code shall be shown. Signal and DC polarities shall be shown.

e. All spare wires, cables and termination points shall be shown. All jumpers, grounding, shielding, power supply details shall be shown.

4. Enclosure and Elevation layout diagrams for all electrical panels and enclosures; show all front panel and backpan devices drawn to scale. Show fabrication methods and details; including material of construction, paint color, support & latching mechanisms, fans (with removable metal filters) & ventilation system, and conduit entrance areas.

5. Interconnection Diagrams - An interconnection diagram shall be furnished for each electrical and instrumentation system, even if one was not shown explicitly on the Contract Drawings. Interconnection diagrams shall show for each piece of equipment all wiring between all devices, panels, cabinets, terminal boxes, control equipment, motor control centers and any other devices and equipment even if they are not provided by the System Supplier. Each interconnection diagram shall include the following as a minimum:

a. Interconnect Drawings shall be prepared for all equipment by the System Supplier. All conduits listed in the Conduit and Wire Routing Schedule shall have interconnection drawings prepared by the System Supplier.

b. The diagrams shall be utilized by the electrician during all phases of installation and connection of all conductors to ensure coordination of equipment interconnects.

c. The diagrams shall show wiring as field labeled at the end of the project when as-builts are submitted.

d. Each wire labeling code as actually installed shall be shown. The wiring labeling code for each end of the same wire must be identical.

e. All devices and equipment labeling codes shall be shown.

f. Interconnections shall be of the continuous line type with identified lines. Diagrams of the wireless or wire schedule type are not acceptable. Bundled wires shall be shown as a single line with the direction of entry/exit of individual wires clearly shown.

g. All terminations points on the diagram shall be shown with the actual equipment identification terminal number or letter. This identification of terminations includes terminal blocks, junction boxes, all devices, computer I/O points, etc.

h. Diagrams shall include raceway numbers, raceway size, raceway type, cable numbers, wire color code, and wire numbers. Wire numbers used on interconnection diagrams shall match wire numbers used on other submitted drawings (i.e. elementary diagrams, I/O wiring diagrams, etc.)

i. Each wire, AWG cable size and color code shall be shown. Each conduit with the conduit label and conduit size and wire fill shall be shown. Wire and cable routing through conduits, wireways, manholes, handholes, junction boxes, terminal boxes and other electrical enclosures shall be shown with the appropriate equipment labels. All spare wires, cable, and termination points shall be shown. Cable shields shall be shown.

j. Labeling codes for terminal blocks, terminals, wires, cables, panels, cabinets, instruments, devices, and equipment shall be shown. Place “øA”, “øB”, and “øC” label next to each breaker to identify phase connected to.

k. Schematic symbols shall be used for field devices, showing electrical contacts. Signal and DC circuit polarities shall be shown.

l. The diagrams shall show all other Contract and supplier drawing numbers, for reference, that are associated with each device that is interconnected.

m. The diagrams shall show all other Contract and Supplier drawing numbers, for reference, that are associated with each device that is interconnected.

1) Attached to each interconnect, a copy of all the support documents used in preparing interconnects shall be submitted. This includes:

a) Current issues of panel schematics

b) Elementary diagrams

c) Panelboard schedules

d) Conduit schedules

e) One-line diagrams

f) Connection diagrams

g) Terminal block diagrams

h) Submittals (including instrumentation wiring diagrams)

i) Contract Drawings, vendor drawings and all other data used to develop the interconnection diagram as noted in the "Reference Documents" corner of interconnect drawings.

n. Interconnects shall include list of all applicable reference drawings, request for clarifications, field instructions and change orders. All deletions and additions of equipment, wire and cables shall be clearly shown.

o. Clearly state why termination data is not available. Statements should point to applicable area and be placed in a bold box.

p. Field wiring shall not start before the interconnection drawing have been submitted by the Contractor and approved by the City.

q. Do not show the same wires or jumpers, or panel wiring on the elementary or loop and interconnection diagrams. All jumper, shielding, and grounding termination details not shown on the connection diagrams shall be shown on the interconnection diagrams.

r. Interconnection diagrams shall be submitted and approved by City for each electrical and instrumentation system. The Contractor shall not pull in any wires into conduits that does not have approved interconnects. If the Contractor pulls in wire without City approval of associated interconnect drawings, the Contractor will not be reimbursed for labor for re-pulling in wires even if there was an error in wire fill or sizing. Also, if the Contractor pulls in wire without City approval of associated interconnect drawings, then all progress payments related to field wiring for that particular area of work will be withheld until approved interconnect drawings are in use.

s. All interconnection diagrams shall be prepared by a System Supplier under the supervision of or by a Registered Electrical Engineer and shall bear that Engineer's professional stamp and signature on each and every

interconnect drawing submitted for approval and on as-built interconnect drawings and those used in the field installation. Engineer's stamp missing from interconnection drawings will be sufficient grounds to reject entire interconnection drawing submittal without review. All deletions and additions of equipment, wire, and cables shall be clearly shown. Interconnects shall include list of all applicable reference Drawings, request for clarifications, field instructions, and change orders.

t. Example format of Interconnection diagram is shown on Contract "E"-series Drawings or may be obtained from the Engineer.

u. Interconnection Drawings shall use bundled wire format as shown on example interconnect Contract Drawing. Interconnect drawings submitted with wiring of a single conduit run separated onto multiple interconnect drawings will be rejected without review. A single conduit run with wiring shown on separate interconnect drawings will be allowed only after written approval is given by the Engineer for each conduit run prior to submitting the associated interconnect drawings.

v. Only field wiring between switchboards, MCCs, Panelboards, Control Panels, and other electrical and instrumentation devices or equipment shall be shown on interconnection drawings. No internal panel wiring shall be shown on interconnect drawings except jumper or other wiring to be installed in field by Electrical Contractor.

w. Interconnect Drawings along with the corresponding support documents shall be submitted in a separate submittal package. Interconnect drawings submitted with non-interconnect drawing packages will be rejected. The latest support documents shall be obtained by system supplier from Contractor for all non-division 16 instruments, panels, and equipment, and included with interconnect drawing submittal. Support documents shall have their submittal number marked in upper right hand corner.

x. Interconnect drawings shall be prepared for all equipment by the System Supplier with the exception of the Security Alarm System which shall produce their own interconnect drawings.

y. Provide a notes section on each interconnect drawing. In the note section list any variances from the Contract conduit schedule necessary for completing the interconnections. Change orders regarding wire fill, conduit schedule and errors in plans regarding conduits and wires will not be processed until interconnect drawings have been received for such work.

z. The field electrician shall mark-up all interconnection diagrams during installation to show accurate as-built wiring, conduits runs, terminations, etc. If interconnection drawings are not properly as-built, the Electrical Contractor will have cost deducted from the Contract for the City to

field verify and prepare as-built interconnection drawings amount. The amount of the deduction shall be determined on a time and material basis. The cost of such work shall be $120.00 per hour, plus expenses.

aa. The system supplier shall be responsible to collect all information necessary to complete each interconnection drawing at no additional cost to the City. This includes making field trips to collect all terminal connection data for new and existing, MCCs, switchboards, panelboards, instruments, equipment and electrical panels.

bb. An index of drawings shall be provided with each Interconnection submittal listing the unique drawing number and the description of the interconnect drawing (e.g. Drawing 4321-IC1004 Pump 1004 Interconnect Drawing).

cc. Provide conduit and interconnect drawing cross reference indexes. Interconnect Conduit Index shall list all conduits listed in the Conduit & Wire Routing schedule and its associated Interconnection Drawing number. An Interconnection Drawing Index shall list all Interconnection drawings and the conduits shown on that specific drawing. These two indexes shall be at the front of all interconnection drawing submittals.

6. Duct banks and their routing with offset measurement and indicate changes in depth. Duct bank elevations shall not be drawn or penciled in by hand. Provide CAD drawings of duct banks.

7. Conduit layout diagrams drawn to scale utilizing AutoCAD, with all conduit tags and size listed, shall be submitted and approved prior to underground conduits being installed. Conduits, duct bank and enclosure entries shall be drawn to scale. The following conduit layout diagrams shall be prepared and submitted by Electrical Contractor for approval.

   a. Diagrams for conduit stub-up locations into the bottom of:
      1) All Panels and Enclosures with 10 or more conduit entries.
      2) All new MCCs.
      3) Power Transformers.

   b. Diagrams for conduit cross sections for:
      1) All concrete duct banks.
      2) Each conduit run between all vaults and pull boxes shown on Contract Drawings.

8. Submit full size drawing of all nameplates and tags, as specified herein, to be used on project. The Engineer has the right to adjust nameplate engraving titles during submittals at no additional cost to the City. Submittal to include the following:

   a. Dimensions of nameplate.

b. Exact lettering and font for each nameplate.

c. Color of nameplate.

d. Color of lettering.

e. Materials of construction.

f. Method and materials for attachment.

g. Drawing showing location of nameplate on each panel.

9. Copying contract drawings and providing them as submittals will be considered unresponsive and the submittal will be rejected without review.

D. Submittal Format - Each submittal shall be bound in a three ring binder, which is sized such that when all material is inserted the binder is not over 3/4 full. Binder construction shall allow easy removal of any page without complete manual disassembly; spiral ring type binders are not acceptable.

1. Each binder shall be appropriately labeled on the outside spine & front cover with the project name, contract number, equipment supplier's name, specification section(s), and major material contained therein.

2. Submittals shall be provided in binders as specified herein. The City reserves the right to reject submittals that fail to be organized as described herein.

3. An index shall be provided at the inside of the front cover. This index shall itemize the contents of each tab and subtab section. Also list the project name, contract number and equipment supplier's name, address, phone number, and contact person on the index page.

4. Resubmittals shall be provided with a copy of the previous submittal comments and a separate letter, on company letterhead, identifying how each submittal comment has been addressed in the resubmittal.

5. All copies shall be clear and legible. Data sheets shall be provided for each instrument, with an index and proper identification and cross-referencing. Clearly identify calibration ranges for all instruments.

6. Exceptions to the Specifications or Drawings shall be provided at the front part of the submittal.

7. Field equipment shop documents, panel equipment shop documents, drawings, and bill of materials shall be grouped under separate tabs. Shop documents shall be ordered in the same sequence as their corresponding Contract specification subsection.

8. Data summary sheets shall be provided to subtab all shop documents for each individual piece of equipment. Data summary sheets shall be bright yellow or blue

for easy identification. The data summary sheets shall have the following information preceding their corresponding shop documents:

a. Product identification; name used herein and on the Contract Drawings.

b. The manufacturer's model number, part number or other designation. This shall include the specific numbers of all proposed options

c. Tag name/number per the drawings or schedules.

d. Location of assembly at which it is installed.

e. Range, span, engineering units, input and output characteristics.

f. Contract specification subsection number.

9. Drawings that are "C" or "D" size shall be folded with the title block visible and placed in reinforced clear plastic pockets.

10. Request for information (RFIs) shall not be included in submittals. RFIs supplied with submittals will not be answered. RFIs shall be submitted following proper channels.

1.11 CHANGE ORDER PRICING

A. All change order pricing by Contractor or System Supplier shall be per General Conditions 5.4.

1.12 CODES AND STANDARDS

A. All electrical/instrumentation equipment and materials, including installation and testing, shall conform to the following applicable codes and standards:

1. ANSI - American National Standards Institute, Inc.

2. CBC - California Building Code, 2022 Edition

3. CEC - California Electrical Code, 2022 Edition

4. CEnC - California Energy Code, 2022 Edition

5. CFC - California Fire Code, 2022 Edition

6. CGBC - California Green Building Code, 2022 Edition

7. EIA - Electronics Industries Association.

8. ETL - Electrical Testing Laboratories.

9. FM - Factory Mutual.

10. GO128 - General Order No. 128, Rules for Construction of Underground Electrical Supply and Communication Systems, Public Utilities Commission of the State of California.

11. IEEE - Institute of Electrical and Electronics Engineers.

12. ICEA - Insulated Power Cable Engineers' Association.

13. ISA - International Society of Automation (ISA) Standards

14. MCC - Milpitas Municipal Code, 2023 Edition,

15. NEC - National Electrical Code, 2020 Edition.

16. NEMA - National Electrical Manufacturers Association.

17. NETA - Acceptance Testing Specifications for Electrical Power Distribution Equipment and Systems, International Electrical Testing Association.

18. NESC - National Electrical Safety Code.

19. NFPA - National Fire Protection Agency.

20. OSHA - Occupational Safety and Health Act Standards.

21. UL - Underwriter's Laboratories, Inc.

B. The revisions of these codes and standards in effect on the date of issuance of the Contract Documents shall apply.

C. Codes and standards referenced shall be considered minimum acceptable work.

D. In instances where two or more codes are at variance, the most restrictive requirements shall apply.

E. Nothing on the Drawings or in the Specifications shall be construed to permit work or materials not conforming to the preceding codes and standards.

F. All work shall also be performed in accordance with the City, State, County or City standards, and local Utility codes.

G. The Contractor shall furnish without extra charge any additional material and labor which may be required for compliance with these codes and standards, even though the work is not explicitly mentioned in the Specifications or shown on the Contract E- Series Drawings.

H. Amperage listed on the single-line drawings for motors are per NEC Table 430.250 and may not necessarily match that of the equipment supplied. It is the electrical system supplier and Contractor’s responsibility to furnish equipment sized for the motors supplied for this project at no additional cost.

I. All electrical work shall conform with the National Electric Code (NEC) 2020 issue and the latest NFPA 70E. Nothing on the Drawings or in the Specifications shall be construed to permit work or materials not conforming to these codes and standards.

PART 2 - MATERIALS

2.01 QUALITY

A. It is the intent of the Contract specifications and drawings to secure the highest quality in all materials and equipment in order to facilitate operation and maintenance of the facility. All equipment and materials shall be new and the products of reputable suppliers having adequate experience in the manufacture of these particular items. For uniformity, only one manufacturer will be accepted for each type of product. Provide the manufacturer's latest design that conforms to these Specifications.

B. All equipment shall be designed for the service intended and shall be of rugged construction, of ample strength for all stresses which may occur during fabrication, transportation, erection, and continuous or intermittent operation. All equipment shall be adequately stayed and braced and anchored and shall be installed in a neat and workmanlike manner. Appearance and safety, as well as utility, shall be given consideration in the design of details. All components and devices installed shall be standard items of industrial grade, unless otherwise noted, and shall be of sturdy and durable construction suitable for long, trouble free service. Light duty, fragile and competitive grade devices of doubtful durability shall not be used.

C. Products that are specified by manufacturer, trade name or catalog number established a standard of quality and do not prohibit the use of equal products of other manufacturers provided they are favorably reviewed by the Engineer prior to installation.

D. Underwriters Laboratories (UL) listing is required for all substituted equipment when such a listing is available for the first named equipment.

E. When required by the Contract specifications or requested by the Engineer, the Contractor shall submit equipment or material samples for test or evaluation. The samples shall be furnished with information as to their source and prepared in such quantities and sizes as may be required for proper examination and tests, with all freight and charges prepaid. All samples shall be submitted before shipment of the equipment or material to the job site and in ample time to permit the making of proper tests, analyses, examinations, rejections, and resubmissions before incorporated into the work.

F. All equipment shall be designed and constructed so that in the event of a power interruption, the equipment specified hereunder shall resume normal operation without manual resetting or operator interaction when power is restored.

G. Signal transmission from remote or field electric and electronic devices shall be 4-20 mA, sourced by a 24 VDC loop supply from the panel that is to receive the signal. Nonstandard transmission methods such as impulse duration, pulse rate, and voltage regulated will not be permitted except where specifically noted.

H. Outputs of equipment that are not of the standard signals as outlined, shall have the output immediately raised and/or converted to compatible standard signals for remote transmission.

I. It is the System Supplier's responsibility to visit jobsite to collect and document existing equipment device part numbers in order for all new equipment to match existing.

2.02 NAMEPLATES & TAGS

A. Equipment exterior nameplates - Nameplate material shall be rigid laminated black phenolic with beveled edges and white lettering; except for caution, warning, and danger nameplates the color shall be red with white lettering. The size of the nameplate shall be as shown on the drawings. No letters are allowed smaller than 3/16". All phenolic nameplates located outdoors shall be UV resistant. Securely fasten nameplates in place using two stainless steel screws if the nameplate is not an integral part of the device. Epoxy cement or glued on nameplates will not be acceptable. Engrave the nameplates with the inscriptions as approved by the Engineer in the submittal.

1. For each major piece of electrical equipment provide a manufacturer's nameplate showing the Contract specified name and number designation, the manufacturer's name, model designation, part number, serial number, and pertinent ratings such as voltage, amperage, # of phases, range, calibration, etc.

2. For each device with a specific identity (pushbutton, indicator, instrument, etc.) mounted on the exterior or deadfront of a piece of equipment provide a nameplate with the inscription as shown in the Contract documents. Where no inscription is indicated in the Contract documents, furnish nameplates with an appropriate inscription providing the name and number of device.

3. For all receptacles and switches (including devices located on Switchboard or MCC), provide a faceplate engraved or stamped with the panelboard and circuit number it is fed from. Also, include on faceplate or on a separate nameplate for each light switch identification use such as “OUTSIDE BUILDING LIGHTS”, “PERIMETER LIGHTS”, “MCC ROOM”, etc. Adhesive plastic labels are not acceptable.

4. All field instruments and devices shall be labeled with designation shown on P&ID diagrams.

5. All transformers and panelboards shall have nameplates with ½" high letters and be engraved with designations as shown on one-line Drawings or as directed by Engineers.

6. All safety and disconnect switches shall have nameplates with ½” high and be engraved with designations as shown on one-line drawings or as directed by Engineers.

7. Underground Pull Box and Vault Cover Identification: Engrave or bead weld pull box covers with minimum 1/4”thickness and 1/2” letters and covers shall be engraved with designations as shown on Contract drawings or as directed by City.

8. Aboveground Pull Box Cover Identification: 316 stainless steel screws attached stamped 316 stainless steel plate nameplates with 1/2” letters and be engraved with designations as shown on Contract drawings or as directed by City.

9. Service entrance equipment shall have engraved nameplate with 1” letters (red with white lettering) indicating type and location of standby generator per NEC 702.7 (A).

10. Service entrance equipment shall have engraved nameplate for generator grounding per NEC 702.7(B)

11. Service Equipment Label: Per NEC 110.24 (A) Service equipment shall be legibly marked in field with the maximum available fault current. Field marking shall include date the fault current calculation was performed and be weather & UV rated. Service equipment shall not be hand labeled.

12. All subpanels shall be identified with an engraved phenolic label of the power source location feeding it (i.e. MCC-100, Panelboard LP-1, etc.)

13. Generator receptacles and generator lug panels shall have engraved nameplate with 1” letters (red with white lettering) per NEC 702.7.(C)

14. Specific equipment fed from more than one feeder shall be properly identified (“Fed from MCC-B and the standby generator”).

B. Equipment Interior Nameplates - Nameplate material shall be white plastic with black machine printed lettering as produced by a KROY or similar machine; except caution, warning, and danger nameplates shall have red lettering.

1. The size of the nameplate tape shall be no smaller than 1/2” in height with 3/8" lettering unless otherwise approved by the Engineer. Securely fasten nameplates in place on a clean surface using the adhesion of the tape. Add additional clear glue to hold the nameplate securely in place when necessary.

2. For each device with a specific identity (relay, module, power supply, fuse, terminal block, etc.) mounted in the interior of a piece of equipment provide a nameplate with the inscription as shown in the Contract documents.

3. Where no inscription is indicated in the Contract documents, furnish nameplates with an appropriate inscription providing the name and number of device used on the submittal drawings. Stamp the nameplates with the inscriptions as approved by the Engineer in the submittal.

4. Nameplates shall not be attached to wireway covers or to removable devices.

5. For all receptacles and switches (including devices located in Control Panel, provide a faceplate machine printed with the panelboard and circuit number it is fed from.

C. Equipment Tags - When there is no space or it is impractical to attach an engraved phenolic nameplate with screws, as is the case with most field devices and instruments, the Contractor shall attach a tag to the equipment with the same inscriptions as specified above in paragraph A. The tag shall be made from stainless steel material and the size of the nameplate shall be no smaller than 3/8"h x 2"w with 3/16" machine printed or

engraved lettering unless otherwise approved by the Engineer. The tag shall be attached to the equipment with stainless steel wire of the type normally used for this purpose. Twisting ends together is not acceptable.

D. Engrave or machine print the nameplates and tags with inscriptions as approved by the Engineer in the nameplate submittal.

E. Provide temporary labels for all instruments and devices immediately when installed. Temporary labels shall be provided with 1/2" letters minimum and labeled with P&ID tag number.

2.03 COMPONENTS

A. Fuses

1. Fuses used in circuits 200 VAC and above shall be time- delay type FNQ or approved equal, 13/32" x 1-1/2", and have an interrupting rating of 10,000 AIC at 500 VAC. Fuse holders shall be of the barrier type and rated 600 VAC.

2. Fuses used in 120 VAC circuits shall be fast-acting type CC or approved equal, 13/32" x 1-1/2", and have a rating of 250 VAC. Fuse-holders shall be of the terminal block type.

3. Fuses used in signal and 24 VDC circuits shall be fast acting type GMA or approved equal, 5mm x 20 mm and have a rating of 250 VAC. Fuse-holders shall be of the terminal block type.

4. Fuses shall be sized in conformance with the NEC.

B. Switches and Pushbuttons

1. Switches (HS) and pushbuttons (HC) for general purpose applications shall be water and oil tight as defined by NEMA 4X, corrosion resistant as defined by NEMA ICS 6-110.58, U.L. listed, standard 30 mm diameter, with round plastic clamp ring. Switches shall be Allen-Bradley 800H, or approved equal.

2. Switches and pushbuttons shall have contacts rated 10 amperes continuous and 600 VAC.

3. Manufacturer's standard size legend plates shall be provided and engraved to specify each switch and pushbutton function. The legend plate color shall be black. Stop and emergency stop pushbuttons shall have red legend plates.

4. Selector switch handles shall be black. Pushbutton caps shall be colors shown on Contract Drawings or approved in submittals.

5. Selector Switch Positions

a. Hand-off-auto (HOA) applications shall have the hand position to the left, off in center, and auto in the right position.

b. On/Off shall have the ON position to the right.

c. Local/Remote shall have the REMOTE position to the right.

d. Open-Close-Auto applications shall have the open position to the left, close in center, and auto in the right position.

6. Red mushroom operator, two position switch that latches in both “in” and “out” positions.

C. Relays and Timers

1. General: Relays and timers shall be provided with N.O. or N.C. contacts as shown on the Contract drawings. All spare contacts shown shall be provided. Contacts shall be rated 10 amps minimum at 120 VAC, 60 Hz unless otherwise stated. Supply power or coil voltage shall be 120 VAC unless shown otherwise on the Contract drawings or when relay is utilized in 24V DC control circuits. Relays and timers shall be designed for continuous duty. All relays shall be U.L. listed. The following is a summary of abbreviations associated with relays and timers:

CR - Control relay

PFR - Power Fail Relay

TR - Timing relay

TDOE - Time delay on energization

TDOD - Time delay on de-energization

2. Control relays (CR) shall be plug-in type with indicating lights and clear see-through sealed or enclosed housing to exclude dust. Sockets for plug-in relays shall be standard industrial type octal 8 or 11 pin with barrier pressure screw terminals. Provide IDEC Type RR, Potter and Brumfield KU, or approved equal. Two form-C contacts (minimum) shall be provided on each relay.

3. Interposing PLC Control relays (CR) shall be plug-in type with indicating lights enclosed housing to exclude dust. Provide Finder 4C series, Schneider Magnecraft Class 782 or 750 or approved equal.

4. The power fail relay (PFR) shall continuously monitor the three phases for power loss, low voltage, phase loss, and phase reversal. The power fail monitor shall have a drop-out voltage adjustment, an adjustable delay on make time delay (0.2 to 8.0 minutes) and a status indicating LED. Power fail relays shall be Time Mark, Diversified SLJ, or approved equal.

5. Time delay relays (TR) shall be solid state plug-in relays with a timer adjustable over the range 1 second to 10 minutes unless other ranges are indicated or required. Provide LED timer energized indicator lamp. Sockets for plug-in timers shall be standard industrial type blade 8 or 11 pin with barriered pressure screw

terminals. Time delay relays shall be IDEC, Potter and Brumfield, or approved equal.

6. Provide and install all moisture or temperature protection relays when required for equipment or motor/pump warranty conditions including any additional conduits for low voltage signal wiring. Submitted drawings shall include the wiring and terminations for all of these relays.

D. Indicating Lights

1. Indicating Lights for general purpose applications shall be NEMA 4X, corrosion resistant as defined by NEMA ICS 6-110.58, U.L. listed, with 120 VAC LED lamp and built-in push-to-test switch, standard 30 mm diameter, with round plastic lens and miniature bayonet lamp base. Indication lights shall be Allen-Bradley 800H, or approved equal.

2. Manufacturer's standard size legend plates shall be provided and engraved to specify each light's function. The legend plate color shall be black.

3. Indicating light type and color of lens shall be as shown on the Drawings or specified in the Contract documents. Lamp color will be as follows:

a.	Opened/On	Green
b.	Closed/Off	Red
c.	Alarm	Amber
d.	Power On	White

4. Indicating lights designated "PTT" shall be provided with a push-to-test switch and wiring.

E. Elapsed Time Meters

1. Elapsed time meters (ETM) for general use shall be non-resettable with 0.0 to 99,999.9 hour readout, permanently lubricated synchronous motor drive, nominal 2-1/2” circular two-hole surface mount housing, screw terminals, and rated at 120 VAC, at 60 Hz. Elapsed time meters shall be Cramer 635, Stemco-Engler Series 210, or approved equal.

F. Circuit Breakers

1. Circuit breakers shall be of the indicating type, providing ON, OFF and TRIPPED positions of the operating handle. Circuit breakers shall be quick-make, quick-break, with a thermal-magnetic (TM) action or Motor Circuit Protectors (MCP) as shown on One-Line Diagrams. Circuit breakers feeding Soft Starters or VFDs shall have true adjustable Long, Short and Instantaneous trip units. Panelboard circuit breakers shall be the bolt-on on type. The use of tandem or dual circuit breakers in a normal single-pole space to provide the number of poles or spaces specified are not acceptable. All multiple-pole circuit breakers shall be

designed so that an overload on one pole automatically causes all poles to open. Circuit breakers and motor circuit protectors shall be manufactured by Eaton, G.E., ITE, or approved equal.

2. Where shown, circuit breakers with a frame size of 450 amperes to 1200 amperes shall be molded case with electronic microprocessor based RMS trip elements. Molded case circuit breakers with electronic trip shall be Eaton Series C N-Frame Type NG-H with Digitrip 310+ Electronic ALSIG trip unit, or approved equal. The interrupting capacity of all main, and feeder branch circuit breakers shall be a minimum of 65,000 RMS symmetrical amperes at operating voltage. Ground fault shall be provided where indicated on Contract Drawings and for all service disconnects rated 1,000 amps or more.

3. Breakers shall be sized and have a minimum interrupting capacity as shown on Drawings and as required for the supplied equipment.

4. Breakers requiring GF trip on E-Series Drawings shall be provided with breakers with integral ground fault trip.

5. Thermal magnetic circuit breakers with frames 250A and above shall be provided with removable interchangeable trip units.

6. Fused disconnects shall not be used in place of breakers.

7. Breaker for HVAC equipment shall have HACR rating.

8. Provide larger circuit breaker as required for supplied equipment at no additional cost to City.

9. All breakers shall be supplied with the correct sized copper only lugs for wire sizes as listed in “Conduit & Wire Routing Schedule”. Provide larger frame breaker or lug adapters as necessary when connecting to the listed oversized wire.

G. Control Power Transformer

1. Control power transformer shall be provided with a time-delay, slow-blow secondary fuse rated to protect the transformer and interrupt 10,000 amperes at 120VAC. Two primary fuses with KAIC interrupt rating of corresponding power connection shall be provided. Transformer size minimum ratings shall be as shown on Contract E-series drawings. When size is not shown on E-series Contract Drawings, then the following lists the minimum control power transformer per NEMA Starter size or VFD/Soft Starter size:

CONTACTOR NEMA SIZE STARTER	VFD/ SOFT STARTER AMPS	CTRL PWR XFMR VA RATING (MIN)
SIZE 00	9	150
SIZE 0	18	150
SIZE 1	27	150

CONTACTOR NEMA SIZE STARTER	VFD/ SOFT STARTER AMPS	CTRL PWR XFMR VA RATING (MIN)
SIZE 2	45	150
SIZE 3	90	250
SIZE 4	135	250
SIZE 5	270	250

2.04 DISCONNECT SWITCHES

A. Switches shall be provided with the voltage, and amperage rated as shown on the one-line and other Contract Drawings. Switches shall be provided with fuse holder with fuses sized as required by the mechanical equipment when shown on Contract drawings. All switches shall be UL labeled.

B. Switches to be stainless steel NEMA 4X rated. Equipment ground kits shall be furnished for each switch

C. The operating handle shall be capable of being padlocked in the “ON” and "OFF" positions. The operator shall be a positive, quick-make, quick-break mechanism. Disconnects shall be of the enclosed knife blade type.

D. Switches shall be provided with defeatable door interlocks that prevent the door from opening when the operating handle is in the "ON" position. Handle position shall clearly indicate whether the switch is in “ON” or “OFF”. Operating handle shall be an integral part of the enclosure frame and in no way part of the door or cover.

E. Disconnect switches shall be Square D, Eaton, or approved equal.

2.05 PULL BOXES

A. Underground pull boxes, where shown or required by length of conduit runs, shall be prefabricated concrete type with the size shown on the Drawings or larger to allow for adequate pull area. Extension sections shall be provided as necessary to reach the depth of underground conduits. All boxes shall have galvanized steel hold down bolts and hardware. Boxes located in paved areas or other areas which vehicles may travel shall be H/20 loading rated and have diamond plate steel traffic covers. Steel covers or lids shall be galvanized. Pull box covers shall be labeled with pull box designation. All underground pull boxes shall have a 12-inch bedding of ¾-inch nominal crushed rock. Pull boxes shall be Christy Concrete Products, Brooks, or approved equal.

2.06 ELECTRICAL ENCLOSURES

A. Enclosures to be NEMA rated per Indexes with fast access door latches. Enclosure construction shall be 14 gauge minimum with continuously welded seams. Outer door shall have provisions for locking enclosure with standard padlock. Provide full height white backpan.

B. Provide ground bus in each box. Ground bus shall have a minimum of 10 taps, and be rated for copper conductors.

C. All fans, vents and louvers shall be provided with removable metal filters

D. Provide larger enclosure as required to accommodate the supplied equipment at no additional cost to the City.

E. All panel doors shall be installed with ground straps.

F. Provide metal data pocket within each enclosure and box to hold as-built drawings.

G. Panels shall be provided with engraved nameplate identifying name of panel, voltage and location of power source feeding it (i.e. MCC-100, Panelboard LP-1, etc.).

H. Enclosure shall be Hoffman, Circle AW or approved equal.

PART 3 - EXECUTION

3.01 WORKMANSHIP

A. All work in this Section shall conform to the codes and standards outlined herein.

B. The Contractor shall employ personnel that are skilled and experienced in the installation and connection of all elements, equipment, devices, instruments, accessories, and assemblies. All installation labor shall be performed by qualified personnel who have had experience on similar projects. Provide first class workmanship for all installations.

C. The Contractor shall ensure that all equipment and materials fit properly in their installations.

D. The Contractor shall perform any required work to correct improper installations at no additional expense to the City.

E. The Engineer reserves the right to halt any work that is found to be substandard or being installed by unqualified personnel.

F. All cutting and notching shall be laid out carefully in advance. Do not notch any structural member or building surface without specific approval from the Engineer. Carefully carry out any cutting, channeling, chasing, or drilling of floors, walls, partitions, ceilings, paving, or other surfaces required for the installation, support, or anchorage of conduit, raceways, or other electrical materials and equipment. Following such work, restore surfaces neatly to new condition using skilled craftsmen of the trades involved. Refinish damaged surfaces to new condition using skilled craftsmen of the trades involved at no additional cost to the City.

G. Keep the premises free from accumulation of waste material or rubbish on a daily basis. Upon completion of work, remove materials, scraps, and debris from the premises and from the interior and exterior of all devices and equipment. Refinish damaged surfaces to new condition using skilled craftsmen of the trades involved at no additional cost to the City.

H. All equipment installed by the Contractor shall be in accordance with the Drawings and the manufacturer's recommendations & instructions and shall operate to the Engineer's satisfaction. Follow all manufacturers' instructions for handling, receiving, installation, and pre-check requirements prior to energization. After energization, follow manufacturer's instructions for programming, set-up and calibration of equipment. The Contractor shall be responsible for, and shall correct by repair or replacement, at his own expense, equipment that, in the opinion of the Engineer has been caused by faulty mechanical or electrical assembly by the Contractor. Necessary tests to demonstrate that

the electrical and mechanical operation of the equipment is satisfactory and meets the requirements of these Specifications shall be made by the Contractor at no additional cost to the City.

3.02 CONSTRUCTION METHODS, GENERAL

A. All field wires and panel wires shall have wire markers as specified in the “WIRE” Section.

B. All wiring shall be neatly bundled and laced with plastic tie-wraps, anchored in place by screw attached retainer. Where space is available, such as in electrical cabinets, all wiring shall be run in slotted plastic wire ways or channels with dust covers. If space is not available for wireways, then all wiring shall be neatly bundled and laced with plastic tie-wraps, anchored in place by stainless screw attached retainer. Wire ways or channels shall be sized such that the wire fill does not exceed 50%. Wires carrying 100 volts and above shall be physically separated from lower voltage wiring by using separate bundles or wireways with sufficient distance to minimize the introduction of noise, crossing only at 90 degree angles. Tie-wraps shall be T&B TY-RAP or approved equal. Proper tools shall be used to cut Ty-wraps; diagonal cutters or lineman pliers are NOT acceptable. No sharp ends shall be exposed.

C. Where wiring crosses hinged surfaces, provide a “U" shaped hinge loop protected by black or white nylon spiral wrap. The hinge loop shall be of sufficient length to permit opening and closing the door without stressing any of the terminations or connections. Spiral wrap shall be Panduit, Graybar T25N or approved equal.

D. Wireways, retainers, and other devices shall be screw mounted with round-head 316 stainless steel screws or mechanically mounted by push-in or snap-in attachments. Glue or sticky back attachment of any type or style shall not be used. Retainers shall be T&B TC series or approved equal.

E. All components associated with a particular compartment’s or enclosure's function shall be mounted in that compartment or enclosure.

F. Spacing and clearance of components shall be in accordance with UL, and NEC standards.

G. No wires shall be spliced without prior approval by the Engineer. Devices with pigtails, except lighting fixtures shall be connected at terminal blocks. Equipment delivered with spliced wires shall be rejected and the Contractor required to replace all such wiring, at no additional cost to the City.

H. Where splices are allowed or approved by the Engineer they shall conform with the following:

1. Wire splicing devices shall be sized according to Manufacturer's recommendations.

2. Splices of #10 and smaller, including fixture taps, shall be made with see-thru nylon self-insulated twist on wire joints; T & B "Piggys", Ideal "Wing-Nut" or approved equal.

3. Splices of #8 and larger shall be hex key screw two way connectors, with built in lock washers; T & B "Locktite", O-Z type XW or approved equal, insulated with 3M Scotch Super #88, Plymouth or approved equal.

4. Splices in underground pullboxes shall be insulated and moisture sealed with 3M "Scotchcast" cast resin splice kits, Plymouth splice kits, or approved equal. Do not use splice kits with a date marking for shelf life that has expired.

5. Tape on splices shall not be allowed.

6. Splices for motor leads shall be made with 3M DB series splice kit, or approved equal.

7. Where the T-leads to motors are larger than 10 AWG, Contractor shall use NSI Polaris connectors to terminate to the motor leads.

I. Tapes shall conform to the requirements of UL 510 and be rated: 105 °C, 600V, flame retardant, hot and cold weather resistant. Vinyl plastic electrical tape shall be 7 mil black. Phase tape shall be 7 mil vinyl plastic, color coded as specified. Electrical insulation putty shall be rubber based, elastic putty in tape form. Varnished cambric shall not be used.

J. Connections to terminals shall be as follows:

1. Use connector or socket type terminals furnished with component.

2. Connections to binding post screw, stud, or bolt use:

a. For #10 and smaller wire, T & B "Sta-Kon", Buchanan "Termend", or approved equal, self-insulated locking forked tongue lug.

b. For #8 to #4/0 wire, T & B "Locktite", Burndy QA, or approved equal, lug of shape best suited.

3. Use ratchet type crimping tool which does not release until proper crimp pressure has been applied.

4. Connections for all terminals shall be made with insulation stripped per manufacturer's instructions.

K. Equipment shall be wired and piped by the manufacturer or supplier. Major field modifications or changes are not allowed without the written "change order" authority by the Engineer. When field changes are made, the components, materials, wiring, labeling, and construction methods shall be identical to that of the original supplied equipment. Contractor's cost to replace or rework the equipment to match original manufacturer or supplier methods shall be done at no additional cost to the City.

L. Mating fittings, bulkhead fittings, plugs, lugs, connectors, etc. required to field interface to the equipment and panels shall be provided by the supplier when the equipment is delivered.

M. All electrical and instrumentation factory as-built drawings associated with the equipment shall be provided with the equipment when it is delivered to the job site. Drawings for each piece of equipment shall be placed in clear plastic packets of sufficient strength that will not tear or stretch from drawing removal and insertion.

N. All wire and cable lugs shall be copper; aluminum or aluminum alloy lugs shall not be allowed. The Electrical Contractor shall supply all lugs to match the quantity and size of wire listed in the Conduit & Wire Routing Schedule.

3.03 EQUIPMENT FABRICATION, GENERAL

A. Panel and enclosure cutouts for devices (i.e. indicating lights, switches) shall be cut, punched, or drilled and smoothly finished with rounded edges. Exposed metal from cutouts that are made after the final paint finish has been applied shall be touched up with a matching paint prior to installing device. Do not paint nameplates, labels, tags, switches, receptacles, conductors, etc.

B. All Panel and enclosure doors shall be fully gasketed, with non-shrinkable water and flame resistant material.

C. Bolts and screws for mounting devices on doors shall be as specified by the manufacturer, otherwise they shall have a flush head which blends into the device or door surface. No fastening devices shall project through the outer surfaces of equipment.

D. No fastening devices shall project through the outer surfaces of equipment.

E. Each component within the equipment shall be securely mounted on an interior subpanel or backpan and arranged for easy servicing, such that all adjustments and component removal can be accomplished without removing or disturbing other components. Mounting bolts and screws shall be front located for easy access and removal without special tools. Access behind the sub panel or backpan shall not be required for removing any component.

F. A ground bus shall be provided in each enclosure or cabinet. It shall have provisions for connecting a minimum of ten grounding conductors. Screw type lugs shall be provided for connection of grounding conductors. All grounding conductors shall be sized as shown on plans or in accordance with NEC Table 250.122, whichever is larger.

G. Minimum wire bending space at terminals and minimum width of wiring gutters shall comply with NEC Tables 373.6 (A) & (B).

H. Wire sizes shall not be installed smaller than those shown in NEC 310 for each circuit amperage rating.

I. Future device and component mounting space shall be provided on the door, backpan, and subpanel where detailed on the Drawings. Where no detail is shown, provide a minimum of 15 percent usable future space.

J. Doors shall swing freely a minimum of 90° and close with proper alignment.

K. All control, power, and signal wireways inside enclosures shall be run in separate plastic wireways.

L. TERMINATIONS: Single wire and cable conductors shall be terminated according to the requirements of the terminal device. All terminations must be made at terminals or terminal blocks. Use of spring or buttsplice connectors are not allowed.

1. Provide 3” minimum separation between wireway and terminal blocks. Installation of wireways too close to terminal blocks will be required to be completely reworked to the satisfaction of the City.

2. For captive screw pressure plate type terminals, the insulation shall be removed from the last 0.25 inches of the conductor. The conductors shall be inserted under the pressure plate to full length of the bare portion of the conductor and

the pressure plate tightened without excess force. No more than two conductors shall be installed in a single terminal. All strands of the conductor shall be captured under the pressure plate.

3. For screw terminals, appropriately sized locking forked spade lugs shall be used. Lugs shall be crimp on type that form gas tight connections. All crimping shall be done using a calibrated crimping tool made specifically for the lug type and size being crimped.

4. On shielded cables, the drain wire shall be covered with insulating tubing along its full bare length between the cable jacket and the terminal lug or terminal pressure plate.

5. For screwless terminals, wire shall be stripped back and inserted per the manufacturer's instructions. When stripping insulation from conductors, do not score or otherwise damage conductor.

6. Heat shrink shall be placed on ends of shielded cable to cover foil.

7. Additional condulets with wire nut shall be supplied for wire termination to devices with leads instead of terminals. (i.e. solenoid valves, level probe, etc.)

8. Terminate all status, control, and analog I/O wiring on terminal blocks, including spares. Provide additional relay, DIN rails, terminal blocks and side panels as required.

M. All devices and wiring shall be permanently labeled and secured in accordance with paragraphs NAMEPLATES AND TAGS, WIRE and CONDUITS, RACEWAYS AND WIREWAYS.

N. All components associated with a particular compartment's or enclosure's function shall be mounted in that compartment or enclosure.

O. Spacing and clearance of components shall be in accordance with UL, and NEC standards.

P. Provide metal data pocket within each enclosure and box to hold as-built drawings, including Control Panels and remote panels.

3.04 DELIVERY

A. Contractor shall inspect each electrical and instrumentation item delivered to the jobsite.

B. Contractor shall unpack each item for inspection within two (2) days of arrival.

C. Complete written inventory shall be produced by Contractor and submitted to City within (2) days after arrival on jobsite for record keeping prior to any payment for the item.

3.05 DAMAGED PRODUCTS

A. Damage products will not be accepted. All damaged products shall be replaced with new products at no additional cost to the City.

3.06 FASTENERS

A. Fasteners for securing equipment to walls, floors, and the like shall be 316 stainless steel. The minimum size fastener shall be 3/8 inch diameter. Layout to maintain headroom, neat mechanical appearance, and to support equipment loads required.

B. Reinforced concrete pad with stainless steel anchor bolts shall be provided for floor mounted electrical enclosures.

C. Anchor Methods:

1. Hollow Masonry: Sleeve type anchors.

2. Solid Masonry: Sleeve type anchors or epoxy anchors bolts.

3. Metal Surfaces: Machine screws, bolts, or welded studs.

4. Concrete Surfaces: Wedge or expansion anchors.

5. Structural Steel: Right angle, parallel and edge type rigid metal clamps. Do not weld or drill structural steel.

D. Equipment Mounting:

1. The Contractor shall be responsible for furnishing and setting all anchor bolts required to install his equipment.

2. Electrical equipment shall be unistrut "stand off" mounted a minimum of ½ - inch from the wall in a manner so that the rear of the equipment is freely exposed to air circulation. Unistrut material shall be stainless steel in NEMA 4X areas and galvanized in non-NEMA 4X areas unless called out specifically in details.

3. All equipment enclosures shall be of the NEMA classification noted on the electrical plan Drawings for the area in which the device will be mounted.

4. Reinforced concrete pad with stainless steel anchor bolts shall be provided for each electrical freestanding equipment.

E. Dissimilar metals such as aluminum, stainless steel, steel, galvanized steel between enclosures, devices, etc. and mounting surfaces shall be isolated from each other using insulated tape or nonmetal spacers. Tape and spacers used shall be specifically manufactured for this application.

3.07 INSTALLATION, GENERAL

A. System:

1. Install all products per manufacturer's recommendations and the Drawings.

2. Provide all necessary hardware, conduit, wiring, fittings, and devices to connect the electrical equipment provided under other Sections. The following shall be done by the Contractor at no additional cost to the City:

a. Provide additional devices, wiring, conduits, relays, signal converters, isolators to complete interfaces of the electrical and instrumentation system.

b. Changing normally open contacts to normally closed contacts or vice versa.

c. Adding additional relays to provide more contacts as necessary.

d. Installing additional terminal blocks to land wires.

e. Provide larger circuit breakers, conduit and wire, as required for the horsepower of the supplied equipment, when the supplied equipment is larger than that specified, at no additional cost to the City.

f. Provide larger motor termination boxes and lugs as required to accommodate conduit and wires. Provide lug adaptors as required to provide terminations between wire specified and lugs of equipment to be connected to.

g. Other work implied by contract documents.

3. All programmable devices shall be programmed, set-up and tested by the Contractor prior to startup. This includes PLC, OI, and transmitters. Programming and set-up parameters shall be adjusted or changed as directed by the City or Engineer during start-up and throughout the warranty period, at no additional cost to the City.

4. Coordinate with the City and setup all alarm, process, and operation setpoints.

5. Keep a copy of the manufacturer's installation instructions on the jobsite available for review at all times prior to and during any installation of the associated equipment.

B. Panels and enclosures:

1. Install panels and enclosures at the location shown on the Plans or approved by the Engineer.

2. Install level and plumb.

3. Provide larger motor termination boxes as required to accommodate conduit and wires.

4. Seal all enclosure openings to prevent entrance of insects and rodents.

5. All conduits entering outdoor panels and enclosures shall use watertight hubs. These hubs shall be located on sides or bottom only. Top entry of outdoor panels or enclosures is not allowed.

6. Clearance about electrical equipment shall meet the minimum requirements of NEC 110.26 and manufacturer's instructions.

7. Additional condulets with terminal blocks shall be supplied for wire termination to devices with leads instead of terminals. (i.e. solenoid valves, level probe, etc.)

8. Terminate all status, control, and analog I/O wiring on terminal blocks, including spares. Provide additional relay, DIN rails, terminal blocks and side panels as required.

9. A ground bus shall be provided in each enclosure or cabinet. It shall have provisions for connecting a minimum of ten grounding conductors. Screw type lugs shall be provided for connection of grounding conductors. All grounding conductors shall be sized as shown on plans or in accordance with NEC Table 250.122, whichever is larger.

10. All panels and enclosures be delivered with as-built drawings in clear plastic packets within each panel and enclosure.

C. Conduits and Ducts:

1. Install all conduits and ducts per 16110 - Conduit, Boxes & Grounding.

D. Wiring, Grounding, and Shielding:

1. Wiring inside and outside equipment shall be installed per Section 16120.

2. It is important to observe good grounding and shielding practices in the generally noisy environment in this application. The shield of shielded cables shall be terminated to ground at one end only, the control panel end. The shield at the other end shall be encased in an insulated heat shrink material to isolate it from ground. Heat shrink shall be placed on ends of shielded cable to cover foil.

3. Special cables shall be provided when required by manufacturer or necessary to correct noise or distortion interference at no additional cost to City.

4. Field wiring shall not begin until interconnection drawings have been submitted by the Contractor and approved by the Engineer, as specified herein.

E. Cutting and Patching:

1. The Contractor shall do all cutting and patching required to install his work. Any cutting which may impair the structure shall require prior approval by the Engineer. Cutting and patching shall be done only by skilled labor of the respective trades. All surfaces shall be restored to their original condition after cutting and patching.

F. Seals:

1. Seal around all conduits, wires, and cables penetrating between electrical panels, walls, ceilings, and floors in all buildings with a fire stop material. Seal shall be made at both ends of the conduit with a fire stop putty. Seal shall have a minimum two hour rating. Fire stop sealing shall be International Protective Coatings Flamesafe, or approved equal.

2. Seal around conduits entering outside to inside structures and around bottom of free standing enclosures to maintain watertight integrity of structure.

3. Place conduit seal inside each underground conduit riser into panels and enclosures to prevent entrance of insects and rodents.

4. Seal each conduit entrance from below grade into the panel and other electrical enclosures with plugging compound sealant to prevent the entrance of insects and rodents. Conduits between the enclosures shall be sealed with plugging compound sealant on each end. Plugging compound sealant shall be PRC-DeSoto (formerly Courtaulds) Aerospace Semco PR-868 or approved equal.

5. Seal conduits entering any electrical instrument. Install conduit drain boxes and plug conduit interior to form an effective barrier to keep out water traveling into equipment or instrumentation from conduit installed higher than equipment or instrumentation.

G. Housekeeping Pads:

1. Concrete housekeeping pads are required for all free standing electrical equipment. Housekeeping pads shall be 3-1/2" inches above surrounding finished floor or grade unless otherwise shown and shall be 3 (minimum) inches larger in width and depth around equipment. Housekeeping pads shall be installed for future units as shown on the Contract Drawings.

2. Housekeeping pad shall be high quality concrete with rebar woven into floor rebar network. Concrete shall be precisely leveled so that equipment set in place will not require shimming.

3. Housekeeping pad shall be Class "A" concrete with rebar crossway network. The minimum size rebar allowed is #3. Concrete shall be precisely leveled so that equipment set in place will not require shimming.

H. Cleaning and Touch up:

1. Prior to energizing the device initially and a second time immediately prior to final acceptance all parts of the installation, all equipment, exposed conduit, and fittings, shall be thoroughly cleaned of and given touch-up by Contractor as follows:

a. Remove all grease and metal cuttings.

b. Any discoloration or other damage to parts of the building, the finish, or the furnishings, shall be repaired.

c. Thoroughly clean any of his exposed work requiring same.

d. Vacuum and clean the inside of all panels, motor control centers, panelboards, junction boxes and other enclosures supplied under this

project containing electrical equipment to remove all dirt, metal chips, stripped insulation, etc., from the enclosure.

e. Clean all above and below ground pull boxes, junction boxes, and vaults from all foreign debris prior to final acceptance.

f. Special "Soft–Jaw" type pipe clamps shall be used to prevent damage to PVC-coated conduit while field threading and cutting to length.

g. Paint all scratched or blemished surfaces with the necessary coats of quick drying paint to match existing color, texture and thickness. This shall include all prime painted electrical equipment including but not limited to enclosures, poles, boxes, devices etc.

h. Remove all decals and lettering from both sides of support plates.

i. Repair damage to factory finishes with repair products recommended by Manufacturer.

j. Repair damage to PVC or paint finishes with matching touchup coating recommended by Manufacturer.

3.08 SAFETY LOCKOUTS

A. Contractor shall provide safety lockout tags on the breakers for all switchboards, MCCs and panelboards and other electrical enclosures. Safety tags shall not be the same as those used by the City. All padlocks used for this purpose shall be keyed differently from any of the City's padlocks. Padlocks shall remain in place by the Contractor until operation of the portion of work is turned over to the City with the responsibilities noted on the acceptance form.

B. The following is the procedure for transferring each portion of work over to the City prior to completion of the entire project:

1. Contractor shall inform the City when a portion of the work is complete, ready for inspection and available to be placed into operation.

2. The City will schedule the inspection and substantiate that the work is complete and operational.

3. The Contractor will correct any deficiencies.

4. The City will prepare a Partial Utilization form in which that portion of the project will be turned over the City with the responsibilities noted on the acceptance form. The Contractor then shall remove his safety lockouts and tags.

C. Safety lockout tags shall be rigid vinyl with write-on surface and brass grommet. Safety tags shall be secured in place with cord of sufficient strength to prevent accidental removal or displacement. Safety lockout tags shall be Panduit Write-on Safety Tags, model PVT-98 or approved equal.

3.09 OPERATION AND MAINTENANCE MANUALS

A. Provide Operation and maintenance manuals bound in a three ring binder with one set made up completely with original manuals per this subsection & Section 01300. O&M shall contain the following as a minimum:

1. A comprehensive index in each volume for all volumes.

2. A complete "Record" set of favorably reviewed electrical submittals as provided under subsection Submittal and Drawing Requirements. Include as-built one-line, elevation, loop, elementary and interconnection drawings.

3. A complete list of the equipment supplied, including serial numbers, ranges, catalog cuts, and pertinent data.

4. Full specifications on each item.

5. Detailed service, maintenance and operation instructions for each item supplied. Schematic diagrams of all electronic devices shall be included. A complete parts lists with stock numbers shall be provided on the components that make up the assembly. All of these shall be originals, no copies.

6. Record of the following:

   a. Each motor starter including manufacturer, full part number, size, etc.

   b. Overload heater element including manufacturer, full part number, size, etc.

   c. Each breaker and overload heater element including manufacturer, full part number, size, setting etc.

7. Safety precautions and procedures.

8. Special maintenance requirements particular to this system shall be clearly defined, along with special calibration and test procedures.

9. Complete listing of as-built PLC setup and programming listings and OI graphic documentation.

10. Spread sheet listing all setpoints and programmable parameters entered for this project for VFD, PLC application program, all instrumentation and transmitters, etc.

11. Include all completed and signed test data and forms from factory and field testing.

12. No photo copies are allowed of standard published manuals available from manufacturers, such as for the VFD. All of the manuals shall be originals.

13. Factory & Field test results.

14. Warranty certificate with start dates, duration and contact information.

15. Troubleshooting instructions.

16. Record of all settings or parameters for all programmable devices.

B. At the end of the project these manuals shall be updated to show "as-built" conditions.

C. Provide to the City four (4) each USB drives with lanyards and two sets of CDs (CDs shall contain all documents in both PDF format and unlocked AutoCAD - DWG format, version 2010 or later):

1. As-built Contract electrical and instrumentation drawings prepared for this project.

2. As-built sets of other computer generated documents prepared for this project, and Bill of Materials prepared for this project.

   a. As-installed software VFD/ SSS configuration settings.

3. Electronic PDF version of O&M manual. Version format shall follow the hard copy submittal of the O&M, including index, equipment record sheet, warranty information, theory of operation, maintenance instruction, etc. PDF shall be “bookmarked” at each index, subtab, transmittal letter, equipment record sheet, warranty information, theory of operation, maintenance instruction, etc. Failure to bookmark PDF may be grounds for immediate rejection without review. Bookmarks shall be descriptive of actual document, tab, etc. Bookmarks shall not be out of order; the English description shall match that listed in the Submittal’s Table of Contents.

4. These files shall be the property of the City, for its use on this and future projects.

5. Label drives with site name using with clear plastic with black machine printed lettering as produced by a KROY or similar machine. The size of the nameplate tape shall be with 3/8-inch lettering unless otherwise approved by the Engineer. Securely fasten nameplates in place on the USB drive using the adhesion of the tape.

3.10 TESTING

A. GENERAL REQUIREMENTS

1. It is the intent of these tests to assure that all equipment is operational within industry and manufacturer's tolerances and is installed in accordance with design plans and specifications.

2. All equipment setup and assembled by the Contractor shall be in accordance with the design plans and Drawings and the manufacturer's recommendations and

instructions and shall operate to the Engineer's satisfaction. Follow all manufacturer's instructions for handling, receiving, installation, and pre-check requirements prior to energization. After energization, follow manufacturer's instructions for programming, set-up and calibration of equipment. The Contractor shall be responsible for, and shall correct by repair or replacement, at his own expense, equipment which, in the opinion of the Engineer, has been caused by faulty mechanical or electrical assembly by the Contractor. Necessary tests to demonstrate that the electrical and mechanical operation of the equipment is satisfactory and meets the requirements of these Specifications shall be made by the Contractor at no additional cost to the City.

3. The testing shall not be started until the manufacturer has completed fabrication, wiring, and setup; performed satisfactory checks and adjustments; and can demonstrate the system is complete and operational. Certification of completion of Contractor's in-house tests shall be submitted prior to scheduling of factory testing.

4. Factory tests shall not be scheduled until submittals associated with the equipment have been approved by the Engineer.

    a. If equipment is significantly different from submittal drawings, this shall be grounds for cancellation and rescheduling of factory tests at no additional costs to City or extension of Contract time.

    b. Engineer reserves the right to postpone the factory test, at no additional cost to the City, until the submittal associated with the factory test has been reviewed by the Engineer and marked "No Exceptions Taken" or "Make Corrections Noted." No extension of Contract time will be allowed.

5. All tests shall be witnessed by the Engineer and/or City personnel. The test forms shall be completed by the testing person for field checkout, testing, and calibration of all equipment and instruments. All filled in test forms shall be given to the Engineer and/or City the day of the test. Fill in two sets of test forms if Contractor wants to keep a copy. All tests shall be documented in writing by the supplier and signed by the Engineer as satisfactory completed. The supplier shall keep a detailed log of all tests that failed or did not meet specifications, including date of occurrence and correction. Completed forms with proper signatures and dates shall be included and become a component of the Operations and Maintenance Manual for each of the respective systems.

6. The Contractor shall notify the City and the Engineer of the Supplier's readiness to begin all factory and field tests in writing (a minimum of ten working days prior to start), and shall schedule system checkout on dates agreed to by the City and the Engineer in order that the testing be scheduled and witnessed.

7. The Contractor shall fill in & submit for approval the "Scheduled Test Request Form" located in Appendix "A" for each requested inspection, factory and field test.

8. Separate test procedure in separate binders shall be submitted for approval for the Factory, Pre-Energization Field Tests and Powered Field Tests at least two weeks prior to the start of the tests. Testing shall not commence until the test procedures have been reviewed and approved by the City. Test forms shall be provided as illustrated in Appendix "A". Each testing sheet shall have a title giving the type of test and entry spaces for the name of the person who performed the test, name of the person who witnessed the test, and the date.

9. Test equipment used for testing shall be of suitable quality so as not to mask performance deficiencies. All test equipment shall be traceable to National Bureau of Standards and have been calibrated within six months of test date.

10. The first set of tests to be performed shall determine the suitability for energization and shall be completed with all power turned off.

B. Failure To Meet Test

1. Any system material or workmanship which is found defective on the basis of acceptance tests shall be reported to the Engineer. The Contractor shall replace the defective material or equipment and have tests repeated until test proves satisfactory to the Engineer without additional cost to the City.

2. If the results of any of tests are unacceptable to the Engineer, the Contractor shall make corrections and perform the tests again until they are acceptable to the Engineer; these additional tests shall be done at no additional cost to the City.

3. If testing, installation or configuration work performed is deemed inadequate by City or Engineer, then the Contractor shall provide a qualified technician to meet these requirements. No extension of Contract time will be allowed.

4. If the "system setup" is found to be not fully and completely ready for factory testing by the City Representative, the Contractor shall be responsible for paying for the City and Engineer to return for the factory testing. Factory testing is to ensure that there are no defects. The hardware and software shall be tested for compliance with the plans and Specifications included herein and for the ability to perform the control functions.

C. Safety

1. Testing shall conform to the respective manufacturer's recommendations. All manufacturers' safety precautions shall be followed.

2. The procedures stated herein are guidelines for the intended tests, the Contractor shall be responsible to modify these tests to fit the particular application and ensure personnel safety. Absolutely no tests shall be performed that endanger personal safety.

3. The Contractor shall have two or more personnel present at all tests.

4. Two non-licensed portable radios are to be made available by the Contractor for the Contractor to conduct tests.

5. California Electrical Safety Orders (ESO) and Occupational Safety and Health Act (OSHA): The Contractor is cautioned that testing and equipment shall comply with ESO and OSHA as to safety, clearances, padlocks and barriers around electrical equipment energized during testing.

6. Field inspections and pre-energization tests shall be completed prior to applying power.

D. Electrical Factory Tests

1. The System supplier shall conduct a thorough and complete factory test by qualified factory-trained personnel witnessed by City per the criteria specified herein. Factory test shall be held within 150 miles of project location.

2. The "system set-up" for testing shall consists of, but is not limited to:

   a. Switchboards

   b. Generator Termination Box

   c. Main Switchboard B (MCC)

   d. PLC Control Panel

   e. Sunshields

   f. Disconnect Switches

   g. VFDs

   h. Any miscellaneous associated electrical equipment.

   i. All control components shall be installed and PLCs programmed with full functional logic.

3. Temporary wiring and equipment shall be setup during these tests to simulate the complete assembled system.

4. The length of the factory testing for the system setup shall be a minimum of two (2) working day (8 hours per day). If in the opinion of the City or Engineer the factory testing is not completed at the end of the working day, the testing shall be extended, at no additional cost to the City or extension in Contract time. The Contractor shall agree that the sum set forth hereafter is a reasonable amount to be charged as liquidated damages; and it is therefore agreed that the Contractor will pay the City the sum of one thousand-five hundred dollars ($1500.00) in liquidated damages for each and every calendar day beyond the time prescribed above for the completion of factory testing for the system setup.

Liquidated damages will be assessed to the Contractor each and every day past the time allotted for factory testing.

5. All factory tests shall be conducted at the Supplier's facility. All factory tests shall be completed prior to shipment of any of the "system setup" to the jobsite. The "system setup" shall be fully assembled, programmed and connected as it will be installed in the final configuration. If the "system setup" is found to be not fully and completely ready for factory testing, the Contractor shall be responsible for paying for the City and Engineer to return for the factory testing. Factory testing is to ensure that there are no defects. The hardware and software shall be tested for compliance with the plans and Specifications included herein and for the ability to perform the control functions.

6. All components of the system setup shall be completely assembled and thoroughly pre-tested by the supplier or manufacturer before start of factory test.

7. The testing shall not be started until the manufacturer has completed fabrication, wiring, setup, and programming; performed satisfactory checks and adjustments; factory testing sheets approved by City; and can demonstrate the system is complete and operational.

8. Provide a complete clean copy of System Supplier drawings for City and Engineer's use during Factory Test. These drawings shall reflect the equipment being tested. If City Representative determines that these drawings do not adequately reflect the actual equipment being tested or differs substantially from the approved equipment submittal, the City Representative reserves the right to cancel the Factory Test as the equipment is found to be not fully and completely ready for factory testing. Equipment that differs substantially from the approved equipment submittal shall be resubmitted. Factory test will be rescheduled after revised submittals have been reviewed by the Engineer and marked "No Exceptions Taken" or "Make Corrections Noted". No extension of Contract time will be allowed. Cancellation and rescheduling of factory tests shall occur at no additional costs to City.

9. Factory testing sheets shall be provided by System Supplier and submitted for approval. Factory testing sheets shall contain the following:

    a. A separate set of factory testing sheets for all defined "PLC I/O" that includes:

        1) A list of all PLC I/O tag names with description sorted by type (analog input, analog output, digital input, and digital output) shown on Contract I-Series Drawings.

        2) Predefined column entry spaces adjacent to each tag name for logging the result of the test as failed or passed, comments, and date of corrective action (used when test failed initially, and problem subsequently corrected to pass test).

3) For "analog input" blocks provide column entry spaces for the simulated test values (i.e., 1, 3, and 5 VDC) and displayed test value responses (i.e., 0, 50, and 100% of engineering units span).

b. A separate set of "alarm" factory testing sheets for all defined alarms that includes:

1) A list of all alarm names.

2) Predefined column entry spaces adjacent to each cell for logging the result of the test as failed or passed, comments, and date of corrective action (used when test failed initially, and problem subsequently corrected to pass test).

10. The associated factory tests for each of the factory testing sheets that are to be performed by the supplier and witnessed by the City Engineer shall include the following system setup as a minimum:

a. Testing of the “system set-up” as follows:

1) Vacuum and clean the inside of all MCC and electrical and instrumentation enclosures prior to start of factory test.

2) Inspections - Visual and mechanical

a) Inspect for physical damage, proper support, and wiring.

b) Check all starters, breakers, and other components for proper sizes.

c) Compare equipment nameplate data with design one line diagrams.

d) Complete test form TF4 located in Appendix “A”.

b. Testing of Control as follows:

1) To facilitate testing and system simulation of the “System Set-up”, the Supplier shall connect a separate toggle two position on-off switch to each status and alarm digital input. Three digital multi-meters (minimum +/- 0.2% accuracy) with clip-on leads shall be supplied and utilized during testing for measurement of digital and analog outputs. The supplier shall use simulated input signals to replicate varying field device signals during the factory tests in order to verify the proper functioning of hardware and software.

c. Testing of Control and Programming:

1) The system set-up for factory testing consists of, but is not limited to, MCCs completely wired, PLC interfaces connected and fully programmed, power monitor, fiber modules, fiber optic link between fiber modules and any miscellaneous equipment associated with the MCC system all assembled in enclosures as that of the final installation.

2) To facilitate testing and system simulation, the Supplier shall connect a separate toggle two position on-off switch to each status and alarm digital input. In addition, a power supply and a separate potentiometer which produces a variable 0 to 5 VDC or 4-20mA signal shall be connected to each analog input. Three digital multimeters, (minimum +/- 0.2% accuracy) with clip-on leads, shall be supplied and utilized during testing for measurement of digital and analog outputs. The supplier shall use simulated input signals to replicate varying field device signals during the factory tests in order to verify the proper functioning of hardware and software.

3) The structured factory tests to be performed by the System Supplier and witnessed by the City shall include the following as a minimum:

   a) Control Checkout Tests: Simulate the digital or analog signals (or combination thereof) at the MCC field terminals using the test hardware to verify that each control is functional and properly configured. Verify that all parameters (i.e., relay logic operations, relay timing, controller setpoints, etc.) of the control system are defined and operate according to the design documents. Each line of control logic on the elementary and loop diagrams shall be checked. After a line of control logic is tested, the person performing test shall initial the corresponding line on the elementary or loop diagram. When the complete elementary or loop diagram has been checked, it shall be signed and dated by testing person and person witnessing test.

   b) Alarm Checkout Tests: Simulate the digital or analog signals (or combination thereof) at the MCCs using the test hardware to verify that each PLC I/O point is functional and properly configured. Verify that all parameters (i.e., description, engineering units, span, enable/disable, setpoints, runtimes, totalization, logic type, etc.) of the alarms are defined and operate according to the Specifications. Multiple alarm states (i.e., LO, LO-LO, HI, HI-HI, etc.) shall be checked by varying the input signal.

   c) PLC Program Tests: Each line of control shall be checked. After a line of control logic is tested, the person performing test shall initial the corresponding line on the control strategy. When the complete control strategy has been checked, it shall be signed and dated by testing person and person witnessing test.

4) Unstructured factory tests are required as part of the factory testing phase. These additional tests shall include any and all unstructured tests as directed by the City or Engineer. The

various unstructured tests shall include, but are not limited to, the following:

a) Verify the correct inventory of hardware, etc. All spare parts shall be included in the inventory.

b) Simulate the equipment failure and power fail/restart of PLC. Check the effects of each failure on maintaining operations with the remaining equipment.

c) The factory tests, as a minimum, shall simulate all normal and abnormal operating conditions, including steady state, change of state, variable changes, fluctuations, transients, upsets, start-up, shutdown, power failure, and equipment failure conditions.

d) Verification of proper scanning, collection rate, update refresh, and data acquisition of all status, alarm, and data points from all PLCs.

e) Measure and test all power supplies for correct voltage. Operate UPS under its own power to test UPS run duration and alarms.

f) Spare parts for the system shall also be tested during this test period. The System Supplier shall prove by temporarily connecting the spare hardware to the system that any or all of the spare parts function in a manner equivalent to the original equipment under test.

11. The factory test will be considered complete only when the integrated system has successfully passed all tests to the satisfaction of the City or Engineer. No electrical equipment shall be shipped to jobsite without authorization from the City or Engineer that the factory test has been completed. Equipment that were shipped to the jobsite without authorization shall be shipped back to the System Supplier for witness testing at no additional cost to City.

12. Acceptance and witnessing of the factory tests does not relieve or exclude the Contractor from conforming to the requirements of the Contract Documents.

13. The testing personnel shall provide all material, equipment, labor and technical supervision to perform such tests and inspections.

14. During the testing period, under the supervision of the supplier, the Engineer and other City personnel shall have unlimited and unrestricted access to the usage and testing of all hardware and software in the system.

15. Spare parts for the system shall also be tested during this test period. The supplier shall prove by temporarily connecting the spare hardware to the system that any or all of the spare parts function in a manner equivalent to the original equipment under test.

16. The System Supplier shall pay all expenses incurred by his personnel who includes labor, material, transportation, lodging, daily subsistence, and other associated incidental costs during the factory testing.

17. Faulty and/or incorrect hardware operation of major portions of the system may, at the discretion of the City Engineer, be cause for suspension or restarting of the entire factory test, at no additional cost to the City or extension in contract time.

18. The factory test will be considered complete only when the system setup has successfully passed all tests both structured and unstructured to the satisfaction of the City Engineer. No equipment shall be installed without authorization from the City Engineer that the factory test has been completed.

19. All modifications to drawings and documentation as a result of the factory tests shall be corrected and completed before shipment of drawings with equipment and the submittal and delivery of "operation and maintenance" manuals.

20. Copies of the completed and witnessed factory testing forms shall be placed in the Operation and Maintenance Manual.

E. ELECTRICAL FIELD TESTS

1. Prior to any field testing, Interconnection Drawings and Operation & Maintenance Manuals shall have been submitted by the Contractor and approved by the Engineer.

2. The Electrical Contractor shall engage and pay for the services of an approved qualified testing company for the purpose of performing inspections and tests as herein specified. The testing company shall provide all material, equipment, labor and technical supervision to perform such tests and inspections.

3. The Electrical Contractor shall complete and submit "Schedule Test Request Form" as illustrated in Appendix "A" for each electrical field test.

4. The Electrical Contractor shall be at the jobsite to assist with all Electrical Field Tests.

5. The all test forms shall list all test equipment used to perform calibration and date of last calibration.

6. Pre-Energization Tests: These tests shall be completed prior to applying power to any equipment:

    a. Field Inspections

        1) Inspect for physical damage, proper anchorage, and grounding.

        2) Compare equipment nameplate data with design plans and starter schedule.

3) Compare overload setting with motor full load current for proper size.

4) The Contractor shall fill in, for each piece of equipment, Test Form TF4 located in Appendix "A."

b. Torque Connections

1) All electrical, mechanical and structural threaded connections inside equipment shall be tightened in the field after all wiring connections have been completed. Every worker tightening screwed or bolted connections shall be required to have and utilize a torque screwdriver/wrench at all times. Torque connections to the value recommended by the equipment manufacturer. If they are not available, use NEC Annex I as guidelines.

c. Wire Insulation & Continuity Tests

1) All devices that are not rated to withstand the 500V megger potential shall be disconnected prior to the megger tests.

2) Megger insulation resistances of all 600 volt insulated conductors using a 500 volt megger for ten seconds. Make tests with circuits installed in conduit and isolated from source and load. Each conductor shall be meggered conductor to conductor and conductor to ground. These tests shall be made on cable after installation with all splices made up and terminators installed but not connected to the equipment.

3) Each megger reading shall not be less than 10 Meg-ohms resistive. Corrective action shall be taken if values are recorded less than 10 Meg-ohms. Values of different phases of conductors in the same conduit run showing substantially different Meg-ohm values, even if showing above 10 Meg-ohms shall be replaced.

4) Each instrumentation conductor twisted shielded pair shall have the conductor and shield continuity measured with an ohmmeter. Conductors with high ohm values, that do not match similar lengths of conductors the same size, shall be replaced at no additional cost to the City.

5) The Contractor shall fill in test forms Power and Control Conductor Test Form TF1 and Instrumentation Conductor Test Form TF2 located in Appendix "A."

d. Grounding System Tests

1) Visual and Mechanical Inspection

a) Verify ground system is in compliance with drawings and specifications.

2) Electrical Tests

a) Before making connections to the ground electrodes, and before placement of sidewalks, landscape and paving, measure the resistance of each electrode to ground using a ground resistance tester. Perform the test not less than two days after the most recent rainfall and in the afternoon after any ground condensation (dew) has evaporated.

b) After all individual ground electrode readings have been made, interconnect as required and measure the system's ground resistance.

c) Perform point-to-point tests to determine the resistance between the main grounding system and all major electrical equipment frames, system neutral, and/or derived neutral points.

d) The grounding test shall be in conformance with IEEE Standard 81.

e) Plots of ground resistance shall be made and submitted to the Engineer for approval.

f) The current reference rod shall be driven at least 100 feet from the system under test.

g) Measurements shall be made at 10 feet intervals beginning 25 feet from the test electrode and ending 75 feet from it in a direct line between the system being tested and the test electrode.

h) The resistance between the main grounding electrode and ground shall be no greater than five ohms for commercial or industrial systems for generating or transmission station grounds per IEEE Standard 142.

3) Test Values

a) Investigate point-to-point resistance values that exceed 0.5 ohms.

b) The Contractor shall fill in Grounding System Test Form TF3 located in Appendix “A.”

e. Panelboard Test

1) Visual and Mechanical Inspection:

a) Inspect for physical damage, proper anchorage and grounding.

b) Compare equipment nameplate data with design plans and starter schedule.

2) The Contractor shall fill in Panelboard Test Form TF5 located in Appendix “A.”

7. Post Energization Tests

a. MCC Control System Tests

1) Component Tests

a) Measure insulation resistance of starter phase to phase and phase to ground with the starter contacts closed and the protective device open. Test voltage and minimum acceptable values shall conform to NETA Section 3 "Test Values." Measure insulation resistance of each control circuit with respect to ground.

b) Motor overload units shall be tested by injecting primary current through overload unit and monitoring trip time.

c) Test the motor circuit protectors and thermal breakers as specified herein.

2) Control Tests

a) Remove motor overload heaters from each motor starter or disconnect pump/motor coupling. In case the motor overload heaters are fed by current transformers, the motor conductors shall be removed and insulated away from the load lugs of the motor starter.

b) Verify the pump control circuits are wired and operate as shown on the elementary diagrams. Check the indicator lights, alarm lights, local & remote selector switches, alarm contacts, power fail relays, overloads, etc., for proper operation.

c) Reinstall all heaters and all wiring removed for this test.

3) The Contractor shall fill in Operational Device Checks and Tests Form TF6 and MCC Device Test Form TF8 located in Appendix “A.”

b. Breaker Test

1) All MCPs and breakers shall be checked for proper mounting, conductor size, and feeder designation. Operate circuit breaker to ensure smooth operation. Inspect case for cracks or other defects. Check tightness of connection with torque wrench in accordance with manufacturer's recommendations.

2) All Thermal magnetic (TM) breakers 100 amps and above shall be tested. Time current characteristic tests shall be performed bypassing three hundred percent (300%) rated current through each pole separately. Trip time and amps shall be determined. Instantaneous pickup current shall be determined by run up or pulse method. Clearing times should be within four (4) cycles or less. At end of test the thermal breakers shall be set by Contractor for proper coordination.

3) All MCPs breakers shall be tested by current injection method. Time current characteristic tests shall be performed bypassing rated current of trip setting value through each pole separately. At end of test the MCP breakers shall be set by Contractor to the proper multiple of the full load motor amp.

4) The ground fault protection system shall be performance tested when first installed on site per NEC 230.95(C). The test shall be conducted per manufacturer's instructions.

5) Contact and Insulation Resistance: Contact resistance shall be measured and be compared to adjacent poles and similar breakers. Deviations of more than 50% shall be reported to Engineer. Insulation resistance shall be measured and shall not be less than 50 megohms. All trip times shall fall within NETA Table values. Instantaneous pickup current levels should be within 20% of manufacturer's published values.

6) The Contractor shall fill in MCC Device Test Form TF8 and Breaker Test Form TF9 located in Appendix "A."

c. Phase Rotation Tests

1) Check connections to all equipment for proper phase relationship. During this test, disconnect all devices which could be damaged by the application of voltage or reversed phase sequence. Three phase equipment shall be tested for the phase sequence "ABC" front to back, left to right, and top to bottom.

2) All three phase motors shall be tested for proper phase rotation. Revise wire color codes to indicate correct phase color if wires are swapped.

3) The Contractor shall fill in Phase Rotation Test Form TF7 located in Appendix "A."

d. Motor Testing

1) Record the amperage draw on all phases of each motor operating under full load. Ensure that these values do not exceed the motor nameplate full load amperage.

2) Record the voltage between all phases of each motor operating under full load. If the voltage balance is not within plus or minus 5 percent of nominal, request the Utility power company or other responsible party to correct the problem.

3) The Contractor shall compile, by visual inspection of equipment installed for each motor, the following data in neatly tabulated form and be placed in the O&M manual:

a) Equipment driven.

b) Motor horsepower.

c) Nameplate amperes.

d) Service factor.

e) Temperature rating.

f) Overload catalog number.

g) Overload current range and setting.

h) Circuit breaker rating.

i) Circuit breaker trip setting, for magnetic only circuit breakers.

4) The Contractor shall fill in Motor Test Form TF10 located in Appendix "A."

e. Control System Tests

1) All the new I/O points for the PLC shall be tested by the supplier in the field for proper operation of alarms, status, analog, control, and operator display functions. Each of the control strategies shall be tested and demonstrated to City for compliance by the System Supplier. Testing shall be accomplished using simulated inputs only with prior written approval of the City.

2) All the I/O points for the PLC shall be tested by the City with assistance from Contractor for proper panel wiring. Where practical, the final element shall be used, i.e., trip the intrusion switch or change levels. During this task the Contractor shall have:

a) Qualified field technician with experience in the startup of similar systems to operate the PLC and other field devices.

b) Test instruments as required.

c) A pair of radios for communication.

3) Electrical Tests:

a) Perform operational tests by initiating control devices to affect proper operation.

4) The Contractor shall fill in "I/O point Checkout Test Sheet" TF13 located in Appendix "A."

f. Instrumentation Tests:

1) Instrumentation tests shall be conducted per the following criteria: As a minimum, all the tests indicated/specified on the test form TF14 in Appendix "A" shall be performed by the Contractor for each of the instruments listed in Section 16940 – Instrumentation. The overall accuracy of each instrument loop shall be checked to ensure that it is within acceptable tolerance.

2) Calibration stickers shall be supplied for all equipment and instruments. Calibration stickers shall list the following information:

a) Tag number.

b) Calibrated by whom (name), firm, city and telephone number.

c) Date calibrated.

d) Calibration range.

e) Comments.

3) The Contractor shall provide a minimum of two (2) hours of field acceptance testing for each instrument. If any instrument has not been fully tested during its allotted time, the Contractor shall provide additional hours for finishing testing of the instrument, to be paid by the Contractor.

g. Program Parameter Record:

1) The Contractor shall fill in "VFD" or Soft Starter "SSS" Program Parameter Record Sheet" TF16 for each VFD/SSS provided on this project. These parameter record sheets shall be filled out by a qualified System Supplier field technician when power in field is first applied to each VFD/SSS. Completion of VFD/SSS record sheets shall be witnessed by City and copies proved to City on day records are filled in by Contractor. A copy of all completed VFD/SSS parameter record sheets shall be placed in O&M manual.

h. VFD measurement and tests:

1) Measure the voltage and current 5th, 7th, 9th, 11th harmonics at the load side of the ATS with a harmonic analyzer with the each combination of pumps or as designated by City at start-up in operation on the utility source and Generator source. Measure and record the results, per the Harmonic Measurements Test Form TF12.

F. Fiber Tests:

1. Fiber Testing shall be performed prior to Energized Tests

2. Fiber Optic Standards

a. Fiber Optic Installation: field test requirements.

1) Provide all labor, materials, tools, field-test instruments and equipment required for the complete testing, identification and administration of the work called for in the Contract Documents.

2) In addition to the tests detailed in this document, the contractor shall notify the City or the City's representative of any additional tests that are deemed necessary to guarantee a fully functional system. The contractor shall carry out and record any additional measurement results at no additional charge.

3) Testing shall be carried out in accordance with this document. This includes testing the attenuation and polarity of the installed

cable plant with an optical loss test set (OLTS) and the installed condition of the cabling system and its components with an optical time domain reflectometer (OTDR). The condition of the fiber endfaces shall also be verified.

4) Testing shall be performed on each cabling link (connector to connector).

5) Testing shall be performed on each cabling channel (equipment to equipment) that is identified by the City.

a) Testing shall not include any active devices or passive devices within the link or channel other than cable, connectors, and splices, i.e. link attenuation does not include such devices as optical bypass switches, couplers, repeaters, or optical amplifiers.

6) All tests shall be documented including OLTS dual wavelength attenuation measurements for multimode and singlemode links and channels and OTDR traces and event tables for multimode and singlemode links and channels.

a) Optionally documentation shall also include optical length measurements and pictures of the connector endface.

3. Fiber Optic Performance Testing Parameters

a. All testing procedures and field-test instruments shall comply with applicable requirements of:

1) ANSI Z136.2, ANS For Safe Use Of Optical Fiber Communication Systems Utilizing Laser Diode And LED Sources.

2) ANSI/EIA/TIA-455-50B, Light Launch Conditions For Long-Length Graded-Index Optical Fiber Spectral Attenuation Measurements.

3) ANSI/TIA/EIA-455-59A, Measurement of Fiber Point Discontinuities Using an OTDR.

4) ANSI/TIA/EIA-455-60A, Measurement of Fiber or Cable Length Using an OTDR.

5) ANSI/TIA/EIA-455-61A, Measurement of Fiber or Cable Attenuation Using an OTDR.

6) ANSI/TIA/EIA-526-7, Optical Power Loss Measurements of Installed Singlemode Fiber Cable Plant.

7) ANSI/TIA/EIA-526-14-A, Optical Power Loss Measurements of Installed Multimode Fiber Cable Plant.

8) ANSI/TIA-568-C.0, Generic Telecommunications Cabling for Customer Premises.

9) ANSI/TIA-568-C.3, Optical Fiber Cabling Components Standard.

10) ANSI/TIA/EIA-606-A, Administration Standard for Commercial Telecommunications Infrastructure, including the requirements

specified by the customer, unless the customer specifies their own labeling requirements.

b. Trained technicians who have successfully attended an appropriate training program, which includes testing with an OLTS and an OTDR and have obtained a certificate as proof thereof shall execute the tests. These certificates may have been issued by any of the following organizations or an equivalent organization:

1) Manufacturer of the fiber optic cable and/or the fiber optic connectors.

2) Manufacturer of the test equipment used for the field certification.

3) Training organizations (e.g., BICSI, A Telecommunications Association headquarters in Tampa, Florida; ACP [Association of Cabling Professionals™] Cabling Business Institute located in Dallas, Texas)

c. The City or the City's representative shall be invited to witness and/or review field-testing.

1) The City or the City's representative shall be notified of the start date of the testing phase five (5) business days before testing commences.

2) The City or the City's representative may select a random sample of 5% of the installed links. The City or the City's representative may test these randomly selected links and the results are to be stored in accordance with Part 3 of this document. The results obtained shall be compared to the data provided by the installation contractor. If more than 2% of the sample results differ in terms of the pass/fail determination, the installation contractor under supervision of the representative shall repeat 100% testing at no cost to the City.

d. Submittals

1) Manufacturers catalog sheets and specifications for fiber optic field-test instruments including optical loss test sets (OLTS; power meter and source), optical time domain reflectometer (OTDR) and inspection scope.

2) A schedule (list) of all optical fibers to be tested.

3) Sample test reports.

e. Acceptance of test results

1) Unless otherwise specified by the City or the Citys representative, each cabling link shall be in compliance with the following test limits:

2) Optical loss testing - Multimode links - The link attenuation shall be calculated by the following formulas as specified in ANSI/TIA-568-C.0.

a) Link Attenuation (dB) = Cable_Attn (dB) + Connector_Attn (dB) + Splice_Attn (dB)

b) Cable_Attn (dB) = Attenuation_Coefficient (dB/km) * Length (Km)

c) Connector_Attn (dB) = number_of_connector_pairs * connector_loss (dB)

d) Maximum allowable connector_loss = 0.75 dB

e) Splice_Attn (dB) = number_of_splices * splice_loss (dB)

f) Maximum allowable splice_loss = 0.3 dB

g) The values for the Attenuation_Coefficient (dB/km) are listed in the table below:

Type of Optical Fiber	Wavelength (nm)	Attenuation coefficient (dB/km)	Wavelength (nm)	Attenuation coefficient (dB/km)
Multimode 62.5/125 µm	850	3.5	1300	1.5
Multimode 50/125 µm	850	3.5	1300	1.5
Single-mode (Inside plant)	1310	1.0	1550	1.0
Single-mode (Outside plant)	1310	0.5	1550	0.5

3) OTDR testing

a) Reflective events (connections) shall not exceed 0.75 dB.

b) Non-reflective events (splices) shall not exceed 0.3 dB.

4) Magnified endface inspection

a) Fiber connections shall be visually inspected for endface quality.

b) Scratched, pitted or dirty connectors shall be diagnosed and corrected.

5) All installed cabling links and channels shall be field-tested and pass the test requirements and analysis as described in Section 8. Any link or channel that fails these requirements shall be diagnosed and corrected. Any corrective action that must take place shall be documented and followed with a new test to prove that the corrected link or channel meets performance requirements. The final and passing result of the tests for all links and channels shall be provided in the test results documentation in accordance with Section 8.F.

6) Acceptance of the test results shall be given in writing after the project is fully completed and tested in accordance with Contract Documents and to the satisfaction of the City.

f. Note: High Bandwidth applications such as 1000BASE-SX, 10GBASE-S, and FC1200 impose stringent channel loss limits. Where practical, certification should consider loss length limits that meet maximum channel (transmitter to receiver) loss.

Performance specification for MM fiber at 850 nm

Fiber Type		Bandwidth	1000BASE-SX		10GBASE-SR		Fiber Channel 1200-MX-SN-I	
	µm	(MHz• Km)	Length (m)	Loss (dB)	Length (m)	Loss (dB)	Length (m)	Loss (dB)
OM1	62.5	200	275	2.38	33	2.5	33	2.4
OM2	50	500	550	3.56	82	2.3	82	2.2
OM3	50	2000	1000	3.56	300	2.6	300	2.6

g. Optical Fiber Cable Testers

1) The field-test instrument shall be within the calibration period recommended by the manufacturer.

2) Optical loss test set (OLTS)

a) Multimode optical fiber light source

(1) Provide dual LED light sources with central wavelengths of 850 nm (±30 nm) and 1300 nm (±20 nm)

(2) Output power of –20 dBm minimum.

(3) The light source shall meet the launch requirements of ANSI/EIA/TIA-455-50B, Method A. This launch condition can be achieved either within the field test equipment or by use of an external mandrel wrap (as described in clause E.7 of ANSI/TIA-568-C.0) with a Category 1 light source.

b) Power Meter

(1) Provide 850 nm, 1300/1310 nm, and 1550 nm wavelength test capability.

(2) Power measurement uncertainty of ± 0.25 dB.

(3) Store reference power measurement.

(4) Save at least 100 results in internal memory.

(5) PC interface (serial or USB).

c) Optional length measurement

(1) It is preferable to use an OLTS that is capable of measuring the optical length of the fiber using time-of-flight techniques.

3) Optical Time Domain Reflectometer (OTDR)

a) Shall have a bright, color-transmissive LCD display with backlight.

b) Shall have rechargeable Li-Ion battery for 8 hours of normal operation.

c) Weight with battery and module of not more than 4.5 lb. and volume of not more 200 in^3.

d) Internal non-volatile memory and removable memory device with at least 16 MB capacity for results storage.

e) Serial and USB ports to transfer data to a PC.

f) Multimode OTDR

(1) Wavelengths of 850 nm ($\pm$ 20 nm) and 1300 nm ($\pm$ 20 nm).

(2) Event deadzones of 3.7 m maximum at 850 nm and 1300 nm.

(3) Attenuation deadzones of 10 m maximum at 850 nm and 13 m maximum at 1300 nm.

(4) Distance range not less than 2000 m.

(5) Dynamic range at least 10 dB at 850 nm and 1300 nm

g) Fiber Microscope

(1) Magnification of 200X or 400X for endface inspection

h) Integrated OLTS, OTDR and fiber microscope

(1) Test equipment that combines into one instrument an OLTS, an OTDR and a fiber microscope may be used.

h. Fiber Optic Installation: Execution

1) All tests performed on optical fiber cabling that use a laser or LED in a test set shall be carried out with safety precautions in accordance with ANSI Z136.2.

2) All outlets, cables, patch panels and associated components shall be fully assembled and labeled prior to field-testing. Any testing performed on incomplete systems shall be redone on completion of the work.

3) Optical Fiber Cable Testing

a) Field-test instruments shall have the latest software and firmware installed.

b) Link and channel test results from the OLTS and OTDR shall be recorded in the test instrument upon completion of each test for subsequent uploading to a PC in which the administrative documentation (reports) may be generated.

c) Fiber endfaces shall be inspected at 200X or 400X magnification. 200X magnification is suitable for inspecting multimode and singlemode fibers. 400X magnification may be used for detailed examination of singlemode fibers. Scratched, pitted or dirty connectors shall be diagnosed and corrected.

d) It is preferable that the endface images be recorded in the memory of the test instrument for subsequent uploading to a PC and reporting.

e) Testing shall be performed on each cabling segment (connector to connector).

f) Testing shall be performed on each cabling channel (equipment to equipment) that is planned for use per the City's instructions.

g) Testing of the cabling shall be performed using high-quality test cords of the same fiber type as the cabling under test. The test cords for OLTS testing shall be between 1 m and 5 m in length. The test cords for OTDR testing shall be approximately 100 m for the launch cable and at least 25 m for the receive cable.

4) Optical loss testing

a) Backbone link

b) Multimode backbone links shall be tested at 850 nm and 1300 nm in accordance with ANSI/EIA/TIA-526-14A, Method B, One Reference Jumper or the equivalent method.

c) Link attenuation does not include any active devices or passive devices other than cable, connectors, and splices, i.e. link attenuation does not include such devices as optical bypass switches, couplers, repeaters, or optical amplifiers.

d) Use the One Reference Jumper Method specified by ANSI/TIA/EIA-526-14A, Method B and ANSI/TIA/EIA-526-7, Method A.1 or the equivalent method. The user shall follow the procedures established by these standards or application notes to accurately conduct performance testing.

5) OTDR Testing

a) Fiber links shall be tested at the appropriate operating wavelengths for anomalies and to ensure uniformity of cable attenuation and connector insertion loss.

b) Multimode: 850 nm and 1300 nm

c) Singlemode: 1310 nm and 1550 nm

d) Each fiber link and channel shall be tested in both directions.

e) A launch cable shall be installed between the OTDR and the first link connection.

f) A receive cable shall be installed after the last link connection.

6) Magnified Endface Inspection

a) Fibers shall be inspected at 250X or 400X magnification. 250X magnification is suitable for inspecting multimode and singlemode fibers. 400X magnification may be used for detailed examination of singlemode fibers.

7) Length Measurement

a) The length of each fiber shall be recorded.

b) It is preferable that the optical length be measured using an OLTS or OTDR.

8) Polarity Testing

a) Paired duplex fibers in multi-fiber cables shall be tested to verify polarity in accordance with Clause E.5.3 of ANSI/TIA-568-C.0. The polarity of the paired duplex fibers shall be verified using an OLTS.

4. Fiber Optic Test results documentation

a. Administration

1) Administration of the documentation shall include test results of each fiber link and channel.

2) The test result information for each link shall be recorded in the memory of the field-test instrument upon completion of the test.

a) Test results saved within the field-test instrument shall be transferred into a Windows™-based database utility that allows for the maintenance, inspection and archiving of the test records. These test records shall be uploaded to the PC unaltered, i.e., “as saved in the field-test instrument”. The file format, CSV (comma separated value), does not provide adequate protection of these records and shall not be used.

b) The test results documentation shall be available for inspection by the City or the City’s representative

during the installation period and shall be passed to the City's representative within 5 working days of completion of tests on cabling served by a telecommunications room or of backbone cabling. The installer shall retain a copy to aid preparation of as built information.

a) The database for the complete project, including twisted-pair copper cabling links, if applicable, shall be stored and delivered on CD-ROM prior to City acceptance of the building. This CD-ROM shall include the software tools required to view, inspect, and print any selection of the test reports.

b) Circuit IDs reported by the test instrument should match the specified label ID (see Section 4.8 of this document).

c) The detailed test results documentation data is to be provided in an electronic database for each tested optical fiber and shall contain the following information

d) The identification of the customer site as specified by the City/Engineer

e) The name of the test limit selected to execute the stored test results

f) The name of the personnel performing the test

g) The date and time the test results were saved in the memory of the tester

h) The manufacturer, model and serial number of the field-test instrument

i) The version of the test software and the version of the test limit database held within the test instrument

j) The fiber identification number

k) The length for each optical fiber

l) Test results to include OLTS attenuation link and channel measurements at the appropriate wavelength(s) and the margin (difference between the measured attenuation and the test limit value).

m) Test results to include OTDR link and channel traces and event tables at the appropriate wavelength(s).

n) The length for each optical fiber as calculated by the OTDR.

o) The overall Pass/Fail evaluation of the link-under-test for OLTS and OTDR measurements

G. Operational Testing:

1. After all the previous tests in this subsection are complete, the Contractor shall conduct operational testing.

2. During operational testing the Contractor shall avoid surging discharge to the water distribution system.

3. The Contractor shall demonstrate operation of each part of the electrical, control and instrumentation systems to the satisfaction of the City. Tests shall be repeated by the Contractor at no additional cost to the City and at the discretion of the City to resolve whether the system has been demonstrated that it will operate under all modes of operations and varying conditions.

4. For the operational testing the new equipment shall be activated to automatically run for 5 days, 24 hours per day, Monday through Friday. During this five day period the City will run the different combinations of the pump control options. If equipment failure occurs during the 5 days of operational testing, the Contractor shall repair or replace the defective equipment and shall begin another 5 day operational test, Monday through Friday. This shall be continued until the new equipment functions acceptably for 5 consecutive days.

5. The Electrical Contractor, testing firm and System Supplier shall re-visit the jobsite as often as necessary until all field tests, start-up and operation tests are completed and approved.

H. Final Acceptance Trial Period: The system shall not be "final" accepted unless the system functions without hardware failures or software problems during a 30-day trial period, to the satisfaction of the City. The City reserves the right to restart the 30-day trial period, at their discretion, when a major hardware failure has occurred or a software problem has been identified. The City will notify the Contractor when the 30-day trial period has been satisfactory completed.

I. The completion of the above tests does not relieve the Contractor from warranties specified herein.

3.11 SPARE PARTS

A. The Contractor shall supply all spare parts prior to start of field tests. All parts shall be sealed in plastic bags and delivered to the site in a heavy duty plastic storage bag. Bag shall be clearly labeled with part name & number and the corresponding equipment tagname.

B. The Contractor shall make available any replacement parts that are not manufacturer's normal stock items for immediate service and repair of all the instrumentation equipment throughout the warranty period.

C. The following spare parts shall be provided to the City prior to start of field test as part of this Contract:

1. Ten (10) fuses for each type of fuse.

2. Ten (10) lamps for each type of removable indicating light.

3. Two (2) relays with bases for each type of control, and time delay relay.

4. One (1) power fail relay.

5. One (1) spare PLC DI, DO, AI and AO card of each type supplied.

6. One (1) spare Ethernet switch, communication module, and converter module of each type supplied.

7. In addition, any special PLC programming cables and card or module extenders shall be to be provided to City, at no additional cost.

3.12 TRAINING

A. All training sessions shall be held on dates and times agreeable to City. A total of 6 or fewer City personnel shall be trained.

B. Acceptable Operation and Maintenance Manuals shall be on site and available when training sessions are implemented.

C. The following training sessions shall be provided:

1. After Operation Testing has started the Contractor shall provide a period of not less than 8 hours training for instruction of operation and maintenance personnel in the use of all the new control and instrumentation systems. Training to include instruction on the use, operation, calibration, programming, and maintenance of the field devices listed in Appendix “B”. The Contractor shall make necessary arrangements with manufacturer's representative. Provide product literature and application guides for user's reference during instruction.

2. 4 hours – Arc Flash Training: The Supplier shall train City personnel of the potential arc flash hazards associated with working on energized equipment. Maintenance procedures shall be in accordance with the requirements of NFPA 70E, Standard for Electrical Safety Requirements for Employee Workplaces and shall be provided in the equipment manuals.

3. 2 hours – “ATS” operating and maintenance procedures by System Supplier.

4. 2 hours – “Power Monitor” operating and maintenance procedures by System Supplier.

5. 4 hours – “VFD Setup” operating and maintenance procedures by System Supplier.

6. 40 hours (minimum) – “Operator” hands on SCADA and Operator Interface training. Training shall also include training on the new Operator Interfaces.

7. Eight (8) hours (minimum) – "Diagnostic and Calibration" training shall demonstrate PLC hardware diagnostic routines, test equipment, PLC communication setup, and test procedures as required to enable the personnel to detect and isolate system faults to the circuit board or module level and to implement repairs by replacing failed circuit boards or modules. Demonstrate uploading and downloading software to make backups and restore programs.

3.13 WARRANTY

A. The Contractor shall warrant all electrical and instrumentation equipment & software for a period of one (1) year from date of final acceptance. Standard published warranties of equipment which exceed the preceding specified length of time shall be honored by the manufacturer or supplier.

B. The Contractor shall provide all labor and material to troubleshoot, replace, or repair any hardware or software that fails or operates unpredictable during the warranty period, at no additional cost to the City.

C. The Contractor shall have a staff of experienced personnel available to provide service on 2 working days' notice during the warranty period. Such personnel shall be capable of fully testing and diagnosing the hardware & software and implementing corrective measures.

D. If the Contractor "fails to respond" in 2 working days, the City at its option will proceed to have the warranty work completed by other resources; the total cost for these other resources shall be reimbursed in full by the Contractor. "Fail to respond" shall be defined as: The Contractor has not shown a good faith effort and has not expended adequate resources to correct the problem. The use of other resources, as stated above, shall not change or relieve the Contractor from fulfilling the remainder of the warranty requirements.

E. Prior to "final acceptance," the Contractor shall furnish to the Engineer a listing of warranty information for all manufacturers of materials and equipment used on the project. The listing shall include the following:

1. Manufacturer's name, Material and equipment description, equipment number, part number, serial number, and model number.

2. Manufacturers service contact person, phone number, and address.

3. Warranty expiration date.

F. Each time the Supplier's repair person responds to a system malfunction during the warranty period, he or she must contact the designated City maintenance supervisor for scheduling of the work, access to the jobsite, and permission to make repairs. Operation of facilities necessary to test equipment shall only be performed by or under the direction City staff. City reserves the right at its sole discretion to deny operations requested by the Supplier. A written description of all warranty work performed shall be documented on a field service report to be given to City prior to the repair person leaving job site. This field service report shall detail and clearly state problem, corrective actions taken, additional work that needs to be done, data, repair person name and company.

3.14 FINAL ACCEPTANCE

A. Final acceptance will be given by the City after the equipment has passed the "final acceptance trial period", each deficiency has been corrected, final documentation has been provided, and all the requirements of design documents have been fulfilled.

B. At the end of the project, following the completion of all of the field tests, and prior to final acceptance, the Supplier shall:

1. Remove all temporary services, equipment, material, and wiring from the site.

2. Verify Service equipment has been legibly marked in field with the maximum available fault current per NEC 110.24 (A). Field marking shall include date the fault current calculation was performed and be weather & UV rated. Service equipment shall not be hand labeled.

3. Two sets of all keys for locks supplied on this project. Submit each key with matching duplicate. Wire all keys for each lock securely together. Tag and plainly mark with lock number or equipment identification, and indicate physical location, such as panel or switch number.

4. Verify that as-installed drawings, in reinforced clear plastic pockets, have been placed in all new or modified panels

5. Resubmit all Electrical System Analysis studies with all calculations rerun, data and graphs updated to reflect as-left conditions. Provide new Arc Flash labels to reflect as-constructed equipment and as-left circuit breaker settings.

6. Provide the following final documentation to the City:

   a. A listing of warranty information.

   b. Two (2) Electrical Systems Analysis USBs of as-built set of studies, reports, settings, etc. and source files per Section 16605.

   c. Operations and Maintenance Manual as specified herein. Each "operation and maintenance" manual shall be modified or supplemented by the Supplier to reflect all field changes and as-built conditions. At least one set of manuals, all software, disks and required programming cables shall be turned over to the City's SCADA/Electrical division.

   d. Full size record drawings neatly marked accurately showing the information required herein

   e. Two (2) disk copies of all final documentation to reflect as-built conditions.

   f. Four (4) USB drives with copies of all final documentation to reflect as-built conditions.

SECTION 16010
APPENDIX "A"

TEST FORMS

Index of Forms:

	Bill of Materials
	Scheduled Test Request Form
TF1	Power and Control Conductor Test Form
TF2	Instrumentation Conductor Test Form
TF3	Grounding System Test Form
TF4	Visual and Mechanical Inspection Form
TF5	Panelboard Test Form
TF6	Operational Device Checks and Tests Form
TF7	Phase Rotation Test Form
TF8	MCC Device Test Form
TF9	Breaker Device Test Form
TF10	Motor Test Form
TF11	Factory Test MCC/Control Panel Checkout Form
TF13	I/O Point Checkout Test Form
TF14	Instrument Data Sheet and Calibration Record Test Form
TF16	VFD or Soft Starter Program Parameter Record Sheet

BILL OF MATERIAL

PROJECT: _____ **DATE** / /

LOCATION: _____ **PAGE** _____

SPECIFICATION SECTION	QTY	DESCRIPTION	MFG.	PART NUMBER	TAG No.

SCHEDULED TEST REQUEST FORM

COMPANY PERFORMING TEST: _____
TESTING PERSONNEL : _____ _____
PHONE NUMBER OF COMPANY: _____
TEST PROCEDURE SUBMITTAL: _____ APPROVED : ___/___/___
SCHEDULED TEST DATE : _____ DATE : ___/___/___

TIME	DESCRIPTION OF TEST
8:00	
9:00	
10:00	
11:00	
12:00	
13:00	
14:00	
15:00	
16:00	

NOTES:

TESTED BY : _____ DATE : ___/___/____
WITNESSED BY: _____

POWER AND CONTROL CONDUCTOR TEST FORM

TEST FORM (TF1)

EQUIPMENT

NAME : _____ LOCATION : _____

CALIBRATION EQUIPMENT DATE: _____

DESCRIPTION _____

CONDUCTOR NUMBER	INSULATION TESTS					
	PHASE TO GROUND			PHASE TO PHASE		
	A	B	C	AB	BC	CA

NOTES:

Record insulation test values in meg-ohms.

TESTED BY : _____ DATE : ____/____/____

WITNESSED BY: _____

INSTRUMENTATION CONDUCTOR TEST FORM

TEST FORM (TF2)

EQUIPMENT

NAME : _____ LOCATION : _____

CALIBRATION EQUIPMENT DATE: _____

DESCRIPTION : _____

CONDUCTOR PAIR NUMBER	CONTINUITY TESTS		INSULATION TESTS		
	CONDUCTOR TO CONDUCTOR	CONDUCTOR TO SHIELD	CONDUCTOR TO CONDUCTOR	CONDUCTORS TO GROUND*	SHIELD TO GROUND

NOTES: * With both conductors tied together

Record continuity test values in ohms.

record insulation test values in meg-ohms.

TESTED BY : _____ DATE : ____/____/____

WITNESSED BY: _____

GROUNDING SYSTEM TEST FORM

TEST FORM (TF3)

CALIBRATION EQUIPMENT DESCRIPTION : DATE: _____

FALL IN POTENTIAL TEST

MAIN GROUND LOCATION	APPLIED VOLTAGE V	MEASURED POINT 1 VOLTAGE	MEASURED POINT 2 VOLTAGE	MEASURED POINT 3 VOLTAGE	CALCULATED RESISTANCE OHMS

TWO POINTS TESTS

EQUIPMENT NAME	EQUIPMENT #	CIRCUIT #	APPLIED CURRENT	MEASURED VOLTAGE	CALCULATED RESISTANCE OHMS

NOTES:

TESTED BY : _____ DATE : ____/____/____

WITNESSED BY: _____

VISUAL AND MECHANICAL INSPECTION FORM

TEST FORM (TF4)

EQUIPMENT

NAME : _____ LOCATION : _____

NAMEPLATE DATA

MFGR. :	_____	SERIES # :	_____
MODEL # :	_____	U.L. # :	_____
VOLTAGE :	_____	PHASE :	_____
AMPERAGE :	_____	SERVICE :	_____
BUS TYPE :	_____	BUS BRACING:	_____
VERT. BUS :	_____	HORZ. BUS :	_____
GND. BUS :	_____	NEU. BUS :	_____
ENCLOSURE :	_____		_____
	_____		_____

INSPECTION CHECK LIST

ENTER: A-ACCEPTABLE R-NEEDS REPAIR OR REPLACEMENT NA-NOT APPLICABLE

TIGHTEN ALL BOLTS AND SCREWS	_____
TIGHTEN ALL WIRING AND BUS CONNECTIONS	_____
VERIFY ALL BREAKERS AND FUSES HAVE PROPER RATING	_____
CHECK BUS BRACING AND CLEARANCE	_____
CHECK MAIN GROUNDING CONNECTION AND SIZE	_____
INSPECT GROUND BUS BONDING	_____
CHECK EQUIPMENT GROUNDS	_____
CHECK CONDUIT GROUNDS AND BUSHINGS	_____
INSPECT NEUTRAL BUS AND CONNECTIONS	_____
CHECK HEATERS AND THERMOSTATS	_____
CHECK VENTILATION AND FILTERS	_____
CHECK FOR BROKEN OR DAMAGED DEVICES	_____
CHECK DOOR AND PANEL ALIGNMENT	_____
INSPECT ANCHORAGE	_____
CHECK FOR PROPER CLEARANCES AND WORKING SPACE	_____
REMOVE ALL DIRT AND DUST ACCUMULATION	_____
INSPECT ALL PAINT SURFACES	_____
CHECK FOR PROPER WIRE COLOR CODES	_____
INSPECT ALL WIRING FOR WIRE LABELS	_____
CHECK FOR PROPER WIRE TERMINATIONS	_____
CHECK FOR PROPER WIRE SIZES	_____
INSPECT ALL DEVICES FOR NAMEPLATES	_____
CHECK IF DRAWINGS MATCH EQUIPMENT	_____
CHECK ACCURACY OF OPERATION & MAINTENANCE	_____
	_____

TESTED BY : _____ DATE : ___/___/___

WITNESSED BY: _____

PANEL-BOARD TEST FORM

TEST FORM (TF5)

PANEL NAME: _____ LOCATION : _____

NAMEPLATE DATA

MFGR. :		SERIES # :	
MODEL # :		U.L. # :	
VOLTAGE :		PHASE :	
AMPERAGE :		SERVICE :	
BUS TYPE :		BUS BRACING:	
VERT. BUS :		HORZ. BUS :	
GND. BUS :		NEU. BUS :	
ENCLOSURE :		MAIN BKR :	

CALIBRATION EQUIPMENT DATE: _____
DESCRIPTION :

INSULATION RESISTANCE TESTS - MEGOHMS					
A-GND	B-GND	C-GND			

INSPECTION CHECK LIST

ENTER: A-ACCEPTABLE R-NEEDS REPAIR OR REPLACEMENT NA-NOT APPLICABLE

TIGHTEN ALL BOLTS AND SCREWS	
TIGHTEN ALL WIRING AND BUS CONNECTIONS	
VERIFY ALL BREAKERS AND FUSES HAVE PROPER RATING	
CHECK BUS BRACING AND CLEARANCE	
CHECK MAIN GROUNDING CONNECTION AND SIZE	
INSPECT GROUND BUS BONDING	
CHECK EQUIPMENT GROUNDS	
CHECK CONDUIT GROUNDS AND BUSHINGS	
INSPECT NEUTRAL BUS AND CONNECTIONS	
CHECK FOR BROKEN OR DAMAGED DEVICES	
CHECK DOOR AND PANEL ALIGNMENT	
INSPECT ANCHORAGE	
CHECK FOR PROPER CLEARANCES AND WORKING SPACE	
REMOVE ALL DIRT AND DUST ACCUMULATION	
INSPECT ALL PAINT SURFACES	
CHECK FOR PROPER WIRE COLOR CODES	
INSPECT ALL WIRING FOR WIRE LABELS	
CHECK FOR PROPER WIRE TERMINATIONS	
CHECK FOR PROPER WIRE SIZES	
INSPECT ALL DEVICES FOR PROPER LEGEND NAMEPLATES	

CALIBRATION TEST EQUIPMENT PART NO.	DATE CALIBRATED:

TESTED BY : _____ DATE : ____/____/____
WITNESSED BY: _____

OPERATIONAL DEVICE CHECKS AND TESTS FORM

TEST FORM (TF6)

NAME : _____ LOCATION : _____

CUB. #	EQUIPMENT NAME	EQUIP #	LOCAL SITE DEVICE CHECKS AND TESTS							REMOTE SITE DEVICE CHECKS & TESTS		
			SELECTOR SWITCH	INDICATOR LIGHTS	PUSHBUTTON & LOS	METERING & INDICATORS	OVERLOAD RESET	INTERLOCKS & CONTROL	ALARM & STATUS	SELECTOR SWITCH	INDICATOR LIGHTS	PUSHBUTTON & LOS

TESTED BY : _____ DATE : ____/____/____

WITNESSED BY : _____

NOTES:

PHASE ROTATION TEST FORM

TEST FORM (TF7)

EQUIPMENT NAME	EQUIPMENT #	CIRCUIT #	PHYSICAL PHASE LOCATION	PHASE COLOR CODE	MEASURED PHASE ROTATION

NOTES:
Use phase tester to verify all circuits and equipment have a clockwise A-B-C phase rotation.
Physical phase locations: Left to Right - LR or Top to Bottom - TB
Phase color codes: Brown, Orange, & Yellow -BOY
Black, Red, & Blue -BkRBe

TESTED BY : _____ DATE : ___/ /____
WITNESSED BY: _____

MCC DEVICE TEST FORM

TEST FORM (TF8)

MCC # : _____ CUBICLE : _____

EQUIP NAME: _____ EQUIP # : _____

MOTOR DATA		CONTACTOR DATA			
H.P. :		MFGR. :		PART # :	
F.L.A. :		NEMA SIZE :		COIL VOLT :	

CALIBRATION EQUIPMENT DATE: _____

DESCRIPTION : _____ _____

OVERLOAD TESTS

MFGR. : _____ HEATER # : _____ RANGE : _____

PART # : _____ FINAL OVERLOAD SETTING: _____

TEST AMPS	MEASURE TRIP TIME @ TEST AMPS			MFGR LISTED TRIP TIME	AMBIENT COMPENSATION
	PHASE A	PHASE B	PHASE C		

BREAKER TESTS

MRGR. : _____ PART # : _____ FRAME # : _____

CONTACT RESISTANCE TESTS - OHMS			INSULATION RESISTANCE TESTS-MEGOHMS		
PHASE A	PHASE B	PHASE C	A-GND	B-GND	C-GND

MFGR TRIP TIME @300% MIN: _____ BREAKER RATING / RANGE: _____

MFGR TRIP TIME @300% MAX: _____ FINAL BREAKER SETTING: _____

MFGR INST. PICKUP AMPS: _____

TIME-CURRENT TEST					
TRIP TIME IN SECONDS @ 300% AMPS			INSTANTANEOUS TRIP TEST - AMPS		
PHASE A	PHASE B	PHASE C	PHASE A	PHASE B	PHASE C

NOTES:

TESTED BY : _____ DATE : ____/____/____

WITNESSED BY: _____

BREAKER DEVICE TEST FORM

TEST FORM (TF9)

FEEDER : _____ LOCATION : _____
EQUIP NAME: _____ EQUIP # : _____
EQUIP H.P. : _____ EQUIP KVA : _____

MFGR. : _____ PART # : _____ FRAME # : _____
VOLTAGE : _____ INTERRUPT RATING : _____ CHARACTER CURVE: _____

CALIBRATION EQUIPMENT DATE: _____
DESCRIPTION : _____ _____

CONTACT RESISTANCE TESTS - OHMS INSULATION RESISTANCE TESTS - MEGOHM

PHASE A	PHASE B	PHASE C	A-GND	B-GND	C-GND

MFGR TRIP TIME @300% MIN : _____ BREAKER RATING / RANGE: _____
MFGR TRIP TIME @300% MAX: _____ FINAL BREAKER SETTING : _____
MFGR INST. PICKUP APMS:

TEST-CURRENT TESTS TRIP TIME IN SECONDS @ 300% AMPS			INSTANTANEOUS TRIP TEST - AMPS		
PHASE A	PHASE B	PHASE C	PHASE A	PHASE B	PHASE C

ADDITIONAL TESTS AND SETTING AS APPLICABLE

	PICKUP		DELAY-TIME		
FUNCTION	RANGE	SETTING	RANGE	SETTING	
LONG TIME					
SHORT TIME					
GROUND FLT.					

NOTES:

TESTED BY : _____ DATE : ____/____/____
WITNESSED BY: _____

MOTOR TEST FORM

TEST FORM (TF10)

EQUIPMENT

NUMBER : _____ NAME : _____

CALIBRATION EQUIPMENT DATE: _____

DESCRIPTION : _____

NAMEPLATE DATA - FIELD RECORDED

MANUFACTURER		MODEL #		SERIAL #		FRAME #	
H.P.	R.P.M	F.L.A	VOLTS	PHASE	FREQ.	P.F.	S.F.
CODE	N.E.M.A.	INSUL.	ENCLOSR.	DUTY	DESIGN		

CALIBRATION EQUIPMENT

DESCRIPTION : __ _____ DATE: _____

INSULATION TESTS PHASE TO GROUND MEG-OHMS			MOTOR FRAME GROUNDING SYSTEM TEST			MOTOR HEATER	MOTOR THERMAL
			APPLIED	MEAS.	CALC.	MEAS.	TRIP
A	B	C	VOLTS	AMPS	OHMS	AMPS	TEST

MOTOR TESTS - MEASURED VALUES

AMPERAGE			VOLTAGE			POWER	
A	B	C	AB	BC	CA	FACTOR	WATTAGE

NOTES:

VOLTAGE, AMPERAGE, POWER FACTOR, & WATTAGE SHALL BE RECORDED WITH A TRUE RMS METER.

TESTED BY : _____ DATE : ___/___/___

WITNESSED BY: _____

FACTORY TEST
MCC/CONTROL PANEL CHECKOUT FORM (TF11)

Manufacturer: _____ **Location:** _____

Job No.: _____

Tel: _____ **Fax:** _____

MCC / Control Panel: _____ **TEST RESULT**

	Pass	Fail
OVERALL PANEL INSPECTION		
1. All front panel and back panel components mounted securely.....	☐	☐
2. All wiring terminated and labeled correctly.....	☐	☐
3. All components, wiring, and labeling accurately reflected on the drawings..	☐	☐
POWER-UP INSPECTION		
1. Voltage levels on load side of circuit breakers.....	☐	☐
2. Voltage levels at the DC terminals of the power supply.....	☐	☐
3. Voltage levels at the DC power distribution terminals.....	☐	☐
POWER DISTRIBUTION AND GENERAL COMPONENT TESTING		
1. Power distribution to the appropriate components.....	☐	☐
2. Operation of the ancillary components such as receptacles, work lights, etc.	☐	☐
CONTROL COMPONENTS CHECKS		
1. Operators (push buttons, selector switches, pilot lights).....	☐	☐
2. Inputs from External Sources.....	☐	☐
3. Outputs to External Sources.....	☐	☐
4. Relay Logic.....	☐	☐
5. PLC I/O and Program Verification.....	☐	☐
6. O/I Display Verification.....	☐	☐

Notes:

1. For relay logic checks, each rung of the elementary or loop diagram is to be highlighted in yellow as they are verified for correct control functions.
2. For PLC I/O and program verification, the control strategies shall be highlighted in yellow as each logic function is tested.

Tested by: _____ **Witnessed by:** _____

Date: _____

I/O POINT CHECKOUT TEST FORM

TEST FORM (TF13)

I/O TYPE : _____ LOCATION : _____

TEST EQUIPMENT : _____ CAL. DATE : _____

I/O POINT TAGNAME	I/O POINT ADDRESS	TEST INPUT VALUE %			DISPLAY VALUE %			PLC REGISTER VALUE	TEST RESULT FAIL OR PASS COMMENTS	DATE OF CORRECTIVE ACTION
		0	50	100	0	50	100			

NOTES:

TESTED BY : _____ DATE : ___/___/___

WITNESSED BY: _____

INSTRUMENTATION DATA SHEET AND CALIBRATION RECORD TEST FORM (TF14)

Component Description	Manufacturer	Location
	Name	Site
Component Tag Name	Model	Equip

	Range	Unit	Serial #		General Notes
			Test Equipent		
Indicator Range			Description:		1) Attach Calibration Curves for dp Flowmeters
Input Range			Calibration Date:		2) Include mounting elevations for level Instruments

Output Range — 3) All entries within solid box to be typed in prior to start of test

	Designed Calibration			Measured Calibration		
Input Signal	Output	Eng. Value	Input	Output	Comments	

Notes

Tested by (Print Name) Witnessed by (Print Name)

Signature Signature

Date / /

Date / /

VFD OR SOFT STARTER PROGRAM PARAMETER RECORD SHEET

TEST FORM (TF16)

EQUIPMENT

NAME : _____ LOCATION : _____

PARAMETER NUMBER	PARAMETER DESCRIPTION	DEFAULT SETTING	FIELD SETTING

NOTES:

TESTED BY : _____ DATE : ____/____/____

WITNESSED BY: _____

END OF SECTION

THIS PAGE LEFT INTENTIONALLY BLANK

SECTION 16110

CONDUIT, BOXES & GROUNDING

PART 1 - GENERAL

1.01 SCOPE OF WORK

A. The Contractor shall install, ready for use, the conduit, devices, boxes, & grounding system as specified herein. This document describes the function and operation of the system and particular components, but does not necessarily describe all necessary devices. All components and devices shall be furnished and installed as required to provide a complete operable and reliable system for accomplishing the functions and meeting the performance set forth hereinafter.

B. Furnish all required labor, materials, project equipment, tools, construction equipment, safety equipment, transportation, test equipment, incidentals, and services to provide a complete and operational conduit, devices, boxes, & grounding system as shown on the Drawings, included in these Specifications, or required for fully operating facilities.

C. Work includes that specified in Section 16010 - Electrical.

D. The conduit, devices, boxes, & grounding system scope of work includes:

1. Provide and install miscellaneous trenching, conduits, junction boxes, field interconnection wiring, and associated hardware.

2. Provide all necessary hardware, conduit, wiring, fittings, and devices to connect the electrical equipment provided under other Sections.

3. Provide disconnect switches at all control panels and motors to disconnect all sources of power.

1.02 SUBMITTALS AND DRAWINGS

A. Provide submittals and drawings as specified in Section 16010 - Electrical, SUBMITTAL AND DRAWING REQUIREMENTS.

B. Submittals for the Conduit materials and equipment shall include, but shall not be limited to, the following:

1. Catalog cuts showing manufacturer, catalog numbers, dimensions, weights and material for all raceway and accessories.

2. Dimensioned "as-built" Drawings of Contract Electrical plans.

3. Marked up “as-built” Conduit & Wire Routing Schedule.

4. Documentation showing equipment submitted to be installed in the chemical room is compatible with ammonium sulfate, sodium hypochlorite and ferric chloride.

1.03 QUALITY ASSURANCE

A. Materials shall be of a manufacturer that has been fabricating and assembling specified raceway systems in his current facility for a minimum of two (2) years.

B. All materials selected for the manufacture of the hardware shall be the best available for the purpose for which they are used, considering strength, ductility, durability, and the best engineering practice.

C. All like parts shall be interchangeable.

PART 2 - MATERIALS

2.01 CONDUIT, RACEWAYS, AND WIREWAYS

A. GENERAL - Conduit, raceways, and wireways, wiring methods, materials, installation shall meet all requirements of the NEC, be UL labeled for the application, and meet the minimum following specifications.

1. All wiring shall be installed in conduits, raceways or wireways when interconnecting equipment and devices.

2. The Contractor shall use special conduit, raceways, wireways, construction methods, and materials as shown on the Contract drawings, which shall take precedence over any general methods and materials specified in this Section.

3. The minimum size conduit shall be 3/4-inch, unless indicated otherwise on the Drawings or for special connections to equipment.

4. Conduit stubs for future use shall be capped with coupling, nipple, and plug.

5. Conduits to be abandoned that protrude above graded shall be cut flush and filled with grout.

6. Conduits shall not be filled to more than 50% of their total cross–sectional area.

7. Conduit drains for instruments shall be installed with GRS-PVC condulet-Ts with Stainless Steel Universal Conduit Drain, Appleton ECDB38 or approved equal. Install in conduit locations where condensation may form.

8. Conduit Marking

a. All conduits (except receptacle and lighting wiring) shall have conduit tags at both terminations of each conduit.

b. Conduit Tag –

1) Chemical Room - Tag material shall be be rigid laminated red phenolic with white lettering. The size of the tag shall be 2” diameter. No letters are allowed smaller than 7/16”. Securely fasten tags in place UV rated plastic ty-wraps. Conduit tags shall be Brady Custom B-1 or approved equal.

2) Non-Chemical Room - Tag material shall be 19 gauge brass or stainless steel tag with engraved lettering. The size of the tag shall be 2” diameter. No letters are allowed smaller than 7/16”. Securely fasten tags in place using 316 stainless steel 0.048 inch diameter wire of the type normally used for this purpose (catalog

cut sheet shall be submitted). Stainless steel wire shall be crimp connected. Twisting ends together is not acceptable. Conduit tags shall be Brady Valve Tags, or approved equal.

3) Engrave the tags, on both sides, with the conduit number as listed in the Conduit and Wire Routing Schedule on the Contract "E"-series Drawings.

4) Labeling shall be neatly installed for visibility and shall be clearly legible.

c. Each conduit listed in Conduit and Wire Routing Schedule shall have permanent tags where it enters an open transition point, junction boxes, terminal boxes, pullboxes, vaults, and manholes.

d. Prior to encasement, concealment, backfilling of conduits, temporary conduit labels shall be provided at each end of conduit. Temporary conduit labels shall have ½-inch (minimum) lettering at all transition points. After encasement and concealment temporary conduit labels shall be placed at each exposed end.

B. Galvanized Rigid Steel Conduit - (GRS)

1. Standard weight, zinc coated on outside by hot-dipping or sherardizing process, with either zinc coated or other approved corrosion resistant coating on inside. Fabrication shall be hot-dip galvanized after fabrication, conforming to NEMA RN 1.

2. Provide galvanized rigid steel factory ells for 90 degree transitions.

3. Fittings shall be hot dipped galvanized steel or galvanized cast ferrous metal. Provide threaded-type fittings, couplings, and connectors; set-screw type and compression-type are not acceptable.

4. All joints shall be treated with T & B "Kopr-Shield."

5. Conduits entering enclosures shall be fitted with insulated grounding bushing; O-Z "HBLG", Appleton "GIB", or approved equal. All grounding bushings shall be tied to the grounding system with properly sized bonding conductors per the NEC code.

6. EMT or IMC is not considered an equivalent to GRS.

7. GRS conduit is allowed only when specifically called out in the "Conduit and Wire Routing Schedule."

8. Pipe straps for conduits larger than ¾" shall be two-hole pipe straps. ¾" conduits may have single-hole GRS-PVC pipe straps with clamp back spacer.

C. Galvanized Rigid Steel Conduit - PVC Coated (GRS-PVC)

1. Standard weight, galvanized conduit with a 40-mil thick polyvinylchloride coating bonded to both the outside and urethane interior coating. Conduit shall be hot-dip galvanized conforming to NEMA RN 1. GRS-PVC conduit to be Robroy Plasti-bond Red or approved equal.

2. Provide PVC coated galvanized rigid steel factory ells for 90 degree transitions.

3. Fittings shall be hot dipped galvanized steel or galvanized cast ferrous metal with a PVC 40 mils thick coating. Provide threaded-type fittings, couplings, and

connectors; set-screw type and compression-type are not acceptable.

4. All joints shall be treated with T & B type CP "Kopr-Shield", LPS No. 3 rust inhibitor or approved equal.
5. All junction and metal pull boxes shall be galvanized with exterior surfaces PVC coated to 40 mils thickness.
6. Conduits entering enclosures shall be fitted with insulated grounding bushing; O-Z "HBLG", Appleton "GIB", or approved equal. All grounding bushings shall be tied to the grounding system with properly sized bonding conductors per the NEC code.
7. PVC coating patching material shall be as provided by the manufacturer.
8. PVC coated Aluminum conduit is not acceptable.

D. PVC CONDUIT (PVC)

1. Minimum trade size one inch (1").
2. Shall be high impact schedule 40 or 80 (as specified in conduit schedule), polyvinylchloride suitable for use underground, direct burial and for use with 90 C wires, and shall conform to UL 651. Shall be UL listed and labeled for "direct" burial.
3. A copper bonding conductor shall be pulled in each raceway and bonded to equipment at each end with approved lugs.
4. Each underground run shall be placed in a trench with a minimum of four (4) inch sand bed evenly compacted on all sides, top and bottom.
5. Bends, elbows, and risers shall be made with galvanized rigid steel (GRS) or GRS-PVC (as shown on Contract Drawings) conduit using threaded adapters. Bond each metallic portion to each other and to equipment connected at each end of conduit run.
6. PVC fittings shall have solvent-weld-type conduit connections.
7. PVC conduit shall be stored on a flat surface and shielded from the sun.
8. PVC conduit shall not be used above grade.

E. Liquid Tight Flexible Metal Conduit (FLEX)

1. Minimum trade size one-half inch (1/2").
2. Connectors: Appleton "STB" or approved equal through two inches (2") trade size. Appleton "ST", O-Z "4Q", or equal with insulated bushings for over two inches (2") trade size.
3. Suitable for connection of indoor or outdoor motors, controls, and mechanical equipment.
4. Shall be used for conduit coupling to all vibrating and shifting equipment.
5. Flexible conduit lengths shall not be greater than 36 inches.
6. Flexible metallic conduit shall not be considered as a ground conductor, install a separate wire for equipment bonding.
7. Flexible conduit shall only be installed in exposed or accessible locations.

8. Final connections to vibrating equipment such as motors and fans shall be made with flexible conduits.

F. Fittings

1. GRS Fittings: Fittings for GRS conduits shall be threaded type. Set-screw type and compression-type are not acceptable. Fittings shall conform to the requirements of ANSI C80.4.

2. GRS-PVC Fittings: GRS-PVC fittings shall be hot dipped galvanized steel or galvanized cast ferrous metal with a PVC 40 mils thick coating. Provide threaded-type fittings, couplings, and connectors; set-screw type and compression-type are not acceptable. Fittings shall be Robroy Liquidtite, Perma- Cote or approved equal coated fittings.

3. Flex Fittings:

a. Non-NEMA 4X locations shall have cadmium-plated malleable iron body and gland nut with cast-in lug, brass grounding ferrule threaded to engage conduit spiral and O-ring seals around the conduit and box connection and insulated throat. Fittings, for not-NEMA 4X locations only, shall be Appleton "STB" OZ “4Q” or approved equal.

b. NEMA 4X rated areas shall have PVC coated flex fittings and connectors.

2.02 DEVICES

A. Boxes

1. Device boxes shall be of zinc-galvanized steel type or cast aluminum with shape and size best suited for the particular application, rated for the location installed, and shall be supported directly to structure by means of screws, anchors, or bolts. Device boxes shall be deep FD series.

2. Box dimensions shall be in accordance with size, quantity of conductors, and conduit clearances per NEC articles 314 requirements.

3. Boxes shall be located and placed according to City requirements.

4. All terminal and junction boxes shall be labeled identifying them by number shown on Contract Drawings engraved with ½” letters on nameplates meeting the requirements of Electrical 16010.

5. Non-Weatherproof Boxes:

a. Recessed boxes shall be flush with wall. Boxes for fixtures shall not be less than four (4) inches square or diameter. Boxes for switches and receptacles shall be two and one-eight inch (2-1/8) deep. Provide plaster rings or box cover adapters for the wall surface finish.

b. Surface boxes shall be cast ferrous, deep FD type.

6. Weatherproof Boxes:

a. Boxes located in NEMA 4X areas shall be stainless steel type rated NEMA 4X.

b. PVC-coated cast ferrous boxes may be used in place of 316 stainless steel boxes, except where boxes contain devices on cover. Boxes shall be deep, FD type. Single gang boxes shall have cast hubs.

7. Boxes located in chemical room shall be PVC-coated cast ferrous. PVC electrical box may be used where boxes contain a device on the cover.

8. Explosion-proof Boxes:

   a. Boxes shall be rated for Class 1, DIV 1 or 2 and weatherproof locations.

B. Switches

1. General purpose switches shall be manufactured in accordance with UL 20. Switches shall be one pole rated, 20 amps, at 277 VAC. Bodies shall be of ivory phenolic compound supported by mounting strap having plaster ears. Switches shall have copper alloy contact arm with silver cadmium oxide contacts. Switches shall have slotted terminal screws and a separate green grounding screw. Furnish Hubbell 1221, Leviton 1201-2, or approved equal.

2. Special purpose switches shall be provided with the amperage, voltage, and configuration as shown on the Drawings. Switches used as motor disconnects for single phase motors shall be horsepower rated.

3. Switches located in chemical room shall be PVC or compatible with the chemicals located within the room.

C. Receptacles

1. General purpose receptacles shall be duplex and rated 20 amps, 120 VAC, 2 pole, 3 wire grounding, NEMA 5-20R configuration, specification grade, and side wired to screw terminals. Face color shall be brown in industrial areas and white or ivory in finished areas. General purpose receptacles shall be Bryant, Hubbell, or approved equal.

2. GFI (ground fault circuit interrupting) receptacles shall be used for providing power to miscellaneous cord powered equipment. GFI receptacles shall be duplex, 20A, 120V, with "test" and "reset" buttons with shallow design for mounting and standard screw terminals for direct wiring. Receptacles shall be designed, manufactured, and tested to prevent nuisance tripping from voltage spikes, RFI, EMI, or electronic component failures. Chaining multiple receptacles from one GFI unit is not acceptable. GFI receptacles shall be Arrow-Hart "specification grade" or approved equal.

3. Twist Lock Receptacle & Plug – Twist lock receptacle and plug shall be simplex, orange, rated for 20A, 240V, 2 pole, NEMA L-6-20R, locking receptacle, Industrial grade. Provide matching plug as required. Twist lock receptacle shall be Leviton 2320-IG, Arrow hart AHIG6210 or approved equal.

D. Device Plates and Covers

1. General purpose device plates and covers shall be anodized aluminum. Plates or covers shall be attached with stainless steel screws.

2. PVC coated device boxes shall have PVC-coated, gasketed covers.

3. Weatherproof switch, outlet, and receptacle boxes shall be fitted with anodized aluminum gasketed covers rated for wet locations in accordance with NEC 406.9. Each access cover shall have a cover to maintain the weatherproof integrity even when a plug is connected to the receptacle. Final decision of type of access cover

for specific location shall be per Engineer. Screws and hinge springs shall be stainless steel. Weatherproof access covers shall be Tay Mac, Hubbell, Crouse-Hinds, or approved equal.

4. Receptacle and light switch plates shall be stamped or engraved with 3/16" minimum letters stating the panelboard name and circuit breaker feeder number.

2.03 PULL BOXES

A. Boxes

1. Each box shall have type construction and shall be manufactured of stainless steel. Cover shall be attached with stainless steel screws. No devices, screws, rivets, or bolts shall protrude through the exterior surface unless specifically shown on the drawings. Provide larger box as required to accommodate the conduits and wire at no additional cost to the City. Boxes shall be Circle AW, or approved equal.

B. Underground Boxes

1. Underground pull boxes, where shown or required by length of conduit runs, shall be prefabricated concrete type with the size shown on the Drawings or larger to allow for adequate pull area. Extension sections shall be provided as necessary to reach the depth of underground conduits. All boxes shall have galvanized steel hold down bolts and hardware. Boxes located in paved areas or other areas which vehicles may travel shall be full H/20 loading rated and have traffic covers. Steel covers or lids shall be galvanized. Pull box covers shall be labeled power, signal, utility, and telephone, whichever applies. Ground pull box lid frame to bare copper ground ring per NEC 250. Pull boxes shall be Oldcastle Precast (Christy Concrete Products), Brooks or approved equal.

C. Provide larger pullboxes and junction boxes to accommodate the conduits and wires shown in the Conduit & Wire Routing schedule at no additional cost to City.

D. Provide nameplates for all boxes per Electrical 16010.

2.04 DETECTABLE WARNING TAPE

A. Plastic tape shall be colored for particular underground service, 3-inch minimum width, utilize tape made of material resistant to corrosive soil. Use red tape for "Electric" service and orange tape for "Communication" service. Use tape with printed wording listing type of service. Manufacturers and types: Seton, Blackburn, Griffolyn Co., Terra-Tape, Brady or equivalent.

2.05 CONDUIT SEAL

A. Seal around all conduits, wires, and cables penetrating between walls, electrical panels, ceilings, and floors in all buildings with a fire stop material. Seal shall be made at both ends of the conduit with a fire-stop putty. Seal shall have a minimum two hour rating. Fire stop sealing shall be International Protective Coatings Flamesafe or approved equal.

B. Seal around conduits entering outside to inside structures and around bottom of free standing enclosures to maintain watertight integrity of structure.

C. Place conduit seal inside each underground conduit riser into panels and enclosures to prevent entrance of insects and rodents.

D. Conduit entrances: Seal each conduit entrance from below grade into the panel and other electrical enclosures with plugging compound sealant to prevent the entrance of insects and rodents. Conduits between the enclosures shall be sealed with plugging compound sealant on each end. Plugging compound sealant shall be PRC-DeSoto (formerly Courtaulds) Aerospace Semco PR-868 or approved equal.

2.06 GROUNDING SYSTEM

A. The utility service entrance switchboard ground bus shall be tied to a building ground grid consisting of a "UFFER" type grounding ring system as per Contract E-Series Drawings. “UFFER” ground shall be connected to building metal frame support and metal water pipe as applicable.

B. The UFFER shall consist of AWG bare wire laid in a grid as detailed on the Contract E-Series Drawings.

C. The main ground bonding wire from the ground shall extend up into the utility service entrance main switchboard for the visible connection with a UL approved "ground clamp" attached to the ground bus.

D. Network ground bond wires shall be connected from the UFFER ground to locations shown on Contract Drawings. The network ground bonding wires shall be bare copper sized as shown on Contract Drawings.

E. Ground rods shall not stub up more than 4” in the concrete pad.

F. The ground rod shall consist of not less than 10 continuous feet of 3/4 inch copper-coated, electroplated, high-grade carbon steel. The ground rod shall be a NEHRING type NCC, Weater 348 or approved equal. The ground rod shall extend up for visible connection of a UL approved “ground clamp” to the ground bus.

G. Provide a 13 inch diameter, 9-inch nominal throat, and concrete ground rod box, minimum 12 inches deep, with cast iron traffic cover embossed or engraved "GROUND."

H. Resistance from grounded surface of the electrical system to the ground rod and to earth shall not exceed 5 ohms.

I. Ground clamps shall be bolt-on type as manufactured by ILSCO type AGC, O-Z Gedney Type GRC, Burndy Type GAR or GP, or approved equal.

J. Ground buses shall be provided in all electrical enclosures. Each ground bus shall be sized as shown on the Contract drawings or specified herein. The ground bus shall be adequately sized for the connection of all grounding conductors required per NEC. Screw type lugs shall be provided on all ground busses for connection of grounding conductors.

K. Each ground bus shall be copper. Screw type fasteners shall be provided on all ground busses for connection of grounding conductors. Ground bus shall be a Challenger GB series, ILSCO CAN series, or approved equal.

L. Attachment of the grounding conductor to equipment or enclosures shall be by connectors specifically provided for grounding. Mounting, support, or bracing bolts shall not be used as an attachment point for ground conductors.

M. All raceway systems, supports, enclosures, panels, and equipment housings shall be permanently and effectively grounded.

N. One side of the secondary on all transformers shall be grounded.

O. The system neutral (grounded conductor) shall be connected to the system's grounding conductor at only a single point in the system. This connection shall be made by a removable bonding jumper sized in accordance with the applicable provisions of the National Electrical Code if the size is not shown on the Drawings. The grounding of the system neutral shall be in the enclosure that houses the service entrance main over-current protection.

P. The system neutral conductor and all equipment and devices required to be grounded by the National Electrical Code shall be grounded in a manner that satisfies the requirements of the National Code.

Q. Grounding conductors shall be sized as shown on the Plans or in accordance with NEC Table 250.122, whichever is larger.

R. Grounding and bonding wires shall be installed in all PVC conduits and nonmetallic raceways and connected to the ground bus and all equipment.

S. Conduit grounding bushings shall be installed on all metallic conduits. Conduit grounding bushings shall be set screw locking type electra-galvanized malleable iron with insulation collar and shall be provided with a feed through compression lug for securing the ground bonding wire. Ground bonding wire shall be bare wire and shall be sized per NEC. Bonding wires at endpoints shall be connected to enclosure ground bus or equipment grounding lug.

T. All receptacles shall have their grounding contact connected to a grounding conductor.

U. Negative side of all VDC power supplies shall be grounded.

V. Branch circuit grounding conductors for receptacles or other electrical loads shall be arranged such that the removal of a lighting fixture, receptacle, or other load does not interrupt the ground continuity to any other part of the circuit.

PART 3 - EXECUTION

3.01 CONDUIT AND RACEWAY INSTALLATION

A. Conduit and Raceway Requirements:

1. Care shall be exercised to avoid interference with the work of other trades. This work shall be planned and coordinated with the other trades to prevent such interference. Pipes shall have precedence over conduits for space requirements. Exposed conduits shall be neatly arranged with runs perpendicular or level and parallel to walls. Bends shall be concentric.

2. Exposed conduits runs shall not be run directly on the ground. Secure conduits to 316 stainless steel unistrut.

3. Install conduit free from dents and bruises.

4. All conduits shall be labeled with conduit tags on all ends; at junction boxes, pull boxes, enclosures, stub-outs, or other terminations. All spare conduits shall be labeled.

5. Install an accessible raceway and conduit system for connection of all boxes, panelboards, cabinets, and equipment.

6. All conduit and raceway shall be the size and type as shown on Conduit and Wire Routing Schedule. In no case shall the conduit size be smaller than that shown, except as follows:

   a. All exposed conduits in NEMA 4X areas (except for indoor corrosive areas) and outdoor locations shall be GRS-PVC.

   b. All exposed conduits in NEMA 12 areas shall be GRS.

   c. All exposed conduits in indoor NEMA 4X corrosive areas shall be PVC-80.

7. Conduits connected to boxes, cabinets, etc., outdoors, exposed to weather or in areas subject to excessive moisture shall be fitted with watertight sealing hubs of steel or malleable iron with sealing ring and insulated throat, Myers hub, Thomas and Betts 370 Series, or approved equal.

8. Malleable iron threaded grounding bushing, with insulated throat and set screw solderless lugs, Appleton GIB-XXXSL series shall be placed on the end of all rigid conduits. A ground bare copper wire shall bound each bushing to the enclosure ground bus.

9. All of the entries for each line in the conduit schedule apply to each conduit when multiple quantity of conduits (quantity of which are indicated by number entered in conduit no. column in schedule) are listed in the schedule.

10. Matching Existing Facilities:

    a. When new conduit is added to areas which are already painted, the conduit and its supports shall be painted to match the existing facilities.

    b. Where new conduit is used to replace existing conduit, the existing conduit and supports shall be removed, resulting blemishes shall be patched and repainted to match original conditions.

    c. If existing conduits are to be reused and rerouted, resulting blemishes shall be corrected in the same manner.

    d. All existing conduits that are reused:

       1) Shall have a mandrel or conduit piston pulled through the entire conduit run to prove the length contains no blockages or obstructions. Mandrelling shall be witness by the City.

       2) Install new conduit tags for reused conduits at all transition boxes and endpoints. Conduit & Wire Routing Schedule shall be updated as these modifications take place.

B. Exposed Conduit:

1. All exposed conduits shall be run in straight lines parallel to column lines, walls or beams. Where conduits are grouped, the bends and fittings shall be installed so as to present an orderly appearance. Unnecessary bending or offsets shall be avoided. Conduits shall be kept at least 12 inches away from heating devices or similar equipment.

2. Supports for exposed conduit shall be in accordance with Title 24, CAC.

3. Support rigid conduits at 8 feet intervals and PVC conduits at 4 feet intervals.

Support all conduits within 1 foot of boxes or changes in direction. Use riser supports with clamps for vertical conduit risers.

4. For single conduit runs, use pipe straps or suspend from ceiling with single conduit hangers. Single hole GRS-PVC pipe straps with backplates may be used for horizontal runs on vertical surfaces. Perforated strap (plumber's tape), not acceptable.

5. For multiple conduit runs, group conduits together and support from ceiling by means of trapeze hangers. Wall brackets or unistrut supports shall be used for conduit runs on vertical surfaces. Clamp each conduit to trapeze or support, using conduit clamp.

6. Fasten hanger rods to structural steel members with beam clamps or to concrete inserts set flush with surface. Install reinforcing rod through opening in concrete insert.

7. Exposed conduit shall be supported rigidly in place. All exposed conduit shall include, where required, the drilling of holes in the bottom or sides of enclosures. The Contractor shall thoroughly examine work prior to drilling to avoid drilling into components within enclosures.

8. Conduits installed outdoor or in NEMA 4X rated areas above grade shall be braced in place with stainless steel Unistrut stanchions or PVC coated clamps with backplates.

9. Vertical offsets and sloping of conduits are not detailed on plans; the Electrical Contractor shall include in his bid the price for the complete conduit run utilizing the civil & mechanical plans to measure vertical & slope distances.

10. Exposed conduits runs shall not be run directly on the ground or roof. Secure conduits to stainless steel Unistrut.

11. Duct-taping conduits together is not acceptable. Conduits, installed into concrete pads, shall be installed with a minimum of 2” distance between conduits to allow installation of bushings.

C. Conduits in Concrete Slabs:

1. Conduits may be installed in structural slabs, or in slabs on grade, having the following minimum thickness: 2½" thick for ½" conduit, 4 thick for conduits greater than ¾".

2. Maintain a minimum of two-inches of clearance between conduits and any reinforcement bars. In structural slabs, place conduits carefully between upper and lower layers of steel. In pre-stressed concrete slab construction, place conduits in center of slab and do not support from pre-stressed steel.

3. Space conduits to maintain structural integrity of slabs.

4. Place conduits running parallel to slab supports (beams, columns, walls, etc.) not less than 12" from such supports.

5. Where floor slab is in direct contact with earth or fill, rigid steel conduit may be embedded in concrete blister below bottom of slab with 2-inch minimum of concrete cover.

6. Runs of conduit to be embedded in concrete shall be rigidly supported in their proper positions while concrete is being placed. Place conduit separators every 4 feet on centers and securely anchor to prevent movement. Ends of conduits shall be plugged or capped during construction to prevent the entrance of concrete or other foreign matter. Connections shall be checked for tightness before being embedded.

D. Underground Conduits:

1. Buried conduit shall be placed at least 24 inches below grade and be located to avoid interference with other underground piping, foundations, etc. Conduit for Telephone and Power Utilities shall be set to depth as required by Utility engineered drawings and not less than 36” below grade. All conduits entering or leaving the ground shall be sealed to prevent condensation of moisture inside the conduit. Conduit entrances in the bottom of MCCs, power distribution panels, switchboards, and enclosures shall project into the enclosure a minimum of two inches to prevent water from entering conduits.

2. All conduits entering or leaving the ground shall be sealed to prevent condensation of moisture inside the conduit. Conduit entrances in the bottom of MCCs, power distribution panels, switchboards, and enclosures shall project into the enclosure a minimum of two inches to prevent water from entering conduits. Expanding foam shall NOT be used.

3. Conduit placed in concrete which is in contact with earth or water shall be adequately separated from the earth or water by at least 3" of concrete. Concrete encasement shall extend 4" above finished grade or into housekeeping pad at completion of each run.

4. Install expansion couplings in conduit runs crossing expansion or contraction joints in concrete. Expansion couplings shall be zinc coated and watertight.

5. Where other piping systems are encountered or being installed along a raceway route, maintain a 12-inch-minimum vertical separation between raceways and other systems at crossings. Maintain a 12-inch-minimum separation between raceways and other systems in parallel runs. Do not place raceways over valves or couplings in other piping systems. Refer conflicts with these requirements to the City's Representative for instructions before further work is done.

6. Underground conduits not encased shall have a minimum 4” sand bedding completely encircling the conduits.

7. Contractor to supply and install all conduits and wiring as shown on Utility Engineered Design drawings. Utility primary and secondary conduit and wiring shown in “Conduit and Wire Routing Schedule” is for bid purposes only. A credit or add-on will be provided by Contractor based on the actual work performed by Contractor for the Utility service.

E. Raceway Identification:

1. All conduits and raceways listed in Conduit and Wire Routing Schedule shall have conduit tags at both terminations of each conduit. All conduits and raceways listed in Conduit and Raceway Schedule shall be provided with conduit tags with tag numbers listed in schedule. All spare conduits shall be labeled. Spare conduits that have prefix “X” with a conduit quantity greater than one shall have a unique

conduit postfix number assigned to each conduit; i.e., if conduit quantity is 3 for conduit route X0001, then label conduits as X0001A, X0001B, X0001C.

2. Conduit terminating in walls shall be identified by stenciling the conduit number on the wall directly under the conduit.

3. Prior to encasement, concealment, backfilling of conduits, temporary conduit labels shall be provided at each end of conduit. Temporary conduit labels shall have ½-inch (minimum) lettering at all transition points. After encasement and concealment temporary conduit labels shall be placed at each exposed end.

4. Each conduit listed in Conduit and Wire Routing Schedule shall have permanent tags where it enters an open transition point, junction boxes, terminal boxes, pullboxes, vaults, manholes enclosures, stub-outs or other terminations.

F. Workmanship and Installation Requirements:

1. Where field changes are required, every precaution shall be taken to ensure that the change is coordinated with other conduit, structural, plumbing, and piping work. Information shall be obtained regarding the completed raceway runs to ensure that there will be no interference when the raceway run is extended or revised. A complete record of such changes shall be made on the Record Contract Drawings.

2. Conduits shall be cut square, threaded and reamed to remove sharp or rough edges and burrs. No running threads will be allowed. Conduit joints and connections shall be made waterproof and rustproof by application of a non-insulating thread compound, such as white lead or graphite, and zinc sealingmaterial. Each threaded joint shall be thoroughly cleaned to remove cutting oil before the compound is applied.

3. All bends and offsets, where required, shall either be made with factory made bends or shall be field bends made with a conduit bender designed specifically for use with the type of conduit to be bent. Elbows and bends for conduits shall be formed in the field and shall be reasonably free from flattened surfaces, indentations, or kinks. Avoid field bends and offsets where possible. Heating of conduit to facilitate bending shall not be acceptable. Metallic conduits shall be bent cold to prevent damage to the protective coating. All bending shall be gradual and be done smoothly to permit the pulling on insulated electrical wires and cables without incurring damage to the insulation or sheath. Radius of curvature shall be not less than that permitted by NEC.

4. Conduit shall be rigidly secured to panels and other electrical equipment terminal boxes with locknuts and bushings in such a manner that each system shall be electrically continuous throughout.

5. Flexible liquid-tight metal conduit shall be used to provide flexible connections between the rigid system and motor conduit boxes or other equipment subject to vibration.

6. To reduce damage to the zinc coating, only strap type wrenches shall be used. All wrench marks, field cut threads, and all other places where the zinc coating is damaged, shall be repaired with zinc-rich galvanizing repair compound.

7. Raceway shall be installed with necessary fittings and supports.

8. After installation of all conductors, all underground conduit ends into enclosures shall have a conduit seal placed around wires inside conduit.

9. Grout around conduit tie-ins entering walls of building structure for watertight seal.

10. Contractor shall limit the number of directional changes of the conduit to total no more than the equivalent of 270 degrees in any run between pull points. Where required for ease of pulling and as necessary to meet code, the Contractor shall supply and install junction or pullboxes even though not shown on Drawings at no additional cost to the City.

11. Conduit runs between two vaults, pull or junction boxes shall be limited to a maximum of 300 feet, or less 50 feet for every 90 degrees of conduit change in direction. Install pull boxes where required to limit bends in conduit runs to not more than 270 degrees or where pulling tension would exceed the maximum allowable for the cable. Provide additional vaults, pull or junction boxes as necessary even though not shown on Drawings at no additional cost to the City.

12. Install and equip conduits and fittings installed outdoors or in other wet locations, entering equipment from bottom unless necessary to enter from side, so as to prevent water from entering the equipment. Top entry of conduits into enclosures located outdoors or in other wet locations is not allowed.

13. Spare or Future Conduits:

    a. All spares shall be mandrel and have pull ropes installed.

    b. Provide a braided yellow polypropylene pull ropes with 1’ distance markers, ¼” minimum size.

    c. Provide a waterproof label on each end of the pull cords and at transition pull boxes to indicate the destination of the other end.

    d. Provide caps on conduit ends to prevent entrance of dirt or insects.

14. Contractor shall neatly bundle all new and reused wires with ty-wraps. Ty-wraps shall not be located in conduits. All tape used for bundling wires shall be removed after installation in conduit.

15. Conduit stubs for future use shall be capped with coupling, nipple, and plug.

16. Seal all conduits to prevent water traveling through conduits into buildings, junction boxes, underground facilities, electrical enclosures, panels, instruments or any other boxes that house electrical and instrumentation components. Install conduit drain boxes and plug conduit interior to form an effective barrier to keep out water traveling into equipment located below grade.

17. Conduit between vibrating equipment and outlet boxes or conduits shall be liquid tight flexible electrical conduits.

18. Whenever possible, make bends for exposed conduit stub-ups completely below the surface. Make stubs vertical and arrange neatly.

19. Where conduits turn up in accessible floor areas or under removable partitions, install coupling flush with finish floor surface (exclusive of floor covering). Provide flush threaded plug in this coupling where conduit is not to be extended.

20. For flush mounted panels, run empty conduits from panel to accessible spaces

above. Install a minimum of one ¾" conduit for every 3 single pole spare circuit breakers or spaces, or fraction thereof.

21. Running Threads: Do not use running threads. Where such device is needed, use rain tight unions or concrete tight couplings.

22. The entire electrical raceway system shall be bonded and form a continuous metallic electrical conductor from service point to every box and shall be terminated with ground bushings connected to the ground bus. Conduits entering enclosures shall be fitted with locknuts and insulated grounding bushing. All grounding bushings shall be tied to the grounding system with properly sized bonding conductors per the NEC Code.

23. Connection to steel conduit from PVC shall be made with approved threaded adapters.

24. All conduits which are installed shall be capped during construction to prevent the entrance of foreign material.

25. Secure hangers, brackets, conduit straps, supports and electrical equipment by means of toggle bolts on hollow masonry; expansion shields and machine screws or standard preset inserts on concrete or solid masonry; machine screws or bolts on metal surfaces; wood screws on wood construction. Wood or fiber plugs or concrete nails, not acceptable.

26. Special "Soft–Jaw" type pipe clamps shall be used to prevent damage to PVC-coated conduits while field threading, cutting to length, and coupling sections.

G. Warning Tapes:

1. Bury detectable warning tapes approximately 12 inches above all underground conduit runs of two or more outside of building. Align parallel to and within 3 inches of the centerline of the conduit or duct bank.

H. Cutting and Patching:

1. The Contractor shall do all core drilling, cutting, and patching required to install his work at no additional cost to the City. Core drilling, cutting, and patching is considered standard work to be done at existing facilities, therefore, this work is not specifically called out on Drawings. Any core drilling or cutting which may impair the structure shall require prior approval by the Engineer. Core drilling, cutting, and patching shall be done only by skilled labor of the respective trades. All surfaces shall be restored to their original condition after core drilling, cutting, and patching and made watertight.

I. Excavation and Back Filling:

1. At all times during the excavation and backfilling, the Contractor shall provide barricades, fences, guard rails, etc., to safeguard authorized personnel, and the general public from excavated trenches.

2. Repave any area that was paved prior to excavation. Backfill and surface all areas as shown on the Drawings or where not shown to the original condition that was present prior to the excavation.

3. Excavations: Provide the excavation for Utility power and telephone services,

electrical, and instrumentation equipment foundations and trenches for conduits and duct banks, as necessary. Backfill and surface all areas in accordance with other Contract Sections. Excavations shall be also be in accordance with other Contract Sections.

a. Underground conduits outside of structures, excluding utility conduits, shall have a minimum cover of 24 inches. Utility power and telephone conduits shall have a minimum cover of 36 inches.

b. Trenches for all conduits below floor slabs and underground shall be excavated to the required depths. Conduits under floor slabs shall have trenches no deeper than is required to properly contain bends within walls.

c. All trenching and underground work shall be closely coordinated with the City and Engineer. Contractor shall be responsible for locating, and avoiding disruption of, all existing underground facilities such as gas lines, water lines, sewer, fire protection lines, and existing underground electrical facilities. Any damage caused by the Contractor must be repaired at the Contractor's cost, to the satisfaction of the City.

d. All trenching shall be done as to minimize disruption to normal plant or construction operations. All open trenches shall be suitably marked and/or protected to avoid any accidents or injuries to workers or plant personnel.

e. Where new electrical ducts intersect existing facilities, at essentially the same depth, Contractor shall gradually divert the electrical facilities down, under, and back up around the existing facilities.

f. All excavations shall be backfilled and resurfaced to match surfaces prior to and adjacent to excavation.

4. Back filling shall be done only after conduits have been inspected by City. If the conduits have been covered before inspection, the City may require the Contractor to uncover the conduits for inspection at no additional cost to the City or extension of Contract time. Excavation and back fill of lines and conduits shall conform to the requirements of the Earthwork Section of these Specifications, unless modified on plans.

   a. Backfill, Non-Paved Areas: Use native backfill, compacted in 6 inch layers to 90 percent relative compaction. Final backfill elevation shall match existing.

   b. Backfill, Paved Areas:

      1) Use clean imported sand rated for use under paved areas.

      2) Imported sand shall be free from organic material, trash, debris and rubbish.

      3) Compact trench backfill by manual methods. Water flooding or jetting is not permitted.

5. At all times during the installation of the electrical distribution system, the Contractor shall provide barricades, fences, guard rails, etc., to safeguard all personnel, including small children, from excavated trenches.

3.02 GROUNDING INSTALLATION

A. System:

1. Install all products per Section 16010 – Electrical, INSTALLATION.
2. Provide a separate grounding conductor in each raceway, securely grounded to equipment at each end of raceway.
3. Bond piping and building structure to grounding electrode per NEC.
4. Contractor shall not conceal or cover any ground connections until the Engineer or City has established that every grounding connection conforms to the Contract Drawings and Specifications and has given the Contractor written confirmation.
5. Test grounding per Section 16010 - Electrical.
6. Grounding details shown on plans are minimum. If additional equipment, such as ground rods, clamps, conductors, etc., is required per NEC, Title 24, CAC, furnish and install same without additional cost to City.
7. Ground all swinging gates, fences electrical panel doors and MCC bucket doors using UL approved ground clamps specifically designed for the grounding purpose. Strap metal is not acceptable for grounding.

B. Connections:

1. Use U.L. approved cast bronze ground clamps specifically designed for grounding purposes. Strap metal is not acceptable for grounding or bonding.
2. Exposed connections to ground buses, raceways, and small pipes shall be made by means of U.L. approved grounding clamps. Exposed connections between different metals shall be sealed with No-Oxide Paint Grade A, or approved equal.
3. All buried, ground rod, large pipe, and steel plate or frame ground bond connections shall be made by welding process equal to Cadweld.

C. Electrical Equipment Grounding:

1. Metal conduits shall be bonded together to the enclosure ground bus.
2. Lightning arresters or suppressors shall be directly connected to the ground system using copper conductors, sized as per manufacturer's literature.
3. All motors shall be grounded by bonding the grounding conductor within the raceway to the motor frame. Motors as shown on Electrical Plans shall also have a supplemental grounding conductor bonded to the ground grid in the immediate area of the motor.
4. Each panelboard shall be equipped with a ground bus secured to the interior of the enclosure. The bus shall be equal to panelboard neutral bus amp rating and shall have adequate lug quantity of lugs. No more than two grounding conductors shall be installed per lug.
5. All metal panel doors shall be installed with ground straps, including all MCC bucket doors.

D. Excavation and Back Filling:

1. Trenches for all bare copper ground bond wires shall be excavated to a minimum depth of 24".

2. Back filling shall be done only after grounding system has been inspected. Excavation and back fill of grounding system shall conform to the requirements of the Earthwork Section of these Specifications.

3. At all times during the installation of the grounding system, the Contractor shall provide barricades, fences, guard rails, etc., to safeguard all personnel, including small children, from excavated trenches.

E. Cutting and Patching:

1. The Contractor shall do all cutting and patching required to install his work. Any cutting which may impair the structure shall require prior approval by the Engineer. Cutting and patching shall be done only by skilled labor of the respective trades. All surfaces shall be restored to their original condition after cutting and patching.

3.03 DEVICE AND BOX INSTALLATION

A. System:

1. Install all products per Section 16010 – Electrical, INSTALLATION, GENERAL.

2. Keep boxes, and other openings closed during construction to prevent entry of foreign matter. Cover equipment, devices, apparatus, and protect them against dirt, paint, water, chemical, or mechanical damage before and during construction period. Restore to original condition apparatus or equipment damaged prior to final acceptance. Protect bright finished surfaces and similar items until in service. No rust or damage will be permitted.

3. All receptacles shall be tested for correct connections utilizing a plug-in ground, line and neutral test light plug.

4. Boxes shall be relocated at no additional cost to City as directed by Engineer when a conflict occurs in the box placement shown on drawings and other building appurtenances.

5. Provide and install necessary wires in surface mount 3/4" (min) EMT conduit for lighting and receptacle arrangement as shown on Contract drawings.

6. Conductors shall be copper type THHN, #12 AWG (minimum).

7. Mount conduits using single bolt galvanized pipe straps and clamp back spacers.

8. Use stainless steel expansion wedge anchors or epoxy anchors as necessary for device mounting.

9. Provide and install all device boxes, junction boxes, receptacles, switches, and covers.

10. Receptacles to be ground fault interrupter (GFI) type and weatherproof (WP) where shown.

11. See electrical symbols and abbreviations drawing for symbol definition.

12. All work shall conform to local codes and National Electric Code (NEC).

B. Device Mounting Heights:

1. Mounting heights of fixtures and devices shall be as follows unless otherwise indicated or when height has to be adjusted to be over or under counter tops.

a.	Wall switches	=>	48 inches
b.	Convenience outlets	=>	18 inches finished areas
		=>	24 inches non-finished areas
c.	Telephone outlets	=>	54 inches
d.	Bracket fixtures	=>	7 feet 6 inches

C. Cutting and Patching:

1. The Contractor shall do all cutting and patching required to install his work. Any cutting which may impair the structure shall require prior approval by the Engineer. Cutting and patching shall be done only by skilled labor of the respective trades. All surfaces shall be restored to their original condition after cutting and patching.

D. Boxes:

1. Leave no unused opening in any box. Install close-up plugs as required to seal openings.
2. All spare and/or empty conduits shall terminate in a device box.
3. Use stainless steel boxes when box must support door mounted devices.
4. In NEMA 4X areas boxes are to be spaced ¼-inch from walls using stainless steel, nylon or plastic spacers. Regular steel washers are not considered an approved spacer.

3.04 WARRANTY

A. Provide warranty as specified in Section 16010 - Electrical, WARRANTY.

END OF SECTION

(THIS PAGE LEFT BLANK INTENTIONALLY)

SECTION 16120

WIRE, FUSES & TERMINAL BLOCKS

PART 1 - GENERAL

1.01 SCOPE OF WORK

A. The Contractor shall assemble, ready for use, the electrical and instrumentation system with wires, fuses and terminal blocks as specified herein.

B. Furnish all required labor, materials, tools, test equipment, incidentals and services to provide a complete and operational electrical and instrumentation system, with wire and electrical devices, as shown on the Drawings, included in these Specifications or required for fully operating facilities.

C. Work includes that specified in Section 16010 - Electrical.

1.02 SUBMITTALS AND DRAWINGS

A. Provide submittals and drawings as specified in Section 16010 - Electrical, SUBMITTAL AND DRAWING REQUIREMENTS.

1.03 QUALITY ASSURANCE

A. All materials selected for the manufacture of the hardware shall be the best available for the purpose for which they are used, considering strength, ductility, durability and the best engineering practice.

B. All like parts shall be interchangeable.

PART 2 - MATERIALS

2.01 WIRING AND ELECTRICAL DEVICES

A. General

1. The electrical and instrumentation system vendor shall provide the wiring and electrical devices specified below and install these field and internal panel wiring as shown on the Contract Drawings. This section applies to all wires or conductors used internal (non-field) for all electrical equipment or external for field wiring. Wire quantity and size shall be per “Wire Routing and Conduit Schedule”.

2. All wire shall be new, plainly marked with UL label, gauge, voltage, type of insulation and manufacturer's name.

3. All wires shall be properly fused or protected by a breaker at the amperage rating allowed by the NEC.

4. Extra wire was intentionally placed in the “Conduit & Wire Routing Schedule” and shall be labeled on both ends with a unique wire label as spares. All spare wires shall be labeled with equipment number followed by X1, X2, etc. (i.e., P11001-X1

for first spare wire.

B. Power Distribution

1. Each electrical and instrumentation panels shall be equipped with a 120 VAC main power disconnect circuit breaker and power distribution circuit breakers. The main power disconnect breaker shall be a one pole breaker rated at panelboard feed breaker amps. Distribution circuit breakers shall be single pole. The circuit breakers shall be mounted on a standard DIN rail, and shall be Allen - Bradley Channel Mounting Type or equal.

2. For each power distribution circuit breaker, a neutral return terminal block shall be installed at the bottom of the breaker rail. The neutral return terminal block shall be standard DIN rail mounted, and shall be rated to carry up to 20 amperes and accept up to two 12 AWG wires.

3. Each control and instrumentation device shall have a separate fuse for 120 VAC power supply connection.

4. A spare duplex outlet wired to a separate panelboard circuit shall be provided in each control and instrumentation panel. This outlet shall be labeled "CONVENIENCE RECEPTACLE" and shall not be used to power any other equipment.

C. Analog Signals

1. Analog signal transmission between electric or electronic instruments shall be 4-20 milliamperes and shall operate at 24 volts DC unless otherwise specified. Milliampere signals shall be current regulated and shall not be affected by changes in load resistance within the unit's rating. Provide isolated current amplifiers wherever the loop load resistance exceed the current signal transmitter's rating. Associated shunt resistors shall be located on rail-mounted terminal blocks. Exposed resistor leads shall be insulated with heat-shrink tubing.

D. Low Voltage Wire and Cable (through 600V except instrument signals)

1. General: Low voltage conductors shall be used for power, control, lighting and miscellaneous circuits. This Section applies to all wires or conductors used internal for all electrical equipment or external for field wiring. Wire shall be new, plainly marked with UL label, gauge, voltage, type of insulation, and manufacturer's name.

2. Control and Power Wiring

   a. NEMA standards WC70 and UL requirements.

   b. Class B stranding. Solid conductors are only acceptable if provided by manufacturer of lighting fixture or instruments.

   c. Conductors shall be copper with a minimum of 98% conductivity.

   d. ASTM B8, soft drawn copper, maximum 12 months old.

   e. Insulation type for conductors smaller than #6 AWG shall be moisture and heat resistant thermoplastic NEC Type THHN/THWN, rated 90 °C in dry

locations and 75 °C in wet locations, or approved equal. Conductors #6 AWG and larger shall be XHHW insulation rated 90 °C in dry locations and 75 °C in wet locations.

f. Insulation of all conductors shall be rated 600 volt or higher.

g. Field wire minimum AWG sizes

1) #12 for wires used for individual conductor circuits 100 volts and above, except for PLC I/O which may be #14 AWG.

2) #14 for wires used for individual conductor circuits below 100 volt.

h. Non-field or equipment wire minimum AWG sizes if properly protected by fuse or breaker

1) #14 for wires used for individual conductor circuits 100 volt and above, except for PLC I/O wiring which may be #16.

2) #18 for wires used for individual conductor circuits below 100 volt.

3. Instrument Cable

a. All 4-20mA and 1-5VDC inside instrument and control panel cables except when cables are installed in enclosures containing 480V wiring shall conform with the following:

1) Signal wiring shall be shielded twisted pair with #18 AWG tinned copper stranded conductors and shield drain conductor.

2) Conductor insulation shall be polyethylene rated 300VAC, 90° C and outer jacket shall be PVC.

3) A metal foil shield shall completely surround the signal conductors.

4) Multiple pair cables with individually shielded pairs may be used only with prior approval of the Engineer.

b. All field 4-20mA instrument cables and cables in enclosure containing 480V wiring shall conform with the following:

1) Signal wiring shall be shielded twisted pair with a minimum #16 AWG, tinned copper stranded conductors and shield drain conductor.

2) Conductor insulation shall be polyethylene rated 600VAC, 90° C and outer jacket shall be PVC and be “Tray Cable” rated.

3) A metal foil shield shall completely surround the signal conductors.

4) Multiple pair cables with individually shielded pairs may be used only with prior approval of the Engineer.

c. Instrument Cables shall be Belden, or approved equal. Note, multi-pair T.S.PR. Cables may be reduced in size to that listed in Conduit and Wire Routing Schedule.

4. Special Purpose Wiring

a. Manufacturer Supplied Cables: Cables and wiring for special systems shall be provided by the manufacturer with the equipment and installed per the manufacturer's recommendations.

b. VFD rated wire: All VFD load side power wiring shall have rated blended composite semi-conductive, tray cable rated, UL type TC 90°C insulation and 100% shielding with foil tape & tinned copper braid. Wire shall be Olflex – VFD CT or approved equal.

c. PLC Fiber Cable

1) The PLC communication system shall use fiber optic cable to connect PLC to the existing Plant Network. All fiber optic cable shall be provided and connected under this Section. The fiber optic cable shall be single-mode with six glass fibers, Loose tube, single jacket, steel armored black jacket. Fiber optic cable shall be Superior Essex TeraGain multimode fiber or approved equal.

2) Fiber optic cable shall be tested for optical loss in accordance with Standard Fiber Optic Cable OTDR Test procedures and verified to have an optical loss below that required to perform optimum communications throughput. All new fiber optic cable shall be installed and terminated by Company specializing in the area.

d. Provide fiber optic connector type to match City Standard. Provide six spare connectors. All active and spare fiber optic cables shall be terminated with spider fan-out kits.

e. CAT 6 Cable

1) CAT 6 communication cable in underground (UG) conduit shall meet the following requirements:

a) TIA/EIA-568.C.2 Category 6 Specifications.

b) #24 AWG solid bare copper conductor, 4 or 25 pair shielded twisted pair per “Conduit & Wire Routing Schedule”.

c) Rated for direct burial application.

d) 600V rating.

e) Insulation: Solid Polyolefin.

f) Filling compound: 80°C extended thermoplastic rubber.

g) Outer Jacket: Black, water and UV resistant polyethylene.

h) Electrically continuous aluminum shield.

i) Communication cable shall be Superior Essex or approved equal.

2) Indoor CAT 6 communication cable meet the following requirements:

a) TIA/EIA-568-B Category 6 specifications.

b) #24 AWG solid bare copper conductor, 4 twisted pairs.

c) Thermoplastic Dielectric type.

d) Shielded bulk cable.

e) PVC jacket.

f) UL listed.

g) 600V rated.

h) Non-plenum usage rated when routed in conduit.

i) Plenum usage rated when routed in plenum spaces.

E. Color Code

1. The color code of all wire shall conform with the following table:

WIRES COLOR CODE TABLE

DESCRIPTION	**PHASE/CODE LETTER**	**FIELD WIRE OR TAPE COLOR**	**NON-FIELD WIRE COLOR**
480 V, 3 PHASE	A	BROWN	BROWN
	B	ORANGE	ORANGE
	C	YELLOW	YELLOW
240 V or 208 V, 3P	A	BLACK	-
	B	RED (ORANGE if high leg)	-
	C	BLUE	-

DESCRIPTION	PHASE/CODE LETTER	FIELD WIRE OR TAPE COLOR	NON-FIELD WIRE COLOR
240 / 120 V, 1 P	L1	BLACK	BLACK
	L2	RED	-
12V POSITIVE	12P	DARK BLUE	DARK BLUE
12V NEGATIVE	12N	BLACK/RED STRIPE	BLACK/RED STRIPE
24V POSITIVE	24P	PINK	PINK
24V NEGATIVE	24N	BLACK	BLACK
AC CONTROL (Not Neutral)		VIOLET	RED (YELLOW FOR FOREIGN CIRCUITS)
DC CONTROL		LIGHT BLUE	LIGHT BLUE
NEUTRAL	N	WHITE	WHITE
GROUND	G	GREEN	GREEN
SHIELDED PAIR	+ -	CLEAR (WHITE) BLACK	CLEAR (WHITE) BLACK

2. All wires #8 and below shall have wire insulation the color specified. Wires #6 and larger may be black with color tape.

3. No other colors shall be used without prior approval of the City.

4. The same color shall be connected to the same phase throughout the panel.

5. All wires shall be properly fused or protected by a breaker at the amperage rating allowed by the NEC.

6. Neutral wires used for AC Control shall be White per NEC.

F. Wire Marking

1. Wire identification - all wires, field and interior to equipment, shall be identified with machine printed sleeve markers. Hand lettered wire labels and clip-on markers are not acceptable and shall be replaced at the Contractor's expense. The wire labeling code for each end of the same wire shall be identical. Tubing shall be sized for the wire and shrunk into place with the properly sized heat gun. Labels shall not be wrap-around or snap-on type.

2. The wire identification code for field and panel wiring shall be the number/letter designated on the "Contract elementary" and "Supplier loop" diagrams. Wire labels shall be T&B SM series, Pass & Seymour CAB3, or approved equal.

3. Wire labeling may be omitted on locally interconnected neutral wires such as jumpers between adjacent auxiliary relay coil neutral terminals. "Locally" is defined as wires no longer than 8".

4. Wire labels for lighting and receptacles shall be installed and consist of the panelboard and circuit number (i.e., Panelboard “LP1”, circuit breaker #3 would

have wire label line “LP1-L3” and neutral “LP1-N3”).

5. All spare wires shall be labeled with equipment number followed by X1, X2, etc. (i.e., P11001-X1 for first spare wire).

6. Ethernet patch cables and fiber cables shall be labeled with devices it is connected to (i.e. “PLC/E-Switch A”, “OI/E-Switch A”, “Radio/PLC” etc.). Label shall be white plastic with black machine printed lettering as produced by a KROY or similar machine with lettering no smaller than 3/8”. Securely attach to cable with clear tape.

G. Terminal Blocks and Fuses

1. Control Panel Terminal Blocks

a. Terminal blocks to be clamp type, 6mm spacing, 600 volt, minimum rating of 30 amps, and mounted on DIN rail, Phoenix Contact, Entrelec, or approved equal. DIN rail shall be same type as used for the relays. Install an extra DIN rail on each type of terminal strip with 20% spare terminals for future additions.

b. Provide terminal blocks with "follower" plates that compress the wires and have wire guide tangs for ease of maintenance. Terminal blocks that compress the wires with direct screw compression are unacceptable. All power, control and instrument wires entering and leaving a compartment shall terminate on terminal blocks with wire numbers on terminals and on both ends of the wires.

c. Terminal Tags and Markers: Each terminal strip shall have a unique identifying alphanumeric code at one end. Numbers shall be assigned to all blocks except grounding blocks. Fuse blocks shall be assigned unique tag numbers such as FU1, FU2. No two fuses shall be assigned the same tag number. Terminal blocks are to be labeled to match the wire landed.

d. Plastic marking tabs shall be provided to label each terminal block. These marking tabs shall have a unique number/letter for each terminal which is identical to the "elementary" and "loop" diagram wire designation. Numbers on these marking strip shall be machine printed and 1/8 inch high minimum.

e. Terminal blocks shall be physically separated into groups by the level of signal and voltage served. Power and control wiring above 100 volts shall have a separate group of terminal blocks from terminal blocks for wiring below 100 volts, intermixing of these two types of wiring on the same group of terminal blocks is not allowed.

f. Provide a ground terminal or connection point for each grounding conductor.

g. Provide a separate terminal block for every two neutral terminations or as coordinated with the interconnect diagrams.

2. MCC – Motor Starter Cubicles Terminal Blocks

   a. MCC cubicle terminal blocks shall be pull-apart as supplied standard by MCC manufacturer.

3. Power Termination Blocks shall be rated for 600V main power connection. The power termination blocks shall be rated to accept Copper or Aluminum cable rated as shown on Contract one-line diagrams. The power termination block shall be capable of being mounted anywhere in a termination box. Each termination block shall be provided with lug shield to prevent contact with power connections. The power termination blocks shall be Connectron or approved equal.

H. Fuses

1. Fuses used in circuits 200 VAC and above shall be time- delay type FNQ or approved equal, 13/32" x 1-1/2", and have an interrupting rating of 10,000 AIC at 500 VAC. Fuse holders shall be of the barrier type and rated 600 VAC.

2. Fuses used in 120 VAC circuits shall be fast-acting type CC or approved equal, 13/32" x 1-1/2", and have a rating of 250 VAC. Fuse-holders shall be of the terminal block type.

3. Fuses used in signal and 24 VDC circuits shall be 5mm x 20mm and have a rating of 250 VAC. Fuse-holders shall be of the terminal block type.

4. Fuses shall be sized in conformance with the NEC.

I. Panel Ground

1. Each electrical, control and instrumentation panel shall be provided with a 1 inch x 0.25 inch x 8 inch (minimum size) solid copper grounding bus bar, mounted on the inside of the enclosure. The grounding bar shall be mounted on insulated standoffs so that no electrical connection is made between the ground bar and the cabinet through the mounting. The ground bar shall be drilled and tapped for a 0.25-20 screws at 0.5 inch interval along its entire length.

2. An un-insulated solid copper #8 AWG ground wire shall be attached between the ground bar and the panel enclosure, and between the ground bar and the mounting panels. The ground connection to the enclosure and panel shall be made by sanding the paint finish off a small area, drilling a hole for a 0.25 inch bolt and mounting a 0.25-20 bolt to the panel to serve as grounding stud. The grounding stud shall be attached with a nut and flat washers on both sides of the enclosure/panel, and with an inside tooth star lock washer next to the panel surface. The star lock washer shall be on the inside surface of the enclosure, and the front surface of the mounting panel. The grounding wire shall be secured to the stud with a nut and inside tooth star lock washer. These grounding points shall be located within 12 inches of the bottom to the grounding bar. Each terminal strip rail shall be individually grounded by means of a #12 AWG wire to the ground bus.

EXECUTION

2.02 WORKMANSHIP

A. All work in this Section shall conform to the codes and standards specified in Section 16010 - Electrical.

B. The Supplier shall employ personnel that are skilled and experienced in the installation of wire electrical devices, accessories, and assemblies. All installation labor shall be performed by qualified personnel who have had experience on similar projects. Provide first class workmanship for all installations.

C. Ensure that all equipment and materials fit properly in their installations.

D. Perform any required work to correct improper installations at no additional expense to the City.

2.03 INSTALLATION

A. System

1. Install all products per 16010 - Electrical, INSTALLATION, GENERAL.

2. The panels shall be completely factory wired and tested before shipment.

3. All spare PLC input / output points shall be wired to terminal blocks.

4. A minimum of 20% spare unwired terminals shall be provided in each panel.

5. Lace tie with cord, minimum length 2', each wire bundle entering any enclosure, vault, pullbox, cable tray or any other enclosure. Place label with conduit number associated with wire on each of these bundles when there is no place to attach label to conduit. Labels for each cord shall be similar to the engraved circular tag type specified in Section 16110 or approved equal.

6. Pulling lubricant shall be used when installing all wire in conduits.

B. Wiring Methods

1. Wiring Separation: Wires carrying 100 volts and above shall be physically separated from lower voltage wiring by using separate bundles or wire ways with sufficient distance to minimize the introduction of noise, crossing only at 90 degree angles.

2. Harness: All wiring shall be neatly bundled and laced with plastic tie-wraps, anchored in place by screw attached retainer. Where space is available, all wiring shall be run in slotted plastic wire ways or channels with dust covers. Wire ways or channels shall be sized such that the wire fill does not exceed 60%. Tie-wraps shall be T&B TY-RAP, or approved equal. Wiring inside of conduit, plastic wire duct, duct bank Sections or corrugated loom tubing is not to be wire tied or taped together.

3. Hinge Loops: Where wiring crosses hinged surfaces, provide a “U" shaped hinge loop protected by black or white nylon spiral wrap as manufactured by Panduit # CLT100N-C630, Greybar or approved equal. The hinge loop shall be of sufficient length to permit opening and closing of the door without stressing any of the terminations or connections.

4. Retainers: Wire ways, retainers, and other devices shall be screw-mounted with round-head 316 stainless steel screws or mechanically mounted by push-in or snap-in attachments. Glue or sticky back attachment of any type or style shall not be used. Retainers shall be T&B TC series, or approved equal.

5. Routing

   a. Wires shall be routed in slotted plastic wire-ways with snap covers. Wires carrying 120 VAC shall be separated as much as possible from other wires and signal cables, and shall be routed only in ducts for 120 VAC. If the power wiring has to cross the signal wiring, the crossing shall be as close to a right angle as possible.

   b. Ducts for 24 VDC wiring shall be used for all other wires and cables. Routing of 120 VAC in combined ducts shall be minimized.

   c. Wires and cable shall be routed along the shortest route between termination points, excepting routes which would result in routing 120 VAC and other wires and cables in the same duct. Wires and cables shall have sufficient length to allow slack and to avoid any strain or tension in the wire or cable.

   d. Wires and cables shall be placed in the ducts in a straight, neat and organized fashion and shall not be kinked, tangled or twisted together. Additional wire ducting shall be provided for use by the electrical subcontractor for routing field wires to their landing points in the each electrical and instrumentation panel.

   e. Wiring not routed in duct work shall be neatly bundled, treed, and laced with plastic ties. Wiring across door hinges shall be carefully made up and supported to avoid straining and chafing of the conductors or from putting any strain on their terminals.

6. Exposed Tie-Wraps: Plastic tie-wraps used in all outdoor or exposed applications shall be sun resistant UV rated for outdoor usage.

7. Terminations: Single wire and cable conductors shall be terminated according to the requirements of the terminal device.

   a. Provide 2” minimum separation between wireway and terminal blocks. Installation of wireways too close to terminal blocks will be required to be completely reworked to the satisfaction of the City.

   b. For captive screw pressure plate type terminals, the insulation shall be removed from the last 0.25 inches of the conductor. The conductors shall be inserted under the pressure plate to full length of the bare portion of the conductor and the pressure plate tightened without excess force. No

more than two conductors shall be installed in a single terminal. All strands of the conductor shall be captured under the pressure plate.

c. For screw terminals, appropriately sized locking forked spade lugs shall be used. Lugs shall be crimp on type that forms gas tight connections. All crimping shall be done using a calibrated crimping tool made specifically for the lug type and size being crimped.

d. On shielded cables, the drain wire shall be covered with insulating tubing along its full bare length between the cable jacket and the terminal lug or terminal pressure plate.

e. For screwless terminals, wire shall be stripped back and inserted per the manufacturer's instructions. When stripping insulation from conductors, do not score or otherwise damage conductor.

f. Heat shrink shall be placed on ends of shielded cable to cover foil.

g. Additional condulets with terminal blocks shall be supplied for wire termination to devices with leads instead of terminals (i.e. solenoid valves, level probe, etc.).

h. Terminate all status, control, and analog I/O wiring on terminal blocks, including spares. Provide additional relay, DIN rails, terminal blocks and side panels as required.

8. Spare Terminals: Provide a minimum of 20% spare terminals in all MCC cubicles, electrical and instrumentation enclosures, and instrumentation/control panels.

C. Minimum wire bending space at terminals and minimum width of wiring gutters shall comply with NEC Tables 373.6(A) & (B).

D. Wire sizes shall not be installed smaller than those shown in NEC Article 310 for each circuit amperage rating.

2.04 WARRANTY

A. Provide warranty as specified in Section 16010- Electrical, WARRANTY.

END OF SECTION

(THIS PAGE LEFT BLANK INTENTIONALLY)

SECTION 16250

AUTOMATIC TRANSFER SWITCH

PART 1 - GENERAL

1.01 SCOPE OF WORK

A. The Contractor shall supply along with complete startup and testing services for the automatic transfer switch (ATS) as specified herein. This document describes the function and operation of the system and particular components, but does not necessarily describe all necessary devices. All components and devices shall be furnished and installed as required to provide a complete operable and reliable system for accomplishing the functions and meeting the performance set forth hereinafter.

B. Furnish all required labor, materials, safety equipment, transportation, test equipment, incidentals and services to provide a complete and operational ATS as described in these Specifications, or required for fully operating facility.

C. Work includes that specified in Division 16.

D. The ATS scope of work includes:

1. Providing and installing automatic transfer switch at location shown.
2. Installation of the complete ATS.
3. Installation of surge suppressor as specified in Section 16480 – Motor Control Center.
4. Submittal data and drawings.
5. Startup assistance.
6. Testing.
7. Operation and maintenance manuals.
8. Warranty of all components of the automatic transfer switches.

1.02 SUBMITTALS AND DRAWINGS

A. Provide Submittals and Drawings as specified in Section 16010 - Electrical.

1.03 OPERATION AND MAINTENANCE MANUALS

A. Provide operation and maintenance manuals as specified in Section 16010 - Electrical.

1.04 SUPPLIERS AND/OR MANUFACTURERS SERVICES

A. Prices for the ATS shall include the following services of technical representatives at the job site. The number of hours and scope of services indicated are minimum requirements not including travel time. Time for travel and all associated expenses shall also be included in the bid price for the work.

1. 4 Labor hours - Installation assistance, inspection, and functional testing.

2. 4 Labor hours - Equipment startup and training.

PART 2 - MATERIALS

2.01 AUTOMATIC TRANSFER SWITCH

A. Open Transition Switch Unit:

1. The switch shall be true double-throw with inherently interlocked construction. The switch shall be mechanically interlocked to ensure only one of two possible positions, normal or emergency.

2. Wide contact gaps shall be provided to ensure positive isolation of the normal and emergency power sources.

3. The switch shall be rated to withstand symmetrical short circuit current at the ATS terminals in combination with normal or emergency feeder breakers rated equal to or greater than RMS symmetrical amperes shown on Contract Drawings.

4. The switch shall be fully rated at amperage as shown on Contract Drawing, when mounted in switchboard/pedestal, for switching all types of loads, including induction motors, at the specified amperage and voltage.

5. Switches that are not rated for continuous duty, repetitive switching of all types of loads or transfer between two active power sources, are not acceptable.

6. The main power contacts shall have silver alloy construction with wiping action and shall be protected by arc chutes or arcing contacts.

7. The main contact design shall allow repeated making and breaking of full load current, in a combination of motor and other loads, without damage to the main contacts.

8. All main power contacts and auxiliary contacts shall be mechanically attached to a common actuator shaft.

9. The operating transfer time shall be adjustable time delayed open transition type with intentional load disconnect position for an adjustable period of time when transferring from Utility to generator or from generator to Utility sources.

10. Silver plated copper shall be used in the construction of the bus work.

11. Inspection of all contacts (movable and stationary) linkages and moving parts shall be possible from the front of the switch without disassembly of operating linkages and without disconnection of power conductors.

12. All switch and relay contacts, coils, mechanical linkages, and control elements shall be serviceable or removable from the front of the mounted switch and accessory assembly without removal of the switch or assembly from the compartment and without disconnection of the power cables or control wiring.

13. The switch shall have a manual operating handle for maintenance purposes.

14. Screw type solderless terminals or lugs shall be provided for connecting all external line & load power cables and control wiring. All connections shall be accessible from the front without removal of internal components.

15. A terminal strip shall be provided for terminating all control wiring. Number all terminals with machine printed lettering matching the wire number of the terminated wire.

16. All control wiring shall have permanent identification at each point of connection. Wire identification shall be by machine printed numbered wiring sleeves. Electrically common wires shall have the same wire number. Electrically different wiring shall have unique wire numbers.

17. Control wiring shall be neatly bundled and secured in place by plastic cable ties. Wiring shall be protected with plastic spiral wrap where it is subject to mechanical damage or crosses over to a hinged door.

18. The switch assembly shall be in an enclosure as shown on Contract E-Series Drawings. in a free standing switchboard enclosure with code gauge fully finished steel with rust resistant primer and two coats of baked enamel paint, the ATS manufacturer's standard grey color.

19. The automatic transfer switch shall be an ASCO Model 7000, with options to meet specified requirements, Zenith or approved equal. Breaker type ATSs are not acceptable.

B. ATS CONTROL PANEL

1. A control panel shall be provided to direct the operation of the transfer switch. The modules sensing and logic shall be a controlled by a built-in microprocessor. Control panels that do not utilize microprocessor electronics to control the operation of the switch are not acceptable.

2. A microprocessor based control panel shall be provided to direct the operation of the transfer switch. The control panel shall have a keyboard, LED display and LED status lights.

3. The transfer switch control panel shall be mounted separately from the transfer switch and shall be supplied with a quick disconnect plug for ease of maintenance.

4. The control panel shall meet or exceed the voltage surge withstand capability in accordance with IEEE Standard C446) and NEMA Standard ICS1-109.21.

5. The phase failure or undervoltage of each phase of the normal power source shall be monitored.

6. The under-voltage of each phase of the normal source shall be monitored, with pickup adjustable from 85% to 100% of nominal and the dropout adjustable from 75% to 98% of pickup setting, both in increments of 1%. These adjustments shall be factory set at 85% dropout, and 90% pickup.

7. The voltage of each phase of the emergency source shall be monitored, with pickup adjustable from 85% to 100% of nominal. This adjustment shall be factory set at 95% pickup.

8. Frequency sensing of the emergency source shall be provided, with pickup adjustable from 90% to 100% of nominal. This adjustment shall be factory set at 97% pickup.

9. The control panel shall include the following field adjustable time delays:
    a. Time delay to override momentary normal source outages, adjustable from 0 to 6 seconds.
    b. Transfer to emergency time delay for controlled timing of load transfer to emergency, adjustable from 0 to 60 minutes. This adjustment shall be field set to place emergency generator on-line in 2 seconds.
    c. Emergency source failure time delay to ignore momentary transients during initial generator set loading, adjustable from 0 to 4 seconds. Set at 2 seconds.
    d. Retransfer to normal time delay, adjustable 0 to 9 hours. This adjustment shall be factory set at 5 minutes. The time delay is automatically bypassed if the emergency source fails and normal source is acceptable.
    e. Unloaded running time delay for emergency engine generator cooldown, adjustable from 0 to 60 minutes. This adjustment shall be factory set at 5 minutes.
    f. Delayed transition time delay for setting the dead time when all power is removed from the load side of ATS, adjustable 0 to 5 minutes. Set at 5 seconds.
    g. Generator Exercise Timer: Timer provided for operator adjustment of day of week, time of day and run duration for exercising the generator under operating loads by activating the automatic transfer switch. This timer shall be field set by the Contractor with date and time as specified by City. Timer shall be mounted on the ATS outer deadfront door.
    h. Commit-to-start engine which requires the engine to reach proper output and run at least the duration of the cooldown setting, regardless of whether the load is transferred.
10. Contacts shall be provided for starting the engine when the normal source fails. The contacts shall be double pole double throw (DPDT), and compatible with low voltage engine start signals.
11. Provide Auto/Test switch to provide test operation of the ATS by simulating a loss of the Normal Power Source. Provide signal lights and control switch as shown on Contract MCC elevation drawing.
12. Two auxiliary contacts shall be provided. One that closes when the switch is in the normal position and one that closes when the switch is in the emergency position. These auxiliary contacts shall be rated 1 amp at 120 volts.
13. LED display to show voltage of each phase and frequency. This display shall also show timer setpoint values, which can be changed with keypad.
14. Circuitry shall be provided to allow for connection of a remote contact to inhibit transfer to emergency source and/or retransfer to normal source, ignoring the associated timing relays.
15. All adjustments shall be fully field adjustable without the use of tools, meters, power supplies, or special test equipment.
16. Each adjustment resolution shall be settable within minimum increments of 1%.

17. Repetitive accuracy of timer, voltage and frequency settings over a temperature range of –20° C to 70° C shall be within +/-2%.

18. The control panel shall be arranged such that adjustments to time delay settings can be safely made without personal exposure to live parts.

19. The control panel and power terminals shall be completely covered to protect against accidental contact, foreign matter and tampering.

20. The wire harness for connection of the control panel to the transfer switch shall have sufficient length to reach between the mounting locations shown on the design Drawings.

21. Provide the following displays on the controller display unit with keypad:

    a. Event log to display 99 logged events with the time and date of the event, event type and event reason.

    b. Total number of ATS transfers.

    c. Number of ATS transfers caused by power source failures.

    d. Total number of days ATS has been in operation.

    e. Total number of hours that the normal and emergency sources have been available.

    f. Each phase voltage and amperage.

22. Provide vents with removable metal filters.

23. Where possible, pilot devices, operator devices etc. shall be maximum of 66" above finished floor.

PART 3 - EXECUTION

3.01 WORKMANSHIP

A. All work in this Section shall conform to the codes and standards specified in Section 16010 – Electrical.

B. The Supplier shall employ personnel that are skilled and experienced in the startup and testing of ATS and its accessories, and assemblies. All installation labor shall be performed by qualified personnel who have had experience on similar projects. Provide first class workmanship for all installations.

C. Ensure that all equipment and materials fit properly in their installations.

D. Electrical Section 16010 – General Construction Methods and General Equipment Fabrication apply to the construction and assembly of the automatic transfer switch.

E. Perform any required work to correct improper installations at no additional expense to the City.

F. Provide nameplates as shown on Contract drawings.

3.02 INSTALLATION

A. The installation methods specified herein shall be followed by the Supplier of the automatic transfer switch. If the Supplier fails to comply with these installation methods, then the Contractor shall pay all costs required to make the changes to the equipment to conform with these installation methods.

B. All connections shall be accessible from the front without removal of internal components.

C. Terminal strips shall be provided for terminating all interconnect wiring except for prefab cable connectors. All terminals shall be labeled.

D. All wiring shall have permanent identification at each point of connection. Wire identification shall be by machine printed numbered wiring sleeves. All Wires shall have labels.

E. Wiring shall be neatly bundled and secured in place by plastic cable ties. Wiring shall be installed and protected with corrugated loom tubing where it is subject to mechanical damage or crosses over to a hinged door.

F. All lugs shall be copper sized for wires listed in the Conduit and Wire Routing Schedule.

3.03 FIELD TESTS

A. Provide field testing as associated with Section 16010 – Electrical and 16210 – Diesel Generator.

B. All time delays and programmable settings shall be set in the field by the Supplier to the settings as directed by the City at no additional cost.

3.04 WARRANTY

A. Provide warranty as specified in Section 16010 – Electrical, WARRANTY.

END OF SECTION

SECTION 16426

MAIN SWITCHBOARD

PART 1 - GENERAL

1.01 SCOPE OF WORK

A. The Contractor shall supply along with complete startup and testing services for the Main Switchboard as specified herein. This document describes the function and operation of the system and particular components, but does not necessarily describe all necessary devices. All components and devices shall be furnished and installed as required to provide a complete operable and reliable system for accomplishing the functions and meeting the performance set forth hereinafter.

B. Furnish all required labor, materials, safety equipment, transportation, test equipment, incidentals and services to provide a complete and operational power distribution system as described in these Specifications, or required for fully operating facility.

C. This Section Scope of Work includes that specified in Division 16.

D. The main switchboard scope of work which includes both the furnishing and installation:

1. Main Switchboard.
2. Utility system consisting of transformer pad, bollards, primary & secondary conduits, etc.
3. Submittal data and drawings.
4. Startup assistance.
5. Testing and training.
6. Operation and maintenance manuals.
7. Warranty of all components.
8. Coordination with Power Company.
9. Provide trenching, backfilling, and compaction for all underground conduit routes, concrete pads, and pull boxes.

1.02 SUBMITTALS AND DRAWINGS

A. Provide submittals and drawings as specified in Section 16010 - Electrical.

B. Submittals for the Electric Service shall include, but shall not be limited to, the following:

1. All primary and secondary utility service materials (pullboxes, transformer pads, conduits and bollards). These materials shall also be submitted to and approved in writing by Utility service.
2. Switchboard and meter/main outline and dimensional drawings and conduit entry area baseplans.
3. Nameplate designations, sizes and mounting methods.

4. Ratings and characteristics including voltage ratings, bussing arrangements, continuous current ratings, fault current withstand ratings, neutral bus rating, ground bar termination points, ratings and arrangement of overcurrent protective devices.

5. Provide catalog cuts of all devices used.

6. Provide seismic anchoring calculations and methods.

7. Circuit breaker time-current curves and settings.

8. Provide written statement from utility Engineer for project, stating approval of all proposed utility metering service materials, protective devices, metering provisions, and bus duct.

1.03 OPERATION AND MAINTENANCE MANUALS

A. Provide operation and maintenance manuals as specified in Section 16010 - Electrical.

PART 2 - MATERIALS

2.01 MAIN SWITCHBOARD

A. General:

1. Furnish a free-standing, dead-front type, main switchboard with utility metering breakers, and other devices shown on Contract Elevation diagrams. Voltage and amperage rating shall be as shown on Contract Drawings. It shall consist of the required number of vertical sections shown on Contract Drawings bolted together to form a rigid assembly.

2. The main switchboard shall comply with the latest applicable standards of NEMA PB-2 and UL Standard 981. The assembly shall bear a UL label.

3. The main switchboard shall be suitable for use as service entrance equipment and be labeled in accordance with UL requirements.

4. Small wiring, necessary fuse blocks and terminal blocks within the switchboard shall be furnished as required. Control components mounted within the assembly, such as fuse blocks, relays, pushbuttons, switches, etc., shall be suitably marked for identification corresponding to appropriate designations on manufacturer's wiring diagrams.

5. The assembly shall be provided with adequate lifting means and shall be capable of being moved into installation position and bolted directly to the floor without the use of floor sills. All necessary hardware to secure the assembly in place shall be provided by the Contractor.

6. The switchboard shall be arranged as shown on Contract Drawings. If the proposed meter arrangements are significantly different than those shown on the Contract Drawings, then the Contractor shall consult with the Engineer and provide proposed layout and catalog cuts prior to first submittal.

7. The switchboard manufacturer shall cooperate with the Contractor by promptly supplying dimensional or other required information prior to delivery of equipment.

8. Provide larger size breaker lugs or breaker frame to land wires specified in "Conduit and Wire Routing Schedule" is standard lugs will not accept wire specified. Larger lugs or breaker frame shall be provided at no additional cost to City. All lugs shall be copper.

9. The switchboard shall be manufactured by Eaton, Square D, ITT, or approved equal.

B. Construction:

1. The switchboard shall be NEMA rated as shown on Contract Drawing and constructed of code gauge galvanized steel fully finished with two coats of baked enamel paint with color to match that of the MCC. Provide Switchboard with NEMA 3R weather wrap where shown on Contract Drawings.

2. All sections of the switchboard shall align front and rear with depth as shown on the Drawings. Front access shall allow for installation, maintenance and servicing of all components. Switchboards requiring back or side access are not acceptable.

3. All edges of front covers or hinged front panels shall be formed.

4. All control wire shall be type THWN, bundled and secured with nylon ties. Insulated locking spade terminals shall be provided for all control connections, except where saddle type terminals are provided integral to a device. All current transformer secondary leads shall first be connected to conveniently accessible short circuit terminal blocks before connecting to any other device. All groups of control wires leaving the switchboard shall be provided with terminal blocks with suitable numbering strips. Provide wire markers at each end of all control wiring.

5. Provide removable metal filters on all vents.

6. Top of operator interface (pilot devices / breaker) to be maximum 66" above finished floor. Cubicles with switch disconnects shall be mounted no higher than 60" above finished floor.

C. Short Circuit Rating:

1. The complete bus assembly and breakers shall be rated to withstand mechanical forces exerted during short circuit conditions when connected directly to a power source having available fault current listed on Contract One Line Drawings.

D. Bussing:

1. All bus bars shall be tin plated copper. Bus sizing shall be based on NEMA standard temperature rise criteria of 65° C over a 40° C ambient (outside the enclosure).

2. Provide a half capacity neutral bus where a neutral bus is indicated on the Drawings.

3. A tin plated copper ground bus shall be furnished firmly secured to each vertical section structure and shall extend the entire length of the switchboard.

4. All hardware used on conductors shall be high-tensile strength and zinc plated. All bus joints shall be provided with Bellville washers.

E. Circuit Breakers:

1. Each breaker shall be three-pole unit, molded case circuit breaker with thermal

magnetic (TM) overcurrent device with Long, Short, Instantaneous, and Ground (LSIG) trip unit when shown. Breaker arrangement, trip, and frame ratings shall be as shown on Contract one-line diagram.

2. Each breaker shall have a hasp for padlocking the breaker in the OFF position.

3. Circuit breakers with a frame size of 450 amperes to 1200 amperes shall be molded case with electronic microprocessor based RMS trip elements. Molded case circuit breakers with electronic trip shall be Eaton Series C N-Frame Type NG-H with Digitrip 310+ Electronic ALSIG trip unit, or equal. The interrupting capacity of all main, and feeder branch circuit breakers shall be a minimum of 65,000 RMS symmetrical amperes at operating voltage.

4. Main breaker trip unit shall be equipped with 24 VDC coil for "Maintenance Mode" for arc flash reduction when shown. Maintenance mode selection switch (Maintenance Mode or Normal Mode selection) shall be installed on Switchboard face near main breaker. 24 VDC supply shall come from PLC Panel.

5. Provide all pilot devices with descriptive engraved nameplates.

6. Circuit breakers shall be Eaton, GE or approved equal.

F. Testing

1. The switchboard shall be completely assembled, wired and tested at the factory. After assembly, the complete switchboard will be tested for operation under simulated service conditions to assure the accuracy of the wiring and the functioning of all equipment. The main bus shall be given a dielectric test of 2200 volts for one minute between live parts and ground and between opposite polarities. A certified test report of all tests shall be submitted to the City for approval before shipment from factory.

PART 3 - EXECUTION

3.01 WORKMANSHIP

A. All work in this Section shall conform to the codes and standards specified in Section 16010 - Electrical.

B. The Supplier shall employ personnel that are skilled and experienced in the startup and testing of a main switchboard service equipment and accessories. All installation labor shall be performed by qualified personnel who have had experience on similar projects. Provide first class workmanship for all installations.

C. Ensure that all equipment and materials fit properly in their installations.

D. Electrical Section 16010 - General Construction Methods and General Equipment Fabrication apply to the construction and assembly of the main switchboard.

E. Perform any required work to correct improper installations at no additional expense to the City.

F. All equipment installed by the Contractor shall be in accordance with the Drawings and the manufacturer's recommendations & instructions, and shall operate to the Engineer's satisfaction. Follow all manufacturer's instructions for handling, receiving, installation, and pre-check requirements prior to energization. After energization, follow manufacturer's instructions for programming, set-up, and calibration of breakers. The

Contractor shall be responsible for, and shall correct by repair or replacement, at his own expense, equipment which, in the opinion of the Engineer, has been caused by faulty mechanical or electrical assembly by the Contractor. Necessary tests to demonstrate that the electrical and mechanical operation of the equipment is satisfactory and meets the requirements of these Specifications shall be made by the Contractor at no additional cost to the City.

3.02 CONSTRUCTION

A. The construction methods specified herein shall be followed by the Supplier of the main switchboard. If the Supplier fails to comply with these installation methods, then the Contractor shall pay all costs required to make the changes to the equipment to conform with these installation methods.

1. All connections shall be accessible from the front without removal of internal components.

2. Terminal strips shall be provided for terminating all interconnect wiring except for prefab cable connectors. Terminals shall be labeled per Section 16120 - Wire, Fuses & Terminal Blocks.

3. All wiring shall have permanent identification at each point of connection. Wires shall be labeled per Section 16120 - Wire, Fuses & Terminal Blocks.

4. Wiring shall be neatly bundled and secured in place by plastic cable ties. Wiring shall be protected with plastic spiral wrap where it is subject to mechanical damage or crosses over to a hinged door.

5. Utility pull rope shall have distance markers every one (1) foot along entire length of pull rope. Size of pull rope shall be per Utility requirements.

3.03 INSTALLATION

A. The Contractor shall coordinate all work with the serving power Utilities, and notify the Utility Company when service is required. The Contractor shall arrange a pre-construction meeting with the Utility representative prior to start of any Utility related work. The Contractor shall obtain the required inspections.

B. Utility will be responsible for furnishing and installing all transformer high voltage primary cabling.

C. Switchboard Supplier shall provide all required transformer secondary cabling and lugs at Main Switchboard to match Secondary cabling.

D. Install pull ropes in each Utility primary and secondary conduits. Pull ropes shall have distance markers every one (1) foot along entire length of pull rope. Size and material for pull rope shall be per Utility requirements.

3.04 FIELD TESTS

A. Provide field testing as specified in Section 16010 - Electrical.

B. Breakers shall be set to values determined by Switchboard Supplier. Switchboard shall not be energized until breakers have been set and field tested and Engineer has given written approval.

3.05 WARRANTY

A. Provide warranty as specified in Section 16010 – Electrical, WARRANTY.

END OF SECTION

(THIS PAGE LEFT BLANK INTENTIONALLY)

SECTION 16470

PANELBOARD AND PANELBOARD TRANSFORMER

PART 1 - GENERAL

1.01 SCOPE OF WORK

A. The Contractor shall supply the panelboard and panelboard transformer shown on the Contract Drawings and as specified herein.

B. Furnish all required labor, materials, safety equipment, transportation, test equipment, incidentals and services to provide complete and operational panelboard and panelboard transformer as described in these Specifications and required for fully operational facility.

C. Work includes that specified in Section 16010 - Electrical.

D. The panelboard and panelboard transformer scope of work includes:

1. Providing panelboard and panelboard transformer.
2. Installation of panelboard and panelboard transformer at location shown on Drawings.
3. The quantity of breakers with size and number of poles as shown on panelboard schedules.
4. Submittal data and Drawings.
5. Startup assistance.
6. Testing.
7. Operation and maintenance manuals.
8. Warranty of all components of the panelboard and panelboard transformer.

1.02 SUBMITTALS AND DRAWINGS

A. Provide data and Drawings for all materials furnished under this Section with the content and format as specified Section 16010 - Electrical.

B. Provide ratings and characteristics including voltage ratings, busing arrangements, continuous current ratings, fault current withstand ratings, neutral bus rating, ground bar termination points, ratings, and arrangement of overcurrent protective devices.

C. Provide catalog cuts for panelboard, circuit breakers and transformer.

D. Submit panelboard schedules for approval.

1.03 OPERATIONS AND MAINTENANCE MANUALS

A. Provide data and Drawings for all materials furnished under this Section with the content and format as specified Section 16010 - Electrical.

PART 2 - MATERIALS

2.01 PANELBOARD

A. General:

1. The Contractor shall furnish each panelboard of a type indicated on the Contract panelboard schedules and specified herein.

2. Panelboard shall comply with the applicable Sections of UL, NEC, and NEMA and be manufactured by the same manufacturer for all panelboard.

3. A removable machine-typed circuit directory with clear plastic cover shall be provided with panelboard and mounted on the inside of door in a frame. Circuit directory shall be as approved in the Submittal and updated or replaced to show as-built breaker identification.

   a. "Sticker" type panelboard schedules are not acceptable.

   b. The directory cards shall be updated prior to final acceptance.

4. Provide panelboard engraved nameplates with ½-inch lettering. Nameplate inscription shall be the panel name listed on the Panelboard Schedule.

5. Panelboard door latches shall be tool-less quarter turn indicating type fasteners

6. Panelboards mounted external of MCCs shall be provided with engraved nameplates listing Panelboard name, voltages, and location feeding it (i.e. "MCC-100 via Transformer XFMR-100", "Power Panel 100", etc.). Engraved nameplate shall be as specified herein.

B. Interior:

1. Factory assembled with bolt-on devices.

2. Full size insulated neutral bus shall be included. Neutral busing shall have a suitable lug for each outgoing feeder requiring a neutral connection.

3. Bus bar shall be copper sized in accordance with UL standards to limit temperature rise on any current carrying part to a maximum of 50° C above an ambient 40° C maximum.

4. A copper ground and neutral bus bar shall be included in panelboard with terminal screws.

C. Trim:

1. Provide hinged door over all circuit breaker handles. Door of panelboard trim shall not uncover any live parts. Door shall have a catch, lock, and trim.

2. Surface of the trim assembly shall be properly cleaned, primed, and a finish coat of gray paint to match MCC color when installed in MCC, otherwise painted to match room décor.

3. Provide panelboard engraved nameplates with ½-inch lettering as specified in Section 16010 - Nameplates. Nameplate inscription shall be the panel name listed on the Panelboard Schedule.

4. Provide circuit number tags next to each circuit breaker, including existing panelboards.

D. Panelboard Ratings:

1. Panelboard shall be rated as shown on the Contract Drawings.

2. Breakers shall be a minimum of 100 ampere frames. Breakers 15 through 100 amperes trip size shall take up the same pole spacing. All panelboard breakers shall be provided with individual padlock hasps (lockable in off position). Provide molded-case breakers with quick-make and quick-break toggle mechanism, inverse-time trip characteristics, and trip-free operation on overload or short circuit. Automatic tripping shall be indicated by handle position between the manual OFF and ON position. Provide trip ratings as indicated in panelboard schedule. Series breakers devices are not allowed to meet interrupt ratings listed.

3. Panelboard shall be labeled with a UL short circuit rating.

E. Space Only:

1. Where "space" is noted on the drawings, provide connectors, mounting brackets, blank covers, etc., for the future insertion of an overcurrent device.

2.02 PANELBOARD TRANSFORMER

A. The panelboard transformer shall be ventilated dry type. Voltage, phase, and KVA ratings shall be as shown on the Contract One-line Drawing. The transformer shall be as manufactured by G.E. Type QL, Eaton, Acme, or approved equal.

B. The transformer shall have 115 °C rise, insulation 220 °C rise Class H insulation system.

C. Transformer shall be installed in locations as shown on Contract Drawings. All transformer installed shall be supplied by the same manufacturer.

D. Vibration isolators shall be installed between the transformer and its mounting surface to reduce case vibration and compensate for slight unevenness of the mount. They shall be sized for the appropriate loading at twice the fundamental frequency. The transformer housing shall be securely fastened to the mounting surface to eliminate possible sound generation.

E. Each transformer shall be finished with two coats of heavy enamel to resist rust and corrosion.

F. Provide an engraved nameplate for each transformer. Nameplates shall have ½" high letters and be engraved with transformer designation as shown on one-line Drawings.

G. Transformer rated 30KVA and above shall have two 2-1/2 percent taps above and below rated voltage.

H. Transformer located inside MCCs shall be provided with adequate ventilation for heat removal as required.

I. Transformer located outdoors shall be provided with NEMA 3R enclosures or UL approved drip shields to obtain a weatherproof rating.

J. Wall mounted transformer shall be provided with appropriate wall mounting brackets. Wall mounted transformer shall be located so as not to block off conduit access to panels and so as not to impede proper working headroom and clearances.

K. Floor mounted transformer shall have a 3-1/2” concrete housekeeping pad.

L. Transformer shall be mounted with ventilation space from wall or structures as specified by the Transformer Manufacturer.

M. Transformer neutral shall be grounded in accordance with NEC 250.66 and 450.10 and any applicable local ordinances. Installation and protection of the transformer grounding conductors and attachments shall be per NEC 250.24.

2.03 LABELS

A. Provide engraved panelboard nameplates with ½-inch lettering. Nameplate inscription shall be the panel name listed on the Panelboard Schedule.

B. Provide an engraved nameplate for each external transformer per Section 16010.

C. Provide circuit number tags next to each circuit breaker.

PART 3 - EXECUTION

3.01 GENERAL

A. Set taps under load conditions for correct voltage.

B. Install transformer located outside MCC on Korfund Series F or H double-deflection mounts selected for the weight of the transformer, to produce the maximum isolation. Secure with four one-half inch (minimum) diameter stainless steel anchors, minimum 2-1/2" embedment.

C. For floor and wall mounted transformer install with a 6" minimum clearance (or distance required by transformer manufacturer) between transformer and walls.

3.02 WORKMANSHIP

A. All work in this Section shall conform to the codes and standards specified in Section 16010 - Electrical.

B. Ensure that all equipment and materials fit properly in their installations.

C. Perform any required work to correct improper installations at no additional expense to the City.

3.03 FIELD TESTS

A. Provide transformer field testing as specified in Section 16010 – Electrical, TESTING.

3.04 WARRANTY

A. Provide warranty as specified in Section 16010 – Electrical, WARRANTY.

END OF SECTION

(THIS PAGE LEFT BLANK INTENTIONALLY)

SECTION 16480

MOTOR CONTROL CENTER

PART 1 - GENERAL

1.01 SCOPE OF WORK

A. The System Supplier shall customize and supply the motor control centers (MCC) as specified herein. Standard MCCs supplied direct from MCC Manufacturers will not be accepted. This document describes the function and operation of the system and particular components, but does not necessarily describe all necessary devices. All components and devices shall be furnished and installed as required to provide a complete operable and reliable system for accomplishing the functions and meeting the performance set forth hereinafter.

B. Furnish all required labor, materials, safety equipment, transportation, test equipment, incidentals and services to provide a complete and operational MCCs as described in these Specifications, or required for fully operating facility.

C. Work includes that specified in Division 16.

D. The MCC scope of work includes:

1. Providing MCCs, Power Monitor, Surge Suppressor, etc.
2. Installation of the MCC.
3. Installation of concrete pad for MCC.
4. Submittal data and Drawings.
5. Startup assistance.
6. Testing.
7. Operation and maintenance manuals.
8. Warranty of all MCC components.

E. All wiring and terminal blocks within each MCC shall be labeled as specified in Section 16120 – Wires, Fuses, and Terminal Blocks. All neutral wires shall have white insulation.

F. All MCCs shall be wired at System Supplier's facilities. Factory wiring is not acceptable.

G. Footprints of MCCs shown on Contract Drawings were developed based on best available information. It is the Contractor's responsibility to obtain site plans of the location for each MCC, motor starter, control panel, etc. to ensure the supplied equipment is appropriate for the location. Contractor is responsible for any additional conduits, wires, construction costs, engineering design requirements, etc. to accommodate MCC, motor starter, control panel, etc. that are larger than that shown on Contract Documents.

1.02 SUBMITTALS

A. Provide Submittals and Drawings as specified in Section 16010.

B. Complete Short Circuit Study per Section 16605 Electrical System Analysis shall be submitted and approved by Engineer before Engineer will approve submittal for MCC and switchboard equipment.

C. MCC and switchboard equipment shall not be delivered until Protective Device Coordination Study per Section 16605 Electrical System Analysis has been submitted and approved.

D. All submittal drawings shall be prepared by System Supplier. Factory supplied MCC drawings are not acceptable.

1.03 OPERATION AND MAINTENANCE MANUALS

A. Provide operation and maintenance manuals as specified in Section 16010.

B. Include the following in the O&M manuals for the MCC.

1. Record of each motor starter including Manufacturer, full part number, size, etc.

2. Record of each overload heater element size and setting, including Manufacturer full part number, size, etc.

3. Each breaker part number and as-finalized breaker setting.

1.04 SUPPLIERS AND/OR MANUFACTURERS SERVICES

A. Prices for the items specified shall include the following services of MCC supplier's technical representatives at the job site. The number of hours and scope of services indicated are minimum requirements and do not include travel time. Time for travel and all associated expenses shall also be included in bid price for the work.

1. 32 Labor hours per MCC - Installation assistance, field inspection and functional testing.

2. 32 Labor hours per MCC - Equipment setup and startup.

3. Training hours to meet requirements of Section 16010.

PART 2 - MATERIALS

2.01 MOTOR CONTROL CENTERS

A. General:

1. Each motor control center (MCC) shall be built and tested in accordance with:

a. NEMA Standards.

b. ANSI.

c. Underwriter's Laboratories, Inc.

2. Each MCC shall comply with all provisions of UL 845, and bear a separate UL label on each individual MCC Section. In addition, all wiring, devices, and components contained therein, shall be UL labeled for the application. UL approval and labels shall be provided for the individual MCC Sections prior to delivery from the factory. Field UL labeling will not be allowed.

3. MCCs shall be 600 volt class rated to operate from an incoming power as shown on Contract one-line diagrams.

4. MCC construction shall consist of NEMA rated as shown on Contract Drawings deadfront enclosure. MCC shown as NEMA 12 shall be NEMA 1 type, with gasketed doors to reduce dust entry. The height of the MCC shall be 90 inches. MCC fabrication shall be NEMA Class II with NEMA Type B wiring.

5. Each MCC shall be provided with the type, capacity, and ratings of components shown on the Drawings or otherwise specified. The 460 VAC breakers shall be rated to withstand an available fault current shown on Contract Drawings.

6. MCP breakers shall be selected to have trip and breaker size based on the motor full load amps to meet latest NEC. When the MCP breaker size change due to a different motor size and full load amps than that shown on the Contract Drawings, the Contractor shall provide the properly sized MCP breaker at no additional cost to City.

7. Provide extension handles for breakers with center of the grip of the operating handle, when in its highest position, is above 78" from floor in order to conform with NEC 404.8.

8. Where possible, pilot devices, operator devices etc. shall be maximum of 66" above finished floor.

9. MCC components such as relays, starters, breaker, lights, switches, etc. shall meet the requirements of Section 16010.

10. Provide vents with removable metal filters.

B. Qualifications:

1. MCC structures shall provide for all equipment detailed on the single line Drawings including all spares and spaces. Where possible, the MCC shall be built in strict accordance with overall sizing and component layouts as detailed on the Drawings. No deviations will be allowed without prior approval of the City.

2. When physical size requirements for individual components are different than those detailed on the MCC elevation Drawings, the single line Drawing shall supersede the elevation Drawing, and the Contractor shall furnish additional vertical sections based on the City's approval as required to provide for all equipment including spares and spaces at no additional cost to City. The concrete housekeeping pad shall be expanded by Contractor at no additional cost to City when larger MCCs are supplied.

3. MCCs shall have major components and subsystems therein (i.e., breakers, contactors) that are standard for the MCC Manufacturer.

4. All devices and components of a similar type of function located in different MCC cubicles (i.e., VFDs, contactors, control relays, timers, etc.), shall be the product of same Manufacturer throughout.

5. All starters and contactors shall be rated and designated in accordance with NEMA standards. Starters and contactors rated in amperes without Manufacturer's published data indicating the corresponding NEMA sizes will not be acceptable. Submittals shall provide cross-reference data which includes details of the Manufacturer's compliance with NEMA standards and tests.

6. MCCs shall be Eaton 2100 Series or Allen-Bradley customized per Contract

Drawings.

C. Construction:

1. Each MCC shall consist of standard metal-enclosed, freestanding, dead-front and dead-back vertical Sections, not more than 90 inches in height and not less than 20 inches deep. The framework shall be made of 12-gauge steel channels. The composite MCC shall consist of vertical sections that are of equal height. Provide Switchboard with NEMA 3R weather wrap where shown on Contract Drawings.

2. Working height excluding the upper and lower wireways of MCC shall be 72 inches to accommodate compartment spacing in increments of six inches. Minimum compartment height shall be twelve inches.

3. Each Section shall be provided with horizontal top and bottom wireways. Wireways shall be readily accessible and isolated from all busing by grounded steel barriers. The bottom wireways shall have an adequate conduit entrance area and shall not be obstructed by transformers, capacitors, or other devices. The wireways in each section shall line up with wireways in the adjacent sections, with openings between so that wires may be pulled the entire length of MCC.

4. Where shown on the Drawings, isolated vertical wireways shall be provided, each with a separate full height door. Vertical wireways shall intersect the top and bottom horizontal wireways for easy cable routing. Vertical wireways shall have wire hangers for wire tie-down spaced throughout the complete vertical trough. Vertical wireway doors shall be latched by quarter-turn, indicating-type fasteners.

5. Each MCC shall be designed for front access maintenance. All wiring, bus joints, and other mechanical parts requiring tightening or other maintenance shall be accessible from the front. Rear or side access shall not be necessary for inspection or maintenance.

6. All steel work shall be immersion cleaned and phosphated to inhibit rust prior to painting. Paint finish shall be electrostatically applied dry powder, baked to thermoset. MCC compartment interior color shall be white. All other interior and exterior MCC structure surfaces shall be finished in an ANSI 61 or ANSI 49 gray color. No field painting will be allowed except for "touching up" of damaged areas.

7. A Manufacturer's nameplate shall be attached to each MCC giving the model number, serial number, bus amps, voltage, and other Manufacturer's information pertaining to the MCC construction.

8. MCCs shall be furnished completely factory assembled and shipped to the jobsite in shipping sections. Assembly of components into MCC at the jobsite is not allowed (except for connection of shipping section). Removable lifting angles or eyes shall be provided on the top of each MCC shipping section.

9. All fans and louvers shall be provided with removable metal filters.

D. Bus System:

1. All bus material shall be copper. Aluminum buswork is not allowed. All buses, except ground buses, shall be completely isolated by steel plates or insulating material.

2. A continuous horizontal bus shall be furnished and rated as shown on the Drawings.

3. A full length vertical bus shall be furnished in each Section and rated as shown on the Drawings. Current rating shall apply to the full length of the vertical bus, tapered bus shall not be allowed. Vertical buses shall be insulated and isolated with glass polyester or equivalent continuous barriers. Cutouts shall be provided in the barriers for plug-in stab connections. Unused stab openings shall be plugged. Lower ends of vertical buses shall be insulated.

4. Buses shall be sized and braced to withstand a fault of symmetrical amperes listed on Contract one-line drawings. MCC protective breaker(s) shall have an interrupting capacity to isolate a fault current of this magnitude.

5. A copper ground bus shall be provided in the bottom horizontal wireway of each Section. The ground bus shall be rated 300A minimum. It shall be electrically continuous the entire width of each MCC. Provide cable lugs on ground bus for incoming power grounding conductors.

E. Compartments:

1. Compartments shall be isolated from each other by separate horizontal steel plates without openings that are a part of the unit itself. Draw-out units shall totally isolate enclosed equipment. All unused openings to the adjacent vertical wiring space shall be plugged. All openings used for wiring shall have insulating grommets.

2. Doors for each compartment shall be fabricated from formed sheet steel of no less than 14 gauge thickness. The door opening shall be of sufficient size to permit ready removal of any of the devices in the compartment. Doors shall be mounted on adjustable and removable pin type concealed hinges arranged so that compartment doors may be removed without disturbing compartment doors above or below. Door latches shall be quarter turn indicating type fasteners. Panelboard and Control Panel door latches shall be tool less quarter turn indicating type fasteners. Overload relays shall be reset from outside the enclosure by means of an insulated button mounted on the door.

3. An operator mechanism mounted on the draw-out unit shall provide the means for operating the compartment breaker or disconnect switch. The operator shall extend through an opening in the compartment door and shall clearly indicate whether the disconnect is "on", "off" or "tripped". This indication shall function whether the door is open or closed. The operating mechanism shall not be attached to the compartment door.

4. Each compartment for combination starters, breakers, and disconnect switches shall be draw-out construction, containing individual units. Draw-out provisions shall include a positive guide rail system and stab shrouds to absolutely ensure alignment of stabs with the vertical bus. The stabs shall be tin plated copper alloy and shall provide a self-aligning pressure connection. The stab design shall ensure a consistent low-resistance contact with the vertical bus even after repeated insertions and removals. Power wiring to stabs shall be contained within the draw-out unit. No wire shall extend behind the unit.

5. All similar compartments shall have the same structural features and the units

shall be interchangeable.

6. With the disconnect in the "on" position, a mechanical interlock shall prevent opening of the door. This interlock shall be provided with a defeater so that authorized personnel may gain access to the compartment without interrupting service. This interlock shall also prevent unintentional closing of the disconnect when the compartment door is open. A second mechanical interlock shall prevent any possibility of removing or reinserting the draw-out unit while the disconnect is in the "on" position.

7. The operator mechanism shall allow padlocking of the disconnect in the "off" position with up to three padlocks.

8. Compartment interconnect wiring shall be connected to pull apart terminal blocks.

9. Pushbuttons, selector switches, and indicating lights shall mount where shown on the Drawings on a removable device panel which is part of the draw-out unit. The device panel shall not be part of the door.

10. Compartments containing panelboards shall have panelboards installed per Section 16470.

11. Compartments containing motor starters shall each have an overload selection table posted inside the door.

12. MCC compartments labeled as space shall have a blank hinged door and draw out relay panel installed, occupying the full space area.

13. Circuit breakers feeding Soft Starters or VFDs shall have true adjustable Long, Short and Instantaneous trip units.

14. Circuit breakers with a frame size of 450 amperes to 1200 amperes shall be molded case with electronic microprocessor based RMS trip elements. Molded case circuit breakers with electronic trip shall be Eaton Series C N-Frame Type NG-H with Digitrip 310+ Electronic ALSIG trip unit, or equal. The interrupting capacity of all main, and feeder branch circuit breakers shall be a minimum of 65,000 RMS symmetrical amperes at operating voltage.

15. Circuit breaker trip unit shall be equipped with 24 VDC coil for “Maintenance Mode” for arc flash reduction when shown. Maintenance mode selection switch (Maintenance Mode or Normal Mode selection) shall be installed on Panel face near main breaker. 24 VDC supply shall come from PLC Panel.

16. Provide all pilot devices with descriptive engraved nameplates.

17. All metal panel doors shall be installed with ground straps, including all MCC bucket doors.

2.02 SURGE PROTECTIVE DEVICE

A. The surge protective device shall be rated for voltage on a 480V VAC, 3 phase system as shown on Contract Drawings. The transient current the surge protective device shall dissipate 250,000 amps minimum per phase. Provide fuses feeding the surge protective device. Locate surge protective device so that the indicating lights are viewable without removing panels. The surge protective device shall be Eaton SPD, Leviton, or approved

equal.

2.03 POWER MONITOR

A. Meter Module:

1. The meter module shall be a microprocessor-based monitoring and control instrument. The meter module shall accept the following: a 3 phase, 0-5A ac, current signal; and a 3 phase, 0-208V ac, line to line, voltage signal. A 480V to 120 VAC fuse protected switchboard control power transformer shall be provided inside transition section to provide power to meter and display modules. The meter module shall be mounted inside the transition section (not on a door) in a location protected from electrical noise. The meter module shall be connected to the display module via fiber cable.

2. The meter module shall be Eaton, Allen-Bradley Powermonitor 5000 with communication module necessary for data transfer to PLC, or approved equal.

B. Display Module:

1. The display module shall be the display portion of the multi-function meter. The display module shall be used to configure the meter module and display the electrical metered parameters. The display module shall be 120 VAC powered and shall be mounted on the switchboard transition section door.

2. The display module shall be Eaton, Allen-Bradley's Bulletin Powermonitor 5000 Display Module, or approved equal.

C. Provide four (4) port (minimum) managed switch with power monitor system to connect power monitor system to overall Ethernet network

2.04 FLOOR MATS

A. Provide flat, smooth, rubber mats in front of each MCC. Mat shall extend the full length of the MCC section. Mat shall have a minimum width of 36 inches extending out from the front of MCC. The mat supplied shall be specifically made for this insulation/isolation application.

PART 3 - EXECUTION

3.01 SECTION INCLUDES

A. Requirements for testing piping that will operate under pressure.

3.02 WORKMANSHIP

A. All work in this Section shall conform to the safety lockouts, codes and standards specified in Section 16010 - Electrical.

B. The Supplier shall employ personnel that are skilled and experienced in the startup and testing of all elements, equipment, devices, instruments, accessories, and assemblies. All installation labor shall be performed by qualified personnel who have had experience on similar projects. Provide first class workmanship for all installations.

C. Ensure that all equipment and materials fit properly in their installations.

D. Electrical Section 16010 – General Construction Methods and General Equipment Fabrication apply to the construction and assembly of MCCs.

E. Perform any required work to correct improper installations at no additional expense to the City.

3.03 INSTALLATION

A. MCCs shall be factory inspected and witness tested by the City prior to it being shipped to the jobsite. If a MCC shows up at the jobsite and has not been previously inspected, tested and approved for shipping by the City, then the Contractor shall remove the MCC from the jobsite and return it to the factory for factory inspection and witness testing, all at the expense of the Contractor.

B. The as-built Electrical Drawings shall be placed in a water tight plastic wrap and shipped with the MCCs to the jobsite. As-Built drawings shall be updated and replaced prior to final acceptance.

C. Vertical Sections shall be mounted, leveled, and anchored to the concrete pad.

D. In general, all conduits entering or leaving a MCC shall be stubbed up into the bottom horizontal wireway directly below the vertical Section in which the conductors are to be terminated.

E. All motor starters that utilize changeable overload heater elements shall be furnished to the job site without the elements installed. After the mechanical equipment arrives, the Electrical Contractor shall check the nameplates for the full load amperage (FLA) rating and select the appropriate overload element to be installed. Electronic overloads shall be adjusted based on equipment nameplate FLA rating.

F. Field interconnect wiring to the MCCs shall be neatly grouped by compartment and bound by plastic ty-wraps. All wiring shall be supported so that circuit terminations are not stressed.

G. All lugs shall be copper sized for wires listed in the Conduit and Wire Routing Schedule.

H. Construction of MCC Sections shall be modular to allow installation of MCCs in buildings through standard access doors.

I. MCC Supplier to provide all necessary copper lugs for connection of power cables to MCC bus and breakers.

J. Bottom of MCCs shall be sealed to prevent the entry of insects and rodents.

K. Clean and touch up paint MCC surfaces prior to final punch list.

L. Clean and vacuum the interior of MCC prior to applying power and at the end of project, prior to final acceptance.

3.04 FIELD TESTS

A. Provide field testing of MCCs as specified in Section 16010.

B. All breakers shall be set to values determined by Section 16605 Electrical System Analysis. Breakers shall not be turned on until they have been set and field tested.

3.05 SPARE PARTS

A. Provide 1 cup of each color used for exterior paint finish of MCC to City for its use.

B. Spare parts shall be provided as specified in Section 16010.

3.06 WARRANTY

A. Provide warranty as specified in Electrical Section 16010 – Warranty.

END OF SECTION

SECTION 16481

VARIABLE FREQUENCY DRIVE

PART 1 - GENERAL

1.01 SCOPE OF WORK

A. The Contractor shall supply VFDs along with complete startup and testing services for the variable frequency drive (VFD) as specified herein. This document describes the function and operation of the system and particular components, but does not necessarily describe all necessary devices. All components and devices shall be furnished and installed as required to provide a complete operable and reliable system for accomplishing the functions and meeting the performance set forth hereinafter at no additional cost to the City.

B. Furnish all required labor, materials, safety equipment, transportation, test equipment, incidentals and services to provide a complete and operational system as described in these Specifications, or required for fully operating facility.

C. Work includes that specified in Division 16.

D. The VFD scope of work includes providing:

1. Providing each modular variable frequency drive as shown on Contract Elementary Drawings. Variable frequency drive shall be provided with fully speed bypass where shown on Contract Drawings. All VFDs shall be of the same manufacturer.

2. Providing active harmonic filter, cooling system, mounting hardware, associated miscellaneous devices, and field control stations.

3. Installation of the complete VFD systems with components as specified in Section 16010 - Electrical.

4. Submittal data and Drawings.

5. Startup assistance.

6. Testing.

7. Operation and maintenance manuals.

8. Warranty of all components of the VFD system.

1.02 JOB CONDITIONS

A. Rate the equipment to meet the job conditions listed in Section 16010 – Electrical.

B. All the VFDs shall be rated for continuous full load operation when powered from the normal Utility power.

1.03 SUBMITTALS AND DRAWINGS

A. Provide Submittals and Drawings as specified in Section 16010 - Electrical.

B. Include a record of each VFD parameter setup during startup and testing that is not factory default and placed a copy in each O & M manual.

1.04 OPERATION AND MAINTENANCE MANUALS

A. Provide operation and maintenance manuals as specified in Section 16010 - Electrical.

B. Include a record of each VFD parameter setup during startup and testing and place a copy of setting in each O & M manual.

PART 2 - MATERIALS

2.01 QUALITY

A. It is the intent of the Contract specifications and drawings to secure the highest quality in all materials and equipment in order to facilitate operation and maintenance of the facility. All equipment and materials shall be new and the products of reputable suppliers having adequate experience in the manufacture of these particular items. For uniformity, only one manufacturer will be accepted for each type of product.

B. All equipment shall be designed for the service intended and shall be of rugged construction, of ample strength for all stresses which may occur during fabrication, transportation, erection, and continuous or intermittent operation. All equipment shall be adequately stayed and braced and anchored and shall be installed in a neat and workmanlike manner. Appearance and safety, as well as utility, shall be given consideration in the design of details. All components and devices installed shall be standard items of industrial grade, unless otherwise noted, and shall be of sturdy and durable construction suitable for long, trouble free service. Light duty, fragile and competitive grade devices of doubtful durability shall not be used.

C. Products that are specified by manufacturer, trade name or catalog number established a standard of quality and do not prohibit the use of equal products of other manufacturers provided they are favorably reviewed by the City's Engineer prior to installation.

D. Underwriters Laboratories (UL) listing is required for all substituted equipment when such a listing is available for the first named equipment.

2.02 VARIABLE FREQUENCY DRIVE

A. General:

1. The variable frequency drive shall be ABB ACS 550, Allen-Bradley 755 series, Eaton or approved equal with remote digital controller and display unit. Each VFD shall have motor terminator unit supplied and installed near motor.

B. Load - The VFD shall be designed to continuously operate the following motor/pump load.

1. The power section shall consist of six (6) SCRs, rated for a minimum repetitive peak inverse voltage of 1400 V at 480 VAC. The power section shall be capable of the following:

2. Motor, squirrel-cage induction.

3. Pump, per Mechanical Division Specification.

4. Horsepower, size (minimum) with 1.15 service factor shown on Contract Drawings, at Full speed R.P.M. for supplied pump motor.

5. Continuous current at rated voltage, as shown on Contract single line diagrams, three phase, 60 cycle.

C. The harmonic distortion shall meet the requirements of IEEE519. Provide additional filtering equipment as required at no additional cost to City.

D. The VFD shall be able to start into a spinning motor. The VFD shall be able to determine the motor speed in any direction and resume operation without tripping. If the motor is spinning in the reverse direction, the VFDs shall start into the motor in the reverse direction, bring the motor to a controlled stop, and then accelerate the motor to the preset speed.

E. The VFD shall not be affected by or generate excessive electro-magnetic interference (EMI). The VFD shall be provided with a radio interference filter (RIF) to meet the following requirements:

1. The use of a 4 Watt hand-held VHF/UHF transceiver within three feet of the VFD with its doors closed shall not cause erratic operation, loss of configuration, or any other deviation from normal operation.

2. Provide RFI/EMI filter on line side of VFD. Filter shall attenuate conducted radio frequencies or EMI to meet FCC standards for conducted emissions.

3. The worst case conducted and radiated EMI generated by the VFD shall not be enough to prevent the use of hand held VHF-UHF transceivers within three feet of the VFD with its doors closed.

F. Digital programmer/controller –The VFD shall be provided with a door mounted alpha-numeric human interface module (HIM) digital display with keypad to view and adjust the diagnostic and status indicators. Provide manual single turn potentiometer for manual speed control.

G. Each controller shall automatically restart upon reapplication of power after a loss of line power without requiring a manual reset. Momentary or sustained power failures shall not fault trip out the controller or blow any fuses.

H. Input and Output Terminations - The VFD assembly shall have functional conduit entry provisions and termination points at terminal blocks as shown on the Contract "E"-Series and Elementary Drawings.

I. Panel Mounted Ethernet port – Provide panel mounted Ethernet port connected directly to each VFD drive Ethernet port. Ethernet port shall be UL recognized, Category 6, RJ45-Bulkhead with cast aluminum base housing, 304 stainless steel latch, and polycarbonate UV rated gasketed cover. Ethernet port shall be Grace Engineered Products or approved equal.

J. Provide Ethernet port for PLC communication.

K. Enclosure - The enclosure shall be motor control center construction as specified in Section 16480 - Motor Control Centers. All components shall be accessible from the front of the enclosure. Rear or side access shall not be required in order to remove or service any component. The enclosure shall include the following in its construction:

1. Copper lugs sized for wires listed in the Conduit & Wire Routing Schedule and provisions for connecting the motor power leads to output of the SSS shall be provided at the bottom of the enclosure.

2. The VFD shall incorporate fans for cooling. The air flow through the VFD compartment shall provide proper cooling of the operating VFD at an ambient temperature of 110° Fahrenheit. The thermostat shall be designed to regulate and monitor air temperature in the VFD enclosure. Thermostat shall have bi-metallic adjustable set point range of 30 to 140° F. Thermostat shall have a switching capacity of 10A at 120 VAC.

3. The complete VFD unit, including the enclosure assembly, shall be U.L. listed for a minimum of 65,000 RMS symmetrical ampere fault withstand capability. VFD assemblies consisting of the VFD, enclosure and all accessories that are not U.L. listed will not be approved.

4. Provide all vents and louvers with removable metal filters.

2.03 ACTIVE HARMONIC FILTER

A. General:

1. Active harmonic filter shall supply non-fundamental current demanded by the non-linear load that results in a near sinusoidal current being drawn from the supply. DC bus shall store power for power semiconductor switching. Filter shall maintain power factory between 0.95 and 0.999 lagging when operating. Active Harmonic Filter shall be Transcoil Inc. (TCI) Harmonic Guard active harmonic filter with current transformers and associated devices, Schneider Electric, Eaton or approved equal.

B. Design:

1. The active harmonic filter shall:

a. Be provided with over-current and current limiting self-protection. Operation shall continue indefinitely at manufacturer defined safe operating levels without trip off or destruction of the active harmonic filter.

b. Have inductive elements in the power circuit be coreless, in order to maintain constant inductance and avoid saturation at high current levels

c. The active harmonic filter shall feature a fully digital, broadband current regulator with progressive gains to eliminate system resonance tuning issues and simplify startup and commissioning.

d. The active harmonic filter shall feature single processor control of all power electronic devices per a single active filter to reduce fault response latency and harmonic correction loop times

2. Filter shall have built in redundancy so at least one half of the corrective current capacity is available after a normal single point fault

3. Two distinct levels of faults shall be employed:

a. Critical level faults (all other faults) stop the function of the unit and await operator action to restart. The run relay shall be disabled and the fault relay enabled. Operator shall be required to initiate a power reset (cycle power off and on) to restart the active harmonic filter.

b. Non-critical level faults (e.g. AC line power loss) will provide automatic restart and a return to normal operation upon automatic fault clearance

without operator initiation.

4. The logic of the active harmonic filter shall monitor the load current by utilizing two (2) current transformers (CTs) mounted on phases A and C in the Main Switchboard to direct the function of the power electronic converter.
5. Filter shall be rated for 480V, 3 phase, 3 wire plus ground with +/- voltage tolerance. Input circuit breaker shall be rated for 100KAIC.
6. Filter shall correct harmonic and voltage distortion to meet IEEE 519.

C. Controls:

1. Automatically start to correct harmonic currents after power-up without operator intervention.
2. Operational Modes: (selectable at Operator Interface)
3. Harmonic Correction Only
4. Power Factory Correction Only Mode
5. Combination Harmonic and power factory mode.
6. Remote Monitoring: Provide configurable relay based run/stop command inputs and manual and auto run/stop commands.
7. Provide ability to load and save operational parameters and revert to factory default settings.
8. Integral serial RS-485 field bus slave network connection for Modbus RTU.

D. Operator Interface:

1. Operator interface shall be 5.6", color with LED backlight.
2. Provide Home, Status, Fault and Setup screens (minimum).
3. Display THD, Power Factor, RMS current, RMS voltage, and fault history. Graph wave forms of both RMS current and voltage.
4. Graphically display active filter current usage (0-100% capacity). Show nominal operation and "at capacity" operation.
5. Display trends history data for four operator selectable variables.

E. Enclosure:

1. Active harmonic filter shall be installed in MCC lineup.
2. Door shall be interlocked with the circuit breaker to prevent the door from being opened when the unit is energized.
3. Enclosure shall have flush door-mounted digital Operator Interface.

PART 3 - EXECUTION

3.01 WORKMANSHIP

A. All work in this Section shall conform to the codes and standards specified in Electrical Section 16010.

B. The Supplier shall employ personnel that are skilled and experienced in the startup and testing of all elements, equipment, devices, instruments, accessories, and assemblies. All installation labor shall be performed by qualified personnel who have had VFD experience on similar projects. Provide first class workmanship for all installations.

C. Ensure that all equipment and materials fit properly in their installations.

D. Electrical Section 16010 - subsections labeled General Construction Methods and General Equipment Fabrication applies to the construction and assembly of VFDs.

E. Perform any required work to correct improper installations at no additional expense to the City.

F. All equipment installed by the Contractor shall be in accordance with the Drawings and the manufacturer's recommendations and instructions and shall operate to the Engineer's satisfaction. Follow all manufacturer's instructions for handling, receiving, installation, and pre-check requirements prior to energization. After energization, follow manufacturer's instructions for programming, set-up and calibration of equipment. The Contractor shall be responsible for, and shall correct by repair or replacement, at his own expense, equipment that, in the opinion of the Engineer has been caused by faulty mechanical or electrical assembly by the Contractor. Necessary tests to demonstrate that the electrical and mechanical operation of the equipment is satisfactory and meets the requirements of these Specifications shall be made by the Contractor at no additional cost to the City.

3.02 MAINTAINABILITY

A. The following minimum provisions shall be included for the VFD assembly maintainability:

1. All control circuit voltages (12 VDC, 24 VDC and 120 VAC) shall be physically and electrically isolated from power circuit voltages (380 to 600 VACS) to ensure safety to maintenance personnel.

2. A control compartment for all low voltage signals and circuit boards shall be provided which is physically separated from the power compartment and power wiring.

3. All printed circuit boards shall utilize quick disconnect plugs and/or pull apart terminal blocks to facilitate maintenance by providing quick change out without disconnecting terminal strip connections thereby reducing wiring errors.

4. The VFD assembly shall be modular in construction to provide for ease and speed of maintenance. The modules shall be designed to allow for their removal by one maintenance technician.

5. The VFD shall be capable of starting and operating without a motor connected in order to run tests of only the VFD assembly.

6. The supplier of the VFD shall have a factory trained service representative in domestic residence within 150 miles of the jobsite. This factory representative shall be trained in the maintenance and troubleshooting of the equipment specified herein.

7. The complete VFD assembly shall be manufactured in the U.S.A.

3.03 RELIABILITY

A. The quality assurance and testing program shall at a minimum consist of the following:

1. Component testing - All power semiconductors and integrated circuits shall be 100% tested.

2. Computerized ATE testing - Computerized automated test equipment (ATE) shall be used to evaluate the functional performance of printed circuit boards. Printed circuit boards shall receive a thermal stress test with temperatures cycled between 0° C and 65° C and receive electrical power-on and power-off cycle tests.

3. System testing - The complete VFD assembly mounted in MCC for this project shall be tested at the systems house prior to shipment. All modes of operations shall be tested with a small motor load to check functionality in compliance with the specifications.

4. Failures - The manufacturer shall repeat each entire test upon any component failure, modification, or replacement. All component failures, modifications, or replacements shall be listed on the test documentation.

5. A complete description of suppliers' quality assurance and testing program shall be included in this submittal.

3.04 FIELD ASSISTANCE

A. Field testing, checkout and start-up of the VFD equipment shall be performed under the technical direction of the VFD manufacturer's field service engineer. Submit resume for approval of field service engineer proposed to do VFD startup one (1) week prior to energizing any VFD in field. Under no circumstances are any portions of the drive system to be energized to run motor loads without authorization from the manufacturer's field service engineer.

1. The setup and programming of each VFD shall be provided by a factory-trained representative who is authorized by the VFD manufacturer to perform the startup. This setup and programming shall be done prior to and during the first application of power to the pump motor. Each VFD electronic motor overload protection shall be set to meet the NEC Code requirements.

2. Provide operating testing as specified in Section 16010 - Electrical.

B. Provide 2 hours of "VFD Setup" Training on operating and maintenance procedure.

3.05 WARRANTY

A. Provide warranty as specified in Electrical Section 16010 - subsection Warranty.

END OF SECTION

SECTION 16605

ELECTRICAL SYSTEM ANALYSIS

PART 1 - GENERAL

1.01 SUBMITTALS

A. Provide the following submittals per Section 16010 for the electrical power system from the 480V system down to and including the 240/120V distribution system:

1. Short Circuit Study.

2. Protective Device Coordination Study.

3. Arc Flash Study.

B. All Electrical Analysis Studies shall be prepared, stamped and signed by a professional Electrical Engineer registered in the State of California and in accordance with IEEE 242, IEEE 399 ANSI/IEEE C37.13 and IEEE 519.

C. Exceptions / Clarifications

1. Itemize all exceptions and clarifications to the Contract Documents in a letter (located in the front of the submittal) on company letterhead.

2. Exceptions that are noted in the study, but not listed on the Exceptions/Clarifications letter, will be considered as non-responsive and not accepted as changes to the Contract Documents.

3. All exceptions taken from the Drawings and specifications shall be documented with justifications. When noting the exception, list which Drawings or which Specification Subsection number the exception is taken.

4. Clarification requests shall list which Drawing or Specification Subsection number the clarification is required for.

D. Provide two (2) USBs at the completion of the project. One USB will contain the as-built set of studies, reports, settings, etc. The other USB will contain the original source format of input data used for the PC based computer software, including all SKM files used to create the studies. Provide all setup information used for the computer based study and report.

E. For each resubmittal, provide a copy of submittal comments and a separate letter, on Company letterhead, identifying how each submittal comment has been addressed in the resubmittal.

F. When submittals are provided in PDF format, utilize the “Bookmark” feature of the Adobe Acrobat and clearly bookmark locations in the report to identify sections in the Report’s Table of Contents. Bookmarks shall not be out of order; the English description shall match that listed in the Report’s Table of Contents.

1.02 SEQUENCING AND SCHEDULING

A. It is the responsibility of those performing the electrical system analysis to collect and field verify all data. This includes verifying existing electrical distribution and obtaining all data from the Utility Company, Generator supplier and vendors necessary for completing the requested studies. Utilize proposed load data for the Studies obtained from submittals, Utility Company, Generator manufacturers, field verifications, etc.

B. A complete Protective Device Coordination Study shall be submitted within 60 days after approval of Short Circuit Study.

C. At the completion of the project, all studies shall be resubmitted with all calculations rerun, data and graphs updated to reflect as-left conditions. Provide new Arc Flash labels to reflect as-constructed equipment and as-left circuit breaker settings.

D. When previous electrical system analysis studies are available and provided to the Contractor, it is the Contractor's responsibility to verify the accuracy of the data used and to update it to match existing conditions.

PART 2 - MATERIALS

2.01 GENERAL

A. Equipment and component titles and numbers used in the Studies shall be identical to the equipment and component titles and numbers shown on the Drawings.

B. Perform Studies using PC based computer software. State program name and version (e.g. version 2.1) in report.

C. Perform complete fault calculations for Utility and generator sources. Equipment shall not be grouped as a single large load; they shall be treated as individual loads. When generators are incorporated into the system, develop two separate networks: one with utility only (no generator attached) and one with generator only (no utility attached)

D. Complete protective device coordination study listing all device settings shall be utilized during start-up of electrical equipment.

E. Provide unique page numbers for every sheet in all Studies. Unique page numbers to be manually placed by Study Company after printout if study report doesn't assign page numbers.

F. One line diagrams

1. Shall be readable on 11" x 17" paper. One line diagram shall be redrawn in AutoCAD on multiple sheets if necessary or as requested by City.

2. Buses and branches shall have descriptive names matching one line diagram or existing system (i.e. not Bus-0084). Automatic transfer switches (ATSs) and Main Switchboards (MSBs) shall not have multiple node buses.

3. Automatic transfer switches (ATSs), Main Switchboards (MSBs), shall not have multiple node buses.

4. Primary and secondary for transformers, Variable Frequency Drives (VFDs), etc. shall be changed to node buses.

G. Multiple scenarios for the short circuit and arc flash reports shall be provided.

1. Maximum available fault current from utility transformer:

2. Maximum available fault current from Generator (when shown)

3. Do not combine networks when multiple sites are modeled.

4. All studies shall be repeated with the arc flash reduction switch enabled (where applicable).

2.02 SHORT CIRCUIT STUDY

A. Include in short circuit study the following:

1. Cable impedances based on copper conductors.
2. Bus impedances based on copper bus bars.

3. Transformer impedances based on tolerances specified in ANSI C57.12.00.

4. Source date (i.e. cable lengths, sizes, and quantity, for all runs in study, listing of bus loads, etc.).

5. Utility data:

a. Size of Utility transformer.
b. Impedance of Utility transformer.
c. Primary voltage of Utility transformer.
d. Fault information on primary side of Utility transformer:
1) Three phase bolted fault.
2) X/R ratio (positive sequence).
3) Line to ground fault.
4) X/R ratio (zero sequence).
5) Protective relays (type & settings).

6. Voltage drop and current flow at each node and load in system.

B. Calculate Short Circuit interrupting duties for an assumed three-phase bolted fault and line-to-ground fault at each of the following locations:

1. Power transformer's primary.

2. Main Switchboard.

3. All Motor Control Centers (MCCs).

4. All panelboards.

5. All 480V, 3 phase motor and equipment loads.

6. All 3 phase transformer secondaries.

7. All 240/208V equipment.

C. Verify:

1. Equipment and protective devices are applied within their ratings.

2. Adequacy of switchboard, panelboard and MCC bus bars to withstand Short Circuit stresses.

3. Adequacy of transformer windings to withstand Short Circuit stresses and over-current.

4. Cable sizes for ability to withstand normal and fault load currents.

D. Provide the following in the Short Circuit study report:

1. Calculation methods and assumptions.

2. Input data.

3. Short circuit data.

   a. Impedances.
   b. X to R ratios.
   c. Asymmetry factors.
   d. Motor contributions.
   e. Short Circuit kVA.
   f. Symmetrical and asymmetrical line-to-line and line-to-ground fault currents.
   g. Device evaluation including rating of equipment.
   h. Bus evaluation including rating of equipment.
   i. Source data, from Electric Utility Company. Include copy of correspondence with Utility Company indicating values used.
   j. Source data from Generator Supplier (where applicable). Include copy of Generator provided values used.

4. Tabulations of calculated quantities.

5. Results, conclusions, and recommendations.

   a. Spreadsheet comparing calculated fault current, equipment rating and protective device rating.

6. One line diagrams of distribution system

7. Impedance diagram showing the resistances and reactances for all cables of the distribution system.

2.03 PROTECTIVE DEVICE COORDINATION STUDY

A. Provide Protective Device Coordination drawings for each section of distribution system that includes the following:

1. Graphically diagram displaying coordination time-current curves (TCC) on conventional log-log curve sheets. Each time-current curve shall have a unique identifier label (e.g. Two TCCs shouldn't be labelled MCC-1 & pump 1). This identifier shall be used in the tabulated settings spreadsheet and on the associated one-line diagram.

2. Time-current curves shall include the following curves (minimum):

   a. Utility relays (phase & ground) and high voltage switchgear relays (phase and ground).
   b. All upstream protective devices and breakers.
   c. All mechanical overloads.
   d. All MCP breaker and associated motor or equipment load. Duplicates of the same sized protective device and motor size may be omitted (i.e., when there are 3 pumps for same application).
   e. All transformers and associated primary and secondary protection.
   f. Unique identifier for each protective device.
   g. Provide separate TCC for phase and ground curves.
   h. TCC for Ground curves shall include the transformer magnetizing inrush currents for all transformers downstream of the circuit breaker. Ground shall clear the inrush currents.

3. One-line diagram that applies to specific portion of distribution system associated with time-current curves. One-line diagram shall include the following:

   a. Location of each device.
   b. Power and voltage ratings, primary and secondary transformers amperages.
   c. All significant circuit elements such as transformers, cables, breakers, fuses, relays, etc. with their corresponding amperage ratings.
   d. Tag of each branch and node (shall be the same tags used in short circuit study).
   e. Mechanical overload and contactor.
   f. English description, equipment name, HP, and full load amp rating of motors and other 3 phase loads.
   g. Terminate device characteristic curves at a point reflecting maximum fault current to which device is exposed as calculated in short circuit study.

4. Time current curves shall be provided for all protective devices with adjustable settings.

B. Characteristics plotted on time current curves shall include:

1. Protective current relays.

2. Fuses including manufacturer's minimum melts, total clearing, tolerance, and damage bands.

3. Circuit breaker trip devices, including manufacturer's tolerance bands.

4. Transformer full-load currents at 100% and 600%.

5. Motor and equipment full load currents. Motors fed from VFDs and Soft Starters shall have their starting curves adjusted according to inrush currents on the TCC. Motors on TCC shall show the DC offset for VFD and Soft Starter fed pumps.

6. Transformer magnetizing inrush currents.

7. Transformer damage curves.

8. ANSI transformer withstand parameters.

9. Fault currents.

10. Ground fault protective device settings.

11. Other electronic protective devices.

C. Provide the following recommended settings in spreadsheet format in the Protective Device Coordination study report:

1. Relay settings including CT values.

2. Circuit Breakers adjustments:

   a. Long Delay Pickup and Time.
   b. Short Time Pickup and Time.
   c. Instantaneous Pickup and Time.
   d. Ground Pickup and Time.

3. Programmable settings for all electronic devices. Settings for non-current relay settings shall also be provided.

4. Settings shall be given both in amps and seconds as well as the corresponding physical setting (i.e. 30A and setting B on MCP) for device.

5. Identify protective device associated with each curve by manufacturer type, function and part number.

2.04 ARC FLASH HAZARD STUDY

A. General:

1. Arc flash boundary and incident energy shall be calculated, using a PC computer program, at all significant locations in the electrical network, including

switchgears, switchboards, MCCs, transformers, etc. where work could be performed on energized equipment.

2. Arc flash computation shall include both line and load side of main breaker calculations, where necessary.

3. Document specific method of NEC calculation used.

4. Do not include the motor contribution of motors fed by VFDs in the arc flash hazard study.

B. Safe working distances shall be specified for calculated fault locations based upon the calculated arc flash boundary considering an incident energy of 1.2 cal/cm2.

C. Study shall include the following:

1. All significant locations in 480 volt, 240 volt and 208 volt systems fed from transformers equal to or greater than 125 kVA.

2. Incident energy and flash protection boundary calculations in spreadsheet format in the Arc Flash Hazard study report.

3. Provide the following incident energy and flash protection boundary calculations in spreadsheet format in the Arc Flash Hazard study report (values shall be calculated for all electrical equipment in the power distribution system):

a. Arcing fault magnitude
b. Device clearing time
c. Duration of arc
d. Boundary for:
1) Arc flash protection
2) Limited shock approach
3) Restricted shock approach
e. Working distance
f. Incident energy at 18 inches (in cal/sq.-cm)
g. Recommendations for arc flash energy reduction for each location having more than 8 cal/sq.-cm. Provide preliminary cost estimate for implementing recommendations.
h. Provide separate spreadsheets for all scenarios listed in subsection 2.01.G. Do not combine the spreadsheet values nor only provide the worst case scenario. Clearly list on each spreadsheet the English description of the Scenario presented.

4. Provide recommendations for the Personal Protective Equipment (PPE) that the City should maintain on site.

5. Provide recommendations for safety label design that should be posted on electrical equipment.

2.05 STUDY REPORTS

A. Written reports submitted for approval shall contain:

1. Scope of Studies performed.

2. Explanation of bus and branch numbering system.

3. Report calculations, tabulations and spreadsheets.

4. Selected equipment deficiencies.

5. Results of all Studies.

6. Comments, recommendations or suggestions regarding:

   a. Changes and additions to equipment rating and/or characteristics.

   b. Circuit protective devices improperly rated for overload or fault conditions.

   c. Arc Flash protective equipment and safety labels.

7. Tabulation spreadsheet for all protective device settings with the following column entries (minimum):

Device Code	Description	MFR	Type	Plug Trip	Frame	KAIC	Long Time		Short Time		Inst	Ground	
							Amps	Time	Amps	Time	Amps	Amps	Time

8. Stamped, signed and dated by Electrical Engineer registered in the State of California who performed the analysis.

B. Reports are to be updated to reflect as-built conditions and placed in O&M manual per Section 16010 requirements.

PART 3 - EXECUTION

3.01 GENERAL

A. Make minor modifications to equipment settings as required to accomplish conformance with the Short Circuit and Arc Flash Studies.

B. Notify Engineer in writing of any required major equipment modifications.

3.02 FIELD TESTS

A. Provide field testing of protective equipment.

B. Adjust relay and protective device settings according to values established by Coordination Study.

3.03 ARC FLASH WARNING LABELS

A. All Arc Flash warning labels shall meet latest NEC requirements, OSHA standards and NFPA recommendations.

B. Provide and install 4 in. x 6 in. thermal transfer type labels of high adhesion polyester for each work location analyzed and as required by the NEC for flash protection on power distribution equipment.

C. Each label shall have an orange header with the wording, “WARNING, ARC FLASH HAZARD,” and shall include the following machine printed information:

1. Location Designation
2. Nominal system voltage
3. Arc Flash boundary
4. Available incident energy and working distance
5. Minimum arc rating of clothing
6. Site specific Level of PPE
7. Engineering report number, revision number and issue date.
8. Company preparing study and phone number.

D. Labels shall not be hand labeled.

E. For all areas, Contractor shall post the following:

1. Working distances
2. Shock hazard voltage
3. Shock Approach Boundaries:
   a. Limited
   b. Restricted

F. Provide Arc Flash labels for the each of the following pieces of equipment:

1. Switchboard
2. Switchgears
3. 480V and applicable 208V panelboards
4. MCCs
5. Disconnect Switches
6. Control Panels
7. All electrical equipment with an incident energy level greater than 1.2 Cal/cm2.
8. Where Switchgear, Switchboard, MCC, Panelboard, Distribution Panel, etc. feed multiple circuit breakers from the enclosure, provide separate line and load side Arc Flash Labels for the Main Circuit Breaker.
9. Provide separate labels at each circuit breaker that has arc flash reduction switches indicating the appropriate values when the switch is enabled.

G. Labels shall be submitted for approval. No labels shall be installed without prior approval by City or City representative.

3.04 ARC FLASH TRAINING:

A. The Electrical Engineer, who sealed the Electrical System Analysis shall train City personnel of the potential arc flash hazards associated with working on energized equipment (minimum of 4 hours). Maintenance procedures shall be in accordance with the requirements of NFPA 70E, Standard for Electrical Safety Requirements for Employee Workplaces and shall be provided in the equipment manuals.

END OF SECTION

(THIS PAGE LEFT BLANK INTENTIONALLY)

SECTION 16915

CONTROL STRATEGIES

PART 1 - GENERAL

1.01 CONTROL STRATEGIES - INDEX

CS #	Title
0	Comm Fail
1	Fail to Start and Starter Counter
2	Runtimes
6	Discrete Lockout
7	Analog Lockout
8	Station Alarm Light
9	Discrete Input Alarms
10	Data Transfer
50	Level
60	Pressure
70	Flow
91	Intrusion
111	Well Pump P111
411~2	Sodium Hypochlorite System
421~2	Ferric Chloride System
431~2	Ammonium Sulfite System

PART 2 - MATERIALS

2.01 CONTROL STRATEGIES – GENERAL

A. CS:#0
LOCATION: PLC-1
TITLE: Comm Fail

1. Description:

   Generate typical Comm fails based on WTP PLC Standard

2. INPUTS & OUTPUTS:

3. CONTROL:

4. TIMERS:

5. CALCULATIONS

6. ALARMS:

B. CS: #1
TITLE: Fail to Start

1. DESCRIPTION:

This strategy shall determine the typical fail to start alarms. This is a typical strategy for the following inputs:

P&ID #	Call	Input	Alarm
I02	X111	N111	UAT111
I04	*X301	*N301	UAT301

P&ID #	Station Reset	SCADA Reset
I4	R100B (via HCB100)	HCD100

* Transferred from PLC-FCP

2. INPUTS / OUTPUTS:

LOGICAL INPUTS:

N111	-	Pump P111	Run/Off
HCD100	-	SCADA	Reset/Null
R100B	-	Zone 3 Station	Reset/Null

LOGICAL OUTPUTS:

X111	-	Pump P111	Start / Stop
UAT111	-	Pump P111	Fail to Start/Norm
UAYX111	-	Pump P111	Lockout/Norm

VARIABLE INPUTS:
None

VARIABLE OUTPUTS:
None

SETPOINT REGISTERS:

TDN111	-	Report Back Alarm Delay	Seconds

TIMERS:

KN111	-	Report Back Timer	Seconds

COUNTERS/TOTALIZERS:
None

3. CONTROL:

a. None

4. TIMERS:

a. See timers KN111, in Alarms.

5. CALCULATIONS:

a. None

6. ALARMS:

a. If Pump P111 is called to start X111,
AND run N111 is not on within TDN111 (timer KN111)
then activate Pump fail to start UAT111 alarm.

b. If Pump fail to start UAT111 is active, set UAYX111 Pump Lockout.

The UAT111X shall be latched in upon being set until operator manually resets via register Station Reset R100B OR SCADA Reset HCD100.

C. CS: #2
TITLE: Runtimes and Start Counter

1. DESCRIPTION:

This strategy shall determine the typical equipment runtimes. This is a typical strategy for the following inputs:

P&ID #	Input	Runtime Non-Resettable	Runtime Resettable	Reset
I02	N111	KK111	KL111	RR111
I04	*N301	KK301	KL301	RR301

P&ID #	Input	Pump Start Non-Resettable	Pump Start Resettable	Reset
I02	N111	KN111	KP111	RS111
I04	*N301	KN301	KP301	RS301

* Transferred from PLC-FCP

2. INPUTS / OUTPUTS:

LOGICAL INPUTS:

N111	-	Pump P111	Run/Off
RR111	-	Pump P111 Total Runtime	Reset/Null
RS111	-	Pump P111 Total Start	Reset/Null

LOGICAL OUTPUTS:
None

VARIABLE INPUTS:

None

VARIABLE OUTPUTS:
None

SETPOINT REGISTERS:
None

TIMERS:

KK111	-	Pump P111 Runtime Non-Rst	Hours
KL111	-	Pump P111 Runtime Reset	Hours

COUNTERS/TOTALIZERS:

KN111	-	Pump P111 Start Non-Rst	Hours
KP111	-	Pump P111 Start Reset	Hours

3. CONTROL:

   a. None

4. TIMERS:

   a. See timers KK111, KL111, , in Calculations.

5. CALCULATIONS:

   a. KK111 - Pump P111 Total Run Time is the total accumulated time the Pump has run – non – resettable (elapsed time N111 was active).

   b. KL111 - Pump P111 Total Run Time Reset is the total accumulated time the Pump has run since the value was manually reset by the operator RR111 (elapsed time N111 was active since last reset).

   c. KN111 - Pump P111 Total Start is the total accumulated time the Pump has been called to start – non – resettable (number of times N111 went active).

   d. KP111 - Pump P111 Total Start Reset is the total accumulated time the Pump has been called to start since the value was manually reset by the operator RS111 (number of times N111 went active since last reset).

6. ALARMS:

   a. None

E. CS: #6
TITLE: Discrete Lockout

1. DESCRIPTION:

This strategy shall determine the typical discrete lockouts. This is a typical strategy for the following inputs:

P&ID#	Input	Alarm	Reset
I02	PSH161	PAHHX161	<manual at FCP>
I05	PSH411~2	PAHX411~2	R100B
I06	PSH421~2	PAHX421~2	R100B
I07	PSH431~2	PAHX431~2	R100B

2. INPUTS / OUTPUTS:

LOGICAL INPUTS:

HCD100	-	SCADA – PLC-1	Reset / Null
R100B	-	Station	Reset/Null
PSH411	-	Pump P411 Hi Pressure	Alarm/Normal

LOGICAL OUTPUTS:

PAHX411	-	Pump P411 Hi Pressure	Lockout/Ok

VARIABLE INPUTS:
None

VARIABLE OUTPUTS:
None

SETPOINT REGISTERS:

TDHX4411	-	Pump P411 Hi Pressure Dly	Seconds

TIMERS:

KHX411	-	Pump P411 Hi Pressure Timer	Seconds

COUNTERS/TOTALIZERS:
None

3. CONTROL:

a. See CS#8 for acknowledge routine.

4. TIMERS:

a. See timers KHX411, in Alarms.

5. CALCULATIONS:

a. None.

6. ALARMS:

a. If PSH411 indicates Pump P411 Hi Pressure
for the duration of alarm delay TDHX4411 (timer KHX411),
then post PAHX411 Pump P411 Hi Pressure alarm.

The PAHX411 shall be latched in upon being set until operator manually resets via register Station Reset R100B OR SCADA Reset HCD100.

F. CS: #7
TITLE: Analog Lockout

1. DESCRIPTION:

This strategy shall determine the typical analog lockouts. This is a typical strategy for the following instruments:

P&ID #	Input	Alarm	Reset
I02	L151	LALX151	SPHR151
I03	*DP262	DAHX262	<BW Completion>
I03	*A282A	AAHX282A	<Local OI Reset>
I03	*A282A	AALX282A	<Local OI Reset>
I03	*A282B	AAHX282B	<Local OI Reset>
I03	*A282B	AALX282B	<Local OI Reset>
I03	*A283C	AAHX283C	<Local OI Reset>
I04	L351	LAHXA351	SPHRA351
I04	L351	LAHXB351	SPHRA351

* Transferred from PLC-FCP

Level Flush lockout alarm (LAHXA351) is to prevent initial pump starting if there is not enough capacity in the Backwash tank to hold the pump flush water.

Level Backwash lockout alarm (LAHXB351) is to prevent a backwash if there is not enough capacity in the Backwash tank to hold the filter backwash water.

2. INPUTS / OUTPUTS:

LOGICAL INPUTS:
None

LOGICAL OUTPUTS:
LAHXA351 - Backwash Tank Hi Level Flush Lockout/Ok

VARIABLE INPUTS:

L351	-	Backwash Tank Level	FT

VARIABLE OUTPUTS:
None

SETPOINT REGISTERS:

SPHRA351	-	BW Tank Hi Flush Reset	FT
SPHXA351	-	BW Tank Hi Flush Lockout	FT
TDHRA351	-	BW Tank Hi Flush Reset Dly	Seconds
TDHXA351	-	BW Tank Hi Flush Lockout Dly	Seconds

TIMERS:

KHRA351	-	BW Tank Hi Flush Reset Timer	Seconds
KHXA351	-	BW Tank Hi Flush Lockout Tmr	Seconds

COUNTERS/TOTALIZERS:
None

3. CONTROL:

   a. See CS#8 for acknowledge routine.

4. TIMERS:

   a. See timers KHRA351, KHXA351 in Alarms.

5. CALCULATIONS:

   a. None.

6. ALARMS:

   a. If Backwash Tank Level L351 is greater than High Flush Lockout setpoint SPHXA351
   for the duration of lockout delay TDHXA351 (timer KHXA351);
   then post LAHXA351 Backwash Tank High Flush Lockout.

   b. If Backwash Tank Level L351 is less than High Reset setpoint SPHRA351
   for the duration of reset delay TDHRA351 (timer KHRA351);
   then reset LAHXA351 Backwash Tank High Flush Lockout.

G. CS: #8
TITLE: Station Alarm Light

1. DESCRIPTION:

This strategy shall determine the typical station alarm light. This is a typical strategy for the following:

P&ID #	Alarm Input	Station Light	Station Alarm
I02	All Alarms and Lockouts *	USY100	UAY100

P&ID #	Station Ack	SCADA Ack
I02	R100A (via HCA100)	HCC100

* Including Alarms transferred from PLC-FCP

2. INPUTS / OUTPUTS:

LOGICAL INPUTS:

HCC100	-	SCADA	Acknowledge/Null
R100A	-	Station	Acknowledge/Null

LOGICAL OUTPUTS:

USY100	-	Alarm Light	On/Off
UAY100	-	General Station Alarm	Active/Null
UAF100	-	PLC Fault/Fail to Ack	Active/Null
USF100	-	PLC Flt / Fail to Ack Lt	Active/Null

VARIABLE INPUTS:
None

VARIABLE OUTPUTS:
None

SETPOINT REGISTERS:

TDF100	-	Fail to Ackn Alarm Delay	Seconds

TIMERS:

KF100	-	Fail to Ackn Alarm Timer	Seconds

COUNTERS/TOTALIZERS:
None

3. CONTROL:

a. See Alarms for acknowledge routine.

4. TIMERS:

a. See Alarms for KF100.

5. CALCULATIONS:

a. None

6. ALARMS:

a. If there is a new Alarm
then set USY100 Station Alarm Light to flashing
AND set UAY100 General Station Alarm

b. The USY100 shall remain flashing until operator manually acknowledges Alarm via register Acknowledge R100A **OR** SCADA Acknowledge HCC100.

c. Alarm Light USY100 shall be latched in solid and UAY100 shall be latched in until all alarm inputs have cleared.

d. If a new alarm is unacknowledged for the duration of lockout delay TDF100 (timer KF100);
then post USF100 PLC Fault/ Fail to Ack Output Closed,
AND set UAF100 PLC Fault/ Fail to Ack Alarm.

e. UAF100 shall reset after all PLC alarms are acknowledged

H. CS: #9
TITLE: Discrete Input Alarms

1. DESCRIPTION:

This strategy shall determine the typical discrete input alarms. This is a typical strategy for the following inputs:

P&ID#	Input	Enable/disable	Alarm
I02	UST111	UT111	UAT111
I02	FSH172	UH172	FAH172
I02	PSHH161	UHH161	PAHH161
I02	TSH192	UH192	TAH192
I02	UST198	UT198	UAT198
I02	ESL199	UL199	EAL199
I04	FSH372	UH372	FAH372
I04	*LSHH351	UHH351	LAHH351
I04	*PSL361	UL361	PAL361
I04	*UA301	UY301	UAY301
I05	LSH452	UH452	LAH452
I05	PSH411~2	UH411~2	PAH411~2
I06	LSH454	UH454	LAH454
I06	PSH421~2	UH421~2	PAH421~2
I07	LSH456	UH456	LAH456

I07	PSH431~2	UH431~2	PAH431~2

* Transferred from PLC-FCP

2. INPUTS / OUTPUTS:

LOGICAL INPUTS:

UST111	-	Pump P111 Fail	Alarm/Normal
UT111	-	Pump P111 Fail	Enable/Disable

LOGICAL OUTPUTS:

UAT111	-	Pump P111 Fail	Alarm/Ok

VARIABLE INPUTS:
None

VARIABLE OUTPUTS:
None

SETPOINT REGISTERS:

TDT111	-	Pump P111 Fail Dly	Seconds

TIMERS:

KT111	-	Pump P111 Fail Timer	Seconds

COUNTERS/TOTALIZERS:
None

3. CONTROL:

a. See CS#8 for acknowledge routine.

4. TIMERS:

a. See timers KT111, in Alarms.

5. CALCULATIONS:

a. None.

6. ALARMS:

a. If UST111 indicates Pump P111 Fail
for the duration of alarm delay TDT111 (timer KT111),
AND switch UT111 is enabled;
then post UAT111 Pump P111 Fail alarm.

I. CS: #10
TITLE: Data Transfer

1. DESCRIPTION:

Transfer data between the PLCs (including vendor provided PLCs) and PLCs as required for a complete and operating system.

PLCs to access data as a peer to peer with the PLCs to obtain all setpoints, scaled analogs and alarms to be displayed in the SCADA and used in the control strategies herein. All alarms from processors provided by others, whether shown on the P&IDs or not shall be displayed on SCADA. The list shall be updated during startup to include all analogs and alarms. Final display of alarms to be confirmed during SCADA meetings with City.

Provide access to allow City to adjust the setpoints of the FCP skid via SCADA.

Provide watchdog timers between City PLC and all vendor control panels to generate communication alarms.

B. CS: #50
TITLE: Level

1. DESCRIPTION:

This strategy shall determine the typical Level readout and alarms. This is a typical strategy for the following instruments:

P&ID #	Input	Alarm
I02	L151	LAH151, LAHL151, LAL151
I04	*L351	LAH351, LAHL351, LAL351
I05	L451	LAH451, LAHL451, LAL451
I06	L453	LAH453, LAHL453, LAL453
I07	L455	LAH455, LAHL455, LAL455

* Transferred from PLC-FCP

2. INPUTS / OUTPUTS:

LOGICAL INPUTS:
None

LOGICAL OUTPUTS:

LAH151	-	Well High Level	Alarm/Ok
LAHL151	-	Well Level XDCR	Fail/Ok
LAL151	-	Well Low Level	Alarm/Ok
U151H	-	Well High Alarm	Enable/Disable
U151HL	-	Well Xdcr Alarm	Enable/Disable
U151L	-	Well Low Alarm	Enable/Disable

VARIABLE INPUTS:

L151	-	Well Level	FT

VARIABLE OUTPUTS:
None

SETPOINT REGISTERS:

SPH151	-	Well High Level Alm	FT
SPHH151	-	Well High XDCR Level	FT
SPL151	-	Well Low Level Alm	FT
SPLL151	-	Well Low XDCR Level	FT
TDH151	-	Well Hi Level Alm Dly	Seconds
TDHL151	-	Well Xdcr Fail Alm Dly	Seconds
TDL151	-	Well Lo Level Alm Dly	Seconds

TIMERS:

KH151	-	Well High Level Alarm Timer	Seconds
KHL151	-	Well Xdcr Fail Alarm Timer	Seconds
KL151	-	Well Low Level Alarm Timer	Seconds

COUNTERS/TOTALIZERS:
None

3. CONTROL:

   a. See CS#8 for acknowledge routine.

4. TIMERS:

   a. See timers KL151, KH151, KHL151 in Alarms.

5. CALCULATIONS:

   a. None.

6. ALARMS:

   a. If Well Level L151 is greater than High setpoint SPH151
   for the duration of alarm delay TDH151 (timer KH151),
   AND switch U151H is enabled;
   then post LAH151 Well High Level alarm.

   b. If Well Level L151 is less than Low setpoint SPL151
   for the duration of alarm delay TDL151 (timer KL151),
   AND switch U151L is enabled;
   then post LAL151 Well Low Level alarm.

   c. If Well Level L151 is greater than High Transducer setpoint SPHH151
   OR Well Level L151 is less than Low Transducer setpoint SPLL151
   for the duration of alarm delay TDHL151 (timer KHL151),
   AND switch U151HL is enabled;

then post LAHL151 Well Transducer Fail alarm.

C. CS: #60
TITLE: Pressure

1. DESCRIPTION:

This strategy shall determine the typical Pressure readout and alarms. This is a typical strategy for the following instruments:

P&ID #	Input	Alarm
I02	P161	PAH161, PAHL161, PAL161
I03	*P263	PAH263, PAHL263, PAL263
I03	*DP262	DAH262, DAHL262

* Transferred from PLC-FCP

2. INPUTS / OUTPUTS:

LOGICAL INPUTS:
None

LOGICAL OUTPUTS:

PAH161	-	Well Disch High Pressure	Alarm/Ok
PAHL161	-	Well Disch Pressure XDCR	Fail/Ok
PAL161	-	Well Disch Low Pressure	Alarm/Ok
UH161	-	Well Disch High Alarm	Enable/Disable
UHL161	-	Well Disch Xdcr Alarm	Enable/Disable
UL161	-	Well Disch Low Alarm	Enable/Disable

VARIABLE INPUTS:

P161	-	Well Discharge Pressure	PSI

VARIABLE OUTPUTS:
None

SETPOINT REGISTERS:

SPH161	-	Well Disch High Press Alm	PSI
SPHH161	-	Well Disch High XDCR Press	PSI
SPL161	-	Well Disch Low Press Alm	PSI
SPLL161	-	Well Disch Low XDCR Press	PSI
TDH161	-	Well Disch Hi Press Alm Dly	Seconds
TDHL161	-	Well Disch Xdcr Fail Alm Dly	Seconds
TDL161	-	Well Disch Lo Press Alm Dly	Seconds

TIMERS:

KH161	-	Well Disch High Press Alm Tmr	Seconds
KHL161	-	Well Disch Xdcr Fail Alm Tmr	Seconds
KL161	-	Well Disch Low Press Alm Tmr	Seconds

COUNTERS/TOTALIZERS:
None

3. CONTROL:

a. See CS#8 for acknowledge routine.

4. TIMERS:

a. See timers KL161, KH161, KHL161 in Alarms.

5. CALCULATIONS:

a. None.

6. ALARMS:

a. If Well Discharge Pressure P161 is greater than High setpoint SPH161
for the duration of alarm delay TDH161 (timer KH161),
AND switch UH161 is enabled;
then post PAH161 Well Discharge High Pressure alarm.

b. If Well Discharge Pressure P161 is less than Low setpoint SPL161
for the duration of alarm delay TDL161 (timer KL161),
AND switch UL161 is enabled;
then post PAL161 Well Discharge Low Pressure alarm.

c. If Well Discharge Pressure P161 is greater than High Transducer setpoint SPHH161
OR Well Discharge Pressure P161 is less than Low Transducer setpoint SPLL161
for the duration of alarm delay TDHL161 (timer KHL161),
AND switch UHL161 is enabled;
then post PAHL161 Well Discharge Transducer Fail alarm.

D. CS: #70
TITLE: Flow

1. DESCRIPTION:

This strategy shall determine the typical flow readout and calculations. This is a typical strategy for the following instruments:

P&ID #	Input	Rate Units	Pump On	Total Non-Resettable	Total Resettable	Totalize Units
I02	F171 (F)	GPM	P111	FIQ171A	FIQ171B	MG
I02	*F271	GPM	-	FIQ271A	FIQ271B	MG
I04	*F371	GPM	P301	FIQ371A	FIQ371B	MG

* Transferred from PLC-FCP

2. INPUTS / OUTPUTS:

LOGICAL INPUTS:

HCD100	-	SCADA – PLC-1	Reset / Null
R100B	-	Station	Reset/Null
N111	-	Pump P111	Run/Off
RR171	-	Total Flow Totalization	Reset/Null
UHL171	-	Well to Fltr Flow XDCR Alarm	Enable/Disable

LOGICAL OUTPUTS:

FAHL171	-	Well to Filter Flow XDCR	Fail/Ok

VARIABLE INPUTS:

F171	-	Well to Filter Flow	GPM

VARIABLE OUTPUTS:
None

SETPOINT REGISTERS:

SPHH171	-	Well to Fltr Hi XDCR Alm Flow	GPM
SPLL171	-	Well to Fltr Lo XDCR Alm Flow	GPM
TDHL171	-	Well to Fltr XDCR Fail Alm Dly	Seconds

TIMERS:

KHL171	-	Well to Fltr XDCR Fail Alm Tmr	Seconds

COUNTERS/TOTALIZERS:

FIQA171	-	Flow Non-Reset	Total Gallons
FIQB171	-	Flow Resettable	Total Gallons

3. CONTROL:

a. None

4. TIMERS:

a. See timer KHL171 in Alarms.

5. CALCULATIONS:

a. FIQA171 - Total Flow totalization is the flow (non-resettable).

b. FIQB171 - Total Flow totalization Reset is the flow since the value was manually reset by the operator RR171.

6. ALARMS:

a. If F171 is greater than High Transducer setpoint SPHH171
OR F171 is less than Low Transducer setpoint SPLL171
for the duration of alarm delay TDHL171 (timer KHL171),
AND switch UHL171 is enabled,
AND any pump is running N111;
then post FAHL171 Well to Filter Flow Transducer Fail alarm.

b. The FAHL171 shall be latched in upon being set until operator manually resets via register Station Reset R100B OR SCADA Reset HCD100.

E. CS: #71
TITLE: Total Filter Flow Treated

1. DESCRIPTION:

This strategy shall determine the Total Filter Flow Treated calculations. This is used if Filters are to be backwashed based on total amount of water filtered.

Display flow total value provided via Modbus.

2. INPUTS / OUTPUTS:

LOGICAL INPUTS:
None

LOGICAL OUTPUTS:

XU271	-	Well to Filter Total Flow	Exceed/Null

VARIABLE INPUTS:

F271	-	Filter Effluent Flow	GPM

VARIABLE OUTPUTS:
None

SETPOINT REGISTERS:

SPF271	-	BW Total Flow Start	Total Gallons
TDF271	-	BW Total Flow Dly	Seconds

TIMERS:

KF271	-	BW Total Flow Tmr	Seconds

COUNTERS/TOTALIZERS:

FIQF271	-	Filter Eff Flow Filtering	Total Gallons

3. CONTROL:

a. None

4. TIMERS:

a. See timer KF171 in Alarms.

5. CALCULATIONS:

a. FIQF271 - Total Flow totalization is the flow through the Filter Effluent Flowmeter since the value has been reset.

b. If FIQF271 is greater than BW Total Flow Start setpoint SPF271 for the duration of alarm delay TDF271 (timer KF271), then post XU271 Well to Filter Total Flow Exceeded to indicate that filter is due for filtering.

Reset FIQF271 if PLC-FCP indicates that filter has just been backwashed.

6. ALARMS:

a. None

F. CS: #80
TITLE: Analytical

1. DESCRIPTION:

This strategy shall determine the typical Analytical readout and alarms. This is a typical strategy for the following instruments:

P&ID #	Input	Type	Alarm
I03	*A181	Free CL2	AAH181, AAHL181, AAL181
I03	*A282A	Total CL2	AAH282A, AAHL282A, AAL282A
I03	*A282B	Turbidity	AAH282B, AAHL282B
I03	*A282C	pH	AAH282C, AAHL282C, AAL282C
I03	*A282D	Conductivity	AAH282D, AAHL282D, AAL282D
I03	*A282E	Temp	TAH282E, TAHL282E, TAL282E
I03	*A283A	Tot Ammonia	AAH283A, AAHL283A, AAL283A
I03	*A283B	Monochlorm	AAH283B, AAHL283B, AAL283B
I03	*A283C	Free Ammonia	AAH283C, AAHL283C, AAL283C

* Transferred from PLC-FCP

2. INPUTS / OUTPUTS:

LOGICAL INPUTS:
None

LOGICAL OUTPUTS:

AAH281	-	Filter Wtr High Free CL2 Res	Alarm/Ok
AAHL281	-	Filter Wtr Free CL2 Res XDCR	Fail/Ok
AAL281	-	Filter Wtr Low Free CL2 Res	Alarm/Ok
UH281	-	Filter Wtr High Alarm	Enable/Disable

UHL281	-	Filter Wtr Xdcr Alarm	Enable/Disable
UL281	-	Filter Wtr Low Alarm	Enable/Disable

VARIABLE INPUTS:

A281	-	Filter Wtr Free CL2 Res	PPM

VARIABLE OUTPUTS:

None

SETPOINT REGISTERS:

SPH281	-	Filter Wtr High Free CL2 Alm	PPM
SPHH281	-	Filter Wtr High XDCR Free CL2	PPM
SPL281	-	Filter Wtr Low Free CL2 Alm	PPM
SPLL281	-	Filter Wtr Low XDCR Free CL2	PPM
TDH281	-	Filter Wtr Hi Free CL2 Alm Dly	Seconds
TDHL281	-	Filter Wtr Xdcr Fail Alm Dly	Seconds
TDL281	-	Filter Wtr Lo Free CL2 Alm Dly	Seconds

TIMERS:

KH281	-	Filter Wtr High Free CL2 Alarm Timer	Seconds
KHL281	-	Filter Wtr Xdcr Fail Alarm Timer	Seconds
KL281	-	Filter Wtr Low Free CL2 Alarm Timer	Seconds

COUNTERS/TOTALIZERS:
None

3. CONTROL:

   a. See CS#8 for acknowledge routine.

4. TIMERS:

   a. See timers KL281, KH281, KHL281 in Alarms.

5. CALCULATIONS:

   a. None.

6. ALARMS:

   a. If Filtered Water Free CL2 Residual A281 is greater than High setpoint SPH281
   for the duration of alarm delay TDH281 (timer KH281),
   AND switch UH281 is enabled;
   then post AAH281 Filtered Water Low Free CL2 Residual alarm.

   b. If Filtered Water Free CL2 Residual A281 is less than Low setpoint SPL281
   for the duration of alarm delay TDL281 (timer KL281),
   AND switch UL281 is enabled;
   then post AAL281 Filtered Water Low Free CL2 Residual alarm.

   c. If Filtered Water Free CL2 Residual A281 is greater than High Transducer setpoint SPHH281
   OR Filtered Water Free CL2 Residual A281 is less than Low Transducer setpoint SPLL281
   for the duration of alarm delay TDHL281 (timer KHL281),
   AND switch UHL281 is enabled;
   then post AAHL281 Filtered Water Free CL2 Residual Transducer Fail alarm.

G. CS: #91
TITLE: Intrusion

1. DESCRIPTION:

   This strategy shall determine the intrusion alarms. (Similar to standard home alarm systems) This is a typical strategy for the following instruments:

P&ID	INPUT	BYPASS	ALARM
I4	ZA191	ZS191	ZAT191

2. INPUTS & OUTPUTS:

LOGICAL INPUTS:

HCD100	-	SCADA – PLC-1	Reset / Null
R100B	-	PLC-1	Reset / Null
UA191	-	Intrusion Alarm	Enable / Disable
ZA191	-	Intrusion Alarm	Alarm / Normal
ZS191	-	Intrusion Bypass	Bypass / Normal

LOGICAL OUTPUTS:

ZAT191	-	Intrusion Alarm	Alarm/Null

VARIABLE INPUTS:
None

VARIABLE OUTPUTS:
None

SETPOINT REGISTERS:

TD191	-	Intrusion Alarm Delay	Seconds

TIMERS:

KT191	-	Intrusion Timer	Seconds

COUNTERS/TOTALIZERS:
None

3. CONTROL:

a. None

4. TIMERS:

a. See timer KT191, in part 6 Alarms.

5. CALCULATIONS:

a. None

6. ALARMS:

a. If Intrusion has been activated as indicated by ZA191,
AND Intrusion Bypass ZS191 is NOT Bypass within alarm delay TD191 (timer KT191),
AND switch UA191 is enabled;
then activate Panel Intrusion ZAT191 alarm.

b. The ZAT191 shall be latched in upon being set until operator manually reset via register Alarm Reset R100B or via register HCD100.

2.02 CONTROL STRATEGIES – SPECIFIC

A. CS: #111
TITLE: Well Pump P111

1. DESCRIPTION:

The well pump station consists of a variable frequency drive well pump pumping into a pressure filter. Chemical will be added before the filter for iron, manganese, and arsenic removal. Additional chemicals are added to combine with free chlorine to form chloramines.

The Filter PLC (PLC-FCP) controls and monitors the filter valves, surface wash pump, and air compressor system. All filter controls (manual start/stop, filter mode selection, etc.) reside in the Filter-PLC. Filter PLC-will transfer flowrates to PLC-1 to control Well Pump speed depending on Filter Mode.

The well pump will be started manually (HCA110) at the Filter Operator Interface. Well pump typically operates continuously for a season until it stops manually, on alarm or for backwashes. The Station has three modes (SPA100) selected from the Filter-PLC:

Flush: Well Pump is on and flushing well water to backwash tank; Filter is offline. Well Flush Valve (V112) is open. Well Pump operates at a fixed flush rate. Well Pump will continue to flush until Well Station turned Off or Station is placed into Auto

Off: Well Pump is off and filter is offline.

Auto Well Pump will operate on to meet a desired flow rate depending on Filter Status. Starting Well pump in AUTO requires a manual operations at the Filter OI.

- Manual start of Flush Mode
- Manual start of Production Mode (stops Flush Mode)
- Operator can manually initiate a Rise Operation
- Backwash: Backwash can be initiated manually or automatically (Total volume filtered, high differential pressure across filter cell (DP262) or both). Distribution system will supply water during the backwash while filter is going through its backwash sequence.

2. INPUTS/OUTPUTS:

LOGICAL INPUTS:

AAHX282A -	Filter Wtr High Total CL2 Res	Lockout/OAk
AALX282A -	Filter Wtr Low Total CL2 Res	Lockout/Ok
AAHX282B -	Filter Wtr High Turb	Lockout/Ok
AAHX283C -	Filter Wtr High Free Ammonia	Lockout/Ok

FAHL271	-	Filter Effluent Flow XDCR	Fail/Ok
LAHXA351	-	BW Tank High Level-Flush	Lockout/Ok
LAHXB351	-	BW Tank High Level-BW	Lockout/Ok
LALX151	-	Drawdown Low Level	Lockout/Ok
PAHHX161	-	Pump P111 Hi Hi Pressure	Lockout/Ok
XP111	-	P111 Operation	En/Dis
N111	-	P111 Operation	Run/Off
XU111	-	P111 Call	En/Dis
UATX111	-	P111 Fail	Lockout/Ok
Y111	-	P111 Status	Auto /Not Auto
YM110	-	PID Process Ctrl Variable	Auto/Manual

LOGICAL OUTPUTS:

X111	-	P111 Call	Start/Stop
X112	-	P111 Flush Valve Call	Open/Close
XP111	-	P111 Operation	Enabled/ Disabled

VARIABLE INPUTS:

F171	-	Well to Filter Flow	GPM
L351	-	Backwash Tank Level	FT
*SPY200	-	Filter Status	Off / Production / BW / Rinse
*SPA100	-	Station Operation	Flush / Off / Auto

* Transferred from PLC-FCP

VARIABLE OUTPUTS:

SPID110	-	Calculated PID Output	%
SC110	-	P111 Pacing Signal Out	%
SC111	-	P111 Pacing Signal Out	%

SETPOINT REGISTERS:

SP110	-	Pump Mode	Code #
P110	-	PID Proportional	Constant
I110	-	PID Integral	Constant
D110	-	PID Derivative	Constant
MX110	-	PID Max Pacing Output	Constant
MN110	-	PID Min Pacing Output	Constant
SP110	-	SHC Feed Pump Mode	#
SPJ110	-	XDCR Fail Pacing	%
SPK110	-	PID Manual Output Speed	%
SPL110	-	Manual Out Speed Signal	%
SPM110	-	PID Control Variable	GPM
SPQ110	-	Desired Flow Setpoint	GPM

TIMERS:
None

COUNTERS/TOTALIZERS:
None

3. CONTROL:

a. Pump OP Level XP111:

1) If the switch (HS111) status Y111 is in AUTO position
AND Well Pump Discharge Pressure PAHHX161 is normal,
AND Well Drawdown Level LALX151 is normal,
AND Filter Wtr High Total CL2 Res AAHX282A is normal,
AND Filter Wtr Low Total CL2 Res AALX282A is normal,
AND Filter Wtr High Turbidity AAHX282B is normal,
AND Filter Wtr High Free Ammonia AAHX283C is normal,
then set Pump P111 Op XP111 to enable pump operations.

2) If the switch (HS111) status Y111 is not in AUTO position
OR Pump Discharge Pressure PAHHX161 is Alarm,
OR Well Drawdown Level LALX151 is Alarm,
OR Filter Wtr High Total CL2 Res AAHX282A is Alarm,
OR Filter Wtr Low Total CL2 Res AALX282A is Alarm,
OR Filter Wtr High Turbidity AAHX282B is Alarm,
OR Filter Wtr High Free Ammonia AAHX283C is Alarm,
then reset Pump P111 OP XP111 to disable pump operations.

b. HS111 - HAND Position
Hand control operates the equipment independent of the PLC. HS111 Does not control the Flush valve.

c. HS111 - OFF Position
Stops the well pump independent of the PLC

d. HS111 - AUTO Position

1) FLUSH Mode - OI SPA100 = 1

a) If Filter OI Control (SPA110) has been placed in Flush Mode,
AND Pump P111 OP XP111 switch is Enabled,
AND LAHXA351 BW Tank High Level-Flush is normal
AND Pump Fail UATX111 is normal,
then set X111 to Start Pump,
AND set X112 to open Well Flush Valve.

b) If Filter OI Control (SPA110) is in Flush Mode,
AND Pump P111 OP XP111 switch is Disabled
OR LAHXA351 BW Tank High Level-Flush is Lockout
OR Pump Fail UATX111 is Lockout,
then reset X111 to Stop Pump,
AND reset X112 to close Well Flush Valve.

2) OFF Mode - OI SPA100 = 0

a) If Filter OI Control (SPA110) has been placed in Off Mode,
then reset X111 to Stop Pump,
AND reset X112 to close Well Flush Valve.

3) AUTO Mode - OI SPA100 = 2

FLUSH

a) If Filter OI Control (SPA110) is in Auto Mode,
AND Pump P111 OP XP111 switch is Enabled,
AND LAHXA351 BW Tank High Level-Flush is normal,
AND Pump Fail UATX111 is normal,
AND Filter is in Flush Well Mode (SPY200),
then set X111 to Start Pump with VFD Auto Speed Control by SC111,
AND set X112 to open Well Flush Valve.

b) If Filter OI Control (SPA110) is in Auto Mode,
AND Filter is in Flush Well Mode (SPY200),
AND Pump P111 OP XP111 switch is Disabled,
OR LAHXA351 BW Tank High Level-Flush is Lockout,
OR Pump Fail UATX111 is Lockout,
then reset X111 to stop Well Pump.
AND transfer 0 to SPQ110.
AND reset X112 to close Well Flush Valve.

RINSE

c) If Filter OI Control (SPA110) is in Auto Mode,
AND Pump P111 OP XP111 switch is Enabled,
AND LAHXA351 BW Tank High Level-Flush is normal,
AND Pump Fail UATX111 is normal,
AND Filter is in Rinse Mode (SPY200),
then set X111 to Start Pump with VFD Auto Speed Control by SC111,
AND set X112 to close Well Flush Valve.

d) If Filter OI Control (SPA110) is in Auto Mode,
AND Filter is in Rinse Mode (SPY200),
AND Pump P111 OP XP111 switch is Disabled,
OR LAHXA351 BW Tank High Level-Flush is Lockout,
OR Pump Fail UATX111 is Lockout,
then set X111 to Start Pump with VFD Auto Speed Control by SC111,
AND set X112 to close Well Flush Valve.

PRODUCTION

e) If Filter OI Control (SPA110) is in Auto Mode,
AND Pump P111 OP XP111 switch is Enabled,
AND Pump Fail UATX111 is normal,
AND Well Pump N111 is running,
AND Filter is in Production Mode (SPY200),
then reset X112 to close Well Flush Valve,

f) If Filter OI Control (SPA110) is in Auto Mode,
AND Filter is in Production Mode (SPY200),
AND Pump P111 OP XP111 switch is Disabled,
OR Pump Fail UATX111 is Lockout,
then reset X111 to stop Well Pump,
AND transfer 0 to SPQ110.

BACKWASH

g) Filter Control Panel shall control the backwash of the Filter. Well pump does not operate during backwash.

e. VFD Speed Control

1) SC110 Assignment

PID110 Controller Assignment:

Process Variable	F171
Setpoint	SPQ110
Control Variable	Manual-Auto control selector switch (YM110) selects the value for control variable SC110 between SPID110 (calculated PID output) and SPK110 (manual operator entered output)
P - Proportional	P110
I integral	I110
D Derivative	D110
Max PID Output Limit	MX110
Min PID Output Limit	MN110

2) If FAHL171 indicates flow transducer fail, then set SC111 to XDCR Fail speed SPJ110.

3) If X111 is set to Start Well Pump, then Well Pump to operate with VFD Auto Speed Control by SC111 based on SC110.

4. TIMERS:

a. None.

5. CALCULATIONS:

a. None.

6. ALARMS:

a. None.

B. P&ID: I05
CS: #411 (& 412)
LOCATION: McCandless Well Facility
TITLE: Sodium Hypochlorite System

1. DESCRIPTION:

This strategy controls the automatic physical starting and stopping of the Sodium Hypochlorite pumps. When in automatic mode, the chemical system is paced on Filter Effluent flow (F271) or free chlorine residual (A281). Pumps will alternate on run time.

CS #	Pump #	Chem	PSH	Tag #
411	P411	SHC	PAHX411	411
412	P412	SHC	PAHX412	412

Sodium Hypochlorite transfer pump is operated locally with a spring loaded Hand-Off switch. Transfer pump moves the chemical from the tote to the day tank.

2. INPUTS / OUTPUTS:

LOGICAL INPUTS:

PAHX411	-	Pump P411 Hi Pressure	Lockout/Ok
AAHL281	-	Filtered Wtr Free CL2 XDCR	Fail/Ok
FAHL271	-	Filter Effluent Flow XDCR	Fail/Ok
YM410	-	PID Process Ctrl Variable	Auto/Manual
Z203A	-	V203 Effluent Valve	Open/Null

LOGICAL OUTPUTS:

SA410	-	SHC Call Sequence	Enabled/Disabled

XU411	-	P411 Call	Enabled/ Disabled
XU412	-	P412 Call	Enabled/ Disabled
X411	-	P411 Call	Start/Stop

VARIABLE INPUTS:

A281	-	Filtered Water Free CL2	PPM
F271	-	Filter Effluent Flow	GPM

VARIABLE OUTPUTS:

SPID410	-	Calculated PID Output	%
SC410	-	Pacing Signal Out	%
SC411	-	P411 Pacing Signal Out	%

SETPOINT REGISTERS:

P410	-	PID Proportional	Constant
I410	-	PID Integral	Constant
D410	-	PID Derivative	Constant
MX410	-	PID Max Pacing Output	Constant
MN410	-	PID Min Pacing Output	Constant

SP410	-	SHC Feed Pump Mode	#
SPA410	-	Control Mode	Code #
SPB410	-	Proportional Pacing Signal Out	#
SPC410	-	Flow Pacing Ratio	Constant
SPD410	-	Flow Pacing Bias	Constant
SPE410	-	Prop Manual Output Speed	%
SPJ410	-	XDCR Fail Pacing	%
SPK410	-	PID Manual Output Pacing	%
SPL410	-	Manual Out Pacing Signal	%
SPM410	-	PID Control Variable	PPM
SPQ410	-	Free CL2 Setpoint	PPM
TDH410	-	Rotate SHC Pump Setpoint	HR
TDS410	-	SHC Pump Start Dly	Seconds
TDT410	-	SHC Pump Stop Dly	Seconds

TIMERS:

KH410	-	Rotate SHC Pump Dly	HR
KS410	-	SHC Pump Start Dly	Seconds
KT410	-	SHC Pump Stop Dly	Seconds

COUNTERS/TOTALIZERS:
None

3. CONTROL:

a. SHC Call XU410 when Valve is open:

1) If the Filter Effluent Valve (V203) status is in Open position Z203A, for the duration of start delay TDS410 (timer KS410); then set SHC Call SA410.

2) If the Filter Effluent Valve (V203) status is not Open Z203A, for the duration of start delay TDT410 (timer KT410); then reset SHC Call SA410.

b. The sequence of the SHC pump to be called shall be per the code number set in register SP410. When a new code number is set in register SP410 the sequence shall be changed per the following definitions

	SHC CALL SEQUENCE	
CODE	LOGICAL OUTPUT	
NUMBER	Pump P411	Pump P412
SET IN	Call XU411	Call XU412
SP410	Assignment to	Assignment to
0 *	ROTATE	
12	SA410	
21		SA410

*Rotation indicates automatic alternation upon lead Chem Pump runtime exceeding rotation setpoint. The following (part 1, 2) is a typical control strategy

for the rotating the lead SHC Pump P411. Pump calls (XU411, XU412) set/reset shall follow this format:

1) If P411 is called X411,
AND P411 is in lead as indicated by SA410;
then enable Rotate SHC timer KH410.

2) If P411 is called X411,
AND P411 is in lead as indicated by SA410;
AND Rotate SHC runtime KH410 is greater than Rotate Setpoint TDH410;
then reset P411 call XU411,
AND set KH410 to 0,
AND rotate Chem Pump sequences between the two pumps.

c. SHC Pump Control

3) If Pump P411 call XU411 has been Enabled,
AND Pump P411 Hi Pressure PAHX411 is normal,
then set X411 to Start Pump with Pacing Signal by SC411
AND set SC411 to SC410.

4) If Pump P411 call XU411 has been Disabled,
OR Pump P411 Hi Pressure PAHX411 is Active,
then reset X411 to Stop Pump
AND set SC411 to 0.

d. Manual Pacing Signal Control (Control Mode SPA410 = 1):

1) If SPA410 is in Manual then set AC410 to Manual Output Pacing Signal SPL410.

e. Proportional Pacing Signal Control (Control Mode SPA410 = 2):

2) If SPA410 is in Proportional then set AC410 to the Proportional Pacing Signal SPB410. SPB410 is calculated from a Ratio and Bias:

Ratio: SPC410
Bias:SPD410

SPB410 = (SPC410 * (F271)) + SPD410.

3) If FAHL271 indicates transducer fail,
AND SPA410 is in Proportional Pacing
then SPB410 shall be set to SPF410.

f. PID Pacing Signal Control (Control Mode SPA410 = 3):

4) PID410 Controller Assignment:

Process Variable	A281
Setpoint	SPQ410
Control Variable	Manual-Auto control selector switch (YM410) selects the value for PID Control Variable SPM410 between SPID410 (calculated PID output) and SPK410 (manual entered output)
P - Proportional	P410
I integral	I410
D Derivative	D410
Maximum PID Output	MX410
Minimum PID Output	MN410

5) If AAHL281 indicates Effluent pH transducer fail;
AND Control Mode SPA410 is 3,
then set SPM410 to XDCR Fail Pacing SPJ410.

4. TIMERS:

a. See timer KH410, KS410 and KT410 in part 3 Control.

5. CALCULATIONS:

a. None.

6. ALARMS:

a. None.

C. P&ID: I05
CS: #421 (& 422 & 431 & 432)
LOCATION: McCandless Well Facility
TITLE: Ferric Chloride (& Ammonium Sulfate) System

1. DESCRIPTION:

This strategy controls the automatic physical starting and stopping of the Sodium Hypochlorite pumps. When in automatic mode, the chemical system is paced on Filter Effluent flow (F271) or free chlorine residual (A281). Pumps will alternate on run time.

CS #	Pump #	Chem	Tank	PSH	Tag #
421	P421	FC	L452	PAHX421	421
422	P422	FC	L452	PAHX422	422
431	P431	AS	L453	PAHX431	431
432	P432	AS	L453	PAHX432	432

Sodium Hypochlorite transfer pump is operated locally with a spring loaded Hand-Off switch. Transfer pump moves the chemical from the tote to the day tank.

2. INPUTS / OUTPUTS:

LOGICAL INPUTS:

PAHX421	-	Pump P421 Hi Pressure	Lockout/Ok
FAHL271	-	Filter Effluent Flow XDCR	Fail/Ok
YM420	-	PID Process Ctrl Variable	Auto/Manual
Z203A	-	V203 Effluent Valve	Open/Null

LOGICAL OUTPUTS:

SA420	-	FC Call Sequence	Enabled/Disabled
XU421	-	P111 Call	Enabled/ Disabled
XU422	-	P112 Call	Enabled/ Disabled
X421	-	P421 Call	Start/Stop

VARIABLE INPUTS:

F271	-	Filter Effluent Flow	GPM

VARIABLE OUTPUTS:

SC420	-	P421 Pacing Signal Out	%
SC421	-	P421 Pacing Signal Out	%

SETPOINT REGISTERS:

SP420	-	FC Feed Pump Mode	#
SPA420	-	Control Mode	Code #
SPB420	-	Proportional Pacing Signal Out	#
SPC420	-	Flow Pacing Ratio	Constant
SPD420	-	Flow Pacing Bias	Constant
SPE420	-	Prop Manual Output Speed	%

SPL420	-	Manual Out Pacing Signal	%
TDH420	-	Rotate FC Pump Setpoint	HR
TDS420	-	FC Pump Start Dly	Seconds
TDT420	-	FC Pump Stop Dly	Seconds

TIMERS:

KH420	-	Rotate FC Pump Dly	HR
KS420	-	FC Pump Start Dly	Seconds
KT420	-	FC Pump Stop Dly	Seconds

COUNTERS/TOTALIZERS:
None

3. CONTROL:

a. FC Call XU420 when Valve is open:

1) If the Filter Effluent Valve (V203) status is in Open position Z203A, for the duration of start delay TDS420 (timer KS420); then set FC Call SA420.

2) If the Filter Effluent Valve (V203) status is not Open Z203A, for the duration of start delay TDT420 (timer KT420); then reset FC Call SA420.

b. The sequence of the FC pump to be called shall be per the code number set in register SP420. When a new code number is set in register SP420 the sequence shall be changed per the following definitions

	FC CALL SEQUENCE	
CODE	LOGICAL OUTPUT	
NUMBER	Pump P421	Pump P422
SET IN	Call XU421	Call XU422
SP420	Assignment to	Assignment to
0 *	ROTATE	
12	SA420	
21		SA420

*Rotation indicates automatic alternation upon lead Chem Pump runtime exceeding rotation setpoint. The following (part 1, 2) is a typical control strategy for the rotating the lead FC Pump P421. Pump calls (XU421, XU422) set/reset shall follow this format:

1) If P421 is called X421,
AND P421 is in lead as indicated by SA420;
then enable Rotate FC timer KH420.

2) If P421 is called X421,
AND P421 is in lead as indicated by SA420;

AND Rotate FC runtime KH420 is greater than Rotate Setpoint TDH420;
then reset P421 call XU421,
AND set KH6621 to 0,
AND rotate Chem Pump sequences between the two pumps.

c. FC Pump Control

1) If Pump P421 call XU421 has been Enabled,
AND Pump P421 Hi Pressure PAHX431 is normal,
then set X421 to Start Pump with Pacing Signal by SC421
AND set SC421 to SC420.

2) If Pump P421 call XU421 has been Disabled,
OR Pump P421 Hi Pressure PAHX431 is Active,
then reset X421 to Stop Pump
AND set SC421 to 0.

d. Manual Pacing Signal Control (Control Mode SPA420 = 1):

1) If SPA420 is in Manual then set AC420 to Manual Output Pacing Signal SPL420.

e. Proportional Pacing Signal Control (Control Mode SPA420 = 2):

1) If SPA420 is in Proportional then set AC420 to the Proportional Pacing Signal SPB420. SPB420 is calculated from a Ratio and Bias:

Ratio: SPC420
Bias:SPD420

SPB420 = (SPC420 * (F271)) + SPD420.

2) If FAHL271 indicates transducer fail,
AND SPA420 is in Proportional Pacing
then SPB420 shall be set to SPF420.

4. TIMERS:

a. See timer KH420, KS420 and KT420 in part 3 Control.

5. CALCULATIONS:

a. None.

6. ALARMS:

a. None.

END OF SECTION

SECTION 16940

INSTRUMENTATION

PART 1 - GENERAL

1.01 SCOPE OF WORK

A. Provide all devices, wiring, terminal blocks, accessories, and enclosures as specified herein and as shown on Contract E-Series Drawings for the instrumentation system. The Contract Documents are intended as an outline for the work and are descriptive of the type of hardware and software configuration to be provided. Any error or omission of detail shall not relieve the Contractor from the obligations thereunder to provide and install in correct detail any and all materials necessary for a complete operational instrumentation system, at no additional cost to the City.

B. The major components in the instrumentation scope of work are:

1. Provide/install instrumentation system as shown and specified herein and in Division 16 and shown on Contract I-Series Drawings.

2. Supply, and install the RTU backpan provided by Others.

3. The System Supplier shall provide all instrumentation and devices as listed in Appendix "A" Device (Instrument) Index for this Section 16940. Instrumentation devices may not be shown on Mechanical Drawings. All instrumentation devices shall be provided and installed by the Contractor at the locations in the process as shown on the Contract I-Series Drawings. It is the Contractor's responsibility to install all new instruments per manufacturer's installation requirements even if not specifically shown on the Contract Drawings.

4. All necessary piping and valves to complete installation.

5. Instrument supports and enclosures per Contract Drawings E-Series details.

6. PLC programming and SCADA Central PC (OI) graphic and programming additions to be performed by Others.

C. The contract documents are not intended to cover every detail of materials, software, hardware, configuration, or construction. The Contractor shall furnish all tools, temporary utilities, materials, setup, parts, labor, and other incidentals necessary to fully complete the entire work, whether or not said details are particularly shown or specified, all at no additional cost to the City.

D. Ranges for instruments shall be as shown on Device (Instrumentation) Index in Appendix "A" or as marked-up during Submittal. Process setpoints will be provided by City during Submittal process, testing, and startup.

E. All equipment, hardware, and software shall be licensed to the City. Contractor shall provide all programming cables, interconnecting cables and software licenses for all PLC and VFD to the City Staff as part of start-up. Licenses shall be made in City's name.

F. Provide all necessary hardware, conduit, wiring, fittings, and devices to connect the instrumentation equipment provided under other Sections. The following shall be done by the Contractor at no additional cost to the City:

1. Provide additional devices, wiring, conduits, relays, isolators to complete interfaces of the instrumentation system.

2. Changing normally open contacts to normally closed contacts or vice versa.

3. Adding additional relays to provide more contacts as necessary.

4. Provide all necessary miscellaneous shut off, sample, and calibration valves to sensors.

1.02 RELATED WORK

A. Installation of primary elements which require placement into or taps off of a process flow line are included under Division 15000 Mechanical. Electrical equipment interface and conduit for instrumentation is covered in Section 16010 - Electrical. All of the wiring and component requirements of Division 16 apply to this Section.

1.03 COORDINATION

A. Prior to commencing the first submittal, the Contractor shall arrange a conference with the Citys, and Electrical Contractor, System Supplier vital to the current phase of work, and shall verify types, sizes, locations, and installation requirements. The Contractor shall, in writing, inform the Engineer that all phases of coordination of this equipment have been covered and if there are any unusual conditions, they shall be enumerated at this time.

1. No passwords shall be enabled on software or hardware developed for this project. All electronic disk copies provided to City shall not have any password protection enabled on them or the software. Software submitted with password protection will be removed by City and the Contractor will be backcharged for the cost thereof.

1.04 SUBMITTALS

A. Provide submittals and drawings as specified in Section 16010 - Electrical, SUBMITTAL AND DRAWING REQUIREMENTS.

B. Submit for approval a mounting, piping, and valving detail drawing for each instrument. These drawings shall be dimensioned, drawn to scale with a material list of all components and supports.

C. Contractor shall submit letter listing all flowmeter element (FE) pipe sizes, flange types, and ANSI ratings signed by Contractor and System Supplier to certify coordination for proper installation prior to flow elements being purchased.

D. Submit load calculations of all connected 120VAC loads listed individually in a spreadsheet showing UPS run time with all UPS listed loads in operation.

1.05 OPERATION AND MAINTENANCE MANUALS

A. Provide operating instructions as specified in Section 16010 - Electrical, OPERATION AND MAINTENANCE MANUALS.

1.06 DEVICE INDEX

A. The Device Index spreadsheet in Appendix "A" is a tabulation of the major pieces of instruments required for this project.

PART 2 - MATERIALS

2.01 QUALITY

A. Quality included that specified in Section 16010 - Electrical.

B. All equipment shall be designed and constructed so that in the event of a power interruption, the equipment specified hereunder shall resume normal operation without manual resetting or operator interaction when power is restored.

C. Signal transmission from remote or field electric and electronic devices shall be 4-20 mA, sourced by a 24 VDC loop supply from the panel that is to receive the signal. Nonstandard transmission methods such as impulse duration, pulse rate, and voltage regulated will not be permitted except where specifically noted.

D. Outputs of equipment that are not of the standard signals as outlined, shall have the output immediately raised and/or converted to compatible standard signals for remote transmission.

2.02 CONDUCTORS AND WIRE MARKERS

A. Conductors and wire markers shall be as specified in Section 16120 - Wire, Fuses & Terminal Blocks.

2.03 SUBMERSIBLE LEVEL TRANSMITTER:

A. The submersible level transmitters shall be a loop powered two wire 4-20 mA linear transmitting device proportional to the applied direct pressure of the submerged element. The submersible probe shall be rated for use in water well applications. The transmitter shall have an accuracy +/- 1 5% of span. Minimum operating temperature range shall be 15 degrees Fahrenheit to 122 degrees Fahrenheit. Provide length of submersible cable per instrumentation index. Extra cable shall be coiled up. The submersible level transmitter shall be Druck Smart Check Well, Vegawell 52 or approved equal.

2.04 LEVEL SWITCHING DEVICE

A. Potable Water

1. Each level switch shall utilize a Polypropylene float which moves with liquid level to actuate a hermetically sealed (non-mercury) microswitch. The level switch shall have Form "C" contacts with a minimum electrical with switch rating of 16 Amp

at 120VAC. The float switch shall be suspended mounted with a counterweight. The level switch shall be MJK7030, Danfoss 7030, or approved equal.

2. Provide six hook stainless steel mounting bracket for supporting level instruments to wetwell wall, USA Blue Book 47715 or approved equal.

B. Flood Switch

1. The flood switch shall utilize a Buna-N level with slosh shield that moves with liquid level to actuate a SPST (single pole, single throw) NC switch. The switch contact shall open with rising level. The level switch shall have a minimum electrical switch rating of 20 VA. The level switch shall have an operating temperature range of -40°F to +180°F. The level switch shall be bracket mounted with PVC cable of sufficient length to reach bottom of the drywell.

2. Level switch shall be compatible with liquid measured. The level switch shall be a Gems LS-250, FCI or approved equal.

2.05 PRESSURE INDICATING TRANSMITTER

A. The Sensor Module:

1. The pressure transmitter shall incorporate a high-accuracy capacitance sensor. With this sensor, process pressure is transmitted through the isolating diaphragm and fill fluid to the sensing diaphragm in the center of the capacitance cell. Capacitor plates on both sides of the sensing diaphragm detect its position. The differential capacitance between the sensing diaphragm and the capacitor plates shall be directly proportional to process pressure.

2. The transmitter shall incorporate a temperature measurement to compensate for thermal effects.

3. The pressure transmitter electronics shall convert the capacitance and temperature input signals directly into digital format for further processing by the electronics module.

4. Configuration data shall be stored in nonvolatile EEPROM memory in the electronics module of the transmitter.

B. Software Functionality:

1. Configuration: The transmitter shall be configured by the System Supplier. Configuration shall consist of operational/parameters and informational data.

2. Test: The pressure transmitter shall perform continuous self-tests.

3. Format: The format function is used during the initial setup of a transmitter and for maintenance of the digital electronics.

C. Specifications:

Output:	Two-wire 4-20 mA output. Digital process variable superimposed on 4-20 mA signal.

Power Supply:	Loop Powered.
Indication:	4-digit LCD meter.
Zero Elevation and Suppression:	Anywhere within the sensor limits.
Overpressure Limits:	Limit is 0 psig to 3,626 psig (25 Mpa) without damage to the transmitter.
Temperature Limits:	Process: 0° F to 185°F (-18° C to 85°C). Ambient: -4° F to 175°F (-20° C to 80°C).
Humidity Limits:	0 – 100% relative humidity.
Accuracy:	±0.075% of span for spans from 1:1 to 10:1 of URL.
Stability:	±0.2% of URL for 12 months.
Process-Wetted Parts:	Isolating Diaphragms: 316 SST. Drain/Vent Valves: 316 SST. Flanges: 316 SST. Wetted O-rings: Glass-filled TFE.

D. The pressure transmitter shall be Rosemount Smart family 3051TG, Foxboro or approved equal.

E. CALIBRATION VALVE Each calibration valve assembly shall have integral stainless steel block and bleed valving. Valve shall have a non-rotating tip stem and a fully back-seated bonnet. Block and bleed valve shall be Hex HB59 (phone 800-543-7311) or approved equal.

2.06 PRESSURE SWITCH

A. Water – Pressure switch shall be a rated minimum of 15 amps @ 120VAC. Pressure switch shall consist of a pressure sensing mechanism and the switch itself enclosed in a NEMA rated housing with ranges as listed in the Pressure Device Index. Pressure switch shall be of the bourdon tube type with stainless steel wetted parts and mechanical snap switch (mercury switches not acceptable). Pressure switch shall be equipped with two independent setpoint adjustments (trip & reset setpoints) settable from exterior of unit. Pressure switch shall have transparent viewing window for visible on-off operation. Switch shall have two tamperproof setpoint adjustments with setpoint indicator calibrated in engineering units. Pressure switch shall be UL listed. The pressure switch shall be Dwyer Mercoid Control DAW series; Square “D” or approved equal.

B. Chemical pump pressure switches shall be provided with diaphragm seal. Diaphragm shall be tantalum, clamped securely between top and bottom housing by clamp rings assuring positive seal. Seal shall be non-metallic and provided with Glycerin filling fluid with direct 1/2" connection to pressure indicator/switch. Diaphragm seal shall be rated for continuous duty and sized with diaphragm suitable for process application. Bottom housing shall be suitable for process application. Seal shall provide excellent corrosion resistance to acids, hypochlorite, caustic, alum, and others. Seal shall have minimal effect on instrument accuracy. Bottom housing shall be 316 Stainless Steel, unless otherwise noted, as follows:

	Chemical	Bottom Housing
1.	Sodium Hypochlorite	Titanium
2.	Ferric Chloride	Tantalum
3.	Ammonium Sulfate	316 Stainless Steel

4. The diaphragm seal shall be Ashcroft, Bristol Babcock or approved equal.

2.07 MAGNETIC FLOWMETER

A. The magnetic flow meter shall consist of a flow tube FE and a converter FIT, complete with all necessary interconnecting cables and conduits. The magnetic flow meter shall be of the low frequency electromagnetic induction type and shall produce a DC pulse signal directly proportional and linear to the flow rate, with the duration not less than 100 milliseconds. The meter shall be suitable for bi-directional flow with full scale flow rates from 3 to 31 feet per second. Complete zero stability shall be an inherent characteristic of the metering system. Meters requiring field zero adjustment will not be acceptable. The meter accuracy shall not be affected by changes in fluid pressure, temperature, viscosity, or conductivity.

B. Flange connections shall be ANSI Class 150 or flangeless type as required by mechanical Drawings. Flanges shall be coordinated with Contractor installing piping.

C. Stainless steel grounding rings shall be provided at both ends of the flow tube when required by the manufacturer. The tube internal liner material shall be polyurethane, unless recommended otherwise by the manufacturer for the application and approved by the Engineer. Electrode material shall be 316 stainless steel and shall be flush type. The meter shall incorporate a high impedance amplifier of 100,000 Megohms or greater, eliminating the need for electrode cleaning systems.

D. The converter electronics shall be mounted remotely as shown on Contract Drawings. The converter shall be microprocessor controlled, utilizing digital signal processing with automatic zero correction to provide a linear 4-20 mA signal proportional to the forward flow rate and switched output for flow totalization pulses. The electronics shall provide totalized pulse output and positive zero return control. Rangeability shall be field adjustable over a 100 to 1 range. Field adjustable signal dampening shall be provided. Low flow cutoff shall be provided to eliminate flow transients when no flow is present in the pipe. A rate indicator and totalizer scaled in engineering units shall be provided and shall be viewable on a LCD display. The converter shall have self-diagnostics which constantly check for proper operation. If a failure occurs, a fault indication shall be provided to notify the operator of a problem. The converter shall contain a self-test mode to allow the operator to manually simulate the output 4-20 mA signal to any value between 0% and 100% to check out any driven devices in the loop. The converter shall be rated to operate in an ambient temperature range from 14° F to 122 °F.

E. The meter, converter, and components shall be designed for operation from a power source of 24VDC, with a power consumption of less than 20 watts.

F. The flowmeter manufacturer shall supply the cable without splices from the flowtube to the remote electronics. Remote converter/indicator (FIT) shall be capable of being located up to 1000 feet from flow element (FE).

G. When converter electronics are shown to be mounted remotely, additional special cabling (Cabling between flow element and remote mounted flow indicating transmitter), mounting hardware, and devices necessary to complete the installation shall be provided by the manufacturer at no additional cost to the City. Electronics shall be provided in NEMA rated enclosures specified in Instrumentation and Device Index.

H. The meter shall be hydraulically calibrated at a facility located in the United States and the calibration shall be traceable to the National Bureau of Standards. A certified copy of the calibration test results shall be submitted to the City prior to shipment of the meter.

I. The accuracy of the complete metering system including flow tube and converter electronics shall be 0.25% of rate over the range settings of 0.033 to 33 feet per second. Variations in temperature, voltage, and frequency within the ranges listed herein shall not affect the accuracy in excess of 0.5% of flow rate.

J. The flowmeter element (FE) shall be accidental submergence proof for forty-eight hours under 30 feet of water. Conduits between flowmeter element and electronics shall be sealed to retain submergence rating per flowmeter manufacturer's requirements.

K. Flow transmitter shall be provided with Modbus communication protocol.

L. The flow meter shall be a Siemens MAG 5100W with MAG 6000 transmitter, with remote signal converter/indicator units, Endress + Hauser Promag or approved equal.

2.08 FLOW SWITCH

A. The flow switch shall be vane operated to actuate one single-pole double throw snap switch. Flow switch shall be stainless steel. The flow switch shall be sized per the piping. The flow switch shall have a minimum electrical switch rating of 10A at 125VAC. The flow switch shall be W.E. Anderson (Dwyer) V series, Omega, or approved equal.

2.09 INTRUSION SWITCHES

A. Building Door Security Switch - Each intrusion door switch shall have a wide gap magnetic sensor with S.P.D.T. contacts mounted in a rugged steel housing with a 3 foot stainless steel armored cable for wiring to a junction box. Intrusion door switches shall be Sentrol 2507-A, or approved equal.

B. Roll-up Door Magnetic Security Switch - Each Roll-up door security switch shall be designed specifically for panel or sectional style overhead doors and heavy-duty applications. Each overhead intrusion switch shall have a wide gap magnetic sensor with SPDT contacts in aluminum housing and 3-foot stainless steel armored cable for wiring to junction box. Magnetic switch shall be rated at 3W maximum. Roll-up door magnetic security switch shall be Sentrol 2207A-L or approved equal.

2.10 SMOKE DETECTOR

A. Ceiling mounted smoke detectors shall be an ionization type designed to automatically detect the smoke created by a fire. The detector shall be housed in a flame retardant plastic housing and shall be unaffected by vibration. Detector shall be sealed against dirt, insects and back pressure. Each smoke detector shall have the following minimum features:

1. Field adjustable sensitivity and field metering of detector sensitivity.

2. Have an operating temperature of 0 to 49 degrees C (32 to 120 degrees F) and an operating humidity of 10 to 93% relative humidity.

3. Have built-in test switch and 360 degree view angle of built-in alarm LEDs.

2.11 CHLORINE RESIDUAL ANALYZER

A. Description: Directly-measuring a continuous flow of treated process water to determine free chlorine residual level.

B. The microprocessor based analyzer shall display the residual in range show on in the Instrumentation and Device Index.

C. The measuring cell shall provide continuous on-line measurement of residual levels down to 0.01 PPM (0.01 mg/L).

D. The analyzer shall include all required flow and pressure regulators, flow cell, and valves for specific installation.

E. The analyzer shall have the capability of on-site conversion to either free or total residual chlorine analysis by station personnel.

F. Operating temperature: 5° C to +40° C.

G. Analyzer Electronics.

1. The analyzer shall be controlled by microprocessor based electronics powered from 120 VAC. Analyzer shall be protected from voltage fluctuations commonly found in water/wastewater applications.

2. Analyzer electronics shall be enclosed in an IP 65 polycarbonate enclosure.

3. User interface shall include a touch keypad and backlit sunlight readable LCD display.

4. Alarm conditions shall be identified through the display.

5. Provide automatic pH compensation for the free chlorine measurement that can be turned on/off by the operator.

6. An isolated 4 to 20 mA output signal shall be provided proportional to the residual on a continuous basis. Output signal shall be configurable to desired span without recalibration of the sensor.

7. Two (2) user configurable alarm relays shall be provided alarm and diagnostic conditions.

   a. Relay contacts shall be rated 5 amperes at 230 V.

H. Acceptable manufacturer: Hach CL17, Kuntze Krypton Multi Stabiflow analyzer or approved equal.

2.12 WATER DISTRIBUTION MONITORING PANEL

A. Panel:

1. Backpan shall be prewired and plumbed with all instruments secured. Backpan shall be mounted in NEMA 4X 36” x 60” enclosure.

2. Provide common drain system for instruments.

3. Provide pressure and flow regulation in panel.

4. Provide pressure transducer to monitor water pressure at sample manifold. Pressure sensor shall have an accuracy of + / - 0.25% and transmit 4-20mA signal (0-150PSI). Pressure sensor shall be Gems 2200 or approved equal.

5. All analytical devices supplied in water distribution monitoring panel shall be by a single manufacturer.

6. Panel shall be operate on 120VAC power, 500W. A single connection shall power all components for Water Distribution Panel.

7. Water Distribution Monitoring Panel shall be Hach WDMP sc or approved equal.

B. Controller:

1. Controller shall have TFT color touchscreen and consist of a probe module and display module. Controller shall have eight fully scalable 4-20mA outputs and Ethernet port for configuration. Controller shall be Hach sc1000 Controller LXV402.52.00002 Display module with LXV probe or approved equal.

C. Analytical Instruments:

1. Total Chlorine Analyzer shall measure total chlorine using the DPD colorimetric method. Range shall be 0-5 PPM. Analyzer shall be provided with LCD display. Chlorine residual analyzer shall be Hach CL-17 or approved equal single manufacturer.

2. Turbidity Analyzer shall have range of 0-100 NTU. Optical components shall be mounted on a head assembly removable from the turbidimeter body. Turbidimeter shall have a built-in bubble removal system. Turbidimeter shall be Hach 1720E or approved equal single manufacturer

3. pH analyzer shall have a range of 2 – 14 pH and be inline. pH sensor shall use the differential electrode technique and have built-in temperature sensor. Sensor calibration shall be stored in the sensor, not a remote controller. pH sensor shall be GLI probe PDD1R1-WDMP or approved equal.

4. Conductivity analyzer shall have a rand of 0-2000 uS/cm. Sensor calibration shall be stored in the sensor, not a remote controller. Conductivity cell shall be GLI probe 3422C3A-WDM.

2.13 AMMONIA MONOCHLORAMINE ANALYZER

A. Panel:

1. Panel shall be NEMA 4X 804mm x 452mm enclosure.

2. Provide common drain system for instruments.

3. Provide pressure and flow regulation in panel.

4. All analytical devices supplied in water distribution monitoring panel shall be by a single manufacturer.

5. Panel shall be operate on 120VAC power. A single connection shall power all components for the Panel.

6. Ammonia monochloramine analyzer shall be Hach 5500sc or approved equal.

B. Controller:

1. Controller shall have a color 5.7" LCD screen with dashboard view. Unit shall have four (4) each Form C relays, 5 amps at 30VDC and four (4) each 4-20mA outputs for:

   a. Total Ammonia
   b. Free Ammonia
   c. Monochloramine
   d. Calculated radio

C. Analytical Instruments:

1. Analyzer shall measure total ammonia, monochloramine and free ammonia. Accuracy shall be + / - 5% with a repeatability of 3%. Response time shall be within 5 minutes.

2.14 ULTRASONIC FLOWMETER

A. Each ultrasonic level indicating transmitter shall be a microprocessor based echo-time ultra-sonic type providing an electrical level output signal proportional to the measured level.

B. Provide ultrasonic level elements with level indicating transmitters. Use the following models, or approved equal:

1. Flow Indicating Transmitter (FIT): Siemens Milltronics HydroRanger 200, Pulsar, or approved equal.

2. Level Element (LE) Transducer: To match LIT.

C. Provide level indicating transmitter (LIT) / signal converters meeting the following requirements:

1.	Power Supply:	Per device index.
2.	Measurement Range:	1 to 33 feet.
3.	Discrete Outputs:	5 relay outputs-SPDT contacts rated 5A/250 VAC; keypad function programmable.
4.	Analog Output:	Current-isolated 4 to 20mA into 1000 ohms max.
5.	Displays:	100mm x 40mm multifield backlit LCD display.
6.	Communications:	User interface via detachable infrared keypad programmer.
7.	Operating Temp.:	-5° F to 122° F.
8.	Temp. Compensation:	-58° F to 302° F.
9.	Resolution:	The greater of +/- 0.1% of range or 0.08 inches.
10.	Accuracy:	+/-0.25% or range.
11.	Memory:	Non-volatile EEPROM, no battery required.
12.	Enclosure Rating:	NEMA rated per Device Index.

D. Provide level element (LE) transducers meeting the following physical requirements:

1.	Mounting:	Support.
2.	Construction:	Kynar.
3.	Sensor Material:	Standard Construction.
4.	Temp. Compensation:	Internal.
5.	Oper. Frequency:	43 KHz.
6.	Beam Angle:	6 degrees.
7.	Range:	1 to 33 feet maximum.
8.	Separation:	328 feet minimum between sensor and electronics without use of additional equipment.

E. Each flow element (FE) shall be supplied with sufficient cable length to reach the remote flow indicating transmitter (FIT) without the use of splices. Any cable that is found to be spliced shall be removed and replaced by the Contractor, at no cost to the City.

F. All programmable parameters shall be set up and entered by the System Supplier for flow measurement.

2.15 SUNSHIELD

A. System supplier to provide and install instrument sun shield 316 stainless steel enclosures over all field instruments, including instruments supplied under non-division 16 sections, exposed to direct sunlight. Sunshields shall be removable when requested by Engineer during construction. All hardware shall be 316 stainless steel and installed to allow easy servicing of instruments. Sunshield shall have 316 stainless steel or heavy rubber fold down front shade in front of instrument/device to protect from sun exposure. Shade shall open to 270 degree to lay flat on top of sunshield. Backside of each sunshield shall face south or west when installed over instrument.

2.16 FIELD CONTROL STATION AND CONTROL PANELS

A. General:

1. Boxes:

a. Boxes shall be U.L. listed with steel box NEMA rating per Device Index.

b. Box dimensions shall be in accordance with size, quantity of conductors, and conduit clearances per NEC Article 370 Requirements.

c. Larger panels or boxes shall be provided to accommodate special temperature and moisture monitoring relays for pumps at no additional cost to City. Provide all associated wiring, drawings, etc. at no additional cost to City.

2. Provide nameplates per subsection nameplates.

3. Devices shall be provided as specified under subsection components.

2.17 CONTROL PANEL

A. Control panel backpan will be provided by Others for System Integrator to install.

B. Provide metal data pocket within each enclosure to hold as-built drawings.

C. Provide label on Control Panel door, below door handle, identifying all sources of foreign power (i.e. “Control Panel Fed from LP1-Ckt#4”, “Fans & Lights Fed from LP1-Ckt#2”, etc.). Label shall be white plastic with black machine printed lettering as produced by a KROY or similar machine with lettering no smaller than 3/8”. Securely attach to door with clear tape.

2.18 TUBING, FITTINGS AND VALVES

A. Instrument Tubing, Fittings, and Valves:

1. Tubing:

a. Seamless 316 stainless steel.

b. Fully annealed.

c. Maximum hardness: 80 Rb.

d. Free from surface scratches and imperfections.

e. Diameter: 3/8-inch minimum outside diameter (OD) unless specified otherwise.

f. Wall thickness: Minimum 0.035 IN for 3/8-inch OD tubing.

2. Fittings:

a. Flareless.

b. Compression Type.

3. Valves:

a. All shutoff, calibration and sample valves shall be 316 stainless steel with construction rated for its application.

4. Supports:

a. Instruments shall be supported independent of connecting piping and valves.

b. Support Angles: 2 x 2 IN stainless steel channel.

c. Tubing Tray or Channel: Aluminum.

d. All hardware shall be stainless steel.

B. Acceptable Manufacturer:

1. Subject to compliance with the Contract mechanical specification sections, the following manufacturers are acceptable:

a. Parker CPI.

b. Swagelok.

PART 3 - EXECUTION

3.01 WORKMANSHIP

A. All instrumentation work in this contract shall conform to the codes and standards specified in Section 16010 - Electrical.

B. The Contractor shall employ personnel who are skilled and experienced in the installation and connection of all elements, equipment, devices, instruments, accessories, and assemblies. All installation labor shall be performed by qualified personnel who have had experience on similar projects. Provide first class workmanship for all installations.

C. Ensure that all equipment and materials fit properly in their installations.

D. Perform any required work to correct improper installations at no additional expense to the City.

E. The City reserves the right to halt any work that is found to be substandard or being installed by unqualified personnel.

F. Rejected equipment or equipment without approved submittals shall be immediately removed from the delivery or job site by the Contractor.

G. All Manufacturers' instructions are to be followed. One copy of O&M and installation instructions shall be made available to the City when equipment is first being installed.

H. All instruments installed by the Contractor shall be in accordance with the Drawings and the manufacturer's recommendations & instructions and shall operate to the Engineer's satisfaction. Follow all manufacturer's instructions for handling, receiving, installation, and pre-check requirements prior to energization. After energization, follow manufacturer's instructions for programming, set-up and calibration of equipment. The Contractor shall be responsible for, and shall correct by repair or replacement, at his own expense, equipment which, in the opinion of the Engineer has been caused by faulty mechanical or electrical assembly by the Contractor. Necessary tests to demonstrate that the operation of the instruments is satisfactory and meets the requirements of these Specifications shall be made by the Contractor.

3.02 INSTALLATION

A. General: Install and supply all products necessary, at no additional cost to the City, to provide an operational system. This shall include the following:

1. Contract Drawings are intended to show the basic functional requirements of the instrumentation system and do not relieve the Contractor from the responsibility to provide a complete and functioning system.

2. Provide relays, signal converters, isolators, boosters, power conditioners, circuit cards, and other miscellaneous devices as required for the proper interface.

3. Provide analog loop isolators where required to eliminate "ground loops."

4. All wires shall be identified with machine printed labels. Plastic wire gutters shall be used for routing of wire bundles. Wiring shall be neat and laced with plastic tie wraps.

5. The instrumentation and accessory equipment shall be installed in accordance with the manufacturer's instructions and located as shown on the Drawings or as approved by the Engineer. When manufacturer's installation literature specifies a particular location or orientation in a process line due to measurement accuracy considerations, the installation shall be in conformance with the manufacturer's instructions.

6. Engineering scales and charts for all instruments shall be provided that match the range of instruments that monitor the process.

7. Power to instruments and instrument loops shall be from a single source if possible providing the highest integrity: e.g., from the loop primary receiving instrument/module, or from a UPS when so specified. A loop shall not be dependent on a diversity of multiple power sources.

B. Instrument installation methods:

1. Install instruments at the location shown on the Plans or approved by the City. Instruments shall be NEMA rated for the installed location.

2. Install instruments per manufacturer's instructions at all times. Provide a copy of manufacturer's installation requirements to City prior to starting installation.

3. Sunshield: Provide instrument sun shield stainless steel enclosure over field electronic instruments exposed to direct sunlight with padlockable hinged door to view indicators and perform calibrations. All hardware shall be stainless steel and installed to allow easy servicing of instruments.

4. All instruments shall be provided with floor stands or wall brackets as shown or required.

5. Mounting hardware, stands, channels, and spacers shall be either galvanized steel, stainless steel, or non-metallic to match the NEMA rated location.

6. All screws and bolts shall be stainless steel.

7. Instrument and Device Mounting Requirements:

    a. Mount where they will be accessible from fixed ladders, platforms, or grade.

    b. Mount all indictors and controls with face forward towards the normal operating area, within reading distance, and in the line of sight.

    c. Mount level, plumb and support rigidly.

    d. Mount to provide:

        1) Protection from heat, shock, and vibrations.

        2) Accessibility for maintenance.

        3) Freedom from interference with piping, conduit, and equipment.

    e. Shall be mounted so that they can be readily approached and easily serviced with access to all covers without requiring disassembly of any support or accessory.

    f. Shall be located that they do not restrict access to other equipment.

    g. Instruments and devices not directly mounted shall be mounted on a pipe stand or enclosure supports.

8. Provide cable lengths for instruments listed in Device Index. When called out as manufacturer supplied cable (MNFR CBL); provide cables without splices, the length of the installed conduit run.

9. Instrument enclosures shall be NEMA rated per Device Index.

10. Connections from conduit systems to field instruments shall be made with jacketed liquidtight flexible metallic conduit with a maximum length of 3 feet.

11. All parameter set-up, calibration and programming for all instruments shall be performed by the Contractor at no additional cost to the City.

C. Wiring and raceway installation methods.

1. Instrumentation wiring shall be carried in conduits provided in compliance with the Section 16120 - Wire, Fuses & Terminal Blocks. All analog circuits shall be run as twisted pairs or triads. In no case shall a circuit be made up using conductors from different pairs or triads. Triads shall be used wherever three wire circuits are required. Triads are not to be formed by using two pairs. Terminal blocks shall be provided at all instrument cable junctions and all wires shall be identified at such junctions. Instrumentation wiring shall be run without splices between instruments, terminal boxes, or panels.

2. The number of signal wires listed on the drawings is approximate only, and the Contractor shall determine the required number of signal pairs or triads to properly connect the system furnished, especially when substituting equipment.

3. When stipulated “manufacturer supplied cable” (MNFR CBL) in the conduit schedule, it directs the Contractor to have the manufacturer supply the cable for the entire length of the installed conduit run.

4. All equipment and instrumentation located below grade shall have conduit drain boxes and plug conduit interior sealant to form an effective barrier to keep out water from traveling down conduit into equipment and instrumentation at no additional cost to the City.

5. Use bottom entry only for all conduits connected to instruments.
6. Install water proof seals on all conduits to outdoor instruments located below grade. Installation shall be such that liquid shall not enter instrument or enclosure to which the conduit is connected.

D. Tubing Installation Methods:

1. General:

a. Install such that tube shows no sign of crumpling, bends of too short a radius, or flattening, etc.

b. Make tube runs straight and parallel or perpendicular to the floor, equipment and piping runs. Gang multiple tubing runs using common support.

c. For liquid and steam applications, slope continuously from the process to the instrument with a minimum slope of ½” per foot.

d. For gas and air applications, slope continuously from the instrument to the process with a minimum slope of ½” per foot.

e. If the sensing line cannot be continuously sloped, install high point vents and low point drains.

f. Keep instrument tubing clean during all phases of work.

g. Blow out with clean, dry, oil-free air immediately before final assembly.

h. Remove paint and dirt from tubing before final acceptance.

2. Stainless Steel Tubing:

a. Cut by sawing tool for tubing and debur.

b. Make each bend with tube bender of the correct size for the tube.

c. Make all bends smooth and continuous.

d. Rebending is not permitted.

e. Make bends true to angle and radius.

f. Maintain a true circular cross section of tubing without buckling or undue stretch of tube wall.

g. Allowable tolerance for flattening out of tubing bends: Maximum of 8 percent of the OD.

h. Minimum bending radius:

Minimum Bending Tube OD Inches	Radius, Inches
¼"	1"
3/8"	1½"
½"	2"

3. Tubing support:

a. Intermittently support by clamping to support angle.

b. Install supports to be self-draining, supported by hangers, or cantilevered from walls or structural beams.

c. Support at 5 feet maximum spans for horizontal or vertical runs.

d. Use tubing trays in areas where spans between supports are greater than 5 feet.

e. Support each tubing tray at 10 foot maximum spans.

f. Align tubing in orderly rows and retain in the tray by bolted clips. The use of springs or speed clips is not acceptable.

g. Maintain order of the tubing throughout the length of the tray.

h. Locate angle, channel and tray installation to protect tubing from spills and mechanical damage.

i. Locate support members to clear all piping, conduit, equipment, hatchways, monorails, and personnel access ways and allow access for equipment operation and maintenance.

j. Support trays to prevent torsion, sway or sag.

k. Permanently attach support to building steel or other permanent structural members.

l. Arrange supports and trays so that they do not become a trough or trap.

4. Routing and orientation:

a. Route to maintain a minimum headroom clearance of 8 feet.

b. Locate and orient valves and specialties so that they are accessible for operation and maintenance from the operating floor without the use of a step or ladder. Do not route through or over equipment removal areas, below monorails or cranes nor above or below hatches.

5. Expansion and vibration provisions:

a. Provide horizontal expansion loops at the process connections.

b. Route tubing parallel to relative motion through sleeved supports that allow linear tube movement.

c. Cold springing of tubing to compensate for thermal expansion is prohibited.

d. Utilize flexible hoses to connect pneumatic tubing to air users which may move or vibrate.

E. Wiring, grounding, and shielding methods - It is important to observe good grounding and shielding practices in the generally noisy environment in this application. The following practices shall be observed unless modified by manufacturer's standards:

1. Each electronic equipment chassis shall be grounded to power ground.

2. All analog signals shall be transferred over shielded twisted pair cables.

3. All communication signals shall be transferred over shielded cables.

4. All shields of analog inputs to the PLC shall be connected at the PLC unit only. They shall not contact ground at any other point including the transmitters.

5. All shields of analog outputs from the PLC shall be grounded only at the receiving device. They shall not contact ground at any other point including the PLC.

6. Status and alarm signals routed through noisy environment shall be transferred over shielded twisted pair cables.

7. Each shield which is not connected to ground shall be covered with a heat shrink insulating boot. Shields shall be connected together at each transition from one cable to another for a continuous effective shield circuit. All shields shall be connected on terminal blocks.

8. Isolator modules shall be provided within the panel for field equipment creating a ground loop.

9. Negative side of each power supply shall be solidly bonded to ground bus.

3.03 SUPPLIER SERVICES

A. The Contractor shall be responsible for each supplier of equipment to provide the following minimum services for each type of instrument supplied. The supplier shall use a qualified instrumentation field technician (sales representatives are not acceptable) to

perform services listed herein.

1. Shall use a qualified instrumentation field technician (sales representatives are not acceptable) to perform services listed herein. Technician shall be authorized or certified by instrument manufacturer and factory trained to install and start-up instrument. Provide resume of technician and related experience with related instrument prior to installation.

2. Perform instrumentation field tests as specified in Section 16010 - Electrical.

3. Advise and instruct Contractor on installation requirements.

4. Check, calibrate, and place equipment in operation.

5. All programmable devices shall be programmed and tested prior to startup. Programming shall be adjusted or changed as directed by the City or Engineer, at no additional cost.

6. Coordinate with the City and setup all alarm, process, and operation setpoints.

7. Perform the acceptance tests.

8. Visit the job as often as required and spend as much time as necessary to ensure an operational instrumentation system.

9. Be readily available by telephone to answer all questions on supplied equipment.

10. Provide training.

B. The Contractor shall ensure each supplier of instrumentation assumes the responsibility for providing primary elements in a timely manner, for insertion into the process line, coordinating size and material type when applicable, overseeing the actual installation, calibration, and acceptance testing.

C. PLC Software Configuration: The instrumentation supplier shall provide the completely configured and programmed PLC for the each site.

3.04 ACCEPTANCE TESTS

A. Provide Instrumentation Acceptance testing per Section 16010 – Electrical, TESTING.

B. The completion of the above tests does not relieve the Contractor from warranties specified elsewhere in this Section.

3.05 TRAINING

A. Each supplier shall provide a minimum of one (1) hour of training to instruct City personnel in the use, operation, calibration, programming, and maintenance on each different type of "field" instrument. This applies to field devices listed in Appendix A.

B. Refer to Section 16010 – Electrical, Training for additional training requirements.

3.06 SPARE PARTS

A. Provide spare parts as specified herein.

1. Provide Chemicals for Analyzers: 2-year supply. 2-year supply of any other expendables required for operation of instruments.

B. Refer to Section 16010 - Electrical, SPARE PARTS for additional spare parts requirements.

3.07 WARRANTY

A. Provide warranty as specified in Section 16010 - Electrical, WARRANTY.

3.08 FINAL ACCEPTANCE

A. Provide final acceptance as specified in Section 16010 - Electrical, FINAL ACCEPTANCE.

B. At the end of the project, following the completion of the field tests, and prior to final acceptance, the Supplier shall provide the following to the City:

1. A listing of all programming and setup parameters for all instruments for insertion into the O&M manual.

SECTION 16940
APPENDIX "A"

DEVICE INDEX

16940 INSTRUMENTATION DEVICE INDEX

P&ID DWG	E DWG	M DWG	TAG	NO.		DESCRIPTION	TYPE	SPECS	MINIMUM NEMA RATING	SIZE	VOLT	SP / RANGE	UNITS	DWG REF DET MOUNTING	NOTES AND ACCESSORIES	16010 TEST FORM
I03	E30C	M01	AE	281		Analytical Element	CL2	16940-2.11	-	-	-	-	-	Panel		-
I03	E30C	M01	AE	282		Analytical Element	WDMP	16940-2.12	-	-	-	-	-	Panel		-
I03	E30C	M01	AE	283		Analytical Element	WDMP	16940-2.13	-	-	-	-	-	Panel		-
I03	E30C	M01	AIT	281		Analytical Indicating Xmtr	CL2	16940-2.11	-	-	120 Vac	0-5.00	PPM	M01		TF-14
I03	E30C	M01	AIT	282		Analytical Indicating Xmtr	WDMP	16940-2.12	-	-	120 Vac	multi	-	M01	Tot CL2, Turb, pH, Cond Temp	TF-14
I03	E30C	M01	AIT	283		Analytical Indicating Xmtr	WDMP	16940-2.13	-	-	120 Vac	multi	-	M01	Tot Ammonia, Chlor, Ammonia	TF-14
I05	E30C	-	FCS	410		Field Control Station	SS	16940-2.16	4X	-	120VAC	-	-	E12-D		TF-6
I06	E30C	-	FCS	420		Field Control Station	SS	16940-2.16	4X	-	120VAC	-	-	E12-D		TF-6
I07	E30C	-	FCS	430		Field Control Station	SS	16940-2.16	4X	-	120VAC	-	-	E12-D		TF-6
I02	E21	M08	FE	171		Flow Element	Prop	by Valley Wtr	-	6"	-	-	-	E13-F		-
I03	E22	M02	FE	271		Flow Element	Mag	16940-2.07	-	6"	-	-	-	E13-F		-
I04	E30C	M01	FE	371		Flow Element	Mag	16940-2.07	-	3"	-	-	-	E13-F		-
I04	E21	-	FE	373		Flow Element	Ultra	16940-2.14	6P	-	24Vdc	-	-	E13-I		-
I02	E21	M08	FIT	171		Flow Indicating Xmtr	Prop	by Valley Wtr	-	-	24Vdc	0-1300	GPM	FIT		TF-14
I03	E22	M02	FIT	271		Flow Indicating Xmtr	Mag	16940-2.07	-	-	24Vdc	0-1300	GPM	FIT		TF-14
I04	E30C	M01	FIT	371		Flow Indicating Xmtr	Mag	16940-2.07	-	-	24Vdc	0-200	GPM	FIT		TF-14
I04	E21	-	FIT	373		Flow Indicating Xmtr	Ultra	16940-2.14	4X	-	24Vdc	0-400	GPM	E12-D		TF-13
I02	E30C	M06	FSH	172		Flow Switch	Vane	16940-2.08	4X	-	120VAC	5	GPM	E13-G		TF-6
I04	E21	M04	FSH	372		Flow Switch	Vane	16940-2.08	4X	1/2"	120VAC	10	GPM	E13-G		TF-6
I03	E22	M02	FTR	200		Filter	-	13224	4X	-	-	-	-	Per Mnfr		TF-6
I04	E21	M03	LIT	351		Level Indicating Xmtr	Gauge	16940-2.05	4X	-	24Vdc	0-18	FT	E13-E		TF-14
I05	E30C	M05	LIT	451		Level Indicating Xmtr	Scale	11380	4X	-	24Vdc	0-50	INCH	M05		TF-14
I06	E30C	M05	LIT	453		Level Indicating Xmtr	Scale	11380	4X	-	24Vdc	0-20	INCH	M05		TF-14
I07	E30C	M05	LIT	455		Level Indicating Xmtr	Scale	11380	4X	-	24Vdc	0-35	INCH	M05		TF-14
I05	E30C	-	LSH	452		Level Switch	Flood	16940-2.04.B	4X	-	24Vdc	2	INCH	E13-H		TF-6
I06	E30C	-	LSH	454		Level Switch	Flood	16940-2.04.B	4X	-	24Vdc	2	INCH	E13-H		TF-6
I07	E30C	-	LSH	456		Level Switch	Flood	16940-2.04.B	4X	-	24Vdc	2	INCH	E13-H		TF-6
I04	E30C	-	LSHH	351		Level Switch	Float	16940-2.04.A	4X	-	24Vdc	14	FT	E13-D		TF-6
I02	E21	-	LT	151		Level Transmitter	Sub	16940-2.03	6P	-	24Vdc	0-250	FT	E12-H	250 FEET	TF-13
I02	-	M08	PI	111		Pressure Indicator	Gauge	11000	-	-	-	0-160	PSI	M06-34		-
I04	-	M01	PI	301	A	Pressure Indicator	Gauge	11000	-	-	-	0-160	PSI	M06-34		-
I04	-	M01	PI	301	B	Pressure Indicator	Gauge	11000	-	-	-	0-200	PSI	M06-34		-
I05	-	M05	PI	411		Pressure Indicator	Gauge	11386	-	-	-	0-160	PSI	M05-1		-
I05	-	M05	PI	412		Pressure Indicator	Gauge	11386	-	-	-	0-160	PSI	M05-1		-
I06	-	M05	PI	421		Pressure Indicator	Gauge	11386	-	-	-	0-160	PSI	M05-1		-
I06	-	M05	PI	422		Pressure Indicator	Gauge	11386	-	-	-	0-160	PSI	M05-1		-
I07	-	M05	PI	431		Pressure Indicator	Gauge	11386	-	-	-	0-160	PSI	M05-1		-
I07	-	M05	PI	432		Pressure Indicator	Gauge	11386	-	-	-	0-160	PSI	M05-1		-
I02	E21	M08	PIT	161		Pressure Indicating Xmtr	Gauge	16940-2.05	4X	-	24Vdc	0-160	PSI	E13-C		TF-14
I03	E22	M02	PIT	263		Pressure Indicating Xmtr	Gauge	16940-2.05	4X	-	24Vdc	0-130	PSI	E13-C		TF-14
I04	E30C	M01	PNL	341		Control Panel	Gauge	11475	12	-	480 Vac	-	-	Skid		TF-7
I04	E30C	M05	PSH	301		Pressure Switch	Gauge	16940-2.06.A	4X	-	-	130	PSI	E13-C		TF-7
I05	E30C	M05	PSH	411		Pressure Switch	Gauge	16940-2.06.A	4X	-	-	100	PSI	E13-C		TF-7

16940 INSTRUMENTATION DEVICE INDEX

P&ID DWG	E DWG	M DWG	TAG	NO.		DESCRIPTION	TYPE	SPECS	MINIMUM NEMA RATING	SIZE	VOLT	SP / RANGE	UNITS	DWG REF DET MOUNTING	NOTES AND ACCESSORIES	16010 TEST FORM
I05	E30C	M05	PSH	412		Pressure Switch	Gauge	16940-2.06.A	4X	-	-	100	PSI	E13-C		TF-7
I06	E30C	M05	PSH	421		Pressure Switch	Gauge	16940-2.06.A	4X	-	-	100	PSI	E13-C		TF-7
I06	E30C	M05	PSH	422		Pressure Switch	Gauge	16940-2.06.A	4X	-	-	100	PSI	E13-C		TF-7
I07	E30C	M05	PSH	431		Pressure Switch	Gauge	16940-2.06.A	4X	-	-	100	PSI	E13-C		TF-7
I07	E30C	M05	PSH	432		Pressure Switch	Gauge	16940-2.06.A	4X	-	-	100	PSI	E13-C		TF-7
I02	E21	-	PSHH	161		Pressure Switch	Gauge	16940-2.06.A	4X	-	-	100	PSI	E13-C		TF-7
I04	-	-	PSL	361		Pressure Switch	Gauge	11475	4X	-	-	-	-	Per Mnfr		TF-7
I02	E30A	-	SS	192	A~D	Smoke Detector	N.C.	16940-2.10	12	-	24Vdc	-	-	Ceiling		TF-7
I02	E21	-	SV	112		Solenoid Valve	N.C.	15110	4X	-	120 Vac	-	-	Valve		TF-7
I02	-	-	TSH	111		Temperature Switch	N.C.	Div 11	-	-	120Vac	-	-	Motor		TF-7
I04	-	-	TSH	301		Temperature Switch	N.C.	Div 11	-	-	120Vac	-	-	Motor		TF-7
I02	E21	-	ZS	112		Position Switch	N.C.	15110	4X	-	120 Vac	-	-	Valve		TF-7
I02	E30A	-	ZS	191	A,C	Position Switch	N.C.	16940-2.09,A	12	-	24Vdc	-	-	Door		TF-7
I02	E30A	-	ZS	191	B	Position Switch	N.C.	16940-2.09.B	12	-	24Vdc	-	-	Roll-up Door		TF-7
I02	E21	-	ZS	191	D~G	Position Switch	N.C.	16940-2.09.C	12	-	24Vdc	-	-	Fence		TF-7

END OF SECTION

ATTACHMENT 3

CITY OF MILPITAS
ENGINEERING DIVISION
BID SUMMARY

Project Name: McCandless Well Facility
Project No.: 7076
Bid Date: 3/11/2025

		Apparent Low Bidder		
DESCRIPTION	**Engineer's Estimate**	**GSW Construction Inc**	**TSI Enginering Inc**	**Pacific Infrastructure**
Mobilization/Demobilization (5% Max)	$250,000.00	$254,900.00	$210,400.00	$200,000.00
Sheeting, Shoring and Bracing	$5,000.00	$19,900.00	$11,000.00	$5,000.00
Water Pollution Control Work	$29,000.00	$27,900.00	$18,000.00	$20,000.00
Underground Piping and Structures	$262,000.00	$187,000.00	$220,000.00	$400,000.00
Concrete Pads and Foundations	$310,000.00	$368,000.00	$170,000.00	$785,000.00
Masonry Building	$500,000.00	$627,000.00	$752,600.00	$1,073,000.00
Welded Steel Tank	$605,000.00	$597,000.00	$749,000.00	$790,000.00
Mechanical Equipment	$1,132,000.00	$1,296,000.00	$1,534,700.00	$700,000.00
Cathodic Protection	$93,000.00	$72,800.00	$32,000.00	$60,000.00
Electrical & Instrumentation	$1,560,000.00	$1,394,000.00	$1,527,900.00	$1,628,000.00
Equipment and System Testing	$32,000.00	$128,000.00	$27,000.00	$10,000.00
Paving and Overall Site Work	$340,000.00	$364,000.00	$438,186.00	$515,000.00
BASE CONTRACT WORK	**$5,118,000.00**	**$5,336,500.00**	**$5,690,786.00**	**$6,186,000.00**

List of Sub-Contractors			
Description	**GSW Engineering Inc**	**TSI Engineering Inc**	**Pacific Infrastructure**
Electrical	SD Electrical	Brady Electric	Blocka
Well Pump	Pump Man	Bartley Pump PM LLC dba Pumpan Norcal	Pump Man
Welded Tank	Paso Robles Tank	Paso Robles Tank	Paso Robles Tank
Chain Link Fence	Bailey Fenco Co	AAA Fence Company Inc	AAA Fence
Masonry work	Townsend and Schmidt	Roch & Bloch masonary inc	DL Masonry
HVAC / Roof / Metal Decking	James Long Construction Services, Inc	James LongConstruction Services inc	Kings Roofing
Coating / Painting	Redwood Painting	Certified Coatings Company	Redwood Painting
Rebar	C&N Reinforcing		
Plumbing	Mid Coast Plumbing		
Asphalt		American Asphalt Repair and Resurfacing Company Inc	
Grading Paving			Ransome Co

Attachment 4

Construction Change Order Policy for the McCandless Well Facility Project No. 7076

2021 City Council Approved Construction Change Order Policy

Construction Award Award Amount	**Individual Administrative Change Order Authority**	**Cumulative Change Order Authority**
Less than $100,000	$10,000	$15,000
Over $100,000	10% of Award or $20,000 whichever is less	15% of Award or $40,000 whichever is smaller

McCandless Well Facility Project No. 7076 Change Order Policy

Construction Award Award Amount	**Individual Administrative Change Order Authority**	**Cumulative Change Order Authority**
$5,336,500	N/A	$800,000

CITY OF MILPITAS
AGENDA REPORT
(AR)

Item Title:	**Approve Personnel Realignment to Meet Department Operations (Staff Contact: Christian Di Renzo, Public Works Director, 408-586-2602)**
Category:	Consent Calendar-Community Services and Sustainable Infrastructure
Meeting Date:	4/15/2025
Recommendation:	(1) Approve the deletion of a vacant Principal Engineer position and the addition of a Public Works Division Manager – Engineering position in the Utility Engineering Division of Public Works; and (2) Approve the deletion of a vacant Senior Public Works Lead position and the addition of a Maintenance Supervisor position in the Utility Maintenance division of Public Works.

BACKGROUND:

On December 12, 2023, the City Council adopted a resolution to amend the City of Milpitas' Classification Plan to establish the classifications of City Engineer and Public Works Division Manager, and realign the Engineering and Public Works Departments. This change supports staff retention and long-term succession planning. Assigning a Public Works Division Manager to oversee each section promotes consistency across the Public Works Department, streamlines internal processes, and enhances efficiency among the sections. Additionally, the Department recognizes the need to improve front-line supervision of our operations to better support our staff and continue to deliver quality services to the community.

ANALYSIS:

The Utility Engineering Section provides technical engineer and regulatory support for the City water, sanitary sewer, and stormwater collection systems. This section is currently budgeted for (6) six full-time staff members: (1) Principal Civil Engineer, (2) Associate Civil Engineers, (1) Assistant Engineer, (1) Engineering Aide, and (1) Cross Connection Specialist and (1) part-time student intern. There are (2) two vacancies: (1) Principal Civil Engineer and (1) an Associate Civil Engineer which is currently undergoing recruitment and expected to be filled soon.

To provide the City the opportunity to hire and retain the most qualified applicant to oversee the engineering and capital responsibilities for our utility systems, staff is requesting to reallocate the funding from the vacant Principal Civil Engineer to approve and fund a Public Works Division Manager – Engineering. This request aligns with the recent reorganization of the Public Works Department approved at the December 12, 2023, council meeting. The proposed structure reflects the volume of work and scope of responsibilities.

The Water Section of the Utility Maintenance Division is responsible for the operations and maintenance of the City drinking water system, adhering to stringent State regulations for the protection of water quality and public health. The section is currently budgeted for 13 full-time staff members, including (1) Senior Public Works Lead, (3) Water System Operators, (1) Assistant Water System Operator, (3) Maintenance Worker III, and (5) Maintenance Worker I/II. The Senior Public Works Lead position has been vacant since October 31, 2024. A recruitment effort in Fall 2024 received 3 applications, but no candidate met the minimum qualifications.

The Department proposes to delete the vacant Senior Public Works Lead position in the Water Section and add a Maintenance Supervisor position. The Senior Public Works Lead classification does not include important supervisory responsibilities such as front-line performance management oversight. The Maintenance Supervisor classification is an established classification that has not been used in the City for over a decade. This classification includes full supervisory responsibilities, such as staff performance management, section work planning and scheduling, development and implementation of Standard Operating Procedures, and training for the Water System Maintenance section of the Utility Maintenance Division. The Maintenance Supervisor position would provide frontline supervision over the section's 12 positions, enhancing overall

section management and performance. This establishes a clear and manageable supervisory span of control and will relieve the Division Manager from day-to-day oversight of the operation including front-line performance supervision, therefore allowing the Division Manager to prioritize holistic system improvements and organizational efficiencies.

The Public Works Division Manager – Utilities has assumed the majority of the day-to-day operational roles and responsibilities of the Senior Public Works Lead vacancy, significantly impacting workload. The Department sees an opportunity to realign the position to better recruit and support the functions of the Water Section. Municipal agencies have historically been unable to effectively compete for talent against special water (or sewer) districts at all levels of an organization from General Manager to entry-level operators. The current vacancy affords an opportunity to update and expand the duties to include front-line supervision and bridge the salary disparity. Management is hopeful to be able to attract either an experienced supervisor or a qualified crew leader that is looking to advance their career into middle-management. One of the position's requisites is the possession of a D5 water operator certification which is the highest grade obtainable.

The proposed staffing realignment would result in the following staffing structure in each of the impacted functions:

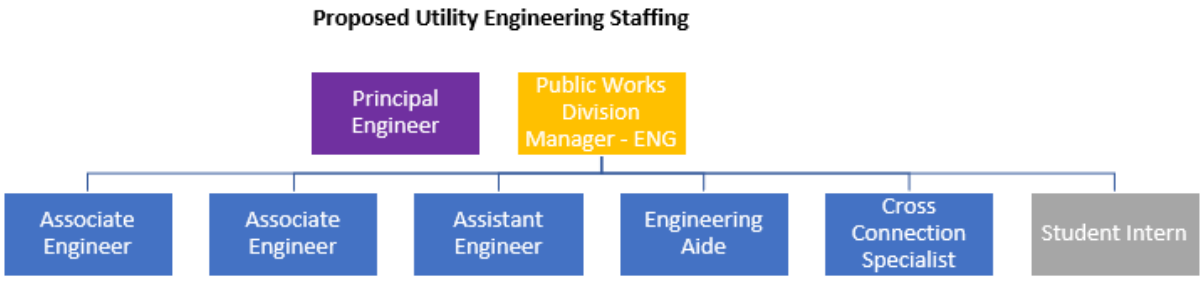

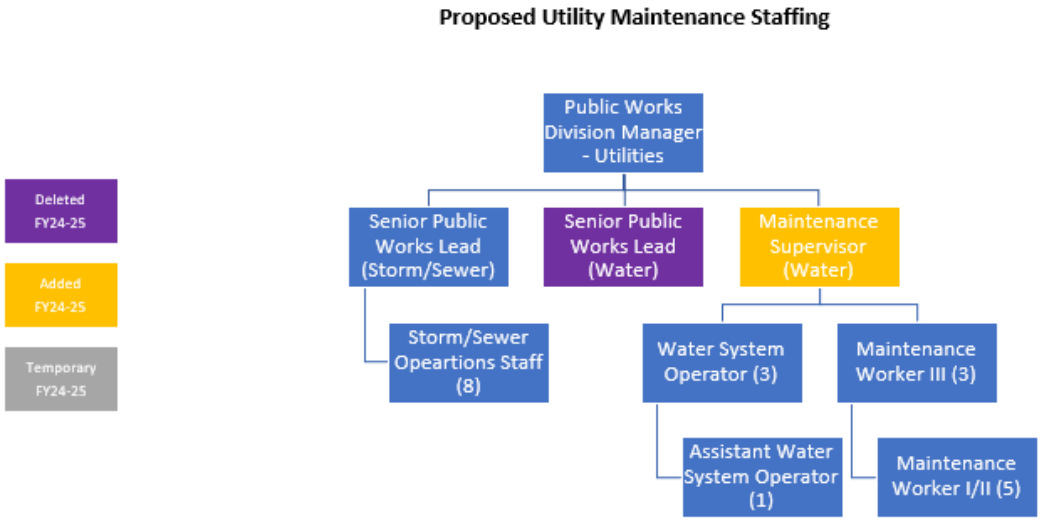

POLICY ALTERNATIVE(S):

Alternative 1: Do not approve Public Works personnel realignment recommendations.

Pros: None.

Cons: If the conversion of positions is not approved in the Utility Engineering and Utility Maintenance functions, the Public Works Department will continue to experience difficulty in filling these positions with qualified candidates. The request to upgrade the Principal Engineer position to Public Works Division Manager – Engineering, and upgrade the Senior Public Works Lead to Maintenance Supervisor will better align with the current structure of the Department, offers the appropriate level of management and supervision, and supports employee retention.

Reason for Not Recommending: If the proposed personnel realignment recommendations are not approved, the Public Works Department will not be able to expand the scope of work assignments or create operational efficiencies.

FISCAL IMPACT:

The fiscal impact for all job classifications recommended is minimal for the remaining FY 2025-26 year given the fact the salary savings due to current vacancies will most likely offset any incremental costs that will be realized by the time positions are filled.

FY 2024-2025 Impact (May + June)

	Salary	Benefits	Total	Water Fund	Sewer Fund
Senior Public Works Lead	$ 22,661	$ 12,390	$ 35,050	$ 35,050	
Maintenance Supervisor	$ 25,814	$ 15,586	$ 41,400	$ 41,400	
		Delta	*$ 6,350*	*$ 6,350*	
Principal Engineer	$ 28,127	$ 16,445	$ 44,573	$ 22,286	$ 22,286
Public Works Division Manager - Eng	$ 31,666	$ 17,737	$ 49,403	$ 24,702	$ 24,702
		Delta	*$ 4,830*	*$ 2,415*	*$ 2,415*
		Total	**$ 11,180**	**$ 8,765**	**$ 2,415**

FY 2025-2026 Impact

	Salary	Benefits	Total	Water Fund	Sewer Fund
Senior Public Works Lead	$135,963	$ 74,339	$210,302	$ 210,302	
Maintenance Supervisor	$154,884	$ 93,518	$248,402	$ 248,402	
		Delta	*$ 38,100*	*$ 38,100*	
Principal Engineer	$168,765	$ 98,672	$267,437	$ 133,718	$ 133,718
Public Works Division Manager - Eng	$189,996	$106,422	$296,418	$ 148,209	$ 148,209
		Delta	*$ 28,982*	*$ 14,491*	*$ 14,491*
		Total	**$ 67,082**	**$ 52,591**	**$ 14,491**

Recurring costs will be a net increase of $67,082, which will be factored into the FY2025-2026 Proposed Operating Budget. Specifically, the approximate annual recurring impacts in FY 2025-26 are as follows:

- $28,982, net increase for conversion of Principal Civil Engineer to Public Works Division Manager – Engineering
- $38,100, net increase for conversion of Senior Public Works Lead to Maintenance Supervisor

The net increase for converting the Principal Civil Engineer position to Public Works Division Manager – Engineering will have no impact on the General Fund, as staff hours will be mainly allocated to private developer job codes (PJs) and Capital Improvement Projects; otherwise, the position is equally funded between the Water and Sewer Funds. While private development activity is difficult to forecast, the position plays a vital role in reviewing plans for conformity and projected demand needs with respect to water and sewer impacts as a result of development. Costs borne in reviewing plan submittals are charged to the respective developer through specific PJ accounts established any time a development is proposed in order to recover staff time incurred from all departments that partake in the review cycle. Similarly, should this role play

a critical project management function with respect to any of the utilities' capital projects, staff time would be charged directly to the respective capital project as administrative overhead.

The Water Enterprise Fund has an operating and maintenance budget of approximately $36 million, 71% of which is accounted by the water supply contracts with San Francisco Public Utility Commission (SFPUC) and Valley Water in the amount of $26 million. All labor costs for the Utility Engineering Section, where this position resides, account for just 7% of the total operating budget for the utility. The anticipated marginal personnel increases will have a de minimis impact to either of the enterprise budgets. The utility rate increases that were approved two years ago were driven primarily by just two sources: projected contractual increases from the purchase of wholesale water and, on the sewer side, San José's projected Capital Improvement Program (CIP) of which the City funds 6.2%, and the City's own CIP schedule following the adoption of the water and sewer master plans in the summer of 2022. Personnel costs, and all other operating expenditure line items were projected to incur a 4% inflationary increase per year. Additionally, the Maintenance Supervisor position is funded entirely by the Water Fund.

CALIFORNIA ENVIRONMENTAL QUALITY ACT (CEQA):
By the definition provided in the CEQA Guidelines Section 15378, this action does not qualify as a "project" for the purpose of CEQA as this action has no potential to result in either a direct physical change in the environment, or a reasonably foreseeable indirect physical change in the environment.

RECOMMENDATION:
1) Approve the deletion of a vacant Principal Engineer position and the addition of to a Public Works Division Manager – Engineering position in the Utility Engineering Division of Public Works; and
2) Approve the deletion of a vacant Senior Public Works Lead position and the addition of a Maintenance Supervisor position in the Utility Maintenance division of Public Works.

ATTACHMENT(S):
a) Resolution

RESOLUTION NO. XXXX

A RESOLUTION OF THE CITY COUNCIL OF THE CITY OF MILPITAS AMENDING RESOLUTION NO. 1626, THE CLASSIFICATION PLAN, TO APPROVE AND ADOPT THE CLASSIFICATIONS PAY SCHEDULES, AND AMEND BUDGETED ALLOCATED POSITIONS

WHEREAS, the City of Milpitas has a Classification Plan adopted as Resolution No. 1626 on December 17, 1968, which has been amended from time to time, and which is in accordance with the Personnel Rules and Regulations of the City of Milpitas (Resolution No. 792 as amended); and

WHEREAS, amendments to the Classification Plan are necessary to account for changes within the organization, transfer of duties, new job responsibilities, and adjustments to salary ranges; and

WHEREAS, the City is required to publish publicly available approved and adopted pay schedule(s) for all positions within the Classification Plan pursuant to the California Code of Regulations, 2 CCR §570.5.

NOW, THEREFORE, the City Council of the City of Milpitas hereby finds, determines, and resolves as follows:

1. The City Council has considered the full record before it, which may include but is not limited to such things as the staff report, testimony by staff and the public, and other materials and evidence submitted or provided to it. Furthermore, the recitals set forth above are found to be true and correct and are incorporated herein by reference.

2. Resolution No. 1626, as amended, is hereby further amended effective April 15, 2025 as set forth below.

   A. **AUTHORIZE THE FOLLOWING POSITIONS:**
   Add One (1) FTE Public Works Division Manager - Engineering
   Add One (1) FTE Maintenance Supervisor

   B. **DELETE THE FOLLOWING BUDGETED ALLOCATED POSITIONS:**
   Delete One (1) Principal Engineer
   Delete One (1) Public Works Senior Lead

   C. **APPROVE THE SALARY RANGE FOR THE FOLLOWING CLASSIFICATION:**

Title	**Annual Salary Range:**
Maintenance Supervisor	$135,746.00 - $165,000.00

   D. **APPROVE AND ADOPT THE PAY SCHEDULE "All Job Classifications/Salary Table" EFFECTIVE APRIL 15, 2025.**

   E. **APPROVE AND ADOPT THE MID-CON BENEFITS MATRIX TO CAPTURE THE CLASSIFICATION CHANGES FROM ITEMS A, B, AND C ABOVE EFFECTIVE April 15, 2025.**

PASSED AND ADOPTED this ____ day of April 2025 the following vote:

AYES:

NOES:

ABSENT:

ABSTAIN:

ATTEST:

_____
Suzanne Guzzetta, City Clerk

APPROVED:

_____
Carmen Montano, Mayor

APPROVED AS TO FORM:

_____
Christopher Creech, Acting City Attorney

				Step A			Step B			Step C			Step D			Step E		
Classification	Union Code	Occ Code	Pay Grade	Hourly	BiWeekly	Annual	Hourly2	BiWeekly3	Annual4	Hourly5	BiWeekly6	Annual7	Hourly8	BiWeekly9	Annual10	Hourly11	BiWeekly12	Annual13
Accountant	50	2101	500	51.81	4,144.60	107,759.60	54.40	4,351.80	113,146.80	57.11	4,568.50	118,781.00	59.98	4,798.00	124,748.00	62.96	5,037.03	130,962.78
Accounting Technician I	50	6104	513	33.74	2,699.17	70,178.42	35.43	2,834.16	73,688.16	37.20	2,975.87	77,372.62	39.06	3,124.66	81,241.16	41.01	3,280.90	85,303.40
Accounting Technician II	50	6105	514	37.11	2,969.08	77,196.08	38.97	3,117.58	81,057.08	40.92	3,273.45	85,109.70	42.96	3,437.16	89,366.16	45.11	3,608.94	93,832.44
Administrative Analyst I	80	2102	801	43.28	3,462.67	90,029.42										56.98	4,558.39	118,518.14
Administrative Analyst II	80	2103	802	47.80	3,824.11	99,426.86										62.92	5,033.41	130,868.66
Administrative Assistant	80	6111	828	41.29	3,303.48	85,890.48	43.36	3,468.65	90,184.90	45.53	3,642.10	94,694.60	47.80	3,824.18	99,428.68	50.19	4,015.38	104,399.88
Assistant Chief of Police	60	1405	649	116.80	9,344.14	242,947.64										163.52	13,081.79	340,126.54
Assistant City Attorney	60	1113	645	80.82	6,465.24	168,096.24										109.40	8,751.75	227,545.50
Assistant City Manager	60	1104	666	101.41	8,112.63	210,928.38										141.97	11,357.69	295,299.94
Assistant Dir Recr & Comm Svcs	60	1121	659	69.20	5,535.95	143,934.70										96.88	7,750.33	201,508.58
Assistant Engineer	50	2201	502	56.13	4,490.60	116,755.60	58.94	4,715.12	122,593.12	61.89	4,950.86	128,722.36	64.98	5,198.44	135,159.44	68.23	5,458.39	141,918.14
Assistant Finance Director	60	1109	669	72.98	5,838.26	151,794.76										102.17	8,173.76	212,517.76
Assistant Fire Marshal	60	2501	632	81.30	6,503.96	169,102.96										113.82	9,105.56	236,744.56
Assistant Planner	50	2801	503	53.82	4,305.89	111,953.14	56.52	4,521.30	117,553.80	59.33	4,746.55	123,410.30	62.30	4,983.82	129,579.32	65.41	5,233.11	136,060.86
Assistant Pool Manager	70	5609	709	22.16	1,772.80	46,092.80										28.55	2,284.00	59,384.00
Assistant Water Operator	20	7212	221	46.16	3,462.27	90,019.02	48.47	3,635.40	94,520.40	50.90	3,817.16	99,246.16	53.44	4,008.00	104,208.00	56.11	4,208.43	109,419.18
Assistant Water Operator - 40	20	8611	226	46.43	3,714.73	96,582.98	48.76	3,900.66	101,417.16	51.20	4,095.86	106,492.36	53.77	4,301.48	111,838.48	56.46	4,516.46	117,427.96
Associate Civil Engineer	50	2202	504	64.55	5,164.16	134,268.16	67.78	5,422.40	140,982.40	71.17	5,693.53	148,031.78	74.73	5,978.21	155,433.46	78.46	6,277.14	163,205.64
Associate Planner	50	2802	505	61.89	4,950.99	128,725.74	64.99	5,199.21	135,179.46	68.24	5,459.44	141,945.44	71.65	5,731.70	149,024.20	75.23	6,018.18	156,472.68
Budget Manager	80	1115	839	63.09	5,047.51	131,235.26										83.05	6,643.99	172,743.74
Building & Housing Director	60	1802	658	88.20	7,055.63	183,446.38										123.47	9,877.89	256,825.14
Building Inspection Manager	80	3809	848	65.73	5,258.33	136,716.58										79.89	6,391.58	166,181.08
Building Inspector Apprentice	70	8610	770	28.00	2,240.00	58,240.00										35.00	2,800.00	72,800.00
Building Official	60	1804	676	77.58	6,206.24	161,362.24										108.61	8,688.74	225,907.24
Building Permit Technician	50	5801	508	41.10	3,288.12	85,491.12	43.16	3,452.88	89,774.88	45.33	3,626.11	94,278.86	47.58	3,806.73	98,974.98	49.96	3,996.87	103,918.62
Building/NP Inspector	50	3801	507	54.48	4,358.21	113,313.46	57.20	4,576.17	118,980.42	60.06	4,804.93	124,928.18	63.07	5,045.20	131,175.20	66.22	5,297.43	137,733.18
Business Systems Analyst/Dev	80	2119	853	57.70	4,615.99	120,015.74										75.95	6,076.05	157,977.30
Buyer	80	2106	803	42.89	3,431.28	89,213.28										56.46	4,516.63	117,432.38
CIP Manager	60	2211	642	67.02	5,361.33	139,394.58										93.83	7,506.45	195,167.70
Case Manager	50	5612	544	36.83	2,946.17	76,600.42										45.96	3,676.76	95,595.76
Chief Fire Enforcement Officer	60	1505	656	70.29	5,623.59	146,213.34										98.41	7,873.03	204,698.78
Chief of Police	60	1402	650	122.64	9,811.05	255,087.30										171.69	13,735.51	357,123.26
City Attorney	60	1112	644	99.96	7,997.00	207,922.00										124.95	9,996.27	259,903.02
City Clerk	60	1101	605	67.06	5,364.87	139,486.62										93.90	7,511.67	195,303.42
City Engineer	60	1201	606	78.23	6,258.32	162,716.32										109.52	8,761.65	227,802.90
City Manager	60	1102	697	138.16	11,052.69	287,369.94										138.16	11,052.69	287,369.94
Code Enforcement Officer	50	5804	515	47.63	3,810.70	99,078.20	50.02	4,001.29	104,033.54	52.53	4,202.20	109,257.20	55.15	4,412.30	114,719.80	57.91	4,632.76	120,451.76
Communications Dispatch Superv	40	6409	456	61.94	4,954.90	128,827.40	65.03	5,202.64	135,268.64	68.28	5,462.79	142,032.54	71.70	5,735.94	149,134.44	75.28	6,022.74	156,591.24
Communications Dispatcher	40	6408	455	53.63	4,290.14	111,543.64	56.31	4,504.62	117,120.12	59.12	4,729.84	122,975.84	62.08	4,966.29	129,123.54	65.18	5,214.61	135,579.86
Community Service Officer	40	6412	460	46.22	3,697.73	96,140.98	48.53	3,882.63	100,948.38	50.96	4,076.76	105,995.76	53.51	4,280.59	111,295.34	56.18	4,494.64	116,860.64
Councilmember	60	1107	699	20.87	417.40	10,852.40										20.87	417.40	10,852.40
Crime Analyst	80	2105	809	51.81	4,145.13	107,773.38										68.20	5,456.27	141,863.02
Cross Connection Specialist	20	8626	239	47.99	3,839.31	99,822.06	50.52	4,041.37	105,075.62	53.18	4,254.08	110,606.08	55.97	4,477.97	116,427.22	58.92	4,713.65	122,554.90
Customer Services Supervisor	80	2127	847	50.24	4,019.43	104,505.18										66.13	5,290.45	137,551.70
Deputy City Attorney	60	1114	646	63.14	5,050.96	131,324.96										87.52	7,001.35	182,035.10
Deputy City Clerk	80	6102	835	49.34	3,947.07	102,623.82										59.97	4,797.68	124,739.68
Deputy City Manager	60	1119	672	99.38	7,950.37	206,709.62										139.07	11,125.91	289,273.66
Deputy Director of IT	60	1123	679	80.31	6,424.82	167,045.32										102.85	8,227.82	213,923.32
Deputy Fire Chief	60	1504	633	102.44	8,195.58	213,085.08										143.42	11,473.81	298,319.06
Deputy Public Works Director	60	1207	654	78.23	6,258.32	162,716.32										109.52	8,761.65	227,802.90
Digital Media Specialist	80	2121	840	44.63	3,570.76	92,839.76										58.75	4,700.21	122,205.46
Dir of Recr & Community Svcs	60	1208	655	86.37	6,909.53	179,647.78										121.15	9,692.19	251,996.94
Econ Dev Dir & Strat Init	60	1206	653	86.37	6,909.53	179,647.78										121.15	9,692.19	251,996.94
Economic Development Coord	80	8623	852	54.45	4,355.63	113,246.38										67.51	5,400.93	140,424.18
Economic Development Spec	80	8606	850	51.85	4,147.86	107,844.36										62.59	5,006.89	130,179.14
Electrical/Building Inspector	50	3802	511	57.20	4,576.16	118,980.16	60.06	4,804.93	124,928.18	63.06	5,045.19	131,174.94	66.22	5,297.43	137,733.18	69.53	5,562.32	144,620.32
Emergency Services Coordinator	80	2502	836	57.28	4,582.72	119,150.72										75.39	6,031.47	156,818.22
Engineering Aide	50	3201	512	44.64	3,571.17	92,850.42	46.87	3,749.74	97,493.24	49.22	3,937.21	102,367.46	51.68	4,134.05	107,485.30	54.26	4,340.75	112,859.50
Engineering Permit Technician	50	2210	540	40.18	3,214.68	83,581.68	42.19	3,375.42	87,760.92	44.30	3,544.17	92,148.42	46.52	3,721.34	96,754.84	48.84	3,907.44	101,593.44
Entry Firefighter/EMT - 40	10	4512	115	55.58	4,446.26	115,602.76	58.36	4,668.58	121,383.08									
Entry Firefighter/EMT - 56	10	4510	112	39.70	4,446.26	115,602.76	41.68	4,668.58	121,383.08									
Entry Firefighter/Paramedic-40	10	4513	116	62.25	4,979.82	129,475.32	65.36	5,228.81	135,949.06									
Entry Firefighter/Paramedic-56	10	4511	113	44.46	4,979.82	129,475.32	46.69	5,228.81	135,949.06									
Entry Level Fire Inspector	10	3508	114	47.99	3,839.55	99,828.30	50.39	4,031.53	104,819.78	52.91	4,233.11	110,060.86	55.56	4,444.77	115,564.02	58.34	4,667.01	121,342.26
Envir & Regulatory Comply Spec	80	8624	851	55.34	4,426.88	115,098.88										72.84	5,827.05	151,503.30
Environmental Inspector	50	2213	553	57.20	4,576.16	118,980.16	60.06	4,804.96	124,928.96	63.07	5,045.21	131,175.46	66.22	5,297.46	137,733.96	69.53	5,562.32	144,620.32
Equip Maint Worker I - 40	20	8612	227	42.23	3,378.26	87,834.76	44.32	3,545.47	92,182.22	46.54	3,723.07	96,799.82	48.87	3,909.97	101,659.22	51.32	4,105.21	106,735.46
Equip Maint Worker II - 40	20	8613	228	46.43	3,714.73	96,582.98	48.76	3,900.66	101,417.16	51.20	4,095.86	106,492.36	53.77	4,301.48	111,838.48	56.46	4,516.46	117,427.96
Equip Maint Worker III - 40	20	8614	229	52.31	4,185.18	108,814.68	54.94	4,394.96	114,268.96	57.69	4,615.14	119,993.64	60.57	4,845.68	125,987.68	63.61	5,088.69	132,305.94
Equipment Maint. Worker I	20	7202	200	41.97	3,147.51	81,835.26	44.07	3,304.89	85,927.14	46.27	3,470.18	90,224.68	48.58	3,643.67	94,735.42	51.01	3,825.85	99,472.10

				Step A			Step B			Step C			Step D			Step E		
Classification	Union Code	Occ Code	Pay Grade	Hourly	BiWeekly	Annual	Hourly2	BiWeekly3	Annual4	Hourly5	BiWeekly6	Annual7	Hourly8	BiWeekly9	Annual10	Hourly11	BiWeekly12	Annual13
Equipment Maint. Worker II	20	7203	201	46.16	3,462.27	90,019.02	48.47	3,635.40	94,520.40	50.90	3,817.16	99,246.16	53.44	4,008.00	104,208.00	56.11	4,208.43	109,419.18
Equipment Maint. Worker III	20	7204	202	52.01	3,901.05	101,427.30	54.61	4,096.03	106,496.78	57.34	4,300.87	111,822.62	60.21	4,515.91	117,413.66	63.22	4,741.72	123,284.72
Executive Assistant	80	6117	812	45.42	3,633.30	94,465.80	47.69	3,815.00	99,190.00	50.07	4,005.74	104,149.24	52.58	4,206.02	109,356.52	55.20	4,416.32	114,824.32
FF/Paramedic Trainee - 40	10	4504	107	59.28	4,742.68	123,309.68	59.28	4,742.68	123,309.68	59.28	4,742.68	123,309.68	59.28	4,742.68	123,309.68	59.28	4,742.68	123,309.68
FF/Paramedic Trainee - 56	10	4514	155	42.35	4,742.68	123,309.68	42.35	4,742.68	123,309.68	42.35	4,742.68	123,309.68	42.35	4,742.68	123,309.68	42.35	4,742.68	123,309.68
Finance Director	60	1103	627	88.58	7,086.27	184,243.02										124.00	9,919.98	257,919.48
Finance Manager	60	1116	647	62.51	5,001.18	130,030.68										87.52	7,001.68	182,043.68
Financial Analyst I	80	2125	844	40.41	3,233.17	84,062.42										53.20	4,255.81	110,651.06
Financial Analyst II	80	2126	845	44.63	3,570.76	92,839.76										58.75	4,700.21	122,205.46
Fire Battalion Chief	10	2508	153	59.47	6,660.85	173,182.10										83.26	9,325.19	242,454.94
Fire Battalion Chief - 40	10	2509	154	83.26	6,660.85	173,182.10										116.56	9,325.19	242,454.94
Fire Captain	10	2504	100	52.05	5,829.39	151,564.14	54.65	6,120.86	159,142.36	57.38	6,426.91	167,099.66	60.25	6,748.27	175,455.02	63.27	7,085.69	184,227.94
Fire Captain - 40	10	2507	108	72.87	5,829.39	151,564.14	76.51	6,120.86	159,142.36	80.34	6,426.91	167,099.66	84.35	6,748.27	175,455.02	88.57	7,085.69	184,227.94
Fire Chief	60	1502	630	112.95	9,035.72	234,928.72										158.13	12,650.04	328,901.04
Fire Engineer/EMT	10	4501	102	45.90	5,140.36	133,649.36	48.19	5,397.39	140,332.14	50.60	5,667.26	147,348.76	53.13	5,950.63	154,716.38	55.79	6,248.16	162,452.16
Fire Engineer/EMT - 40	10	4515	156	64.25	5,140.36	133,649.36	67.47	5,397.39	140,332.14	70.84	5,667.26	147,348.76	74.38	5,950.63	154,716.38	78.10	6,248.16	162,452.16
Fire Engineer/Paramedic	10	4505	151	51.40	5,757.22	149,687.72	53.97	6,045.09	157,172.34	56.67	6,347.34	165,030.84	59.51	6,664.72	173,282.72	62.48	6,997.96	181,946.96
Fire Prevention Inspector	10	3501	106	73.58	5,886.25	153,042.50	77.26	6,180.57	160,694.82	81.12	6,489.61	168,729.86	85.18	6,814.09	177,166.34	89.44	7,154.80	186,024.80
Fire Protection Engineer	10	3507	110	73.58	5,886.25	153,042.50	77.26	6,180.57	160,694.82	81.12	6,489.61	168,729.86	85.18	6,814.09	177,166.34	89.44	7,154.80	186,024.80
Firefighter/EMT	10	4502	103	43.77	4,902.01	127,452.26	45.96	5,147.12	133,825.12	48.25	5,404.48	140,516.48	50.67	5,674.71	147,542.46	53.20	5,958.45	154,919.70
Firefighter/EMT - 40	10	4516	157	61.28	4,902.01	127,452.26	64.34	5,147.12	133,825.12	67.56	5,404.48	140,516.48	70.93	5,674.71	147,542.46	74.48	5,958.45	154,919.70
Firefighter/EMT Trainee - 40	10	4509	109	52.93	4,234.53	110,097.78	52.93	4,234.53	110,097.78	52.93	4,234.53	110,097.78	52.93	4,234.53	110,097.78	52.93	4,234.53	110,097.78
Firefighter/Paramedic	10	4503	104	49.02	5,490.25	142,746.50	51.47	5,764.77	149,884.02	54.04	6,053.01	157,378.26	56.75	6,355.67	165,247.42	59.58	6,673.46	173,509.96
Fitness Instructor	70	5620	713	35.00	2,800.00	72,800.00										75.00	6,000.00	156,000.00
Fleet Maint Worker I -40	20	8615	230	40.31	3,224.94	83,848.44	42.33	3,386.56	88,050.56	44.45	3,555.63	92,446.38	46.66	3,733.18	97,062.68	49.00	3,920.33	101,928.58
Fleet Maint Worker II - 40	20	8616	231	44.34	3,547.12	92,225.12	46.56	3,724.68	96,841.68	48.88	3,910.74	101,679.24	51.33	4,106.40	106,766.40	53.90	4,311.62	112,102.12
Fleet Maint Worker III -40	20	8617	232	51.00	4,079.81	106,075.06	53.55	4,283.98	111,383.48	56.22	4,497.70	116,940.20	59.03	4,722.03	122,772.78	61.99	4,959.14	128,937.64
Fleet Maintenance Worker I	20	7207	213	40.31	3,023.39	78,608.14	42.33	3,174.53	82,537.78	44.44	3,333.28	86,665.28	46.67	3,499.88	90,996.88	49.00	3,674.90	95,547.40
Fleet Maintenance Worker II	20	7208	214	44.34	3,325.74	86,469.24	46.56	3,491.99	90,791.74	48.89	3,666.62	95,332.12	51.33	3,849.97	100,099.22	53.90	4,042.39	105,102.14
Fleet Maintenance Worker III	20	7209	215	50.99	3,824.56	99,438.56	53.54	4,015.77	104,410.02	56.22	4,216.53	109,629.78	59.03	4,427.34	115,110.84	61.98	4,648.79	120,868.54
GIS Technician	50	2212	552	56.13	4,490.60	116,755.60	58.94	4,715.12	122,593.12	61.89	4,950.90	128,723.40	64.98	5,198.42	135,158.92	68.23	5,458.41	141,918.66
Hazardous Materials Inspector	10	3502	105	73.58	5,886.25	153,042.50	77.26	6,180.57	160,694.82	81.12	6,489.61	168,729.86	85.18	6,814.09	177,166.34	89.44	7,154.80	186,024.80
Housing Official	60	1120	673	72.98	5,838.26	151,794.76										102.17	8,173.76	212,517.76
Human Resources Analyst I	80	2124	843	43.28	3,462.67	90,029.42										56.98	4,558.39	118,518.14
Human Resources Analyst II	80	2123	842	47.80	3,824.11	99,426.86										62.92	5,033.41	130,868.66
Human Resources Assistant	80	2108	846	30.83	2,466.62	64,132.12	32.37	2,589.86	67,336.36	33.99	2,719.35	70,703.10	35.69	2,855.34	74,238.84	37.48	2,998.08	77,950.08
Human Resources Director	60	1105	613	88.08	7,046.40	183,206.40										123.31	9,864.99	256,489.74
Human Resources Manager	60	1209	677	67.22	5,377.53	139,815.78										94.11	7,528.53	195,741.78
Human Resources Technician	80	2107	816	37.40	2,991.70	77,784.20	39.27	3,141.93	81,690.18	41.23	3,298.33	85,756.58	43.30	3,463.89	90,061.14	45.46	3,636.63	94,552.38
I T Director	60	2113	624	86.92	6,953.71	180,796.46										121.69	9,735.17	253,114.42
I T Manager	80	2116	819	65.16	5,212.88	135,534.88										85.78	6,862.06	178,413.56
I T Technician	50	3101	542	44.66	3,572.89	92,895.14	46.89	3,751.52	97,539.52	49.24	3,939.05	102,415.30	51.70	4,136.01	107,536.26	54.29	4,342.83	112,913.58
Information Technology Analyst	80	2118	831	54.81	4,385.16	114,014.16										72.15	5,772.16	150,076.16
Junior Engineer	50	2203	519	51.03	4,082.33	106,140.58	53.58	4,286.46	111,447.96	56.26	4,500.79	117,020.54	59.07	4,725.82	122,871.32	62.03	4,962.12	129,015.12
Junior Planner	50	2804	520	46.20	3,696.12	96,099.12	48.51	3,880.95	100,904.70	50.94	4,074.97	105,949.22	53.48	4,278.78	111,248.28	56.16	4,492.67	116,809.42
Legal Assistant	60	1124	689	41.29	3,303.48	85,890.48	43.36	3,468.65	90,184.90	45.53	3,642.10	94,694.60	47.80	3,824.18	99,428.68	50.19	4,015.38	104,399.88
Lifeguard	70	5610	710	17.70	1,416.00	36,816.00										22.88	1,830.40	47,590.40
Maint Worker III - 40	20	8619	234	43.42	3,473.75	90,317.50	45.60	3,647.70	94,840.20	47.87	3,829.97	99,579.22	50.27	4,021.63	104,562.38	52.78	4,222.66	109,789.16
Maintenance Assistant	20	8625	238	26.48	2,118.21	55,073.46	27.73	2,218.58	57,683.08	29.03	2,322.41	60,382.66	30.40	2,432.30	63,239.80	31.83	2,546.52	66,209.52
Maintenance Custodian I	20	8101	203	30.93	2,319.75	60,313.50	32.48	2,435.74	63,329.24	34.10	2,557.55	66,496.30	35.81	2,685.43	69,821.18	37.60	2,819.70	73,312.20
Maintenance Custodian I - 40	20	8107	222	30.93	2,474.42	64,334.92	32.48	2,598.11	67,550.86	34.10	2,728.03	70,928.78	35.81	2,864.45	74,475.70	37.60	3,007.65	78,198.90
Maintenance Custodian II	20	8102	204	34.02	2,551.79	66,346.54	35.72	2,679.34	69,662.84	37.51	2,813.33	73,146.58	39.39	2,953.91	76,801.66	41.36	3,101.65	80,642.90
Maintenance Custodian II - 40	20	8108	223	34.02	2,721.90	70,769.40	35.72	2,857.93	74,306.18	37.51	3,000.87	78,022.62	39.39	3,150.86	81,922.36	41.36	3,308.46	86,019.96
Maintenance Custodian III	20	8103	205	39.13	2,934.49	76,296.74	41.08	3,081.20	80,111.20	43.14	3,235.26	84,116.76	45.29	3,397.04	88,323.04	47.56	3,566.93	92,740.18
Maintenance Custodian III - 40	20	8618	233	39.13	3,130.33	81,388.58	41.08	3,286.61	85,451.86	43.14	3,451.42	89,736.92	45.30	3,623.66	94,215.16	47.56	3,804.42	98,914.92
Maintenance Supervisor	80	6124	858	65.26	5,220.80	135,740.80	68.53	5,482.40	142,542.40	71.95	5,756.00	149,656.00	75.55	6,044.00	157,144.00	79.33	6,346.40	165,006.40
Maintenance Worker I	20	8202	206	34.02	2,551.79	66,346.54	35.72	2,679.34	69,662.84	37.51	2,813.33	73,146.58	39.39	2,953.99	76,803.74	41.36	3,101.65	80,642.90
Maintenance Worker I-40	20	8203	207	34.33	2,746.71	71,414.46	36.04	2,883.16	74,962.16	37.85	3,027.95	78,726.70	39.74	3,178.98	82,653.48	41.73	3,338.35	86,797.10
Maintenance Worker II	20	8204	208	37.43	2,806.93	72,980.18	39.30	2,947.26	76,628.76	41.26	3,094.59	80,459.34	43.32	3,249.35	84,483.10	45.49	3,411.82	88,707.32
Maintenance Worker II-40	20	8205	209	37.76	3,020.65	78,536.90	39.65	3,171.69	82,463.94	41.64	3,331.06	86,607.56	43.71	3,496.66	90,913.16	45.90	3,671.65	95,462.90
Maintenance Worker III	20	8206	210	43.04	3,227.92	83,925.92	45.19	3,389.33	88,122.58	47.45	3,558.80	92,528.80	49.82	3,736.74	97,155.24	52.31	3,923.60	102,013.60
Maintenance Worker/Seasonal	70	8207	760	19.88	1,590.40	41,350.40										24.85	1,988.00	51,688.00
Management Analyst	80	2128	854	57.38	4,590.78	119,360.28										80.36	6,428.51	167,141.26
Marketing Coordinator	50	5614	548	43.37	3,469.45	90,205.70	45.54	3,642.91	94,715.66	47.81	3,825.05	99,451.30	50.20	4,016.30	104,423.80	52.71	4,217.13	109,645.38
Mayor	60	1118	696	26.09	521.88	13,568.88										26.09	521.88	13,568.88
Office Assistant I	50	6108	516	29.34	2,347.19	61,026.94	30.81	2,464.53	64,077.78	32.35	2,587.78	67,282.28	33.96	2,717.13	70,645.38	35.66	2,852.99	74,177.74
Office Assistant II	50	6109	517	32.27	2,581.79	67,126.54	33.89	2,710.83	70,481.58	35.58	2,846.46	74,007.96	37.36	2,988.77	77,708.02	39.23	3,138.15	81,591.90
Office Specialist	50	6110	518	37.11	2,969.04	77,195.04	38.97	3,117.54	81,056.04	40.92	3,273.45	85,109.70	42.96	3,437.16	89,366.16	45.11	3,608.94	93,832.44
PW Division Mgr. - Eng.	60	1127	692	78.83	6,306.41	163,966.66										98.54	7,883.01	204,958.26
PW Division Mgr. - Opr.	60	1126	691	78.83	6,306.41	163,966.66										98.54	7,883.01	204,958.26

				Step A			Step B			Step C			Step D			Step E		
Classification	Union Code	Occ Code	Pay Grade	Hourly	BiWeekly	Annual	Hourly2	BiWeekly3	Annual4	Hourly5	BiWeekly6	Annual7	Hourly8	BiWeekly9	Annual10	Hourly11	BiWeekly12	Annual13
PW Division Mgr. - Utl.	60	1128	693	78.83	6,306.41	163,966.66										98.54	7,883.01	204,958.26
Patrol Officer	40	4401	404	58.45	4,675.95	121,574.70	61.37	4,909.75	127,653.50	64.44	5,155.20	134,035.20	67.66	5,412.97	140,737.22	71.04	5,683.59	147,773.34
Patrol Officer Trainee	40	4402	458	57.19	4,575.53	118,963.78	60.05	4,804.22	124,909.72	63.06	5,044.49	131,156.74	66.21	5,296.68	137,713.68	69.52	5,561.46	144,597.96
Payroll Specialist	50	5102	546	39.64	3,171.01	82,446.26	41.62	3,329.57	86,568.82	43.70	3,496.03	90,896.78	45.89	3,670.86	95,442.36	48.18	3,854.33	100,212.58
Plan Check Engineer	50	3807	521	66.06	5,284.74	137,403.24	69.36	5,548.42	144,258.92	72.83	5,826.23	151,481.98	76.46	6,117.06	159,043.56	80.34	6,426.93	167,100.18
Plan Checker	50	3803	522	56.33	4,506.38	117,165.88	59.15	4,731.65	123,022.90	62.11	4,968.63	129,184.38	65.20	5,216.33	135,624.58	68.47	5,477.88	142,424.88
Plan Review Manager	60	1210	678	73.27	5,861.99	152,411.74										95.30	7,624.07	198,225.82
Planning Commissioners	70	1108	698	1.00	20.00	520.00										1.00	20.00	520.00
Planning Director	60	1803	607	88.20	7,055.63	183,446.38										123.47	9,877.89	256,825.14
Planning Manager	60	2803	602	67.22	5,377.53	139,815.78										94.11	7,528.53	195,741.78
Planning Technician	50	2813	554	41.10	3,288.12	85,491.12	43.16	3,452.88	89,774.88	45.33	3,626.11	94,278.86	47.58	3,806.73	98,974.98	49.96	3,996.87	103,918.62
Police Assistant	40	6401	450	54.48	4,358.54	113,322.04	57.21	4,576.41	118,986.66	60.07	4,805.22	124,935.72	63.07	5,045.52	131,183.52	66.22	5,297.80	137,742.80
Police Captain	60	1401	651	111.24	8,898.85	231,370.10										155.73	12,458.34	323,916.84
Police Clerk I	40	6402	451	39.05	3,124.14	81,227.64	41.00	3,280.38	85,289.88	43.05	3,444.37	89,553.62	45.21	3,616.60	94,031.60	47.47	3,797.35	98,731.10
Police Clerk II	40	6403	452	42.96	3,436.49	89,348.74	45.11	3,608.41	93,818.66	47.36	3,788.81	98,509.06	49.73	3,978.28	103,435.28	52.21	4,177.11	108,604.86
Police Clerk Supervisor	40	6404	454	49.62	3,969.23	103,199.98	52.10	4,167.73	108,360.98	54.70	4,376.06	113,777.56	57.44	4,594.89	119,467.14	60.31	4,824.61	125,439.86
Police Evidence Technician	40	8607	459	45.56	3,644.48	94,756.48	47.83	3,826.68	99,493.68	50.23	4,018.04	104,469.04	52.74	4,218.97	109,693.22	55.37	4,429.90	115,177.40
Police Lieutenant	40	2402	400	89.65	7,172.22	186,477.72	94.14	7,530.84	195,801.84	98.84	7,907.41	205,592.66	103.79	8,302.80	215,872.80	108.97	8,717.92	226,665.92
Police Officer	40	4403	403	63.91	5,113.19	132,942.94	67.11	5,368.93	139,592.18	70.47	5,637.36	146,571.36	73.99	5,919.17	153,898.42	77.69	6,215.20	161,595.20
Police Officer Trainee	40	4404	457	62.54	5,003.38	130,087.88	65.67	5,253.60	136,593.60	68.95	5,516.33	143,424.58	72.40	5,792.09	150,594.34	76.02	6,081.71	158,124.46
Police Sergeant	40	4405	401	77.21	6,176.88	160,598.88	81.07	6,485.73	168,628.98	85.13	6,810.01	177,060.26	89.38	7,150.61	185,915.86	93.85	7,508.13	195,211.38
Police Support Services Mgr	60	1404	657	65.19	5,215.27	135,597.02										91.27	7,301.71	189,844.46
Pool Manager	70	5608	708	23.22	1,857.60	48,297.60										29.90	2,392.00	62,192.00
Principal Civil Engineer	80	2204	822	68.48	5,478.50	142,441.00										89.07	7,125.29	185,257.54
Principal Planner	80	2811	823	70.61	5,648.47	146,860.22										85.51	6,841.17	177,870.42
Program Coordinator	50	5606	523	40.44	3,235.55	84,124.30										53.24	4,258.96	110,732.96
Public Information Officer	60	1122	674	64.70	5,175.88	134,572.88										90.58	7,246.26	188,402.76
Public Services Assistant I	50	6601	524	33.74	2,699.17	70,178.42	35.43	2,834.16	73,688.16	37.20	2,975.90	77,373.40	39.06	3,124.68	81,241.68	41.01	3,280.90	85,303.40
Public Services Assistant II	50	6602	525	37.11	2,969.08	77,196.08	38.97	3,117.58	81,057.08	40.92	3,273.44	85,109.44	42.96	3,437.17	89,366.42	45.11	3,608.94	93,832.44
Public Works Director	60	1204	635	90.69	7,255.01	188,630.26										126.96	10,157.05	264,083.30
Public Works Inspector	50	3202	526	54.48	4,358.21	113,313.46	57.20	4,576.17	118,980.42	60.06	4,804.93	124,928.18	63.07	5,045.20	131,175.20	66.22	5,297.43	137,733.18
Public Works Manager	60	1117	648	60.36	4,828.73	125,546.98										84.50	6,760.22	175,765.72
Purchasing Agent	80	1106	826	56.53	4,522.79	117,592.54										72.91	5,833.14	151,661.64
Recreation Administrative Asst	70	5619	712	17.70	1,416.00	36,816.00										24.66	1,972.80	51,292.80
Recreation Attendant	70	5618	711	17.70	1,416.00	36,816.00										24.66	1,972.80	51,292.80
Recreation Instructors	70	5607	707	18.82	1,505.60	39,145.60										37.64	3,011.20	78,291.20
Recreation Leader	70	5617	706	17.70	1,416.00	36,816.00										24.66	1,972.80	51,292.80
Recreation Services Supervisor	80	2601	827	54.01	4,320.43	112,331.18										71.08	5,686.26	147,842.76
Recreation Svcs Assistant I	50	8601	527	19.07	1,525.69	39,667.94	20.02	1,601.95	41,650.70	21.03	1,682.11	43,734.86	22.08	1,766.17	45,920.42	23.18	1,854.52	48,217.52
Recreation Svcs Assistant II	50	8602	528	22.64	1,811.48	47,098.48	23.78	1,902.25	49,458.50	24.97	1,997.32	51,930.32	26.22	2,097.23	54,527.98	27.53	2,202.04	57,253.04
Recreation Svcs Assistant III	50	8603	529	26.03	2,082.27	54,139.02	27.33	2,186.33	56,844.58	28.70	2,295.65	59,686.90	30.13	2,410.42	62,670.92	31.64	2,530.99	65,805.74
Recreation Svcs Assistant IV	50	8604	530	30.54	2,443.05	63,519.30	32.06	2,565.19	66,694.94	33.67	2,693.44	70,029.44	35.35	2,828.13	73,531.38	37.12	2,969.52	77,207.52
Retired Annuitant - Extra Help	70	5107	747	50.00	4,000.00	104,000.00										125.00	10,000.00	260,000.00
Retired Annuitant - Interim	70	5108	748	50.00	4,000.00	104,000.00										125.00	10,000.00	260,000.00
Risk Analyst	80	2130	857	44.63	3,570.76	92,839.76										58.75	4,700.21	122,205.46
SCADA Technician	20	8627	240	48.92	3,913.60	101,753.60	51.49	4,119.59	107,109.34	54.21	4,336.42	112,746.92	57.06	4,564.64	118,680.64	60.06	4,804.89	124,927.14
Senior Accountant	80	2110	829	50.24	4,019.43	104,505.18										66.13	5,290.45	137,551.70
Senior Accounting Technician	50	6106	539	40.82	3,265.99	84,915.74	42.87	3,429.32	89,162.32	45.01	3,600.78	93,620.28	47.26	3,780.85	98,302.10	49.62	3,969.85	103,216.10
Senior Administrative Analyst	80	2112	834	55.50	4,439.60	115,429.60										73.05	5,844.08	151,946.08
Senior Building Inspector	50	3804	531	62.92	5,033.70	130,876.20	66.07	5,285.46	137,421.96	69.37	5,549.69	144,291.94	72.84	5,827.14	151,505.64	76.48	6,118.52	159,081.52
Senior Buyer	80	2129	856	53.33	4,266.36	110,925.36										64.93	5,194.15	135,047.90
Senior Executive Assistant	80	6123	855	47.80	3,824.11	99,426.86										62.92	5,033.41	130,868.66
Senior HR Analyst	80	2122	841	51.81	4,145.16	107,774.16										68.20	5,456.27	141,863.02
Senior Plan Check Engineer	50	3806	534	72.67	5,813.21	151,143.46	76.30	6,104.03	158,704.78	80.11	6,408.96	166,632.96	84.11	6,729.08	174,956.08	88.32	7,065.46	183,701.96
Senior Planner	80	2805	830	64.73	5,178.17	134,632.42										78.68	6,294.27	163,651.02
Senior Public Works Inspector	50	3203	535	62.92	5,033.74	130,877.24	66.07	5,285.46	137,421.96	69.37	5,549.70	144,292.20	72.84	5,827.14	151,505.64	76.48	6,118.52	159,081.52
Senior Public Works Lead	20	8609	225	57.56	4,605.03	119,730.78	60.44	4,835.28	125,717.28	63.46	5,077.05	132,003.30	66.64	5,330.88	138,602.88	69.97	5,597.58	145,537.08
Senior SCADA Technician	20	8628	241	53.81	4,304.97	111,929.22	56.64	4,531.55	117,820.30	59.63	4,770.05	124,021.30	62.76	5,021.11	130,548.86	66.07	5,285.38	137,419.88
Special Project Associate	70	5105	750	20.00	1,600.00	41,600.00										50.00	4,000.00	104,000.00
Sr Code Enforcement Officer	50	5806	545	55.90	4,472.03	116,272.78	58.68	4,694.75	122,063.50	61.63	4,930.13	128,183.38	64.71	5,177.00	134,602.00	67.94	5,435.31	141,318.06
Sr. Public Services Assistant	50	5615	549	41.40	3,311.82	86,107.32	43.47	3,477.41	90,412.66	45.64	3,651.27	94,933.02	47.92	3,833.84	99,679.84	50.32	4,025.53	104,663.78
Sr. Special Projects Associate	70	5106	749	50.00	4,000.00	104,000.00										125.00	10,000.00	260,000.00
Staff Assistant	70	5104	745	17.70	1,416.00	36,816.00										27.39	2,191.20	56,971.20
Student Intern	70	5103	740	17.70	1,416.00	36,816.00										27.39	2,191.20	56,971.20
Transporation & Traffic Mgr	60	1202	675	64.70	5,175.88	134,572.88										90.58	7,246.26	188,402.76
Water Meter Technician I	20	8104	216	34.02	2,551.68	66,343.68	35.72	2,679.34	69,662.84	37.51	2,813.31	73,146.06	39.39	2,953.91	76,801.66	41.36	3,101.64	80,642.64
Water Meter Technician I -40	20	8620	235	34.03	2,722.00	70,772.00	35.73	2,858.11	74,310.86	37.51	3,000.59	78,015.34	39.38	3,150.50	81,913.00	41.36	3,308.95	86,032.70
Water Meter Technician II	20	8105	217	37.43	2,806.93	72,980.18	39.30	2,947.24	76,628.24	41.26	3,094.57	80,458.82	43.32	3,249.32	84,482.32	45.49	3,411.82	88,707.32
Water Meter Technician II -40	20	8621	236	37.43	2,994.19	77,848.94	39.30	3,144.14	81,747.64	41.26	3,300.44	85,811.44	43.33	3,466.31	90,124.06	45.50	3,639.63	94,630.38
Water Systems Operator	20	7211	219	52.01	3,901.04	101,427.04	54.61	4,095.68	106,487.68	57.34	4,300.86	111,822.36	60.21	4,515.91	117,413.66	63.22	4,741.72	123,284.72

				Step A			Step B			Step C			Step D			Step E		
Classification	Union Code	Occ Code	Pay Grade	Hourly	BiWeekly	Annual	Hourly2	BiWeekly3	Annual4	Hourly5	BiWeekly6	Annual7	Hourly8	BiWeekly9	Annual10	Hourly11	BiWeekly12	Annual13
Water Systems Operator - 40	20	8622	237	52.31	4,185.18	108,814.68	54.94	4,394.96	114,268.96	57.69	4,615.14	119,993.64	60.57	4,845.68	125,987.68	63.61	5,088.69	132,305.94

Union Code	Union Description
10	IAFF - International Association of Firefighters
20	MEA - Milpitas Employee Association
40	MPOA - Milpitas Police Officers Association
50	Pro-Tech - Milpitas Professional and Technical Group
60	Unrep - Unrepresented
70	Temps - Temporary
80	Mid-Con - UPEC Mid-Mgmt-Confidential Unit

CITY OF MILPITAS
AGENDA REPORT
(AR)

Item Title:	**Adopt a Resolution Authorizing the Purchase of a Sewer Closed Circuit Television (CCTV) Truck from U-Rock Utility Equipment through a Sourcewell Cooperative Purchase Agreement (Staff Contact: Christian Di Renzo, Public Works Director, 408-586-2602)**
Category:	Consent Calendar-Community Services and Sustainable Infrastructure
Meeting Date:	4/15/2025
Recommendation:	Adopt a resolution authorizing the purchase of a sewer closed circuit television (CCTV) camera truck from U-Rock Utility Equipment through a Sourcewell Cooperative Purchase Agreement in an amount not-to-exceed $372,517.68

BACKGROUND:

On June 23, 2024, the Main Lift Sewer Pump Station was burglarized, resulting in the theft of the Sewer Camera Closed Circuit Television (CCTV) truck (Unit U229-2016). This critical piece of equipment is essential for inspecting sewer and storm pipelines to evaluate maintenance and repair needs. While the truck was later recovered, it sustained extensive damage, resulting in a total loss.

The Utilities Division is responsible for the management, maintenance, and repair of approximately 175 miles of sewer pipelines and 105 miles of stormwater pipes. The CCTV truck plays an integral role in maintaining the division's operational efficiency by conducting inspections to identify issues such as blockages, leaks, or structural failures within the system. These inspections are essential for assessing the infrastructure's maintenance and repair needs, and for planning future projects to ensure the continued reliability and safety of the sewer and storm systems.

Given the crucial role the CCTV truck plays in the Utilities Division's ability to manage and maintain the sewer and storm systems, the loss of this equipment has left the division unable to efficiently perform its responsibilities. Purchasing a new CCTV truck will:

1. Restore the division's inspection capabilities: This truck will enable the team to conduct necessary inspections that are vital for the proper functioning of the sewer and stormwater infrastructure.
2. Ensure compliance with regulatory requirements: With the truck, the division can continue meeting state and federal inspection standards, reducing the risk of fines and penalties for non-compliance.
3. Prevent costly and preventable Sanitary Sewer Overflows (SSOs): By identifying problems before they escalate, a new CCTV truck will help minimize the risk of SSOs and reduce the potential for property damage, environmental harm, and costly emergency repairs.
4. Improve operational efficiency: The CCTV truck is specifically designed for sewer and storm pipe inspections, allowing for more efficient and thorough assessments than alternative methods.
5. Enhance the safety of workers and the public: With the ability to proactively identify and address issues, a new truck will contribute to safer working conditions for staff and a safer environment for the public.

ANALYSIS:

The Public Works Department recommends the purchase of a Sewer Camera CCTV truck through the Sourcewell Cooperative Purchase Agreement, awarded to Envirosight LLC. The truck will be purchased from the local vendor, U-Rock Utility Equipment. Staff received a demonstration of the truck which is equipped with advanced inspection technology and confirmed to be highly suitable for the department's sewer and

stormwater operations. The specific components included in the system are critical to ensuring effective inspections and minimizing potential disruptions to operations.

The acquisition of the electric CCTV van is strategically aligned with California's broader environmental objectives, including the state's Zero-Emission Vehicle (ZEV) mandate under the new Advanced Clean Fleet regulations. This purchase represents a forward-thinking and proactive decision not only supporting California's ambitious clean energy goals but also enhancing the city's operational efficiency and sustainability.

This purchase will directly support the division's ability to meet operational, regulatory, and environmental goals by improving the efficiency, accuracy, and safety of sewer and storm pipe inspections.

Key System Components:

1. RX130 HD Crawler Body: Provides reliable mobility for inspecting sewer and stormwater pipelines.
2. RCX90 HD Camera Head: Offers high-definition video for detailed inspections of pipes, ensuring accurate identification of issues.
3. RAX300 HD Reel with 984' Cable: Extends reach for efficient inspections, reducing time spent repositioning the truck.
4. VC500 HD Control Pendant: Allows operators precise control over the camera system for efficient inspections.
5. WinCan VX Software (Basic): Enables easy documentation, reporting, and analysis to support compliance and decision-making. The utility already owns the inspection license for this software and is integrated into our GIS and CMMS systems.
6. Handheld Wireless Remote Control: Increases flexibility and safety by allowing operators to control the system remotely.
7. Assortment of Wheels and Transport Case(s): Ensures adaptability to various pipe conditions and protects equipment during transport.
8. Tools: Provides essential on-site maintenance to minimize downtime.

Key Benefits:

1. Enhanced Operational Efficiency: The system's advanced components streamline inspections, improving productivity and reducing downtime.
2. Regulatory Compliance: WinCan VX software simplifies reporting and documentation, ensuring adherence to regulatory standards.
3. Cost Predictability: Warranty, maintenance plans, and the cooperative purchase agreement ensure predictable costs and extended equipment life.
4. Comprehensive Support: Access to training, factory-certified service centers, and a parts portal ensures continuous operational support.

Purchasing this CCTV truck is a strategic investment to enhance the efficiency and effectiveness of sewer and stormwater system inspections. It will help meet operational goals, reduce SSOs, ensure regulatory compliance, and improve long-term system reliability. The cooperative agreement provides a cost-effective solution to fulfill the department's needs.

Consistent with Section I-2-3.05 of the Municipal Code, which authorizes the Purchasing Agent to make purchases based upon an agreement or cooperative purchasing program entered into by another public agency, the Purchasing Agent has reviewed all the documentation from Sourcewell and has determined the underlying agreement or program was made utilizing competitive negotiation or procurement procedures at least as restrictive as the City's, and the price quoted is the same as offered in the original contract.

POLICY ALTERNATIVE(S):

Alternative 1: Do not approve the purchase.
Pros: None
Cons: The management, maintenance, and repair of the City sanitary sewer system is an essential, legally required function of the City, regulated under the State of California Statewide Waste Discharge Requirements General Order for sanitary sewer systems. If this CCTV truck is not purchased, staff will need to rely on

contracting out the inspection services to have sewer and storm pipes inspected or renting a speciality CCTV truck and associated equipment.
Reason for Not Recommending: Staff has identified and recommends the replacement of the stolen and vandalized truck as the most cost-effective approach to delivering this essential service. It is anticipated that contracting out this service and/or long-term rental of a specialty CCTV truck to meet the regulatory requirements would exceed the cost of in-house operations.

FISCAL IMPACT:

The total cost for purchasing the CCTV truck through the Sourcewell Cooperative Purchase Agreement will not exceed $372,517.68. Sufficient funding for this purchase is available in the Equipment Replacement Fund which has accrued $358,624 in replacement funds for this specific equipment. In addition, the City has recovered $150,000 in insurance monies for the respective claim filed, for a total of $508,624 non-General Fund dollars to underwrite this vehicle procurement, which is more than sufficient.

CALIFORNIA ENVIRONMENTAL QUALITY ACT (CEQA):

This action does not constitute a “project” within the meaning of Public Resources Code Section 21065 and/or the California Environmental Quality Act (CEQA) Guidelines Section 15060(c)(2), 15262, and/or 15378 as it has no potential to result in either a direct physical change in the environment, or a reasonably foreseeable indirect physical change in the environment and, moreover, is an administrative action related to the purchase of supplies within the meaning of CEQA Guidelines Section15378(b)(2). Even if this activity is a project for CEQA analysis, it falls within the “Common Sense” CEQA exemption set forth in CEQA Guidelines Section 15061(b)(3) as it can be seen with certainty that there is no possibility that the activity in question may have a significant effect on the environment. No unusual circumstances exist and none of the exceptions under CEQA Guidelines Section 15300.2 apply.

RECOMMENDATION:

Adopt a resolution authorizing the purchase of a sewer closed circuit television (CCTV) camera truck from U-Rock Utility Equipment through a Sourcewell Cooperative Purchase Agreement in an amount not-to-exceed $372,517.68.

ATTACHMENT(S):
(a) U-Rock Utility Equipment Quote
(b) Resolution

U-Rock Utility Equipment
3734 Bradview Dr # A
Sacramento, CA 95827
+19162947693
mpaduveris@urockutility.com
www.urockutility.com

Sourcewell Quote integrated lift with Desktop Controller

ADDRESS
Milpitas City of 1265 N Milpitas Boulevard Milpitas, CA 95035

SHIP TO
Milpitas City of 1265 N Milpitas Boulevard Milpitas, CA 95035

ESTIMATE #	DATE	EXPIRATION DATE
2361	03/04/2025	04/04/2025

SHIP VIA
Delivered

SALES REP
Bianca Sandoval

ACTIVITY	DESCRIPTION	QTY	RATE	AMOUNT
Ford Transit T-350 Electric	2025 Ford E-Transit Cargo Van (W3X) T-350 148" EL Hi Rf 9500 GVWR RWD	1	58,290.00	58,290.00T
Transit Electric Build	Preferred Build per Specification	1	65,250.00	65,250.00T
E-RX-SYS-PRO-HDL	System includes DCX5000 Desktop Controller with CCUI including emergency stop, RAX300 Automatic Cable Reel with 300M (1000ft) cable, wireless remote controller, reel mounting frame, RX130 Quick Change version crawler with 3 sets of rubber wheels for 6Ó to 12Ó pipe diameter and integrated lift. RCX90 pan, tilt, zoom camera, pressurization kit, and Wincan VX entry license	1	127,316.63	127,316.63T
E-559-3900-00	HD RAL200 LED Auxiliary Light with Backeye Camera for RVX	1	5,346.79	5,346.79T
E-000-0036-00	Tyger Tail	1	50.00	50.00T
E-000-0035-00	Top Manhole Roller	1	487.92	487.92T
E-080-0709-00	Quick Change Wheel HMS (Small Aggressive) Wheel D85x18 / d12 QCD	4	523.50	2,094.00T
E-080-0711-00	HMS Wheel D120x31 / d12 QCD (Md Aggressive)	4	680.55	2,722.20T
E-080-0710-00	HMS Wheel D145x52 / d12 QCD (Lg Aggressive)	4	701.49	2,805.96T
E-080-0704-02	Wheel D175x88 / d12 QCD (XXL Rubber)	4	638.67	2,554.68T
Carbon Monoxide Detector	Battery Operated Carbon Monoxide Detector	1	142.31	142.31T
Computer Monitor	Additional 21.5" Tru-Vu Monitor w/ mount (for rackmount)	1	1,321.45	1,321.45T
Insulation	Wall Insulation	1	1,524.75	1,524.75T
Wall Mount Heater	Wall Mounted Heater	1	467.59	467.59T

ACTIVITY	DESCRIPTION	QTY	RATE	AMOUNT
UPS	Rack-Mount UPS System	1	2,020.00	2,020.00T
H-RACKMOUNT-01	Rackmount Computer	1	3,120.00	3,120.00T
H-AverCard	Aver Media Card PCI	1	500.00	500.00T
Solar	Solar system	1	4,000.00	4,000.00T
E-555-3900-00	HD RX95 Crawler-6 wheel drive, inclination, location transmitter, 6mm axle wheels	1	18,140.00	18,140.00T
E-595-3960-02	HD PTC50 Camera (For RX95, etc.)	1	18,140.00	18,140.00T
E-080-0505-00	Small Rubber wheel - SV 95 - Rovver 100	6	136.11	816.66T
Inbound	Freight	1	7,000.00	7,000.00T
DMV Municpal Only	Licensing and Doc fees	1	500.00	500.00T
E-V-SYS-VS-ULTRA-330	VS Ultra 330'/100m Self Leveling Sytem with Axial Camera	1	13,722.75	13,722.75T
LF-2200-KIT	LineFinder 2200 Kit | Multi Frequency	1	2,253.90	2,253.90T

Sourcewell Contract 120721-EVS

SUBTOTAL	340,587.59
TAX	31,930.09
TOTAL	**$372,517.68**

Accepted By

Accepted Date

RESOLUTION NO. _____

A RESOLUTION OF THE CITY COUNCIL OF THE CITY OF MILPITAS APPROVING THE PURCHASE OF A SEWER CLOSED CIRCUIT TELEVISION (CCTV) TRUCK AND AUTHORIZING THE CITY MANAGER TO EXECUTE A SOURCEWELL COOPERATIVE PURCHASE AGREEMENT WITH ENVIROSIGHT LLC FOR THE PURCHASE FOR A TOTAL NOT-TO-EXCEED AMOUNT OF $372,517.68.

WHEREAS, the City of Milpitas seeks to purchase a replacement Sewer Closed Circuit Television (CCTV) for the Public Works Department; and

WHEREAS, Milpitas Municipal Code Section I-2-3.08 ("Cooperative Procurement") authorizes the City Council to award contracts without competition, when the purchase is pursuant to a cooperative agreement by another public agency in California that used competitive negotiation or bidding procedures at least as restrictive as the City's; and

WHEREAS, Municipal Code Section I-2-3.08 specifically authorizes the Purchasing Agent to make such purchases based on an agreement or cooperative purchasing program entered into by a public agency, as defined by Government Code Section 6500, regardless of whether the City is a named party to the agreement or an actual participant in such a program, provided that the underlying purchase was made using competitive negotiation or bidding procedures at least as restrictive as the City's, and that the supplies or general services purchased must be the same and be offered at the same price as the supplies and general services subject to the agreement or program; and

WHEREAS, the City of Milpitas has been a member of National Joint Powers Alliance (NJPA) since 2008. On June 6, 2018, NJPA changed its organization name to Sourcewell and all prior agreements entered into with NJPA have and will continue without impact. Sourcewell is a local government unit, public corporation and public agency pursuant to the Minnesota Constitution and enabling law Minn. Stat. § 123A.21. Sourcewell cooperative purchasing contracts are made available through the joint exercise of powers law Minn. Stat. § 471.59 to all member agencies; and

WHEREAS, on August 15, 2023, contract No. 120721-EVS was awarded to Envirosight LLC pursuant to Sourcewell Request for Proposal (RFP) No. 120721 entitled "Sewer inspection and maintenance equipment" and is current through January 17, 2026, and

WHEREAS, the purchase of the sewer CCTV truck will be purchased from the local vendor, U-Rock Utility Equipment, and

WHEREAS, the City Manager is authorized to execute a purchase agreement with Envirosight LLC for a not-to-exceed amount of $372,517.68.

NOW, THEREFORE, the City Council of the City of Milpitas hereby finds, determines, and resolves as follows:

1. The City Council has duly considered the full record before it, which may include but is not limited to such things as the City staff report, testimony by staff and the public, and other materials and evidence submitted or provided to it. Furthermore, the recitals set forth above are found to be true and correct and are incorporated herein by reference.

2. The City Purchasing Agent is authorized to execute a purchase order with Envirosight LLC, for an amount not-to-exceed $372,517.68.

PASSED AND ADOPTED this day of , 2025, by the following vote:

AYES:

NOES:

ABSENT:

ABSTAIN:

ATTEST:

Suzanne Guzzetta, City Clerk

APPROVED:

Carmen Montano, Mayor

APPROVED AS TO FORM:

Christopher Creech, Acting City Attorney

CITY OF MILPITAS
AGENDA REPORT
(AR)

Item Title:	**Receive an Update on the Security Improvements at the McCarthy Ranch Sewer Lift Station (Main Lift) and Determine that the Condition Continues to Constitute an Emergency (Staff Contact: Christian Di Renzo, Public Works Director, 408-586-2602)**
Category:	Consent Calendar-Community Services and Sustainable Infrastructure
Meeting Date:	4/15/2025
Recommendation:	(1) Receive an update on the security improvements at the McCarthy Ranch Sewer Lift Station; and (2) Determine by a four-fifths vote that the condition continues to constitute an emergency.

BACKGROUND:

Pursuant to Public Contract Code section 22050 and the attached Council Resolution No. 9134, the Director of Public Works, in the case of emergency, may authorize a repair of a public facility and procure the work without giving notice for bids. An emergency is defined as "a sudden, unexpected occurrence that poses a clear and imminent danger, requiring immediate action to prevent or mitigate the loss or impairment of life, health, property, or essential public services." Additionally, State law requires the Public Works Director, as the City official with delegated authority to take emergency action, to report any emergency authorization and the reason(s) for the authorization to the City Council not later than seven days after the action, or at its next regularly scheduled meeting if that meeting will occur not later than 14 days after the action. Further, the Public Works Director is required to report why the emergency would not permit a delay resulting from a competitive solicitation for bids and the City Council is required to review the emergency action at every regularly scheduled meeting thereafter until the emergency repair is completed. The City Council shall continue to review the emergency action at every regularly scheduled meeting thereafter until the action is terminated. At each review, the City Council shall determine, by a four-fifths vote, whether there is a need to continue the action.

Consistent with applicable State law and Council Resolution, on July 30, 2024, the Public Works Director declared an emergency and authorized the City to contract with Trofholz Technologies and Diamond Fencing to implement various security and access control improvements to the McCarthy Ranch Sewer Lift Station (Main Lift). Further, within the required timeframe the Public Works Director informed the City Council via Information Memorandum on July 31, 2024, regarding the emergency authorization, the reasons for the authorization, and the cost for repair in a not to exceed amount of $700,000.

PROJECT/STATUS UPDATE:

The perimeter fence has been completed and currently awaiting the materials for the gate replacement. The estimated date for arrival is April 18, 2025, with a two-week installation schedule and a final project completion date sometime the first week of May. Cameras on the electrical building are operational and provide coverage/recording of the main gate as well as the sewer pump station buildings. Access control readers and motions sensors have been installed and are active. Trofholz and the Information Technology Department are currently troubleshooting point-to-point antennas for the cameras in the equipment yard.

FISCAL IMPACT:

Funding for these repairs is available in the City's Capital Improvement Program (CIP) budget. CIP Project 6124 – Sewer Pump Station Rehabilitation Project will fund the installation of security cameras, card readers, and motion sensors. The funding source of this CIP project is Sewer Infrastructure Fund. The available balance as of 01/07/2025 is $1,277,987.

CIP 6130 – Main Lift Odor Emission Control Project will fund the removal and replacement of the perimeter

fencing. The funding source of this CIP Project are Sewer Infrastructure Fund, and Sewer Treatment Fund. The available balance as of 01/07/2025 is $14,852.

CALIFORNIA ENVIRONMENTAL QUALITY ACT (CEQA):
The emergency repair work is exempt from CEQA, per CEQA Guidelines Section 15301, Existing Facilities and 15302, Replacement or Reconstruction.

RECOMMENDATION:
(a) Receive an update on the security improvements at the McCarthy Ranch Sewer Lift Station.
(b) Determine by a four-fifths vote that the condition continues to constitute an emergency.

ATTACHMENT(S):
None.

CITY OF MILPITAS
AGENDA REPORT
(AR)

Item Title:	**Consider a Fee Waiver Request from the Samuel Ayer High School Alumni Association (Staff Contact: Renee Lorentzen, Director of Recreation and Community Services, 408-586-3409)**
Category:	Consent Calendar-Community Services and Sustainable Infrastructure
Meeting Date:	4/15/2025
Recommendation:	Approve a Fee Waiver of $1,500 for the Samuel Ayer High School Alumni Association 25th Annual All Class Reunion Picnic at Murphy Park on September 20, 2025.

BACKGROUND:
On February 8, 2025, staff received a Donation and Fee Waiver/Reduction Policy request from the Samuel Ayer High School Alumni Association for their Annual All Class Reunion Picnic on Saturday, September 20, 2025, at Murphy Park. The request is for a $1,500 fee waiver for the open space rental fees and special event permit fees.

ANALYSIS:
One Donation and Fee Waiver/Reduction Policy request application was received by the Recreation and Community Services Department. The application request was for one (1) fee waiver.

Fee Waiver Request

The Samual Ayer High School Alumni Association submitted the required applications and documentation for the Annual All Class Reunion Picnic:

- Open Space Rental Application for Murphy Park
- City Council Donation and Fee Waiver/Reduction Policy request
- Non-profit status letter

The Samual Ayer High School Alumni Association is requesting the City Council waive eligible fees for the open space rental fees and special event permit fees in the amount of $1,500. Fees ineligible for waiver include the rental application fee of $30 and refundable security/damage deposit of $1,000. Refundable security/damage deposits are refunded within 30 days of the rental.

Milpitas City Council adopted an updated “City Council Donation and Fee Waiver/Reduction Policy” on June 21, 2022. Per the policy, eligible organizations can request City fees to be waived up to $1,500 or a donation amount up to $500 to be granted upon request. Eligible organizations are defined as “a non-profit organization as described by the Internal Revenue Section such as 501(c)(3) or an intergovernmental agency; Non-discriminatory, and non-political in nature.” Fee Waiver or Donation requests for events must provide a community benefit within the City of Milpitas proper. Applying organizations must provide proof of non-profit status from the federal Internal Revenue Service or the state Franchise Tax Board.

As required, the Samual Ayer High School Alumni Association has provided a copy of their determination letter from the Internal Revenue Service stating they are tax-exempt organizations. The applicant meets the requirements as outlined in the Council adopted Donation and Fee Waiver/Reduction Policy.

POLICY ALTERNATIVE(S):

Alternative: Do not approve the received fee waiver and donation application as requested.

Pros: The City’s General Fund will not incur the costs of the fees waived.

Con: Denial of the request may not allow the non-profit organization to hold their events.

Reason not recommended: This request is consistent with the Council approved Policy.

FISCAL IMPACT:
$25,000 was approved and included in the FY 2024-25 City budget for City Council's Unallocated Community Promotions with a current balance of $17,024. If this request is approved by the City Council, then $15,524 would remain in that line item of the current year's budget.

CALIFORNIA ENVIRONMENTAL QUALITY ACT (CEQA):
The action is an organizational or administrative activity of the City government that will not result in direct or indirect physical changes in the environment and is not a project pursuant to Cal. Code of Regs., tit. 14, § 15378.

RECOMMENDATION:
Approve a Fee Waiver of $1,500 for the Samual Ayer High School Alumni Association Annual All Class Reunion Picnic at Murphy Park on September 20, 2025.

ATTACHMENT(S):
(a) Fee Waiver Application
(b) IRS Tax Determination Letter

City of Milpitas City Council Non-Profit Donation/Fee Waiver Request Program Application Form #40

Name of Organization	Samuel Ayer High School Alumni Association
Is there a Milpitas Branch or Affiliation?	- Yes
Organization Address (as listed on your 501 (c) 3)	[redacted] United States
Organization Web Site	https://myevent.com/sahsalumniAssociation
Organization Contact Name	Jacob Abeytia
Organization Contact Phone	[redacted]
Organization Contact Email	[redacted]
Request Type	- Fee Waiver (up to $1,500)
Requested Amount (request types cannot be combined or exceed maximum listed amounts)	$1500
Description of Use of Funds/Fees to be Waived	Offset expenses
Event Name	25th Annual All Class Reunion Picnic
Event Date(s)	Sep 20, 2025
Event Location (Facility Name and Address)	Murphy Park
Is your Event Open to the Public	Yes
What is you anticipated Event attendance?	250+

What is the purpose of the Event?
This will be the 25th annual Samuel Ayer High School All Class Reunion Picnic. Alumni from all over the country come back to Milpitas to renew friendships and create new memories. Alumni will stay at local hotels and dine at some of their favorite "old" and new restaurants. Other events will be held the same weekend such as class reunions and casual get togethers.

Is your event a Fundraiser	Yes
What percentage of your event fundraising proceeds will benefit the Milpitas Community?	60% or more

How will the Milpitas Community Benefit from this Event?
This event raises funds for the Joseph House Scholarship. Joseph House was a past Mayor of Milpitas as well an educator at Samuel Ayer High School.

How will the City's contribution (if approved) be recognized in event media and publicity?
It is mentioned on our Facebook Group page, on our flyers and our newsletter. A banner will also be displayed at the picnic.

Upload your Entity Status Letter (Entity Name listed on this application must match the Entity Status Letter Name) [redacted]

Within 60 days after completion of the event for which a donation was received or a fee waiver was granted by the City of Milpitas, your organization will provide a report to the Director of Recreation and Community Services to include at minimum: number of participants, copies of all publicity of the event, any benefit to the community, amount of funds raised and an accounting of how the proceeds of the event will be dispersed.

Failure to abide by the rules and procedures set

forth in the City Council Donation/Fee Waiver Policy will result in the organization being denied for funding and/or fee waiver in the future. Draw your signature into the box below.	

Department of the Treasury
Internal Revenue Service
Tax Exempt and Government Entities
P.O. Box 2508
Cincinnati, OH 45201

Date:
04/19/2023
Employer ID number:
[redacted]
Person to contact:
Name: Customer Service
ID number: 31954
Telephone: 877-829-5500
Accounting period ending:
December 31
Public charity status:
509(a)(2)
Form 990 / 990-EZ / 990-N required:
Yes
Effective date of exemption:
December 9, 2022
Contribution deductibility:
Yes
Addendum applies:
No
DLN:
26053503003983

SAMUEL AYER HIGH SCHOOL ALUMNI
ASSOCIATION
C/O JACOB P ABEYTIA
1975 OLD CALAVERAS RD
MILPITAS, CA 95035

Dear Applicant:

We're pleased to tell you we determined you're exempt from federal income tax under Internal Revenue Code (IRC) Section 501(c)(3). Donors can deduct contributions they make to you under IRC Section 170. You're also qualified to receive tax deductible bequests, devises, transfers or gifts under Section 2055, 2106, or 2522. This letter could help resolve questions on your exempt status. Please keep it for your records.

Organizations exempt under IRC Section 501(c)(3) are further classified as either public charities or private foundations. We determined you're a public charity under the IRC Section listed at the top of this letter.

If we indicated at the top of this letter that you're required to file Form 990/990-EZ/990-N, our records show you're required to file an annual information return (Form 990 or Form 990-EZ) or electronic notice (Form 990-N, the e-Postcard). If you don't file a required return or notice for three consecutive years, your exempt status will be automatically revoked.

If we indicated at the top of this letter that an addendum applies, the enclosed addendum is an integral part of this letter.

For important information about your responsibilities as a tax-exempt organization, go to www.irs.gov/charities. Enter "4221-PC" in the search bar to view Publication 4221-PC, Compliance Guide for 501(c)(3) Public Charities, which describes your recordkeeping, reporting, and disclosure requirements.

Sincerely,

Stephen A. Martin
Director, Exempt Organizations
Rulings and Agreements

CITY OF MILPITAS
AGENDA REPORT
(AR)

Item Title:	**Adopt a Resolution to Amend the Site Development Permit and Approve a Density Bonus Permit to Modify the Design and Unit Configuration of a Building at 1355 California Circle (Staff Contact: Jay Lee, Planning Director, 408-586-3077)**
Category:	Community Development
Meeting Date:	4/15/2025
Recommendation:	(1) Conduct a public hearing; and (2) Adopt a resolution to amend the Site Development Permit and approve a Density Bonus Permit for an apartment building at 1355 California Circle, subject to findings and conditions of approval.

BACKGROUND:

On November 7, 2023, the City of Milpitas City Council approved a development consisting of 131 townhome condominium residential units, up to 51-feet in height, a 75-unit residential apartment building, up to 77 feet, four inches in height, for a total of 206 residential units (1355 California Circle Project) submitted by Pulte Homes (Applicant). The development also included a 0.32-acre internal park and associated site improvements on a 6.7-acre site at 1355 California Circle.

On September 12, 2024, Pulte Homes (Applicant) submitted an application requesting a Site Development Permit (SDP) Amendment and Density Bonus Permit to modify the development of a 75 residential-unit apartment building within the 1355 California Circle Project.

The following is a summary of the Applicant's request:

1. Site Development Permit Amendment: To allow the modification of a previously approved residential apartment building.

2. Density Bonus Permit: To ensure compliance with State Density Bonus Law and ensure the project eligibility for certain concessions and waivers under State Density Bonus Law.

On February 12, 2025, the Planning Commission voted unanimously (4-0) recommending the City Council approve the modification, subject to the findings and Conditions of Approval. Commissioner Kong requested the Applicant work with the residential townhome development homeowners association to potentially allow apartment residents to utilize guest parking within the townhome development.

Staff reviewed the entitlement applications outlined above and found the amendment consistent with the policies, standards, and processes outlined in the Milpitas General Plan 2040 and Zoning Ordinance. This report provides specific details and analysis and recommends the Planning Commission open and close the public hearing, consider the statutory exemption as outlined in CEQA Guidelines Section 15162 (Subsequent EIRs and Negative Declaration) and adopt Resolution No. 25-003, recommending that the City Council approve the above applications, subject to the findings and Conditions of Approval.

ANALYSIS:

Project Description

Pulte Homes has submitted a Site Development Permit (SDP) Amendment and Density Bonus application to modify the 75-residential unit apartment building within the 1355 California Circle Project. The apartment building was previously approved to include the following features:

- A L-shaped apartment building with a contemporary architectural design that includes shades of white, blue, beige, and light and dark grays exteriors.
- Approximately 77 feet and four inches (six-stories) in height.
- A unit mix that includes 16 studios, 40 one-bedroom units, and 19 two-bedroom units (totaling 75 units) ranging in size from between 411 to 840 square feet.
- 85 parking spaces (1.13 stalls per residential unit and 1.01 stalls per bedroom).
- 31 residential units designated to low-income (51-80 percent Area Median Income) individuals or households.
- 44 residential units designated to moderate-income individuals or households.
- Two outdoor amenity areas (one in the front and one in the rear of the building).

The proposed apartment building will incorporate many of the same features as the previously approved building, with the following modifications:

- A U-shaped modern architectural design that includes shades of blue, white, and light gray exteriors
- Approximately 65 feet (five-stories) in height.
- A unit mix that includes 30 one-bedroom units, 21 two-bedroom units, and 24 three-bedrooms units (totaling 75 units) ranging in size from between 600 to 1,043 square feet.
- 86 parking spaces (1.13 stalls per residential unit and 0.59 stalls per bedroom)
- All 75 residential units designated to either low or very low (31-50 percent Area Median Income) income individuals or households.
- Two outdoor amenity areas (one in the front above the first floor and one in the center of the building).

The proposed amendment is eligible for certain concessions, waivers, and parking incentives under State Density Bonus Law (Gov. Code § 65915 et seq.) as more than ten percent (10%) of the total units will be reserved for lower-income households. The “Project Analysis” section of this staff report includes a full discussion of the State Density Bonus provisions related to this Project.

Table 1 below summarize the land use designation and surrounding uses of nearby properties:

Table 1: Surrounding Zoning and Land Uses

	General Plan	Zoning	Existing Uses
Subject Site	Neighborhood Commercial Mixed Use (NCMU)	Mixed Use (MXD)	Vacant
North	Neighborhood Commercial Mixed Use (NCMU)	Industrial Park (MP)	Wholesale Furniture
South	Neighborhood Commercial Mixed Use (NCMU)	Mixed Use (MXD)	Vacant
East	Neighborhood Commercial Mixed Use (NCMU)	Industrial Park (MP)	Place of Assembly
West	N/A	N/A	Interstate 880

General Plan Conformance

The Project is consistent with General Plan policies, as demonstrated within Table 2.

Table 2: General Plan Consistency

Policy	Conformance
Policy LU 1-4: *Continue to provide for a variety of housing types and densities that meet the needs of individuals and families and offer residents of all income levels, age groups, and special needs sufficient housing opportunities and choices for locating in Milpitas.*	**Consistent.** The development includes a total of 206 new housing units, with 75 of those units within the previously approved apartment building. All 75 units would be rental units and offered at a below-market rate. The Project Applicant would allow Milpitas Unified School District Employees (MUSD) first right of refusal for the 75 apartment units, consistent with City policy to provide a variety of housing types for individuals and families of all types of income.
Policy LU 4-4: *Encourage new development to facilitate pedestrian, bicycle and transit access through techniques such as minimizing building separation from public sidewalks; providing safe, direct, accessible, convenient, and pleasant pedestrian connections; including secure and convenient bike storage; and orienting building entrances to transit service.*	**Consistent**. Approving the proposed apartment modification would not impact the investment into pedestrian, bicycle and transit access. The developer has designed the project to maintain the existing sidewalks and develop interior walkways to support pedestrian travel. Bicycle parking will also be developed and bicycle storage areas have been identified in the modified apartment building. Lastly, a pedestrian crosswalk across California Circle will remain, providing pedestrian access to nearby walking trails and a future public park within the new development.
Policy LU 2-3: *Allow densities and intensities which exceed the generally allowed ranges defined by the underlying land use for projects utilizing Density Bonus provisions (included within the Milpitas Affordable Housing Ordinance Title XII - HOUSING Chapter 1 - AFFORDABLE HOUSING ORDINANCE) including bonuses for senior housing, affordable housing, and for projects within designated overlay districts included in Milpitas Municipal Code Section 12 - Overlay Districts and Standards*	**Consistent.** The apartment modification includes a proposal to provide all 75 residential units to either low or very-low-income individuals or families, consistent with the GP policy to support density bonuses for affordable housing.

Zoning Conformance

The proposed apartment modification is consistent with most of the Mixed-Use Zoning (MXD) District development standards, as demonstrated in Table 4. Where conformance cannot be found, the applicant has requested waivers as permitted per State Density Bonus Law, for certain affordable housing projects.

Table 3: Summary of MXD Development Standards

Development Standard (MXD)	Minimum Required	Proposed	Conformance
Density	21-30 du/ac	30.8 du/acre (for the 6.7-acre site, as contemplated for the entire project)	Yes, *with Density Bonus*

Development Standard (MXD)	Minimum Required	Proposed	Conformance
Front Yard Setback (east)	Minimum of 8 feet and a maximum of 15 feet from back of sidewalk.	4 feet, 9 inches to 13 feet, 7 inches	Yes, *with Density Bonus Waiver*
Side Yard Setback (north)	10 feet	14 feet, 6 inches	Yes
Side Yard Setback (south)	10 feet	4 feet, 5 inches	Yes, *with Density Bonus Waiver*
Rear Yard Setback (west)	10 feet	11 feet	Yes
Height	3 stories and 45 feet	~65 feet	Yes, *with Density Bonus Waiver*
Landscaping	All required front and street setback areas shall be landscaped or paved to allow for outdoor seating, display or goods, or street furniture	All required front and street setback areas are landscaped or paved	Yes
Parking	1 bedroom: 1.5 per unit(45 spaces) 2-3 bedrooms: 2 per unit(90 spaces) Guest: Projects with parking structures: 15 percent of the total required.(20 spaces) **Total – 155 spaces**	86 spaces	Yes, *with Density Bonus Parking Reduction Incentive*
Bicycle Parking	5 percent of the total required Total: 8	8	Yes

State Density Bonus Law

State Density Bonus Law (Gov. Code § 65915 et seq.) incentivizes affordable housing by offering developers certain benefits. According to State Density Bonus Law (SDBL), developers that reserve "*at least 10 percent of the housing units restricted to lower income residents*" are entitled to waivers, concessions, and incentives (which include parking reductions).The city cannot deny a waiver, concession, or incentive unless it can demonstrate the exception will not *result in an identifiable cost reduction* for the project, *have a specific adverse impact upon public health and safety* (per Section 50052.5 of the California Health and Safety Code),

would be prohibited by CEQA (Pub. Resources Code, § 21000 et seq.), or otherwise be *contrary to state or federal law*.

Since the 1355 California Circle Project reserved more than 10 percent of the total housing units to low-income households, the applicant was entitled to waivers and three concessions under SDBL. The Applicant requested (and obtained approval) for the following waivers and concessions in 2023 from the Milpitas Municipal Code (MMC).

1. Density Bonus: The Applicant is permitted to develop more dwelling units than the zoning standard allows.
2. Front Setback: The Applicant is permitted to have an approximately 19-foot front setback when a maximum front setback of 15-feet is required.
3. Building Height: The Applicant is permitted to develop the townhomes and apartment building over the 3 stories, 45 feet height limit is required.
4. Parking Reduction Incentive: The Applicant is permitted to provide 85 parking spaces for the apartment building when 140 parking spaces were required.
5. Additional Parking Incentive: The Applicant is permitted to provide 46 guest vehicle parking spaces for the townhomes and apartment when 52.4 vehicle parking spaces were required.

As previously discussed, the proposed Project will not affect the total number of affordable units previously approved; therefore, the Project is still entitled to additional waivers and the remaining concessions.

Table 4 outlines the modified waivers, new waivers, and parking reduction requested by the Applicant for City Council's consideration.

Table 4: State Density Bonus – Waivers, Concessions, and Incentives

Type of Modification	Standard	Applicant Request	Justification	Waiver Previously Requested	Discretion
Waiver for Front Setback	Minimum 8 feet, Maximum 15 feet	4 feet, 9 inches to 13 feet, 7 inches	A lesser front yard setback provides the developer greater floor area to increase affordable units on-site.	Yes	This waiver is allowed under State Density Bonus.
Waiver for Side Setback	10 feet	4 feet, 5 inches	The reduced side setback is needed to comply with Fire requirements for adequate space to maneuver aerial apparatus along the northern property line.	No	This waiver is allowed under State Density Bonus Law.

Type of Modification	Standard	Applicant Request	Justification	Waiver Previously Requested	Discretion
Waiver for Building Height	3 stories and 45 feet	5 stories and 65 feet	A greater height provides the developer more floor area to increase affordable units on-site.	Yes	This waiver is allowed under State Density Bonus Law.
Parking Reduction Incentive	155 spaces (Pursuant to MMC Section XI-10-53.09)	86 spaces	State Density Bonus Law dictates minimum parking standards for qualifying affordable housing developments.	Yes	This parking reduction is allowed under State Density Bonus Law.

There are three waivers and one parking incentive that has been requested under SDBL. The applicant has provided a project narrative stating why the concession, waivers, and incentives are appropriate.

The waiver for the front setback, building height, and parking incentive were previously approved by City Council. The new waiver request is associated with the side setback. The applicant states "*an aerial apparatus access roadway is required by the Fire Department to serve the building, because it must be within 30' of the exterior residential wall. Waiver of this side yard setback allows for the building to be within the 30' range for fire. Due to fire requirements, not granting this side yard setback would preclude the construction of the development of affordable units.*" Planning staff agree that the waiver is valid, because not allowing it may *adversely impact public health and safety*.

Architectural Design

The previously approved apartment building was a six-story, L-shaped contemporary structure with a distinctive façade combining different colors and materials, including three main architectural volumes with varying heights and setbacks and a dark grey, light grey and white color palette and black vinyl windows. The ground floor base podium was made of concrete material and includes large windows and street-level access. The window patterns were maintained vertically, providing an aesthetic consistency that complimented the structure. Figure 1 is a rendering of the previously approved apartment building and Figure 2 is the first floor site plan.

Figure 1 – Previously Approved Apartment Building - Rendering

Figure 2 – Previously Approved Apartment Building – Site Plan

The proposed apartment building has a subtlety different design focus. The five-story modern design is in more of a U-shaped design with sea-green/blue panels with white trim around the vinyl windows. The central white vertical element includes wood-look accents that create visual interest and assist in breaking up the front façade. The subtle roofline variations add architectural interest, but do not mimic the substantial roofline changes of the previously approved apartment. Like the previously approved apartment building, the new design incorporates a base podium. The difference between the previously approved building and the new one is the materials proposed for the podium. The new design includes a brick veneer and large storefront windows. In summary, the overall design provides clean lines and simple geometric forms to create a modern appearance, consistent with the proposed townhomes being built to the south. Furthermore, the new apartment building design has less articulation which lowers costs and makes this project more financially feasible. Figure 3 is a rendering of the new proposed apartment building and Figure 4 is the proposed first floor site plan.

Figure 3 – Proposed Apartment Building - Rendering

Figure 4 – Proposed Apartment Building – Site Plan

Affordable Housing Ordinance

According to Milpitas Municipal Code (MMC) Section XII-1-3.00 (Affordable Housing), an applicant must reserve 15 percent of the total number of dwelling units as affordable units. Per the Affordable Housing Ordinance (AHO), the affordable units need to be "reasonably dispersed" and "reasonably consistent" with the market rate units. Table 5 demonstrates the objective requirements to meet the AHO standards for the 1355 California Circle Project.

Table 5: AHO Requirements

Unit Type	Units Developed	AHO Requirement	Units Required
Townhome	131	15 percent	19.65
Apartment	75	15 percent	11.25
		Total Units required	30.9 units

At the November 7, 2023, City Council meeting, the Applicant presented an alternative method of meeting the intent of the AHO, known as an "Affordable Housing Ordinance Exception." The applicant proposed reserving 31 apartment units for lower-income households, meeting the 15 percent requirement of the total number of dwelling units. The Applicant also proposed reserving the remaining 44 apartment units for moderate-income households, bringing the approved project's total Below Market Rate (BMR) contribution to 36.4 percent. Furthermore, the Applicant committed to working with Milpitas Unified School District (MUSD) to provide housing opportunities for their employees that meet the income qualifications. The reservation of more units was proposed in consideration of reserving both townhome and apartment affordable units. The City Council approved the AHO exception.

The proposed SDP amendment and Density Bonus Permit will not change the conditions of the previous approved project. The only difference is that instead of reserving 15 percent of the total units for low-income households, 36.4 percent of the total units will be reserved for either low or very low-income households, significantly increasing the opportunities to provide housing for all income levels. The Applicant is requesting the City Council agree to again approve the AHO exception, based on the findings in the staff report and resolution.

Additionally, Milpitas Municipal Code Section XII-1-3.03 generally requires concurrent construction of the market rate and affordable housing products within a project. The City Council previously approved an exception to this requirement allowing up to 65% of the market rate townhouses to be issues certificates of occupancy prior to beginning construction on the rental units in the tower. To accommodate the delayed construction timeline from the project redesign and the need to secure a new affordable housing developer for the tower, the Applicant is now requesting that the City Council allow the issuance of certificates of occupancy to be issued for up to 85% of the market rate townhouses prior to the foundation for the residential tower being poured with the remainder being issuable after that occurrence.

POLICY ALTERNATIVE(S):

Alternative 1: Deny the applicant's request for a Site Development Amendment.

Pros: By denying the Applicant's request for a Site Development Amendment, the Applicant would be conditioned to develop an apartment building that was previously approved with a design that has already been reviewed and approved by the City Council.

Cons: The Applicant has expressed concerns that the previously approved apartment design cannot be built because the affordable housing developer that proposed the design (Pacific West Communities, Inc.), is no longer able to develop the Project. If the amendment is denied, the current affordable housing developer will be unable to construct the affordable apartments and the Applicant will need to find another affordable housing developer to complete this portion of the Project.

Reason for Not Recommending: The Applicant is proposing a similar project with minor modifications that will increase the affordability previously approved, by reserving 100% of the apartment units to either low or very-low income households.

FISCAL IMPACT:

Economic & Planning Systems, Inc. (EPS) conducted a Fiscal Impact Analysis for the 1355 California Circle Project, which was approved on November 7, 2023. The analysis found the City would financially benefit from the Project, with an annual net positive of $169,000 following full project construction. The proposed modification would not affect the fiscal benefit.

The City has collected over $3.9 million dollars in park-in-lieu fees for the 1355 California Circle Project, which were based on 206 residential units, including the 75 apartment units. If the City does not allow 75 apartment units, the total park-in-lieu fee will need to be recalculated to a lower dollar amount. Furthermore, additional impact fees such as stormwater connection, water connection, sewer connection, wastewater treatment, and the public art fees will need to be recalculated.

CALIFORNIA ENVIRONMENTAL QUALITY ACT (CEQA):

On November 7, 2023, the City Council certified a Final Environmental Impact Report (FEIR) (SCH#2022110251) for the 1355 California Circle Project by holding a duly noticed public hearing on the EIR, presented the Findings of Fact and a Statement of Overriding Consideration, considered all written and oral reports of staff and public testimony on the matter, and such matters are reflected in the record of the matter

and determined that the benefits of the 1355 California Circle Project outweigh its potential significant environmental impact by adopting a Statement of Overriding Consideration.

On September 12, 2024, Pulte Homes applied to modify the development of a 75 residential-unit apartment building that was part of the 1355 California Circle Project. The modified apartment building will be lower in height (65 feet compared to 74 feet) and larger in floor area (84,907 square feet compared to 66,767 square feet), yet the overall building footprint is not substantially changing. The number of units (75 total) will remain the same and one additional parking space (86 total) will be added.

It is for these reasons the proposed Project is exempt pursuant to CEQA Guidelines Section 15162 (Subsequent EIRs and Negative Declaration), which states that when an EIR has been certified or a negative declaration has been adopted for a project, no subsequent EIR shall be prepared for that project unless the lead agency determines, on the basis of substantial evidence in the light of the whole record, that either a substantial change (as described per CEQA Guidelines Section 15162 (a)(1) and (2)) or new information of substantial importance (as described per CEQA Guidelines 15162 (a)(3)(A)(B)(C)) have occurred. No substantial change or no information of substantial importance has been determined based on the analysis of the proposed modification. Attachment (b) is a staff memorandum providing further analysis of the Section 15162 CEQA exemption.

RECOMMENDATION:

(1) Conduct a public hearing.
(2) Adopt a resolution to amend the Site Development Permit and approve a Density Bonus Permit for an apartment building at 1355 California Circle, subject to findings and conditions of approval.

ATTACHMENT(S):

a) City Council Resolution
b) Memorandum
c) Planning Commission Staff Report
d) Planning Commission Meeting Minutes
e) Planning Commission Resolution
f) Project Narrative
g) Project Plans

RESOLUTION NO. _____

A RESOLUTION OF THE CITY COUNCIL OF THE CITY OF MILPITAS APPROVING SITE DEVELOPMENT PERMIT AMENDMENT NO. SA24-0005 AND DENSITY BONUS PERMIT NO. DB24-0002 TO MODIFY A PREVIOUSLY APPROVED 75-UNIT APARTMENT BUILDING, DEVELOP 86 VEHICLE PARKING SPACES, TWO ROOFTOP AMENDITY AREAS, AND ASSOCIATED SITE IMPROVEMENTS WITHIN THE "1355 CALIFORNIA CIRCLE PROJECT" ON A 0.94-ACRE PARCEL AT 1355 CALIFORNIA CIRCLE AND MAKING THE FINDING OF CEQA EXEMPTION

WHEREAS, the City of Milpitas, California (the "City") is a municipal corporation, duly organized under the constitution and laws of the State of California; and

WHEREAS, California Government Code Section 65800 et seq. authorizes the adoption and administration of zoning laws, ordinances, rules, and regulations by cities as a means of implementing the General Plan; and

WHEREAS, Section 3.03 of Chapter 10 Zoning of Title XI of the Milpitas Municipal Code, divides the City into zoning districts; and

WHEREAS, on November 7, 2023, the City Council of the City of Milpitas approved a development of a multi-family residential project consisting of 13 residential buildings, up to 51-feet in height, and one residential apartment building, up to 78-feet in height, for a total of 206 residential units, with 393 vehicle parking spaces, a 0.32-acre internal park, and associated site improvements located at 1355 California Circle ("the 1355 California Circle Project") submitted by Pulte Homes Company LLC ("Applicant"). The approval included the following entitlements:

a. General Plan Text Amendment (GP22-0001): To remove language associated with the California Circle Specific Plan within the General Plan 2040 by amending the Neighborhood Commercial Mixed-Use (NCMU) designation (pg. LU-6), removing the "California Circle Specific Plan Overlay" statement (pg. LU-8) and amending Action LU-2b (pgs. LU-17 and LU-18).

b. Zoning Map Amendment (ZA22-0001): To amend the zoning map to change the property zoning designation from Industrial Park (MP) to Mixed-Use District (MXD).

c. Site Development Permit (SD22-0003) to allow the development of a multi-family residential project consisting of 13 residential buildings, up to 51 feet in height, and one residential apartment building, up to 78 feet in height, for a total of 206 residential units on a 6.7-acre site.

d. Conditional Use Permit (UP22-0001) to allow for condominium use, associated subdivision, and tandem parking.

e. Vesting Tentative Map (MT22-0001) to establish 14 lots, 131 residential condominium spaces, and related common areas.

f. Density Bonus Permit (DB23-0003) to ensure compliance with State Density Bonus law and regulations and grant a modification of the distribution requirement so affordable units can be constructed in the apartment building only.

g. Tree Removal Permit (TR23-0021) to remove 27 ordinance-sized trees and replace them with 269 new trees.

h. Environmental Assessment (EA22-0002: To review and assess all requested entitlements for consistency with the California Environment Quality Act (CEQA).

WHEREAS, in order to evaluate and approve the 1355 California Circle Project under the California Environmental Quality Act ("CEQA," codified at Public Resources Code § 21000, et seq., as further governed by the CEQA Guidelines, found at 14 C.C.R. § 15000, et seq.), an environmental impact report was prepared (the Draft EIR, as revised by the Final EIR's errata section, together with the other sections of the Final EIR, are collectively referred to herein as the "EIR," State Clearinghouse No. 2022110251); and

WHEREAS, on November 7, 2023, the City Council of the City of Milpitas certified the EIR for the 1355 California Circle Project by making environmental findings pursuant to CEQA and adopting a statement of overriding considerations and a mitigation monitoring program; and

WHEREAS, on September 12, 2024, Pulte Homes Company LLC submitted an application to the City of Milpitas to modify the physical elements of the residential apartment building ("Project") previously approved within the 1355 California Circle Project. The Project requires approval of the following entitlements:

a. Site Development Permit Amendment to change the overall design of the previously approved apartment building by lowering the height (from approximately 78 feet and six stories to approximately 65 feet and five stories), increasing the residential floor area (84,097 square feet compared to 66,767 square feet), modifying the unit type (replace 16 studios, 40 one-bedroom units, and 19 two-bedroom units with 30 one-bedroom units, 21 two-bedroom units, and 24 three-bedroom units), increase the number of vehicle parking spaces (from 85 parking spaces to 86 parking spaces) and changing the design, colors, and materials of the apartment building. Additional amendments include encroaching into the front and side yard setback, allowing a building height over 45 feet and a parking reduction, as permitted by State Density Bonus Law through waivers.

b. Density Bonus Permit to ensure compliance with State Density Bonus law and ensure the project eligibility for certain concessions, waivers, and parking incentives under State Density Bonus Law. Furthermore, the application proposed to modify the previous entitlement that reserved 31 apartment units for low-income households and 44 apartment units for moderate-income households (totaling 75 affordable housing units) into reserving all 75 residential units for either low or very low-income households.

WHEREAS, the Project is exempt pursuant to CEQA Guidelines Section 15162 (Subsequent EIRs and Negative Declaration) which is permitted when an EIR has been certified or a negative declaration adopted for a project, and therefore no subsequent EIR shall be prepared so long as the lead agency can demonstrate if changes to a project warrant a subsequent negative declaration, addendum, or no further documentation; and;

WHEREAS, the Planning Department recommends the City Council determine this Project is found to be consistent with the goals, policies, and regulations of the California Density Bonus Law (Government Code Section 65915 et seq.), Milpitas General Plan 2040, and Milpitas Zoning Ordinance, specifically Milpitas Municipal Code Section XI-10-54.15 (Density Bonus for Affordable Housing Developments), which continues to allow an exception of the distribution requirement of affordable units for a project that better serves the affordable housing need in the City and permits waivers and concessions to development standards to facilitate development of the project, as analyzed and documented in the staff report; and

WHEREAS, the Planning Commission is an advisory body to the City Council pursuant to Milpitas Municipal Code Section XI-10-64.03 (Consideration of Concurrent Applications), where, as here, a Density Bonus Permit pursuant to Milpitas Municipal Code Section XI-10-54.15is required, and the City Council is the highest review authority for the Project and, accordingly, all review by other bodies with approval authority over the application shall be in the form of a recommendation to the City Council; and

WHEREAS, on February 12, 2025, the Planning Commission held a duly noticed public hearing, during which meeting the Planning Commission considered the categorial exemption as well as the Site Development Permit Amendment No. SA24-0005 and Density Bonus Permit No. DB24-0002 for 1355 California Circle Modified Apartment Building, heard a presentation from staff; and had the opportunity to hear from members of the public and closed the public hearing on the item; and

WHEREAS, by adoption of Resolution No. 25-003, the Planning Commission recommended that the City Council approve Site Development Permit Amendment SA24-0005 and Density Bonus Permit DB24-0002 for 1355 California Circle Modified Apartment Building; and

WHEREAS, the documents and other materials which constitute the record of proceedings upon which the City Council bases the recommendation and the findings contained within this Resolution are available and may be reviewed at Milpitas City Hall, located at 455 E. Calaveras Boulevard, Milpitas, California 95035; and

WHEREAS, on April 15, 2025, the City Council held a duly noticed public hearing, during which meeting the City Council considered the Site Development Permit Amendment SA24-0005 and Density Bonus Permit DB24-0002 for 1355 California Circle Modified Apartment Building, heard a presentation from staff, and had the opportunity hear from members of the public; and

WHEREAS, the findings and conclusions made by the City Council pursuant to this Resolution are based upon the oral and written evidence before it as a whole; and

WHEREAS, all other legal prerequisites to the adoption of this Resolution have occurred.

NOW, THEREFORE, the City Council of the City of Milpitas hereby finds, determines, and resolves as follows:

SECTION 1. Recitals

The City Council has duly considered the full record before it, which may include but is not limited to such things as the published staff report, oral and written testimony by staff, the Planning Commission, City Council and the public, and other materials and evidence submitted or provided to it. Furthermore, the recitals set forth above are found to be true and correct and are incorporated herein by reference.

SECTION 2. Record

The location and custodian of the documents or other material which constitute the record of proceedings upon which this decision is based is within the Planning Department, City of Milpitas, 455 East Calaveras Boulevard, Milpitas, California 95035

SECTION 3. California Environmental Quality Act (CEQA)

This Project is exempt from further environmental review under the California Environmental Quality Act (CEQA) pursuant to CEQA Guidelines Section 15162 (Subsequent EIRs and Negative Declarations) which states that when a EIR has been certified or a negative declaration has been adopted for a project, no subsequent EIR shall be prepared for the that project unless the lead agency determines, on the basis of substantial evidence in the light of the whole record, that either a substantial change (as described per CEQA Guidelines Section 15162 (a)(1) and (2)) or new information of substantial importance (as described per CEQA Guidelines 15162 (a)(3)(A)(B)(C)) have occurred. No substantial change or no information of substantial importance has been determined based on the analysis of the proposed modification. The previously certified Final Environmental Impact Report (FEIR) (SCH#2022110251) for the 1355 California Circle Project remains a sufficient environmental analysis for the project as amended, and the mitigation measures, including the mitigation monitoring and reporting program therein established, should be adopted as conditions of the project approval.

SECTION 4. Development Fees

The Project is subject to the Parkland Impact Fee and the Public Art Fee. The City Council finds and determines, based upon the full record before it, including studies, analysis, and approvals supporting the adoption of these fees that there is an essential nexus between these fees and the Project and these fees are roughly proportional to the Project's impact on the City's land use and other interests.

The purposed of the Parkland Impact Fee, as adopted on June 15, 1976, by Ordinance No. 18.17 and amended thereafter, is to finance open space for park or recreational purposes as a condition of approval of a subdivision map as contemplated by the Subdivision Map Act. The city

has adopted a General Plan containing a Recreation Element with definite principles and standards for the park and recreational facilities to serve the residents of the city and through this obligation requires dedication of land, payment of a fee, or both to proportionately contribute to this plan and provide park and recreational facilities to serve future residents of such subdivision. The Project will be supported by the infrastructure financed by the Parkland Impact Fee. The Council finds that an essential nexus exists between the basic public infrastructure facilities financed by the fee and the Project, which those facilities will support.

In adopting and updating over time the Parkland Impact Fee, the City relied upon studies to ensure that each project would pay only its fair share of the basic public infrastructure facilities. The City found and determined through this study that the public interest, convenience, health, welfare, and safety require that eighteen and one-half (18-½) acres of property, for each one thousand (1,000) persons residing within this City, be devoted to park and recreational purposes. This fee is made proportionate to the population of each project and the consequent increase in infrastructure for this additional residential need. The land and fees received are used only for the purpose of providing park and recreational facilities to serve the subdivision for which received, and the location of the land and amount of fees bear a reasonable relationship to the use of the park and recreational facilities by the future inhabitants of the subdivision. The Council finds that Parkland Impact Fee is roughly proportional to the Project's impact on the City's land use interest.

The purpose of the Public Art Fee, as adopted on May 19, 2015, by Ordinance No. 38.821, promote the aesthetics and arts in the City of Milpitas by requiring the inclusion of a public artwork component in new private development projects in Milpitas. Developers may either include publicly accessible works of art of placement in the development itself or contribute a Public Art Program In-Lieu Contribution as a condition of project approval. This obligation therefore should foremost provide a direct public infrastructure improvement in the Project itself and only require contribution at the applicant's decision not to install improvements within the Project. The Council finds that an essential nexus exists between the basic public infrastructure facilities financed by the fee and the Project, which those facilities will support.

In adopting the Public Art Fee, the City relied upon studies to ensure that each project would pay only its fair share of the basic public infrastructure facilities. The City found and determined through this study that the public interest, convenience, health, welfare and safety require that private residential building developments of 20 or more new dwelling units shall devote an amount not less than one-half of one percent of Building Development Costs for acquisition and installation of Publicly Accessible Art on the development site. This obligation therefore proportionally requires the developer to contribute proportionately in the first instance to the aesthetics and arts for the Project itself. The Council finds that the Public Art Fee is roughly proportional to the Project's impact on the City's land use interest.

SECTION 5. Site Development Amendment Permit

The City Council makes the following findings based on the evidence in the public record in support of Site Development Permit No. SA24-0005, as referenced as "1355 California Circle Modified Apartment Building," dated November 18, 2024, on file with the Planning Department:

1. *The layout of the site and design of the proposed buildings, structures and landscaping are compatible and aesthetically harmonious with adjacent and surrounding development.*

   The 1355 California Circle Project consists of 131 townhome condominium units and 75 apartment units and associated site amenities on a 6.7-acre site. The proposed modification of the apartment building structure within the 1355 California Circle Project will remain compatible with the townhome condominium design. The previously approved townhome and redesigned apartment building will incorporate contemporary architectural features consistent with residential structures along California Circle. The modified apartment building height will be approximately 65 feet, consistent with the approximately 40 feet tall townhome structures in the immediate area. The modified apartment building maintains a strong relationship to the street in that its primary entrance is oriented toward the street. The building's design features exterior plaster walls, vinyl windows, accented with brick veneer along the ground floor, along with an aluminum storefront system to create an aesthetically harmonious development.

2. *The Project is consistent with the Milpitas Zoning Ordinance.*

   The proposed modification is generally consistent with the Milpitas Zoning Ordinance and MXD zoning standards, as demonstrated in Table 1, below:

Table 1: Summary of MXD Development Standards

Development Standard (MXD)	Minimum Required	Proposed	Conformance
Density	21-30 du/ac	30.8 du/acre (for the 6.7-acre site, as contemplated for the entire project)	Yes, *with Density Bonus*
Front Yard Setback (east)	Minimum of 8 feet and a maximum of 15 feet from back of sidewalk.	4 feet, 9 inches to 13 feet, 7 inches	Yes, *with Density Bonus Waiver*
Side Yard Setback (north)	10 feet	14 feet, 6 inches	Yes
Side Yard Setback (south)	10 feet	4 feet, 5 inches	Yes, *with Density Bonus Waiver*
Rear Yard	10 feet	11 feet	Yes

Development Standard (MXD)	Minimum Required	Proposed	Conformance
Setback (west)			
Height	3 stories and 45 feet	~65 feet	Yes, *with Density Bonus Waiver*
Landscaping	All required front and street setback areas shall be landscaped or paved to allow for outdoor seating, display or goods, or street furniture	All required front and street setback areas are landscaped or paved	Yes
Parking	1 bedroom: 1.5 per unit (45 spaces) 2-3 bedrooms: 2 per unit (90 spaces) Guest: Projects with parking structures: 15 percent of the total required. (20 spaces) **Total – 155 spaces**	86 spaces	Yes, *with Density Bonus Parking Reduction Incentive*
Bicycle Parking	5 percent of the total required Total: 8	8	Yes

The proposed multi-family residential building is permitted in the MXD zoning district. The project design conforms to the site and development standards of the MXD zone. The apartment modification also conforms with MMC Section XI-10-54.015 (Density Bonus for Affordable Housing Developments) and XI-10-57.05 (Density Bonus Permits). Where exceptions from the MXD standards are needed, the applicant has requested waivers and parking exceptions pursuant to the State Density Bonus Law (Gov. Code § 65915 et seq.). The requested waivers and parking exception will support the development of affordable housing on a site where it would not otherwise be possible through a strict application of the specified zoning standard.

3. The Project is consistent with the Milpitas General Plan

The proposed Project is consistent with the Milpitas General Plan as demonstrated and outlined in Table 2, below:

Table 2: General Plan Consistency

Policy	Conformance
Policy LU 1-4: *Continue to provide for a variety of housing types and densities that meet the needs of individuals and families and offer residents of all income levels, age groups, and special needs sufficient housing opportunities and choices for locating in Milpitas.*	**Consistent.** The development includes a total of 206 new housing units, with 75 of those units within the previously approved apartment building. All 75 units would be rental units and offered at a below-market rate. The Project Applicant would allow Milpitas Unified School District Employees (MUSD) first right of refusal for the 75 apartment units, consistent with City policy to provide a variety of housing types for individuals and families of all types of income.
Policy LU 4-4: *Encourage new development to facilitate pedestrian, bicycle and transit access through techniques such as minimizing building separation from public sidewalks; providing safe, direct, accessible, convenient, and pleasant pedestrian connections; including secure and convenient bike storage; and orienting building entrances to transit service.*	**Consistent**. Approving the proposed apartment modification would not impact the investment into pedestrian, bicycle and transit access. The developer has designed the project to maintain the existing sidewalks and develop interior walkways to support pedestrian travel. Bicycle parking will also be developed and bicycle storage areas have been identified in the modified apartment building. Lastly, a pedestrian crosswalk across California Circle will remain, providing pedestrian access to nearby walking trails and a future public park within the new development.
Policy LU 2-3: *Allow densities and intensities which exceed the generally allowed ranges defined by the underlying land use for projects utilizing Density Bonus provisions (included within the Milpitas Affordable Housing Ordinance Title XII - HOUSING Chapter 1 - AFFORDABLE HOUSING ORDINANCE) including bonuses for senior housing, affordable housing, and for projects within designated overlay districts included in Milpitas Municipal Code Section 12 - Overlay Districts and Standards*	**Consistent.** The apartment modification includes a proposal to provide all 75 residential units to either low or very-low-income individuals or families, consistent with the GP policy to support density bonuses for affordable housing.

Furthermore, as the Project is an eligible housing project under State Density Bonus Law, Government Code Section 65915(p)(5), the Project is entitled to waivers, concessions and incentives. The requested waivers and parking incentives will support the development of affordable housing units on a site where it would not otherwise be possible through a strict application of the specific standard.

SECTION 6. Density Bonus Permit

The City Council makes the following findings based on the evidence in the public record in support of Density Bonus Permit No. DB24-0002, as referenced as 1355 California Circle Modified Apartment," dated November 18, 2024, on file with the Planning Department:

1. *The maximum allowable base density specified in the General Plan, including any other permitted increases in density*

   The previously approved development includes 131 townhome condominiums and 75 apartment units, equaling to 30.8 dwelling units per acre, meeting the General Plan density allowed the NCMU land use designation. The proposed modification will not affect the total number of units or density.

2. *All affordable units shall be reasonably dispersed throughout the project, shall contain on average the same number of bedrooms as the non-affordable units in the project, and shall be comparable with the non-affordable units in terms of appearance, materials and finished quality. The Planning Commission may recommend to the City Council and/or Redevelopment Agency modifying the requirements as to unit size or type, if it is found that such a modification would better serve the affordable housing need of Milpitas.*

   The previously approved development received an exception to this standard. Instead of providing 19 affordable townhome condominiums and 11 affordable apartment unit (15 percent of the total number of dwelling units), the applicant reserved 31 apartment units for lower-income households and 44 apartment units for moderate-income households, bringing the total BMR contribution to 36.4 percent of the total number of dwelling units, adding 44 additional deed restricted units to it's the City of Milpitas's affordable housing stock and helping the City meet its Regional Housing Needs Allowance (RHNA). The proposed modification will reserve all 75 apartment units to either low or very low-income households, further increasing the affordable housing stock to all income level households. Furthermore, the developer has committed to working with Milpitas Unified School District to market housing opportunities for their employees.

3. *Prior to final building inspection and occupancy for a project containing affordable units, the applicant shall execute and record at the Santa Clara County Recorder's Office the City's Agreement Imposing Restrictions on Real Property, which Agreement shall explain the affordability requirements. The agreement shall be approved by the Milpitas City Attorney prior to recordation.*

The Project has been conditioned to provide an agreement to the City of Milpitas explaining the affordability requirements, processes and procedures, to the satisfaction of the Milpitas City Attorney prior to the release of any Certificate of Occupancy.

4. *Retaining Affordability. A developer shall agree to, and the City shall insure continued affordability of, all lower- or very low-income density bonus units for thirty (30) years or a longer period of time, if required by the construction or mortgage financing assistance program, mortgage insurance program, or rental subsidy program.*

   Prior to final building inspection and occupancy for the modified apartment building, the applicant shall execute and record at the Santa Clara County Recorder's Office the City's Agreement Imposing Restrictions on Real Property, which Agreement shall explain the affordability requirements, including continued affordability for low and very low-income households. The agreement shall be approved by the Milpitas City Attorney prior to recordation.

5. *Affordable Rents. Those units targeted for lower-income households, as defined in Section 50079.5 of the Health and Safety Code shall be affordable at a rent that does not exceed thirty (30%) of sixty (60%) percent of the Santa Clara County median income. Those units targeted for very low-income households, as defined in Section 50105 of the Health and Safety Code, shall be affordable at a rent that does not exceed thirty (30%) of fifty (50%) percent of County median income.*

   All 75 apartment units will be targeted to either low or very low income households, as defined in Section 50079.5 of the Health and Safety Code, which states that lower-income households shall be affordable at a rent that does not exceed thirty (30%) of sixty (60%) percent of the Santa Clara County median income and units targeted to very low-income households, as defined in Section 50105 of the Health and Safety Code, shall be affordable at a rent that does not exceed thirty (30%) of fifty (50%) percent of County median income.

6. *Relation to Statute. Density bonus requirements not specified in these regulations shall be governed by the State Density Bonus Law, Government Code section 65915, et seq.*

   Any density bonus requirements not specified in the City's Municipal Code shall be governed by the State Density Bonus Law, Government Code Section 65915, et seq.

   Density Bonus Concessions, Incentives and Waivers

   In accordance with California Government Code Section 65915 and MMC Section X-10-54.15, the City must grant the requested incentives/concessions unless the City can make either of the following findings in writing and based on substantial evidence:

   a. *The concession is not required in order to provide for affordable housing costs as defined in State Health and Safety Section 50052.2 or for rents for the affordable units pursuant to Section XI-10-54.15(D)(5), Standards, of Chapter 10 (Zoning) of the Milpitas Municipal Code.*

b. *The concession would have a specific adverse impact as defined in State Government Code Section 65589.5(d) (2) upon the public health and safety or the physical environment, or on any real property that is listed in the California Register of Historical Resources and for which there is no feasible method to satisfactorily mitigate or avoid the specific adverse impact without rendering the development unaffordable to low- and moderate-income households*

If findings cannot be made, then the proposed concessions/incentives and waivers must be granted, based on the requirements of the City's Municipal Code and California Government Code Sections 65915 – 65918.

The City does not have substantial evidence to demonstrate that the concessions/incentives and waivers described in Table 3, below, would fail to result in actual and identifiable cost savings, and/or that these savings are unnecessary to provide the level of affordability proposed. Moreover, the City has no substantial evidence that any of the requested concessions, incentives or waivers would result in any specific, adverse impacts to public health, safety, the physical environment, or historical resources. Accordingly, the City Council hereby approves such requested concessions/incentives and waivers.

Table 3: State Density Bonus – Concessions, Waivers and Incentives

Type of Modification	Standard	Applicant Request	Justification	Waiver Previously Requested	Discretion
Waiver for Front Setback	Minimum 8 feet, Maximum 15 feet	4 feet, 9 inches to 13 feet, 7 inches	A lesser front yard setback provides the developer greater floor area to increase affordable units on-site.	Yes	This waiver is allowed under State Density Bonus Law and must be granted by the city.

Type of Modification	Standard	Applicant Request	Justification	Waiver Previously Requested	Discretion
Waiver for Side Setback	10 feet	4 feet, 5 inches	The reduced side setback is needed to comply with Fire requirements for adequate space to maneuver aerial apparatus along the northern property line.	No	This waiver is allowed under State Density Bonus Law and must be granted by the city.
Waiver for Building Height	3 stories and 45 feet	5 stories and 65 feet	A greater height provides the developer more floor area to increase affordable units on-site.	Yes	This waiver is allowed under State Density Bonus Law and must be granted by the city.
Parking Reduction Incentive	155 spaces (Pursuant to MMC Section XI-10-53.09)	86 spaces	State Density Bonus Law dictates minimum parking standards for qualifying affordable housing developments.	Yes	This parking reduction is allowed under State Density Bonus Law and must be granted by the city.

SECTION 7. Affordable Housing Ordinance Exception

The City Council may allow an exception to the requirement to construct on-site affordable units for a residential ownership project when the applicant contributes to the City's affordable housing needs through one of the alternatives set forth in MMC Sections XII-1-4.00-XII-1-4.02,

provided that prior to City Council approval to the requested exception, the City Council must make the following findings:

1. *The development as proposed with the exception as provided pursuant to this Section would further the City's low and/or moderate-income housing goals as contained in the Housing Element; and*

   In order to comply with this section, the ordinance requires the Project to provide 19 townhomes, as moderate-income, and 11 apartment units, as low-income, for affordable housing, for a total of 31 affordable housing units. The applicant proposes to deviate from the ordinance and meet the City's affordable housing requirement by not reserving any townhome units but reserving 75 apartment units for either low or very low-income households, exceeding the 15 percent requirement of the total number of dwelling units. By granting this exception, the City would add 75 affordable housing units into the Milpitas housing stock which supports the City's RHNA obligation.

2. *The development with the exception either (i) will result in at least two of the following:*

   a) The development of a larger number of deed-restricted affordable units than would be created under the on-site requirement;
   b) The development of a larger number of deed-restricted affordable bedrooms than would be created under the on-site requirement;
   c) The development of a larger amount of deed restricted affordable living area than would be created under the on-site requirement;
   d) The development of deed-restricted affordable units at a lower average income target as compared to the affordable units that would be created under the on-site requirement;

   or (ii) will provide other community benefits that exceed the benefit of constructing on-site affordable units.

   The proposed development, with the exception, will result in a larger number of deed-restricted affordable bedrooms and a larger amount of deed-restricted affordable living area than would be created under the on-site requirement. The total number of bedrooms under the applicant's modification would be 144, whereas the required number would be 74 bedrooms. The total square footage of living space under the applicant's modification would be 61,250, whereas the required amount of living space would be 41,548 square feet. Lastly, the developer has committed to working with Milpitas Unified School District to provide housing opportunities for their employees.

SECTION 8. Severability

If any section, subsection, sentence, clause, phrase, or portion of this Resolution is for any reason held incorrect, invalid, illegal, or unenforceable, such decision shall not affect the validity of the remaining portions of this Resolution. The City Council hereby declares that it would have passed each section, subsection, phrase, or clause thereof irrespective of the fact that any one or

more sections, subsections, phrases or clauses be declared incorrect, invalid, illegal, or unenforceable.

SECTION 9. City Council Approval

The City Council hereby approves Site Development Permit Amendment No. SD24-0005 and Density Bonus Permit No. DB24-0002 (subject to the Conditions of Approval attached hereto and incorporated herein as **Exhibit "1"**) based on the above findings.

PASSED AND ADOPTED this _____ day of _____ 2025, by the following vote:

AYES:

NOES:

ABSENT:

ABSTAIN:

ATTEST:

_____

Suzanne Guzzetta, City Clerk

APPROVED:

_____

Carmen Montano, Mayor

APPROVED AS TO FORM:

_____

Christopher Creech, Acting City Attorney

EXHIBIT '1'

CONDITIONS OF APPROVAL

PULTE HOMES AFFORDABLE APARTMENTS MODIFICATION, WHICH INCLUDES THE DEVELOPMENT OF A U-SHAPED, MODERN ARCHITECTURAL APARMENT BUILDING, APPROXIMATELY 65 FEET (FIVE-STORIES) IN HEIGHT, A UNIT MIX OF 30 ONE-BEDROOM UNITS, 21 TWO-BEDROOM UNITS, AND 24 THREE-BEDROOM UNITS (TOTALING 75 UNITS) RANGING IN SIZE BETWEEN 600 TO 1,043 SQUARE FEET, WITH 86 VEHICLE PARKING SPACES, AND ALL UNITS DESIGNATED FOR EITHER LOW (51-80 PERCENT AREA MEDIAN INCOME) OR VERY LOW-INCOME (31-50 PERCENT AREA MEDIAN INCOME) HOUSEHOLDS

SITE DEVELOPMENT AMENDMENT PERMIT NO. SA24-0005
DENSITY BONUS PERMIT NO. DB24-0002

GENERAL CONDITIONS

1. General Compliance: The Permittee and owner, including all successors in interest (collectively "Permittee") shall comply with each and every condition set forth in this Permit known as "1355 California Circle Modified Apartment", dated November 18, 2024, on file with the Planning Department and all conditions within **Resolution #9283 (Exhibit '2')**. This **Site Development Amendment Permit No. SA24-0005 and Density Bonus Permit No. DB24-0002** (collectively "Permit") shall have no force or effect, and no building permit shall be issued for the apartment building, unless and until all things required by the below-enumerated precedent conditions have been performed or caused to be performed. The Permittee shall develop the site in accordance with the approved Attachments and as modified by these Conditions of Approval, and in compliance with the 1355 California Circle Project Mitigation Monitoring Plan (MMP), as demonstrated in the 1355 California Circle Project FEIR.

2. Effective Date: Unless there is a timely appeal filed in accordance with the Milpitas Zoning Code, the date of approval of this Permit is the date on which the City Council approved this Permit.

3. Acceptance of Permit: Should Permittee fail to file a timely appeal within twelve (12) calendar days of the date of approval of this Permit, inaction by Permittee shall be deemed to constitute each of the following:
    a. Acceptance of this Permit by Permittee; and
    b. Agreement by the Permittee to be bound by, comply with, and to do all things required of or by Permittee pursuant to all of the terms, obligations, and conditions of this Permit.

4. Permit Expiration: Pursuant to Section XI-10-64-06 of the Milpitas Municipal Code, this Permit shall become null and void if the activity permitted by this Permit is not commenced

within two (2) years from the date of approval, or for a project submitted with a tentative map, within the time limits of the approved tentative map. Pursuant to Section XI-10-64.06(B) of the Milpitas Municipal Code, an activity permitted by this Permit shall be deemed to have commenced when the Project:

a. Completes a foundation associated with the Project; or
b. Dedicates any land or easement as required from the zoning action; or
c. Complies with all legal requirements necessary to commence the use, or obtains an occupancy permit, whichever is sooner.

5. Time Extension: Pursuant to Section XI-10-64.07 of the Milpitas Municipal Code, unless otherwise provided by State law, Permittee shall have the right to request a one-time extension of the Permit if the request is made in writing to the Planning Division prior to the expiration date of the approval. **(P)**

6. Project Job Account: If Permittee's project job account is at any time delinquent or below the required deposit amount, City will not continue to review or process the application until Permittee's project job account is paid in full and the required deposit has been made. Additionally, prior to the issuance of any building permit or occupancy permit as applicable, Permittee shall pay in full the Project account balance and establish a remaining balance of at least twenty-five percent (25%) of the required initial deposit. **(P/E)**

7. Notice: Pursuant to California Government Code Section 66020, any protest filed in court relating to the imposition of fees, dedication, reservations, or other exactions to be imposed on the development project shall be filed within ninety (90) days after the date of the adoption of this Resolution. This provision serves as notice from the local agency to the Permittee that the ninety (90) day period in which the Permittee may file a protest has begun under California Government Code Section 66020(d)(1).

8. Cost and Approval: Permittee shall fully complete and satisfy each and every condition set forth in this Resolution and any other condition applicable to the Project to the sole satisfaction of the City. Additionally, Permittee shall be solely responsible and liable for the cost to satisfy each and every condition. **(ALL)**

9. Conditions: Each and every condition set forth in this Exhibit shall apply to the Project and continue to apply to the Project so long as the Project is operating under the permits and approvals in this Resolution. **(ALL)**

10. Compliance with Laws: The construction, use, and all related activity authorized under this Permit shall comply with all applicable local, state and federal laws, rules, regulations, guidelines, requirements and policies. **(CAO/P/E/B)**

11. Indemnification: To the fullest extent permitted by law, Permittee shall indemnify, defend with counsel of the City's choosing, and hold harmless City, its City Council, its boards and commissions, officials, officers, employees and agents from and against any and all claims, demands, obligations, damages, actions, causes of action, suits, losses, judgments, fines, penalties, liabilities, costs and expenses (including without limitation, attorney's fees,

disbursements and court costs) of every kind and nature whatsoever which may arise from or in any manner relate (directly or indirectly) to (i) City's approval of the project, including, but not limited to, the approval of the discretionary permits, the approval of any waivers, exemptions, alternatives, modifications, or amendments to the City's General Plan or Municipal Code, maps under the Subdivision Map Act, and/or the City's related determinations or actions under the California Environmental Quality Act, and (ii) Permittee's construction, operation, use or related activity under this Permit. This indemnification shall include, but not be limited to, damages awarded against the City, if any, costs of suit, attorneys' fees, and other expenses incurred in connection with such claim, action, causes of action, suit or proceeding whether incurred by Permittee, City and/or the parties initiating or bringing such proceeding. Permittee shall indemnify the City for all of City's costs, attorneys' fees and damages, which City incurs in enforcing the indemnification provisions set forth in this condition. Permittee shall pay to the City upon demand or, as applicable, to counsel of City's choosing, any amount owed pursuant to the indemnification requirements prescribed in this condition. The above indemnification is intended to be as broad as permitted by applicable law. To the extent the above indemnification is limited by Government Code Section 66474.9, any limitations shall only apply to Vesting Tentative Map No. MT22-0002 (approved on November 7, 2023), and the balance of the Permit shall be unaffected by Government Code Section 66474.9.

12. Certificate of Insurance: Permittee shall provide certificate of insurance and name City as an additional insured in its insurance policies for the Project.

13. Revocation, Suspension, Modification: This Permit may be suspended, revoked or modified in accordance with Section XI-10-63.06 of the Milpitas Municipal Code.

14. Severability: If any term, provision, or condition of this Permit is held to be illegal or unenforceable by the Court, such term, provision or condition shall be severed and shall be inoperative, and the remainder of this Permit shall remain operative, binding and fully enforceable.

15. Response to Conditions of Approval: Permittee shall provide a written response to comments upon submittal for building permit application. The responses should clearly indicate how each condition of approval has been addressed in the plans and shall note the appropriate plan sheet. **(P)**

16. Compliance with Fire Department and California Fire Code: The project shall comply with the requirements of the Milpitas Fire Department and the California Fire Code, as adopted by the City. Changes to the site plan and/or buildings requires review and re-approval by the Fire Department. **(F)**

17. Compliance with Building Department and California Building Code: The project shall comply with the requirements of the Milpitas Building Department and the California Building Code, as adopted by the City. Changes to the site plan and/or buildings requires review and re-approval by the Building Department. **(B)**

18. Development in Conformance with Approved Plans: Permittee shall develop the approved Project in conformance with the plans dated November 18, 2024 and approved by the City Council on April 15, 2025, in accordance with these Conditions of Approval. Any deviation from the approved site plan, elevations, materials, colors, landscape plan or other approved submittal shall require that, prior to the issuance of building permits, the Permittee shall submit modified plans and any other applicable materials as required by the City for review, and obtain the approval of the Planning Director or Designee. If the Planning Director or designee determines that the deviation is significant, the owner or designee shall be required to apply for review and obtain approval of the Planning Commission or City Council, as applicable, in accordance with the Milpitas Zoning Code. **(P)**

PLANNING CONDITIONS

19. Landscape: All approved landscaping shall be permanently maintained and replaced with substantially similar plant material as necessary to provide a permanent, attractive and effective appearance.

20. Parking: Parking shall be provided as depicted on the Site Plan approved by the City Council and shall consist of the following:

    a. RESIDENT: A total of 348 vehicle spaces within unit parking garages in both the townhome buildings and the podium building.
    b. GUEST: A total of 46 vehicle spaces are to be provided on site.

21. Bicycle Racks: A total of 22 short-term bicycle parking spaces shall be installed on the site.

22. Trees: The project will remove 27 ordinance-sized trees and replace with approximately 269 trees, in conformance with the plans approved by City Council on November 7, 2023.

23. Public Art Requirement: Permittee shall comply with the City's Public Art Requirements for Private Development, as set forth in Milpitas Municipal Code Section XI-10-14. Fee shall be no less than one-half of one percent of building development costs and shall be payable at time of building permit issuance.

24. Density Bonus: Permittee shall provide up to 206 residential units, 75 of which will be reserved for either low or very low-income households. Along with the waivers, concessions, and incentives approved on November 7, 2023, by City Council, the Project may have the following waivers, concessions and incentives:
    a. Waiver #1: Allow a 4-foot-9-inch front setback for the podium apartment building.
    b. Waiver #2: Allow a 4-foot-5-inch side yard setback for the podium apartment building.
    c. Waiver #3: Allow building height up to 65 feet.
    d. Parking reduction waiver: Provide a total of 86 parking spaces in the podium.

HOUSING CONDITIONS

25. Affordable Housing Requirement: Permittee shall comply with the City's Affordable Housing Ordinance, as set forth in Milpitas Municipal Code Section XI-1-3.00. The City Council has granted the following deviation from the City's AHO **(H)**:

    a. Permittee shall reserve 75 apartment units for either low or very low-income households consisting of
        i. 30 one-bedroom units
        ii. 21 two-bedroom units
        iii. 24 three-bedroom units

    b. Milpitas Municipal Code Section XII-1-3.03 requires concurrent construction of both the for sale and rental product types, shall not be applicable. Permittee agrees to diligently pursue an affordable builder, acceptable to the City of Milpitas, who will expeditiously construct the rental portion of the Project. Permittee will be limited to 85% of its units (111 units) receiving Certificates of Occupancy (or Final Planning inspection sign off), before a building permit has been issued and construction has begun on the Below Market Rate (rental product) site. At such time of the rental product has completed the first foundation pour, the remaining 15% of the Permittee's units (20 units) shall be eligible for release for Certificates of Occupancy (or Final Planning inspection sign off).

26. Affordable Housing Agreement: Prior to final building inspection and occupancy for a project containing affordable units, the applicant shall execute and record at the Santa Clara County Recorder's Office the City's Agreement Imposing Restrictions on Real Property, which Agreement shall explain the affordability requirements. The agreement shall be approved by the Milpitas City Attorney prior to recordation. **(H)**

27. Retaining Affordability. Developer shall agree to, and the City shall insure continued affordability of, all lower- or very low-income density bonus units for fifty (50) years or a longer period of time, if required by the construction or mortgage financing assistance program, mortgage insurance program, or rental subsidy program. **(H)**

ENGINEERING CONDITIONS

PRIOR TO CONSTRUCTION PLAN SUBMITTALS

*The following conditions shall be met **prior to** any detailed construction plan check submittals (Building or Engineering, except demolition and rough grade plans), unless otherwise approved by the Director of Engineering/City Engineer. City reserves the right to reject any plan check submittal if any of the following conditions are not met. **(E)***

28. Modifications: The Site Development Plan dated November 18, 2024 is subject to change during the plan check stage based upon City's previous comments and conditions stated herein.

29. Solid Waste and Recycling Handling Plan: Permittee shall submit final Solid Waste and Recycling Handling Plan based upon City's previous comments for City's review and approval by the Engineering Department Solid Waste Program. The subject Plan shall show calculations

of waste generation volumes and how materials will be transferred from the waste generation areas to the trash enclosure/external collection point; demonstrate how recycling, food waste, and yard trimmings shall have a separately maintained process from garbage handling; address other requirements such as waste generation and compactor sizing, chute shut-off and property management responsibility for bin management and litter control; outreach and education to tenants/occupants, and procure sufficient service frequency based upon waste generation calculation volumes.

30. Stormwater Control Plan: Permittee shall submit City approved final Stormwater Control Plan (SWCP) that complies with the latest Municipal Regional Stormwater NPDES Permit, including Low Impact Development (LID) Section C3.c.i.(2)(b) measures for harvesting and reuse, infiltration, or evapo-transpiration, for City's review and approval by the Engineering Department.

31. Photometric Analysis: Permittee shall submit streetlight photometric analysis for City's review and approval by the Engineering Department along California Circle that meet the Illuminating Engineering Society of North America (IESNA), RP8, for roadway and sidewalk lighting standards and City standard design guidelines.

32. Submittal Requirements: Permittee to ensure that all plan check submittals are in accordance with City's submittal check list for each permit type, including but not limited to, payment of permit fees and/or fee deposit at the time of the submittal.

33. Project Job Account/Fee Deposit: Permittee shall open a new PJ account as a deposit to cover the costs for Engineering Department's services for review and inspection of the project. The amount shall be determined based on the public improvement cost estimates as prepared by the Permittee's engineer.

34. Fair Share Payment Structure: Permittee shall negotiate a fair share payment structure with the City regarding the cost associated with the installation of sectional liners on the existing City sanitary sewer main along the California Circle project frontage.

PRIOR TO FINAL MAP APPROVAL/RECORDATION

The following conditions shall be addressed during the final map plan check process and shall be met ***prior to*** *any final approval/recordation (except demolition permit and rough grade permit), unless otherwise approved by the Director of Engineering/City Engineer.* ***(E)***

35. Dedication on the Final Map: Permittee shall dedicate necessary emergency vehicle access easements, public service utility easements, street easements, public access easement and other public easements deemed necessary for the project.

36. Abandonment/Quitclaim Easements: Permittee shall abandon/quit claim existing easements that are in conflict with or unnecessary for the project.

37. Easements on the Final Map: Permittee shall depict all existing easements to remain based upon current preliminary title report and depict new easements on the final map.

38. Concurrent Off-site Plan Reviews: Permittee shall submit separate off-site improvement plans for City's review and approval by the Engineering Department.

39. Street Name Approval: Permittee shall obtain approval from the City Council for all new street names based upon recommendation from the City Council Ad Hoc Naming Subcommittee and City guidelines.

40. Utility Company Approval Permittee shall obtain approval letters from utility companies (PG&E, AT&T, Comcast) for abandonment of existing and dedication of new public service utilities easements.

41. Demolition of Existing Building: Permittee shall demolish existing buildings/facilities that are in conflict with the new property lines.

42. Covenant, Conditions & Restrictions (CC&Rs): Permittee shall provide CC&Rs for City's review and approval for perpetual maintenance of private roadways, private utilities, stormwater management facilities in accordance with a separately recorded Stormwater Management Facilities Operation and Maintenance Agreement, etc.

43. Subdivision Improvement Agreement and Securities: Permittee shall execute a Subdivision Improvement Agreement and provide improvement securities in accordance with MMC Title XI, Section 17, and submit all other supplemental documents as stipulated in the Improvement Agreement (such as certificate of insurance.

44. Annexation to the Community Facilities District: Permittee shall submit an executed petition affirmatively consenting to annex the subject property to the Community Facilities District (CFD) 2005-1, and agree to pay the special taxes levied by the CFD 2005-1 for the purpose of maintaining the public services. The CFD annexation process shall be completed prior to final map approval. Permittee shall comply with all rules, regulations, policies and practices established by the State Law and/or by the City with respect to the CFD including, without limitation, requirements for notice and disclosure to future owners and/or residents. This condition of approval is nonseverable from the Permit and invalidation or limitation of this condition invalidates the Permit, condition 42 notwithstanding.

PRIOR TO OFF-SITE PLAN APPROVAL/ENCROACHMENT PERMIT ISSUANCE

The following conditions shall be addressed as part of the off-site improvement plan review and shall be met ***prior to*** *encroachment permit issuance, unless otherwise approved by the Director of Engineering/City Engineer.* ***(E)***

45. Public Improvement Design Standards: All public improvements shall be designed and constructed in accordance with all applicable public improvement design standards, including but not limited to:
    a. Milpitas Design Guidelines: (http://www.ci.milpitas.ca.gov/milpitas/departments/engineering/design-guidelines/);

b. Standard details and specifications: (http://www.ci.milpitas.ca.gov/milpitas/departments/engineering/standard-details-and-specifications/);
c. Americans with Disabilities Act (ADA) requirements, where applicable.

46. Sanitary Sewer Calculations: Permittee shall submit a completed "Sewer Needs Questionnaire" form and sanitary sewer calculations to justify lateral size design, allocation of discharge for each of the lateral, and impact to the existing main. Permittee shall be responsible to implement any necessary improvements if there is any identified deficiency to the existing main as a result of the project.

47. Storm Drain Design: Permittee shall submit storm drain hydrology and hydraulic calculations based upon a 10-year storm event to justify the size of the storm drain lateral flowing full, without surcharging the main line pipe, and to be reviewed and approved by the Engineering Department.

48. Domestic Water and Fire Service Calculations: Permittee shall submit potable water and fire service calculations to confirm adequacy of lateral size, pressure and flow, to be reviewed and approved by the Engineering Department and Fire Department. Hydraulic modeling analysis by the City and paid by the Permittee may be required as needed. Permittee shall be responsible to implement any necessary improvements if there is any identified deficiency to the existing main as a result of the project.

49. Specific Improvements: In addition to standard public improvements required under Milpitas Municipal Code (MMC) Title XI, Chapter 1, Section 7, Permittee shall install other specific improvements listed below including incidental improvements as required by the City as part of the encroachment permit.

a) Installation of public (City-maintained) water and sewer mains within on-site private streets and public easements. Please ensure all horizontal and vertical separations meet the CCR title 22 requirements.
b) Installation of separate utility service laterals (domestic water, fire service, sanitary sewer) for each residential building at minimum.
c) Installation of irrigation water and storm drain utility service laterals for the common-green condominium community.
d) Installation of domestic water, irrigation water, fire service, sanitary sewer, and storm drainage utility service laterals for the apartment building parcel.
e) Installation of sectional liners on the existing City sanitary sewer main along the California Circle project frontage, development in accordance with the City of Milpitas Sewer Master Plan's recommended capital improvements for California Circle. The fair share payment structure for the sectional liner installation work will be determined prior to the issuance of the building permit.
f) Installation of radio-transmitted water meters with a meter antenna, any repeaters or transmitters as needed with dedicated power supplies at no cost to the City at locations acceptable to the City to ensure accurate and timely reception of meter readings. Permittee shall execute a recorded instrument providing dedicated space,

access rights and dedicated power supplies to the City for operation/maintenance/repair/replacement of subject radio antenna.

g) Installation of sidewalk improvements along the project street frontage on California Circle. All sidewalk design shall comply with applicable City standards and details.

h) Installation of new public streetlights along the project frontage. The locations and spacing of streetlights shall comply with applicable City standards and details. The developer shall procure an extra street light pole and deliver to the Public Works Corporation Yard for storage.

i) Installation of new public streetlights along the project frontage. The locations and spacing of streetlights shall comply with applicable City standards and details. The developer shall procure an extra street light pole and deliver to the Public Works Corporation Yard for storage.

j) AC Pavement base repair, microsurfacing and pavement restriping the full width of California Circle frontage to the satisfaction of the City Engineer.

50. Abandonment of Existing City Utilities: Permittee shall cap, abandon or remove any unused existing public utilities based upon City's Abandonment Notes and to the City's satisfaction.

51. Relocation and Adjustment of Existing Public Utilities: Permittee shall relocate and/or adjust existing public utilities as needed that are in conflict with the proposed improvements.

52. Water Service Agreement: Permittee shall complete a water service agreement to obtain water service.

53. Encroachment Permit: Prior to any work in the public right-of-way and/or public easement, obtain an encroachment permit with insurance requirements for all public improvements including a traffic control plan per the latest California Manual on Uniform Traffic Control Devices (MUTCD) standards to be reviewed and approved by the Engineering Department.

54. Pothole Encroachment Permit: Due to multiple new utility service connections along the project frontage, Permittee shall pothole and verify all potential utility crossing conflict as part of the public improvement plan during the design stage.

PRIOR TO BUILDING PERMIT ISSUANCE

The following conditions shall be addressed during the building plan check process and shall be met ***prior to*** *any building permit issuance (except demolition permit and rough grade permit), unless otherwise approved by the Director of Engineering/City Engineer).* ***(E)***

55. Final Map Recordation: Permittee shall record the final map.

56. Easements on the Building Permit Plans: Permittee shall depict all existing easements to remain based upon current preliminary title report and depict new easements on applicable building permit plans.

57. Stormwater Facility Operation & Maintenance Plan: Permittee shall incorporate design details into applicable construction plans in accordance with City approved Storm Water Control Plan

(SWCP). Permittee shall also submit Stormwater Facility Operation & Maintenance Plan that describes operation and maintenance procedures needed to ensure that treatment Best Management Practices (BMPs) and other storm water control measures continue to work as intended and do not create a nuisance (including vector control).

58. Stormwater Management Facilities O&M Agreement: Permittee shall execute and record a Stormwater Management Facilities Operation and Maintenance (O&M) Agreement associated with the SWCP O&M Plan, including perpetual maintenance of treatment areas/units, as reviewed and accepted by the Engineering Department. The subject O&M Agreement shall be referenced in the CC&Rs, if applicable.

59. NPDES Compliance: The project shall comply with the requirements of the National Pollution Elimination Discharge System (NPDES) permit as administered by the California State Water Resources Control Board and the San Francisco Bay Regional Water Quality Control Board. The project is required to meet the performance standards within the permit. Specifically the project shall incorporate, at a minimum, stormwater treatment measures that meet the numeric sizing requirements for pollutant removal.

60. Water Supply and Force Majeure: The City reserves the right to suspend the issuance of building permits in case of an emergency declaration of water supply in the case of a major catastrophic event that restricts City's assurance to provide water supply.

61. Water Efficient Landscapes: Permittee shall comply with Milpitas Municipal Code Title VIII, Chapter 5 (Water Efficient Landscapes) for landscape design, including but not limited to, providing separate water meters for domestic water service and irrigation service and providing applicable landscape documentation package.

62. Solid Waste and Recycling Facility Design: Permittee shall comply with all applicable City design guidelines/details associated with haul route, turning radius, vertical and horizontal clearance, trash enclosure, staging area, storage area, etc. As Milpitas residents of residential units with individual cart services can request 96-gallon carts, the staging and storage areas of all units of the common-green condominium community shall be designed to accommodate 96-gallon carts.

63. Recycling Report Prior to Demolition Permit Issuance: Permittee shall submit Part I of a Recycling Report on business letterhead to the Building Department, for forwarding to the Engineering Department for review and approval. The report shall describe the following resource recovery activities:
    a. What materials will be salvaged.
    b. How materials will be processed during demolition.
    c. Intended locations or businesses for reuse or recycling.
    d. Quantity estimates in tons (both recyclable and for landfill disposal). Estimates for recycling and disposal tonnage amounts by material type shall be included as separate items in all reports to the Building Division before demolition begins.

    Permittee shall make every effort to salvage materials for reuse and recycling, and shall comply with the City's demolition and construction debris recycling ordinance.

64. Recycling Report Prior to Building Permit Issuance: Permittee shall submit Part II of the Recycling Report to the Building Department, for forwarding to the Engineering Department. Part II of the Recycling Report shall be supported by copies of weight tags and/or receipts of "end dumps." Actual reuse, recycling and disposal tonnage amounts (and estimates for "end dumps") shall be submitted to the Building Department for approval by the Engineering Department prior to inspection by the Building Department.

65. Flood Plain Management: This project is in the Flood Zone "AH" with base flood elevation 15ft above mean sea level, therefore, Permittee shall comply with all applicable flood protection criterion required by the Federal Emergency Management Agency (FEMA) and MMC Title XI, Chapter 15. Permittee shall obtain a CLOMR-F from FEMA for the development. Lack of documentation will not preclude occupancy release.

66. Mailboxes: The Permittee shall obtain information from the US Postal Services regarding placement of required mailboxes. Structures to protect mailboxes may require Building, Engineering and Planning Department review.

67. Development Fees: Permittee shall pay the following development fees. The information listed in items "a" through "i" are based upon current fee rates; however, those fee rates are subject to change. The exact fee amount shall be determined at the time of building permit fee payment.

    a. Parkland Impact Fee
        1. The project is required to dedicate 1.8 acres of parkland, equivalent to $5,004,981.27 fees-in-lieu.
        2. The applicant will receive credit for 0.72 acres of private recreation space on site. Upon demonstration of provision of this private recreation space to the satisfaction of the Direction of Planning or his/her designee, $3,002,988.76 in parkland fees will be due, per table below.

Pulte Townhomes and Apartments Proposed	206
Pulte Townhomes and Apartments Population Estimate (2.49 persons/unit per Census)	513 persons
Citywide Parkland Requirement	5 acres/1,000 people or equivalent fees-in-lieu
Total Parkland Acreage or In-Lieu Fee Required	1.8 acres / $5,004,981.27

Private Recreation/Open Space provided in the Project	1.8 acres (only 0.72 acres can be counted for Park-In-Lieu fee purposes)
Public Recreation / Public Park Land provided	0.0 acres
Balance of Parkland Acreage or In-Lieu Fee Due	**$3,002,988.76**

b. Storm water connection fee at $16,771/acre for residential and $21,562/acre for commercial.
c. Water connection fee at $1,164/unit for residential, residential and $5.97/gpd for commercial, based upon increased water usage.
d. Sewer connection fee at $1,406/unit for residential and $8.52/gpd for commercial, based upon increased average wastewater flow.
e. Wastewater Treatment Plant fee per MMC VIII, Chapter 2, Section 7.04.
f. Calaveras Boulevard Widening Traffic Impact fee per Resolution No. 7894.
g. 3.8% of applicable fees in accordance with City Resolution No. 8969 as Permitting Automation Fee.
h. FEMA Flood Zone Designation Letter fee in the amount of $100.00 each.
i. Public Art Fee or Public Art on site, as set forth in Milpitas Municipal Code Section XI-10-14.

68. Foundation Design: Building foundations adjacent to public utilities shall be designed to be self-supporting such that the building weight is not required to be supported during shoring and excavation of adjacent utilities. If any project building is located next to a City easement, the City is not responsible for any foundation damage that would occur due to excavating in the event of servicing or repairs in that easement.

69. Fill and Retaining Wall Design in Sanitary Sewer Easement: The existing 10ft-wide sanitary sewer easement (SSE) located along the project property's southern side property line shall be kept clear of all unauthorized structures, including any retaining walls. For the design of any fill and retaining walls in the area within and immediately adjacent to this SSE, Permittee shall select one of the following design options that are either called out on the approved civil plan sheets or discussed with City staff in a meeting that took place on September 19, 2023:
    a. Permittee is to construct a retaining wall immediately north of the SSE to structurally support fill placed in the property's southern area north of the SSE. No structural fill is to be placed within the SSE under this design option.
    b. Neighboring property to the south at 1301 California Circle (APN 022-38-002) to dedicate a slope easement along the north edge of the property line for the benefit of the project property. Permittee is to place sloped fill in said easement to structurally support fill placed in the project property's southern area, including within the SSE.
    c. Permittee is to propose a realignment of the existing SSE away from the southern side property line that would allow them to construct a retaining wall along said property line to structurally support fill placed in the project property's southern

area, including within the SSE. Any proposed SSE realignment is subject to the approval of the City and must provide adequate space for the City to properly access, maintain, repair, and replace the existing 18" City sanitary sewer main located within the SSE.

DURING CONSTRUCTION

*The following conditions shall be complied with at all times **during** the construction phase of the project, unless otherwise approved by the Director of Engineering/City Engineer.* ***(E)***

70. Dewatering: If dewatering is needed during construction, Permittee shall obtain a Short-Term Industrial Wastewater Permit from the San Jose/Santa Clara Water Pollution Control Plant for discharging the groundwater to a sanitary sewer system.

71. Prohibition of Potable Water Usage: Permittee shall use recycled water for construction purposes, including dust control and compaction. Permittee shall comply with MMC VIII-6-5.00 and 6-6.00 where potable water usage is prohibited, unless otherwise approved by the City Council.

72. Construction Staging and Employee Parking: Permittee shall place all construction related materials, equipment, and arrange construction workers parking on-site and not located in the public right-of-ways or public easements.

73. Water Shut-down Plan: Permittee shall provide a water shut-down plan at least seven days in advance of the shut-down in coordination with the Engineering Inspector, and notify affected property owners/tenants when cut-in tee(s) is/are required.

PRIOR TO FIRST OCCUPANCY

*The following conditions shall be met **prior to** first building occupancy on either lot, unless otherwise approved the Director of Engineering/City Engineer.*

74. Completion of Public Improvements: Permittee shall complete all public improvements, including but not limited to frontage improvements along California Circle, onsite City water and sewer mains and their appurtenances, and sectional liners for the sanitary sewer mains along the project frontage, as shown on City approved plans.

75. LOMR-F: Permittee shall submit the FEMA approved LOMR-F for each unit/building associated with the requested occupancy, if project is located in the SFHA. Lack of documentation will not preclude occupancy release.

76. Elevation and/or Flood Proofing Certificate: Permittee's civil engineer shall submit Elevation and/or Flood Proofing Certificate for the lowest finished floor elevation of each building for City record.

77. Landscape Certificate of Completion: Permittee shall submit a Certificate of Substantial Completion that complies with the Milpitas Municipal Code Water Efficient Landscapes ordinance.

78. Record Drawings: Permittee shall submit record drawings in AutoCAD, Tiff, and PDF formats for City records. Record drawings shall include all public improvements. Additionally, if the project uses recycled water, the permittee shall also submit record drawings of on-site irrigation facilities.

79. Private Job (PJ) Balance: Permittee shall pay for any remaining balance from the Private Job deposit.

LEGEND
P = Planning Department
B = Building Department
E = Engineering Department
F = Fire Department
H = Housing Division
CAO = City Attorney's Office
ALL = All Reviewing Departments

NOTICE OF RIGHT TO PROTEST

The Conditions of Project Approval set forth herein include certain fees, dedication requirements, reservation requirements, and other exactions. Pursuant to Government Code Section 66020(d)(1), these Conditions constitute written notice of a statement of the amount of such fees, and a description of the dedications, reservations, and other exactions. You are hereby further notified that the 90-day approval period in which you may protest these fees, dedications, reservations, and other exactions, pursuant to Government Code Section 66020(a), began on date of adoption of this resolution. If you fail to file a protest within this 90-day period complying with all of the requirements of Section 66020, you will be legally barred from later challenging such exactions.

AGREEMENT

Permittee/Property Owner

The undersigned agrees to each and every condition of approval and acknowledges the NOTICE OF RIGHT TO PROTEST and hereby agrees to use the Project property on the terms and conditions set forth in this resolution.

Dated: _____ _____
Signature of Permittee

MEMORANDUM

Planning Department

To: Jay Lee, AICP, Planning Director, City of Milpitas

From: Michael Fossati, AICP, Senior Planner, City of Milpitas

Subject: Pulte Homes Affordable Apartment Modification – Section 15162 Evaluation

Date: February 8, 2025

This memorandum supports the finding that the Pulte Homes Affordable Apartment Modification ("Project") at 1355 California Circle is exempt from further review pursuant to California Environmental Quality Act ("CEQA") Section 15162 (Subsequent EIRs and Negative Declaration). The Project site is located at 1355 California Circle (APN 022-38-007) in the City of Milpitas, Santa Clara County. The proposed Project is described in the attached memorandum and is an amendment to a previously approved project for which an EIR was approved. This evaluation was performed to determine if conditions specified in CEQA Guidelines Section 15162 would require preparation of a subsequent EIR, subsequent negative declaration, an addendum, or no further documentation.

Background

On November 7, 2023, the City of Milpitas City Council certified a Final Environmental Impact Report ("EIR") (SCH#2022110251) and approved multiple entitlements to allow a development consisting of 131 townhome condominium residential units, up to 51-feet in height, a 75-unit residential apartment building, up to 77 feet, 4 inches in height, for a total of 206 residential units ("1355 California Circle Project") submitted by Pulte Homes. The development also included a 0.32-acre internal park and associated site improvements on a 6.7-acre site at 1355 California Circle. The approved apartment building within the 1355 California Circle Project included the following features:

- An L-shaped apartment building with a contemporary architectural design that includes shades of white, blue, beige, and light and dark grays exteriors
- Approximately 77 feet and four inches (six-stories) in height.
- A unit mix that includes 16 studios, 40 one-bedroom units, and 19 two-bedroom units (totaling 75 units) ranging in size from between 411 to 840 square feet.
- 85 parking spaces (1.13 stalls per residential unit and 1.01 stalls per bedroom).
- 31 residential units designated to low-income (51-80 percent Area Medium Income) individuals or households.
- 44 residential units designated to moderate-income individuals or households.
- Two outdoor amenity areas (one in the front and one in the rear of the building).

On September 12, 2024, Pulte Homes applied to modify the apartment building that was part of the 1355 California Circle Project. The new apartment includes the following features:

- A U-shaped modern architectural design that includes shades of blue, white, and light gray exteriors
- Approximately 65 feet (five-stories) in height.
- A unit mix that includes 30 one-bedroom units, 21 two-bedroom units, and 24 three-bedrooms units (totaling 75 units).
- 86 parking spaces (1.13 stalls per residential unit and 0.59 stalls per bedroom)
- All 75 residential units designated to either low or very-low (31-50 percent Area Medium Income) income individuals or households.
- Two outdoor amenity areas (one in the front and one in the center of the building).

The Pulte Homes Affordable Apartment Modification apartment building will be lower in height (65 feet compared to 77 feet, four inches) and larger in floor area (84,907 square feet compared to 66,767 square feet) then the apartment building within the 1355 California Circle Project. No additional units and one additional parking space (86 total) will be added. The Project design has changed from an L-shaped into a U-shaped building, and the exterior colors and materials will be modified from dark grey, light grey and a white color palette with black vinyl windows into a combination of sea-green/blue panels, white vinyl windows, and decorative trim accents. The residential apartment building within the 1355 California Circle Project had a stone veneer base at the ground floor, while the proposed Project has a brick-veneer base. Both apartments have up to two recreational amenity areas for residents. Additional features are discussed within the following memorandum.

CEQA Section 15162 -Subsequent EIR or negative declaration

When an EIR has been certified or a negative declaration adopted for a project, no subsequent EIR shall be prepared for that project unless the lead agency determines, on the basis of substantial evidence in the light of the whole record, one or more of the following:

1. *Substantial changes are proposed in the project which will require major revisions of the previous EIR or negative declaration due to the involvement of new significant environmental effects or a substantial increase in the severity of previously identified significant effects;*

2. *Substantial changes occur with respect to the circumstances under which the project is undertaken which will require major revisions of the previous EIR or negative declaration due to the involvement of new significant environmental effects or a substantial increase in the severity of previously identified significant effects; or*

3. *New information of substantial importance, which was not known and could not have been known with the exercise of reasonable diligence at the time the previous EIR was certified as complete or the negative declaration was adopted, shows any of the following:*

    A. *The project will have one or more significant effects not discussed in the previous EIR or negative declaration;*

    B. *Significant effects previously examined will be substantially more severe than shown in the previous EIR;*

    C. *Mitigation measures or alternatives previously found not to be feasible would in fact be feasible and would substantially reduce one or more significant effects of the project, but the project proponents decline to adopt the mitigation measure or alternative: or*

    D. *Mitigation measures or alternatives which are considerably different from those analyzed in the previous EIR would substantially reduce one or more significant effects on the environment, but the project proponents decline to adopt the mitigation measure or alternative.*

The evaluation section within this memorandum will demonstrate that no subsequent EIR, negative declaration, or addendum will be required due to the proposed changes within the 1355 California Circle Project.

Evaluation

The City of Milpitas finds that none of the three criteria listed above has occurred, as described below:

1. *There are no new substantial changes proposed within the 1355 California Circle Project that require major revisions of the previous EIR due to the involvement of new significant environmental effects or a substantial increase in the severity of previously identified significant effects.*

The following description is the 75-unit apartment building previously approved within the 1355 California Circle Project:

A six-story, 66,767 square foot apartment complex composed of 75 housing units. All 75 apartment units would be offered at below market rate ("BMR") rental prices, and it is anticipated that 20 units would be offered at the City's established "low-income rental rate", while the remaining 55 units would be offered at a "moderate rental rate" (MRR) rental prices. The units would consist of several studios, one bedroom, and two-bedroom units that range in size between 411 to 840 square feet. The six-story apartment complex would have a parking structure that would provide 58 covered parking spaces, and the on-site surface parking lot would provide an additional 27 residential parking spaces for a total of 85 parking spaces. Outdoor recreational amenities would include two outdoor terraces for residential use.

The previous EIR determined that the 1355 California Circle Project would have a significant and unavoidable impact due to the height of the apartment building[1] since the proposed, six-story, 77-foot, four-inch apartment structure would be visible from Interstate 880. The level of significance after mitigation for all other impacts were either "less than significant," "less than significant with mitigation incorporated," or "no impact."[2]

The Milpitas City Council adopted a Statement of Overriding Consideration and certified the EIR (SCH#2022110251) by agreeing the benefits of the 1355 California Circle Project outweigh the substantial adverse effect on the scenic vista.

The Pulte Homes Affordable Apartment Modification project consists of the development of an 84,907 square foot, 75-unit apartment building. All 75 apartment units would be offered at BMR rental prices, reserved for either low or very low-income households. The units would consist of 30 one-bedroom units, 21 two-bedroom units, and 24 three-bedroom units that range in size between 600 to 1,043 square feet. The five-story apartment building would have a ground floor parking structure that would host 86 covered parking spaces. Outdoor recreational amenities would include two outdoor terraces for residential use.

The proposed Project includes replacing the previously approved apartment design with another apartment building design, lower in height and with a greater number of affordable units reserved for low-income households. The same number of units (75 total) will remain and only one additional parking space will be added.

[1] Impact Sciences. (2023, July). 1355 California Circle Project Draft EIR (July 2023), https://www.milpitas.gov/DocumentCenter/View/3768/Milpitas-1355-California-Cir-Draft-EIR-PDF?bidId=. Pg ES-6 (Table ES-1)

[2] Ibid. Pg ES-6 – ES-18 (Table ES-1)

While the underlying project has changed, it has not done so in a way that alters or disturbs the analysis in the EIR, either by introducing significant new environmental effects or a substantial increase in the severity of previously identified effects. Notably, what has changed from the prior EIR is just the proposal for the apartment building; the townhouses and other amenities that comprise the majority of the development remain substantially the same. Even for the apartment building, the scope, location, siting, and size of the development remains the same or comparable in terms of predictable environmental impacts, including from construction. The increase in footprint is offset by a decrease in building height, which tends to lessen the previously identified significant visual impact of the building to cultural resources. The change in building shape is not significant, particularly given the orientation of the building and the direction of the new wing facing roughly in line with the mountains when viewed from the West. To the extent the previous development was predicted to have environmental effects, the development as amended would have the same effects. The changes in building height, shape, setbacks, materials, and unit composition are not of the kind that would significantly alter the severity of those impacts.

It is for these reasons the City determines that no substantial changes are proposed in the project which will require major revisions of the previous EIR or negative declaration due to the involvement of new significant environmental effects or a substantial increase in the severity of previously identified significant effects.

2. *There are no new substantial changes that occurred with respect to the circumstances under which the project is undertaken which will require major revisions of the previous EIR or negative declaration due to the involvement of new significant environmental effects or a substantial increase in the severity of previously identified significant effects.*

In CEQA terms, “environmental effects” refer to the physical changes or impacts a project may cause to the environment. These include changes to land, air, water, minerals, flora, fauna, ambient noise, and objects of historical or aesthetic significant. CEQA requires agencies to identify, disclose, and mitigate significant environmental effects of projects whenever feasible. “Significant effects” are defined as substantial adverse changes in physical conditions within the project area, including cumulative impacts from multiple projects. As of February 2025, no new physical development has occurred either within or around the Project site. Furthermore, the physical changes proposed within the Pulte Homes Affordable Apartment Modification include limited height, bulk, color, and material changes.

It is for these reasons the City determines that no substantial changes have occurred with respect to the circumstances under which the project is undertaken which will require major revisions of the previous EIR due to the involvement of new significant environmental effects or a substantial increase in the severity of previously identified significant effects.

3. New information of substantial importance, which was not known and could not have been known with the exercise of reasonable diligence at the time the previous EIR was certified as complete or the negative declaration was adopted, shows any of the following:

    A. The project will have one or more significant effects not discussed in the previous EIR or negative declaration;

    B. Significant effects previously examined will be substantially more sever than shown in the previous EIR;

    C. Mitigation measures or alternatives previously found not to be feasible would be fact be feasible and would substantially reduce one or more significant effects of the project, but the project proponents decline to adopt the mitigation measure or alternative; or

    D. Mitigation measures or alternatives which are considerably different from those analyzed in the previous EIR would substantially reduce one more more significant effects on the environment but the project proponents decline to adopt the mitigation measures or alternative.

The Project includes replacing the previously approved design of an apartment building with another design, which includes lowering the previously approved height and increasing the number of affordable units reserved for low-income households. The same number of units (75 total) will remain and only one additional parking space will be added. No new information of substantial importance, which was not known and could not have been known with the exercise of reasonable diligence at the time the previous EIR was certified as been identified. Per CEQA Section 15162 (b), no further documentation is needed. The previously prepared EIR continues to present sufficient and accurate environmental analysis with a mitigation and monitoring program that will adequately address the environmental impacts for the Project, as proposed for amendment.

MILPITAS PLANNING COMMISSION
STAFF REPORT

February 12, 2025

APPLICATION: **PULTE HOMES AFFORDABLE APARTMENTS MODIFICATION – 1355 CALIFORNIA CIR – P-SA24-0005 / P-DB24-0002:** A Site Development Amendment and Density Bonus Permit to modify the design and unit configuration of a previously approved 75-unit residential apartment building. The apartment building will include 86 vehicle parking spaces, two rooftop amenity areas, and associated site improvements on a 0.94-acre parcel at 1355 California Circle.

RECOMMENDATION: **Staff recommends that the Planning Commission open and close the public hearing, consider the exemption per CEQA Guidelines Section 15162, and adopt Resolution No. 25-003, recommending that the City Council approve Site Development Permit Amendment No. SA24-0005 and Density Bonus Permit No. DB24-0002 subject to the findings and Conditions of Approval.**

LOCATION:

Addresses /APN: 1355 California Circle (022-38-007)

Area of City: Northwestern portion of the City of Milpitas, east of Interstate 880, south of Dixon Road, west of Milmont Drive, north of Cadillac Court

PEOPLE:

Project Applicant: Erica Salum, *Pulte Homes Company LLC*, Pleasanton, CA

Property Owner: *AG EHC II LLC*, San Jose, CA

Project Planner: Michael Fossati, AICP, Senior Planner

LAND USE:

General Plan Designation: Neighborhood Commercial Mixed Use (NCMU)

Zoning District: Mixed-Use (MXD)

ENVIRONMENTAL: Exempt pursuant to CEQA Guidelines Section 15162 (Subsequent EIRs and Negative Declarations), which is permitted when an EIR has been certified or a negative declaration adopted for a project, no subsequent EIR shall be prepared so long as the lead agency can demonstrate if changes to a project warrant a subsequent negative declaration, addendum, or no further documentation.

EXECUTIVE SUMMARY

On September 12, 2024, Pulte Homes (applicant) submitted an application requesting a Site Development Permit (SDP) Amendment and Density Bonus Permit to modify the development of a 75 residential-unit apartment building that was part of a larger multi-family residential project previously approved on November 7, 2023, by the Milpitas City Council.

The following is a summary of the applicant's request:

1. Site Development Permit Amendment: To allow the modification of a previously approved residential apartment building.
2. Density Bonus Permit: To ensure compliance with State Density Bonus law and ensure the project eligibility for certain concessions and waivers under State Density Bonus Law.

Staff reviewed the entitlement applications outlined above and found the amendment consistent with the policies, standards, and processes outlined in the Milpitas General Plan 2040 and Zoning Ordinance. This report provides specific details and analysis and recommends the Planning Commission open and close the public hearing, consider the statutory exemption as outlined in CEQA Guidelines Section 15162 (Subsequent EIRs and Negative Declaration) and adopt Resolution No. 25-003, recommending that the City Council approve the above applications, subject to the findings and Conditions of Approval.

Map 1: Project Location

Map 2: Zoning Map

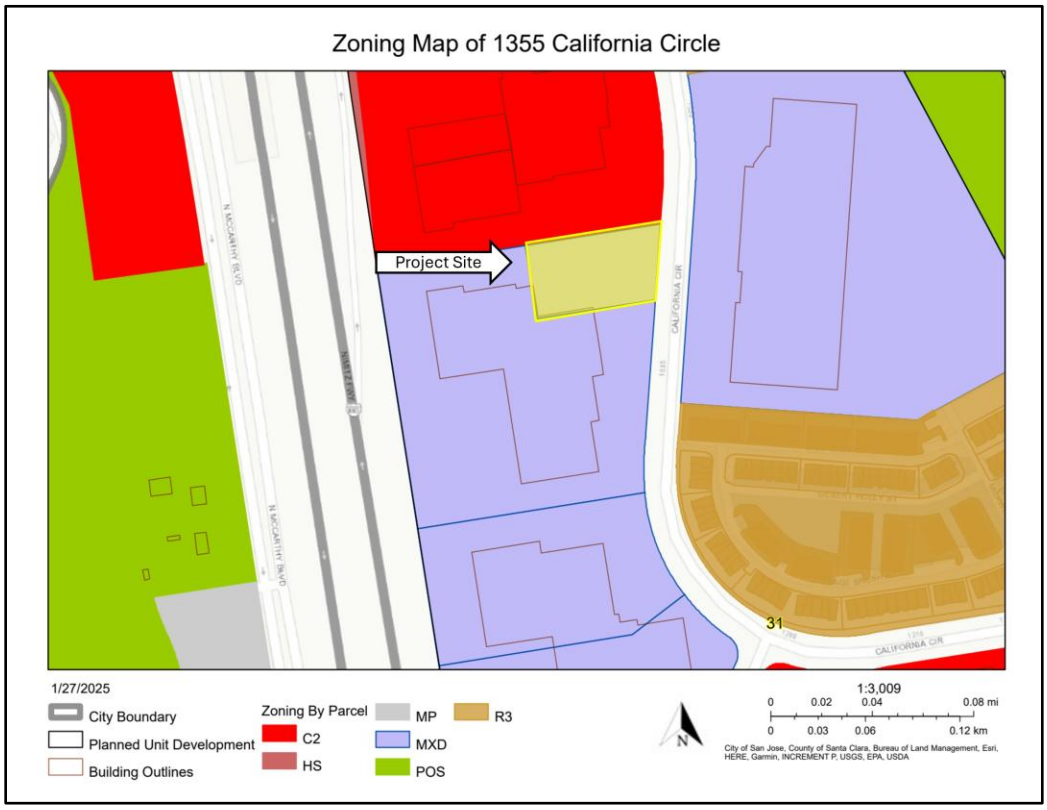

BACKGROUND

On November 7, 2023, the City of Milpitas City Council approved a development consisting of 131 townhome condominium residential units, up to 51-feet in height, a 75-unit residential apartment building, up to 77 feet, four inches in height, for a total of 206 residential units (1355 California Circle Project) submitted by Pulte Homes (applicant). The development also included a 0.32-acre internal park and associated site improvements on a 6.7-acre site at 1355 California Circle.

The applicant has applied to modify the apartment building's external and internal design, unit mix, and is requesting additional density bonus waivers within the 1355 California Circle Project, which require both Planning Commission review and City Council approval.

PROJECT DESCRIPTION

Pulte Homes has submitted a Site Development Permit (SDP) Amendment and Density Bonus application to modify the 75-residential unit apartment building within the 1355 California Circle Project. The apartment building was previously approved to include the following features:

- A L-shaped apartment building with a contemporary architectural design that includes shades of white, blue, beige, and light and dark grays exteriors.
- Approximately 77 feet and four inches (six-stories) in height.
- A unit mix that includes 16 studios, 40 one-bedroom units, and 19 two-bedroom units (totaling 75 units) ranging in size from between 411 to 840 square feet.

- 85 parking spaces (1.13 stalls per residential unit and 1.01 stalls per bedroom).
- 31 residential units designated to low-income (51-80 percent Area Median Income) individuals or households.
- 44 residential units designated to moderate-income individuals or households.
- Two outdoor amenity areas (one in the front and one in the rear of the building).

The proposed apartment building will incorporate many of the same features as the previously approved building, with the following modifications:

- A U-shaped modern architectural design that includes shades of blue, white, and light gray exteriors
- Approximately 65 feet (five-stories) in height.
- A unit mix that includes 30 one-bedroom units, 21 two-bedroom units, and 24 three-bedrooms units (totaling 75 units) ranging in size from between 600 to 1,043 square feet.
- 86 parking spaces (1.13 stalls per residential unit and 0.59 stalls per bedroom)
- All 75 residential units designated to either low or very low (31-50 percent Area Median Income) income individuals or households.
- Two outdoor amenity areas (one in the front above the first floor and one in the center of the building).

The proposed amendment is eligible for certain concessions, waivers, and parking incentives under State Density Bonus Law (Gov. Code § 65915 et seq.) because more than ten percent (10%) of the total units will be reserved for lower-income households. The "Project Analysis" section of this staff report includes a full discussion of the State Density Bonus provisions related to this Project.

Table 1 below summarize the land use designation and surrounding uses of nearby properties:

Table 1: Surrounding Zoning and Land Uses

	General Plan	Zoning	Existing Uses
Subject Site	Neighborhood Commercial Mixed Use (NCMU)	Mixed Use (MXD)	Vacant
North	Neighborhood Commercial Mixed Use (NCMU)	Industrial Park (MP)	Wholesale Furniture
South	Neighborhood Commercial Mixed Use (NCMU)	Mixed Use (MXD)	Vacant
East	Neighborhood Commercial Mixed Use (NCMU)	Industrial Park (MP)	Place of Assembly
West	N/A	N/A	Interstate 880

PROJECT ANALYSIS

This section will evaluate elements of the proposed amendment for conformance with the Milpitas 2040 General Plan, the Zoning Ordinance, and other provisions of the Milpitas Municipal Code, and State Density Bonus Law.

General Plan Conformance

The Project is consistent with General Plan policies, as demonstrated within Table 2.

Table 2: General Plan Consistency

Policy	Conformance
Policy LU 1-4: *Continue to provide for a variety of housing types and densities that meet the needs of individuals and families and offer residents of all income levels, age groups, and special needs sufficient housing opportunities and choices for locating in Milpitas.*	**Consistent.** The development includes a total of 206 new housing units, with 75 of those units within the previously approved apartment building. All 75 units would be rental units and offered at a below-market rate. The Project Applicant would allow Milpitas Unified School District Employees (MUSD) first right of refusal for the 75 apartment units, consistent with City policy to provide a variety of housing types for individuals and families of all types of income.
Policy LU 4-4: *Encourage new development to facilitate pedestrian, bicycle and transit access through techniques such as minimizing building separation from public sidewalks; providing safe, direct, accessible, convenient, and pleasant pedestrian connections; including secure and convenient bike storage; and orienting building entrances to transit service.*	**Consistent**. Approving the proposed apartment modification would not impact the investment into pedestrian, bicycle and transit access. The developer has designed the project to maintain the existing sidewalks and develop interior walkways to support pedestrian travel. Bicycle parking will also be developed and bicycle storage areas have been identified in the modified apartment building. Lastly, a pedestrian crosswalk across California Circle will remain, providing pedestrian access to nearby walking trails and a future public park within the new development.
Policy LU 2-3: *Allow densities and intensities which exceed the generally allowed ranges defined by the underlying land use for projects utilizing Density Bonus provisions (included within the Milpitas Affordable Housing Ordinance Title XII - HOUSING Chapter 1 - AFFORDABLE HOUSING ORDINANCE) including bonuses for senior housing, affordable housing, and for projects within designated overlay districts included*	**Consistent.** The apartment modification includes a proposal to provide all 75 residential units to either low or very-low-income individuals or families, consistent with the GP policy to support density bonuses for affordable housing.

Policy	Conformance
in Milpitas Municipal Code Section 12 - Overlay Districts and Standards	

Zoning Conformance

The proposed apartment modification is consistent with most of the Mixed-Use Zoning (MXD) District development standards, as demonstrated in Table 4. Where conformance cannot be found, the applicant has requested waivers as permitted per State Density Bonus Law, for certain affordable housing projects.

Table 3: Summary of MXD Development Standards

Development Standard (MXD)	Minimum Required	Proposed	Conformance
Density	21-30 du/ac	30.8 du/acre (for the 6.7-acre site, as contemplated for the entire project)	Yes, *with Density Bonus*
Front Yard Setback (east)	Minimum of 8 feet and a maximum of 15 feet from back of sidewalk.	4 feet, 9 inches to 13 feet, 7 inches	Yes, *with Density Bonus Waiver*
Side Yard Setback (north)	10 feet	14 feet, 6 inches	Yes
Side Yard Setback (south)	10 feet	4 feet, 5 inches	Yes, *with Density Bonus Waiver*
Rear Yard Setback (west)	10 feet	11 feet	Yes

Development Standard (MXD)	Minimum Required	Proposed	Conformance
Height	3 stories and 45 feet	~65 feet	Yes, *with Density Bonus Waiver*
Landscaping	All required front and street setback areas shall be landscaped or paved to allow for outdoor seating, display or goods, or street furniture	All required front and street setback areas are landscaped or paved	Yes
Parking	1 bedroom: 1.5 per unit (45 spaces) 2-3 bedrooms: 2 per unit (90 spaces) Guest: Projects with parking structures: 15 percent of the total required. (20 spaces) **Total – 155 spaces**	86 spaces	Yes, *with Density Bonus Parking Reduction Incentive*
Bicycle Parking	5 percent of the total required Total: 8	8	Yes

State Density Bonus Law

State Density Bonus Law (Gov. Code § 65915 et seq.) incentivizes affordable housing by offering developers certain benefits. According to State Density Bonus Law (SDBL), developers that reserve "*at least 10 percent of the housing units restricted to lower income residents*" are entitled to waivers, concessions, and incentives (which include parking reductions).The city cannot deny a waiver, concession, or incentive unless it can demonstrate the exception will not *result in an identifiable cost reduction* for the project, *have a specific adverse impact upon public health and safety* (per Section 50052.5 of the California Health and Safety Code), *would be prohibited by CEQA* (Pub. Resources Code, § 21000 et seq.), or otherwise be *contrary to state or federal law*.

Since the 1355 California Circle Project reserved more than 10 percent of the total housing units to low-income households, the applicant was entitled to waivers and three concessions under SDBL. The applicant requested (and obtained approval) for the following waivers and concessions in 2023 from the Milpitas Municipal Code (MMC).

1. Density Bonus: The applicant is permitted to develop more dwelling units than the zoning standard allows.
2. Front Setback: The applicant is permitted to have an approximately 19-foot front setback when a maximum front setback of 15-feet is required.
3. Building Height: The applicant is permitted to develop the townhomes and apartment building over the 3 stories, 45 feet height limit is required.
4. Parking Reduction Incentive: The applicant is permitted to provide 85 parking space for the apartment building when 140 parking spaces were required.
5. Additional Parking Waiver: The applicant is permitted to provide 46 guest vehicle parking spaces for the townhomes and apartment when 52.4 vehicle parking spaces were required.

As previously discussed, the proposed project will not affect the total number of affordable units previously approved, therefore the project is still entitled to additional waivers and the remaining concessions.

Table 4 outlines the modified waivers, new waivers, and parking reduction requested by the applicant for City Council's consideration.

Table 4: State Density Bonus – Waivers, Concessions, and Incentives

Type of Modification	Standard	Applicant Request	Justification	Waiver Previously Requested	Discretion
Waiver for Front Setback	Minimum 8 feet, Maximum 15 feet	4 feet, 9 inches to 13 feet, 7 inches	A lesser front yard setback provides the developer greater floor area to increase affordable units on-site.	Yes	This waiver is allowed under State Density Bonus.
Waiver for Side Setback	10 feet	4 feet, 5 inches	The reduced side setback is needed to comply with Fire requirements for adequate space to maneuver aerial apparatus along the	No	This waiver is allowed under State Density Bonus Law.

Type of Modification	Standard	Applicant Request	Justification	Waiver Previously Requested	Discretion
			northern property line.		
Waiver for Building Height	3 stories and 45 feet	5 stories and 65 feet	A greater height provides the developer more floor area to increase affordable units on-site.	Yes	This waiver is allowed under State Density Bonus Law.
Parking Reduction Incentive	155 spaces (Pursuant to MMC Section XI-10-53.09)	86 spaces	State Density Bonus Law dictates minimum parking standards for qualifying affordable housing developments.	Yes	This parking reduction is allowed under State Density Bonus Law.

There are three waivers and one parking incentive that has been requested under SDBL. The applicant has provided a project narrative stating why the concession, waivers, and incentives are appropriate.

The waiver for the front setback, building height, and parking incentive were previously approved by City Council. The new waiver request is associated with the side setback. The applicant states "*an aerial apparatus access roadway is required by the Fire Department to serve the building, because it must be within 30' of the exterior residential wall. Waiver of this side yard setback allows for the building to be within the 30' range for fire. Due to fire requirements, not granting this side yard setback would preclude the construction of the development of affordable units.*" Planning staff agree that the waiver is valid, because not allowing it may *adversely impact public health and safety*.

Architectural Design

The previously approved apartment building was a six-story, L-shaped contemporary structure with a distinctive façade combining different colors and materials, including three main architectural volumes with varying heights and setbacks and a dark grey, light grey and white color palette and black vinyl windows. The ground floor base podium was made of concrete material and includes large windows and street-level access. The window patterns were maintained vertically, providing an aesthetic consistency that complimented the structure. Figure 1 is a rendering of the previously approved apartment building and Figure 2 is the first floor site plan.

Figure 1 – Previously Approved Apartment Building - Rendering

Figure 2 – Previously Approved Apartment Building – Site Plan

The proposed apartment building has a subtlety different design focus. The five-story modern design is in more of a U-shaped design with sea-green/blue panels with white trim around the vinyl windows. The central white vertical element includes wood-look accents that create visual interest and assist in breaking up the front façade. The subtle roofline variations add architectural interest, but do not mimic the substantial roofline changes of the previously approved apartment. Like the previously approved apartment building, the new design incorporates a base podium. The difference between the previously approved building and the new one is the materials proposed for the podium. The new design includes a brick veneer and large storefront windows. In summary, the overall design provides clean lines and simple geometric forms to create a modern appearance, consistent with the proposed townhomes being built to the south. Furthermore, the new apartment building design has less articulation which lowers costs and makes this project more financially feasible. Figure 3 is a rendering of the new proposed apartment building and Figure 4 is the proposed first floor site plan.

Figure 3 – Proposed Apartment Building - Rendering

Figure 4 – Proposed Apartment Building – Site Plan

Affordable Housing Ordinance

According to Milpitas Municipal Code (MMC) Section XII-1-3.00 (Affordable Housing), an applicant must reserve 15 percent of the total number of dwelling units as affordable units. Per the AHO, the affordable units need to be "reasonably dispersed" and "reasonably consistent" with the market rate units. Table 5 demonstrates the objective requirements to meet the AHO standards for the 1355 California Circle Project.

Table 5: AHO Requirements

Unit Type	Units Developed	AHO Requirement	Units Required
Townhome	131	15 percent	19.65
Apartment	75	15 percent	11.25

At the November 7, 2023, City Council meeting, the applicant presented an alternative method of meeting the intent of the AHO, known as an "Affordable Housing Ordinance Exception." The applicant proposed reserving 31 apartment units for lower-income households, meeting the 15 percent requirement of the total number of dwelling units. The applicant also proposed reserving the remaining 44 apartment units for moderate-income households, bringing the approved projects total Below Market Rate (BMR) contribution to 36.4 percent. Furthermore, the applicant committed to working with Milpitas Unified School District (MUSD) to provide housing

opportunities for their employees that meet the income qualifications. The reservation of more units was proposed in consideration of reserving both townhome and apartment affordable units. The City Council approved the AHO exception.

The proposed SDP amendment and Density Bonus Permit will not change the conditions of the previous approved project. The only difference is that instead of reserving 15 percent of the total units for low-income households, 36.4 percent of the total units will be reserved for either low or very low-income households, significantly increasing the opportunities to provide housing for all income levels. The applicant is requesting the City Council agree to again, approve the AHO exception, based on the findings in the staff report and resolution.

FINDINGS FOR APPROVAL

A finding is a statement of fact relating to the information that the Planning Commission has considered in making a decision. Findings shall identify the rationale behind the decision to take a certain action.

Site Development Amendment Permit

To qualify for a Site Development Amendment Permit, the following standards must be met pursuant to Section XI-10-57.03(F)(1)

1. *The layout of the site and design of the proposed buildings, structures and landscaping are compatible and aesthetically harmonious with adjacent and surrounding development.*

   The 1355 California Circle Project consists of 131 townhome condominium units and 75 apartment units and associated site amenities on a 6.7-acre site. The proposed modification of the apartment building structure within the 1355 California Circle Project will remain compatible with the townhome condominium design. The previously approved townhome and redesigned apartment building will incorporate contemporary architectural features consistent with residential structures along California Circle. The modified apartment building height will be approximately 65 feet, consistent with the approximately 40 feet tall townhome structures in the immediate area. The modified apartment building maintains a strong relationship to the street in that its primary entrance is oriented toward the street. The building's design features exterior plaster walls, vinyl windows, accented with brick veneer along the ground floor, along with an aluminum storefront system to create an aesthetically harmonious development.

2. *The Project is consistent with the Milpitas Zoning Ordinance.*

   The proposed modification is generally consistent with the Milpitas Zoning Ordinance and MXD zoning standards, as demonstrated in Table 4. The proposed multi-family residential building is permitted in the MXD zoning district. The project design conforms to the site and development standards of the MXD zone. The apartment modification also conforms with MMC Section XI-10-54.015 (Density Bonus for Affordable Housing Developments) and XI-10-57.05 (Density Bonus Permits). Where exceptions from the MXD standards are needed, the applicant has requested waivers and parking exceptions pursuant to the State Density Bonus Law (Gov. Code § 65915 et seq.). The requested waivers and parking exception will support the development of affordable housing on a site where it would not otherwise be possible through a strict application of the specified zoning standard.

3. *The Project is consistent with the Milpitas General Plan.*

   The proposed Project is consistent with the Milpitas General Plan as demonstrated and outlined in Table 2. Furthermore, as the Project is an eligible housing project under State Density Bonus Law, Government Code Section 65915(p)(5), the Project is entitled to waivers, concessions and incentives. The requested waivers and parking incentives will support the development of affordable housing units on a site where it would not otherwise be possible through a strict application of the specific standard.

Density Bonus Permit

To qualify for a Density Bonus Permit, the following standards must be met pursuant to Milpitas Municipal Code Section XI-10-54.15(D):

1. *The maximum allowable base density specified in the General Plan, including any other permitted increases to density.*

   The previously approved development includes 131 townhome condominiums and 75 apartment units, equaling to 30.8 dwelling units per acre, meeting the General Plan density allowed the NCMU land use designation with the applicable incentives granted by SDBL factored in. The proposed modification will not affect the total number of units or density.

2. *All affordable units shall be reasonably dispersed throughout the project, shall contain on average the same number of bedrooms as the non-affordable units in the project, and shall be comparable with the non-affordable units in terms of appearance, materials and finished quality. The Planning Commission may recommend to the City Council and/or Redevelopment Agency modifying the requirements as to unit size or type, if it is found that such a modification would better serve the affordable housing need of Milpitas.*

   The previously approved development received an exception to this standard. Instead of providing 19 affordable townhome condominiums and 11 affordable apartment unit (15 percent of the total number of dwelling units), the applicant reserved 31 apartment units for lower-income households and 44 apartment units for moderate-income households, bringing the total BMR contribution to 36.4 percent of the total number of dwelling units. The proposed modification will reserve all 75 apartment units to either low or very low-income households, further increasing the affordable housing stock to all income level households. Furthermore, the developer has committed to working with Milpitas Unified School District to market housing opportunities for their employees.

3. *Prior to final building inspection and occupancy for a project containing affordable units, the applicant shall execute and record at the Santa Clara County Recorder's Office the City's Agreement Imposing Restrictions on Real Property, which Agreement shall explain the affordability requirements. The agreement shall be approved by the Milpitas City Attorney prior to recordation.*

The Project has been conditioned to provide an agreement to the City of Milpitas explaining the affordability requirements, processes and procedures, to the satisfaction of the Milpitas City Attorney prior to the release of any Certificate of Occupancy.

4. *Retaining Affordability. A developer shall agree to, and the City shall insure continued affordability of, all lower- or very low-income density bonus units for thirty (30) years or a longer period of time, if required by the construction or mortgage financing assistance program, mortgage insurance program, or rental subsidy program.*

   Prior to final building inspection and occupancy for the modified apartment building, the applicant shall execute and record at the Santa Clara County Recorder's Office the City's Agreement Imposing Restrictions on Real Property, which Agreement shall explain the affordability requirements, including continued affordability for low and very low-income households. The agreement shall be approved by the Milpitas City Attorney prior to recordation.

5. *Affordable Rents. Those units targeted for lower-income households, as defined in Section 50079.5 of the Health and Safety Code shall be affordable at a rent that does not exceed thirty (30%) of sixty (60%) percent of the Santa Clara County median income. Those units targeted for very low-income households, as defined in Section 50105 of the Health and Safety Code, shall be affordable at a rent that does not exceed thirty (30%) of fifty (50%) percent of County median income.*

   All 75 apartment units will be targeted to either low or very low income households, as defined in Section 50079.5 of the Health and Safety Code, which states that lower-income households shall be affordable at a rent that does not exceed thirty (30%) of sixty (60%) percent of the Santa Clara County median income and units targeted to very low-income households, as defined in Section 50105 of the Health and Safety Code, shall be affordable at a rent that does not exceed thirty (30%) of fifty (50%) percent of County median income.

6. *Relation to Statute. Density bonus requirements not specified in these regulations shall be governed by the State Density Bonus Law, Government Code section 65915, et seq.*

   The developer has identified and requested bonus incentives held within the State Density Bonus Law and outlined within the staff report.

Affordable Housing Ordinance Exception

The City Council may allow an exception to the requirement to construct on-site affordable units for a residential ownership project when the applicant contributes to the City's affordable housing needs through one of the alternatives set forth in MMC Sections XII-1-4.00-XII-1-4.02, provided that prior to City Council approval to the requested exception, the City Council must make the following findings:

1. *The development as proposed with the exception as provided pursuant to this Section would further the City's low and/or moderate-income housing goals as contained in the Housing Element; and*

In order to comply with this section, the ordinance requires the Project to provide 19 townhomes, as moderate-income, and 11 apartment units, as low-income, for affordable housing, for a total of 31 affordable housing units. The applicant proposes to deviate from the ordinance and meet the City's affordable housing requirement by not reserving any townhome units but reserving 75 apartment units for either low or very low-income households, exceeding the 15 percent requirement of the total number of dwelling units. By granting this exception, the City would add 75 affordable housing units into the Milpitas housing stock which supports the City's RHNA obligation.

2. *The development with the exception either (i) will result in at least two of the following:*
    a. *The development of a larger number of deed-restricted affordable units than would be created under the on-site requirement;*
    b. *The development of a larger number of deed-restricted affordable bedrooms than would be created under the on-site requirement;*
    c. *The development of a larger amount of deed restricted affordable living area than would be created under the on-site requirement;*
    d. *The development of deed-restricted affordable units at a lower average income target as compared to the affordable units that would be created under the on-site requirement;*
    or (ii) will provide other community benefits that exceed the benefit of constructing on-site affordable units.

The proposed development, with the exception, will result in a larger number of deed-restricted affordable bedrooms and a larger amount of deed-restricted affordable living area than would be created under the on-site requirement. The total number of bedrooms under the applicant's modification would be 144, whereas the required number would be 74 bedrooms. The total square footage of proposed living space under the applicant's modification would be 61,250, whereas the required amount of living space would be 41,548 square feet. Lastly, the developer has committed to working with Milpitas Unified School District to provide housing opportunities for their employees.

ENVIRONMENTAL REVIEW

On November 7, 2023, the City Council certified a Final Environmental Impact Report (FEIR) (SCH#2022110251) for the 1355 California Circle Project by holding a duly noticed public hearing on the EIR, presented the Findings of Fact and a Statement of Overriding Consideration, considered all written and oral reports of staff and public testimony on the matter, and such matters are reflected in the record of the matter and determined that the benefits of the 1355 California Circle Project outweigh its potential significant environmental impact by adopting a Statement of Overriding Consideration.

On September 12, 2024, Pulte Homes applied to modify the development of a 75 residential-unit apartment building that was part of the 1355 California Circle Project. The modified apartment building will be lower in height (65 feet compared to 74 feet) and larger in floor area (84,907 square feet compared to 66,767 square feet), yet the overall building footprint is not substantially changing. The number of units (75 total) will remain the same and one additional parking space (86 total) will be added.

It is for these reasons the proposed project is exempt pursuant to CEQA Guidelines Section 15162 (Subsequent EIRs and Negative Declaration), which states that when a EIR has been certified or a negative declaration has been adopted for a project, no subsequent EIR shall be prepared for the that project unless the lead agency determines, on the basis of substantial evidence in the light of the whole record, that either a substantial change (as described per CEQA Guidelines Section 15162 (a)(1) and (2)) or new information of substantial importance (as described per CEQA Guidelines 15162 (a)(3)(A)(B)(C)) have occurred. No substantial change or no information of substantial importance has been determined based on the analysis of the proposed modification. Attachment B is a staff memorandum providing further analysis of the Section 15162 CEQA exemption.

PUBLIC COMMENT/OUTREACH

Staff provided public notice of the application in accordance with City and State public noticing requirements. At the time of publishing this report, no public comments have been received. A notice was published in the Milpitas Post on January 31, 2025. In addition, notices were sent to all owners and occupants within 1000 feet of the project site. A public notice was also posted at the project site, on the City's Website, www.milpitas.gov, and at City Hall.

RECOMMENDATION

Staff recommends that the Planning Commission:

1. Open the Public Hearing to receive comments.
2. Close the Public Hearing.
3. Adopt Resolution No. 25-003, recommending that the City Council approve Site Development Permit Amendment No. SA24-0005 and Density Bonus Permit No. DB24-0002, subject to the findings and Conditions of Approval.

ATTACHMENTS

A: Resolution No. 25-003 with Conditions of Approval
B: Pulte Homes Affordable Apartment Modification – Section 15162 Evaluation
C: Project Plans
D: Project Narrative for the concessions, waivers, and incentives.
E: City of Milpitas 1355 California Circle Project DEIR, dated July 2023
F: City of Milpitas 1355 California Circle Project FEIR, dated September 2023

CITY OF MILPITAS
Planning Commission

MEETING MINUTES

7:00pm
Wednesday, February 12, 2025
CITY COUNCIL CHAMBERS,
455 E CALAVERAS BLVD, MILPITAS, CA
and
via TELECONFERENCE (Zoom Webinar)

CALL TO ORDER

Vice Chair Sonia Medina-Ashby called the meeting to order at 7:00 pm.

PLEDGE OF ALLEGIANCE

Vice Chair Sonia Medina-Ashby led the pledge of allegiance.

ROLL CALL

Recording Secretary Medina called the roll.

PRESENT: Vice Chair Medina-Ashby, Gupta, Caulkins, and Kong.

ABSENT: Albana, Galang, Awasthi

STAFF: Jay Lee, Christopher Creech, Michael Fossati, Holly Pearson, and Elizabeth Medina

CONFLICT OF INTEREST/CAMPAIGN CONTRIBUTION DECLARATION

Assistant City Attorney Christopher Creech asked if any member of the commission had any personal or financial conflict of interest related to any of the items on the agenda, and there were none.

ELECTION OF CHAIR AND VICE CHAIR FOR 2025

Caulkins nominated Gupta for Chair. Gupta accepted the nomination.
Motion/Second Kong/Caulkins
Motion carried by a vote of AYES: 4 NOES: 0

Kong nominated Caulkins for Vice Chair. Caulkins accepted the nomination.
Motion/Second Gupta/Medina-Ashby
Motion carried by a vote of AYES: 4 NOES: 0

APPROVAL OF THE MEETING AGENDA

By motion, approve the meeting agenda for February 12, 2025.

Motion/Second Caulkins/Medina-Ashby
Motion carried by a vote of AYES: 4 NOES: 0

APPROVAL OF THE MEETING MINUTES

By motion, approve the meeting minutes for January 8, 2024.

Motion/Second Kong/Medina-Ashby
Motion carried by a vote of AYES: 4 NOES: 0

ANNOUNCEMENTS

There were no announcements from Planning Director Lee or Planning Commissioners.

PUBLIC FORUM

Chair Gupta invited members of the public to address the commission, and there were none.

PUBLIC HEARING

X-1 PULTE HOME AFFORDABLE APARTMENTS MODIFICATION – 1355 CALIFORNIA CIRCLE – P-SA24-0005 / P-DB24-0002: A Site Development Amendment and Density Bonus Permit to modify the design and parking for a previously approved affordable residential apartment building, up to 78-feet in height, for a total of 75 residential units. The apartment building will include 85 vehicle parking spaces, two rooftop amenity areas, and associated site improvements on a 0.9-acre parcel at 1355 California Circle. An addendum to the Environmental Impact Report (SCH #2022110251) has been prepared, pursuant to CEQA Guidelines Section 15164 (Addendum to an EIR).

(23:25) Project Planner Michael Fossati and applicant's team, Jim Sullivan (Pulte), Megan Palmer (KTGY Architecture), and Sean Rossen (Waterford Property Company) addressed commissioners' clarifying questions on various topics related to:

- **Clarification on First Right of Refusal for Milpitas Unified School District (MUSD):** the resolution does not explicitly grant a first right of refusal. Instead, Condition 26 refers to the Affordable Housing Agreement. A separate private agreement between the developer and MUSD, which the city is not involved in but must comply with the Affordable Housing Ordinance.
- **Duration of Affordability Agreements:** The regulatory agreement ensuring affordability will last for 55 years, clarifying a potential confusion about a 30-year period.
- **Parking and Density Bonuses:** The project utilizes density bonuses to waive certain parking requirements. Fewer parking spaces are being offered than the typical city requirements, though state guidelines provide some flexibility for the developer.
- **Community and City Involvement:** There is a strong focus on aligning the developer's approach with the city's affordable housing ordinances. The city is committed to supporting the project's success.
- **Parking Concerns:** The project includes 86 parking spaces for 75 units, but concerns were raised about the adequacy of parking for guests, overflow, and street parking availability given the unit-to-parking ratio.
- **Parking Fee and Payment:** The developers have already paid $3.9 million in parking fees to the city, with further discussions regarding adjustments to these fees.
- **School Fees and Impact:** Conversations were held around the impact of the project on local schools, particularly regarding any fees or obligations associated with the development.
- **Building Design and Height Adjustments:** There was a shift from a six-story to a five-story building, with a focus on minimizing the building's impact on the surrounding community.
- Parking Issues and Solutions: To address potential parking concerns, the developers are considering collaboration with nearby commercial buildings for additional parking spaces.
- **Project Design and Safety:** Discussions included adding a parkway and ensuring the design supports pedestrian safety. A shared rendering

helped clarify the design, with special attention given to creating an appropriate and safe building entrance.

Motion to close the Public Forum.

Motion/Second Caulkins/Gupta
Motion carried by a vote of AYES: 7 NOES: 0

Recommendation: Staff recommends that the Zoning Administrator open and close the public hearing, consider the exemptions in accordance with CEQA, and adopt Resolution 25-003, approving Site Development Permit No. SA24-0005 and Density Bonus No. DB24-0002, subject to the Conditions of Approval.

Motion/Second Gupta/Albana
Motion carried by a vote of AYES: 6 NOES: 1 (Caulkins)

NEW BUSINESS

XI-1 STUDY SESSION FOR COMPREHENSIVE ZONING ORDINANCE UPDATE (Phase 2): Commission received presentation from Project Manager Holly Pearson and LWC Consultant, Jennifer Murillo, regarding the Comprehensive Zoning Ordinance Update.

(1:41:57) Discussion consisted of:

1. **Permit Level Reduction**:
    a. A positive change, with reduced permitting levels expected to lower both permit fees and review times for certain projects. This will streamline approvals for projects with lower review levels. Other projects will follow the current process.
2. **Housing Opportunity District vs. Zoning Update**:
    a. The Housing Opportunity District (HOD) and the zoning update are separate initiatives. The zoning update mainly focuses on modernizing the text of the zoning ordinance, while the HOD encourages housing development in specific areas. Both efforts aim to implement the General Plan, with no conflicts between the two.
3. **Permit Requirement Clarification**:
    a. "P" in the permit table means the use is permitted by right, though other permits (like a site development permit) may still be required.
    b. Mobile food parks only need a minor conditional use permit (MCUP) in mixed-use zones, focusing on site amenities and layout, not infrastructure.
    c. The appropriate permit level for mobile food parks will be reconsidered based on community feedback.
4. **Parking Requirements**:
    a. Proposed changes reduce parking requirements for certain residential units. For single-family homes, uncovered driveway spaces may count toward parking requirements, but covered parking will still be mandatory.
    b. The need for clearer guidelines on including uncovered parking in meeting the requirements was acknowledged.
5. **Transportation Demand Management (TDM)**:

a. TDM is mandatory for projects meeting certain size thresholds and includes a mix of strategies to reduce vehicle trips.
b. No detailed point system exists yet, but the city plans to monitor the effectiveness of these strategies and make adjustments as needed.
c. The burden of implementation and monitoring may fall on the city, but efforts will minimize the impact on staff, with a focus on applicants providing the necessary information.

6. **Staffing Impacts**:
   a. Lowering permitting levels for certain projects may free up staff time for other tasks but won't drastically change the workload.
   b. A careful and selective approach has been taken in determining which projects benefit from reduced permitting levels.
7. **Single-Family Residential Design Standards**:
   a. A concern was raised about the feasibility of a 40-square-foot patio requirement for higher-density, multi-story homes with small lot sizes. This will be reviewed for further feedback and adjustments.

ADJOURNMENT

Chair Gupta adjourned the meeting at 9:03 pm
Motion/Second Caulkins/Kong
Motion carried by a vote of AYES: 4 NOES: 0

Meeting Minutes submitted by
Planning Commission Secretary Elizabeth Medina

RESOLUTION NO. 25-003

A RESOLUTION OF THE PLANNING COMMISSION OF THE CITY OF MILPITAS RECOMMENDING TO THE CITY COUNCIL TO APPROVE SITE DEVELOPMENT PERMIT AMENDMENT NO. SA24-0005 AND DENSITY BONUS PERMIT NO. DB24-0002 TO MODIFY A PREVIOUSLY APPROVED 75-UNIT APARTMENT BUILDING, DEVELOP 86 VEHICLE PARKING SPACES, TWO ROOFTOP AMENDITY AREAS, AND ASSOCIATED SITE IMPROVEMENTS WITHIN THE "1355 CALIFORNIA CIRCLE PROJECT" ON A 0.94-ACRE PARCEL AT 1355 CALIFORNIA CIRCLE AND MAKING THE FINDING OF CEQA EXEMPTION

WHEREAS, the City of Milpitas, California (the "City") is a municipal corporation, duly organized under the constitution and laws of the State of California; and

WHEREAS, California Government Code Section 65800 et seq. authorizes the adoption and administration of zoning laws, ordinances, rules, and regulations by cities as a means of implementing the General Plan; and

WHEREAS, Section 3.03 of Chapter 10 Zoning of Title XI of the Milpitas Municipal Code, divides the City into zoning districts; and

WHEREAS, on November 7, 2023, the City Council of the City of Milpitas approved Resolution #9282, which permitted a development of a multi-family residential project consisting of 13 residential buildings, up to 51-feet in height, and one residential apartment building, up to 78-feet in height, for a total of 206 residential units, with 393 vehicle parking spaces, a 0.32-acre internal park, and associated site improvements located at 1355 California Circle ("the 1355 California Circle Project") submitted by Pulte Homes Company LLC ("Applicant"). The approval included the following entitlements:

a. General Plan Text Amendment (GP22-0001): To remove language associated with the California Circle Specific Plan within the General Plan 2040 by amending the Neighborhood Commercial Mixed-Use (NCMU) designation (pg. LU-6), removing the "California Circle Specific Plan Overlay" statement (pg. LU-8) and amending Action LU-2b (pgs. LU-17 and LU-18).

b. Zoning Map Amendment (ZA22-0001): To amend the zoning map to change the property zoning designation from Industrial Park (MP) to Mixed-Use District (MXD).

c. Site Development Permit (SD22-0003) to allow the development of a multi-family residential project consisting of 13 residential buildings, up to 51 feet in height, and one residential apartment building, up to 78 feet in height, for a total of 206 residential units on a 6.7-acre site.

d. Conditional Use Permit (UP22-0001) to allow for condominium use, associated subdivision, and tandem parking.

e. Vesting Tentative Map (MT22-0001) to establish 14 lots, 131 residential condominium spaces, and related common areas.

f. Density Bonus Permit (DB23-0003) to ensure compliance with State Density Bonus law and regulations and grant a modification of the distribution requirement so affordable units can be constructed in the apartment building only.

g. Tree Removal Permit (TR23-0021) to remove 27 ordinance-sized trees and replace them with 269 new trees.

h. Environmental Assessment (EA22-0002: To review and assess all requested entitlements for consistency with the California Environment Quality Act (CEQA).

WHEREAS, in order to evaluate and approve the 1355 California Circle Project under the California Environmental Quality Act ("CEQA," codified at Public Resources Code § 21000, et seq., as further governed by the CEQA Guidelines, found at 14 C.C.R. § 15000, et seq.), an environmental impact report was prepared (the Draft EIR, as revised by the Final EIR's errata section, together with the other sections of the Final EIR, are collectively referred to herein as the "EIR," State Clearinghouse No. 2022110251); and

WHEREAS, on November 7, 2023, the City Council of the City of Milpitas certified the EIR ("Resolution No. 9281") for the 1355 California Circle Project by making environmental findings pursuant to CEQA and adopting a statement of overriding considerations and a mitigation monitoring program; and

WHEREAS, on September 12, 2024, Pulte Homes Company LLC submitted an application to the City of Milpitas to modify the physical elements of the residential apartment building ("Project") previously approved within the 1355 California Circle Project. The Project requires approval of the following entitlements:

a. Site Development Permit Amendment to change the overall design of the previously approved apartment building by lowering the height (from approximately 78 feet and six stories to approximately 65 feet and five stories), increasing the residential floor area (84,097 square feet compared to 66,767 square feet), modifying the unit type (replace 16 studios, 40 one-bedroom units, and 19 two-bedroom units with 30 one-bedroom units, 21 two-bedroom units, and 24 three-bedroom units), increase the number of vehicle parking spaces (from 85 parking spaces to 86 parking spaces) and changing the design, colors, and materials of the apartment building. Additional amendments include encroaching into the front and side yard setback, allowing a building height over 45 feet and a parking reduction, as permitted by State Density Bonus Law through waivers.

b. Density Bonus Permit to ensure compliance with State Density Bonus law and ensure the project eligibility for certain concessions, waivers, and parking incentives under State Density Bonus Law. Furthermore, the application proposed to modify the previous entitlement that reserved 31 apartment units for low-income households and 44 apartment units for moderate-income households (totaling 75 affordable housing units) into reserving all 75 residential units for either low or very low-income households.

WHEREAS, the Project is exempt pursuant to CEQA Guidelines Section 15162 (Subsequent EIRs and Negative Declaration) which is permitted when an EIR has been certified or a negative declaration adopted for a project, and therefore no subsequent EIR shall be prepared so long as the lead agency can demonstrate if changes to a project warrant a subsequent negative declaration, addendum, or no further documentation; and

WHEREAS, the Planning Department recommends the Planning Commission determine this Project is found to be consistent with the goals, policies, and regulations of the California Density Bonus Law (Government Code Section 65915 et seq.), Milpitas General Plan 2040, and Milpitas Zoning Ordinance, specifically Milpitas Municipal Code Section XI-10-54.15 (Density Bonus for Affordable Housing Developments), which continues to allow an exception of the distribution requirement of affordable units for a project that better serves the affordable housing need in the City and permits waivers and concessions to development standards to facilitate development of the project, as analyzed and documented in the staff report; and

WHEREAS, the Planning Commission is an advisory body to the City Council pursuant to Milpitas Municipal Code Section XI-10-64.03 (Consideration of Concurrent Applications), where, as here, a Density Bonus Permit pursuant to Milpitas Municipal Code Section XI-10-54.15is required, and the City Council is the highest review authority for the Project and, accordingly, all review by other bodies with approval authority over the application shall be in the form of a recommendation to the City Council; and

WHEREAS, the Planning Commission has reviewed the draft "Resolution of the City Council of the City of Milpitas Approving Site Development Amendment Permit No. SA24-0005 and Density Bonus Permit No. DB24-0002 for 1355 California Circle," attached hereto and incorporated herein as **Exhibit "A";** and

WHEREAS, the Planning Commission makes and accepts as its own the findings set forth in **Exhibit "A"** attached hereto; and

WHEREAS, on February 12, 2025, the Planning Commission held a noticed public hearing on the Project, at which time the Commission considered a written staff report, and all other oral and written comments presented to them; and

WHEREAS, the findings and conclusions made by the Planning Commission pursuant to this Resolution are based upon the oral and written evidence before it as a whole.

NOW, THEREFORE, the Planning Commission of the City of Milpitas hereby finds, determines, and resolves as follows:

1. The recitals set forth above are adopted as further findings of the Planning Commission.

2. The Planning Commission determines the project should be found exempt from further environmental review pursuant to CEQA Guidelines Section 15162 (Subsequent EIRs and Negative Declaration) and recommends that the City Council

so make this finding. The previously certified Final Environmental Impact Report (FEIR) (SCH#2022110251) for the 1355 California Circle Project remains a sufficient environmental analysis for the project as amended, and the mitigation measures, including the mitigation monitoring and reporting program therein established, should be adopted as conditions of the project approval.

3. Having likewise reviewed and considered the documents attached hereto and incorporated herein as **Exhibit "A"**, and having adopted the findings set forth therein as its own, the Planning Commission recommends that the City Council approve and adopt **Exhibit "A"**, subject to any minor technical or clerical revisions that may be necessary or appropriate.

PASSED AND ADOPTED at a regular meeting of the Planning Commission of the City of Milpitas on February 12, 2025:

_____

Chair

TO WIT:

I HEREBY CERTIFY that the following resolution was duly adopted at a regular meeting of the Planning Commission of the City of Milpitas on February 12, 2025, and carried by the following roll call vote:

COMMISSIONER	**AYES**	**NOES**	**ABSENT**	**ABSTAIN**
Chia Ling Kong				
Michael Caulkins				
Mercedes Albana				
Dipak Awasthi				
Alexander Galang				
Parveen Gupta				
Sonia Medina-Ashby				

EXHIBIT 'A'

RESOLUTION NO. _____

A RESOLUTION OF THE CITY COUNCIL OF THE CITY OF MILPITAS APPROVING SITE DEVELOPMENT PERMIT AMENDMENT NO. SA24-0005 AND DENSITY BONUS PERMIT NO. DB24-0002 TO MODIFY A PREVIOUSLY APPROVED 75-UNIT APARTMENT BUILDING, DEVELOP 86 VEHICLE PARKING SPACES, TWO ROOFTOP AMENDITY AREAS, AND ASSOCIATED SITE IMPROVEMENTS WITHIN THE "1355 CALIFORNIA CIRCLE PROJECT" ON A 0.94-ACRE PARCEL AT 1355 CALIFORNIA CIRCLE AND MAKING THE FINDING OF CEQA EXEMPTION

WHEREAS, the City of Milpitas, California (the "City") is a municipal corporation, duly organized under the constitution and laws of the State of California; and

WHEREAS, California Government Code Section 65800 et seq. authorizes the adoption and administration of zoning laws, ordinances, rules, and regulations by cities as a means of implementing the General Plan; and

WHEREAS, Section 3.03 of Chapter 10 Zoning of Title XI of the Milpitas Municipal Code, divides the City into zoning districts; and

WHEREAS, on November 7, 2023, the City Council of the City of Milpitas approved a development of a multi-family residential project consisting of 13 residential buildings, up to 51-feet in height, and one residential apartment building, up to 78-feet in height, for a total of 206 residential units, with 393 vehicle parking spaces, a 0.32-acre internal park, and associated site improvements located at 1355 California Circle ("the 1355 California Circle Project") submitted by Pulte Homes Company LLC ("Applicant"). The approval included the following entitlements:

i. General Plan Text Amendment (GP22-0001): To remove language associated with the California Circle Specific Plan within the General Plan 2040 by amending the Neighborhood Commercial Mixed-Use (NCMU) designation (pg. LU-6), removing the "California Circle Specific Plan Overlay" statement (pg. LU-8) and amending Action LU-2b (pgs. LU-17 and LU-18).

j. Zoning Map Amendment (ZA22-0001): To amend the zoning map to change the property zoning designation from Industrial Park (MP) to Mixed-Use District (MXD).

k. Site Development Permit (SD22-0003) to allow the development of a multi-family residential project consisting of 13 residential buildings, up to 51 feet in height, and one residential apartment building, up to 78 feet in height, for a total of 206 residential units on a 6.7-acre site.

l. Conditional Use Permit (UP22-0001) to allow for condominium use, associated subdivision, and tandem parking.

m. Vesting Tentative Map (MT22-0001) to establish 14 lots, 131 residential condominium spaces, and related common areas.

n. Density Bonus Permit (DB23-0003) to ensure compliance with State Density Bonus law and regulations and grant a modification of the distribution requirement so affordable units can be constructed in the apartment building only.

o. Tree Removal Permit (TR23-0021) to remove 27 ordinance-sized trees and replace them with 269 new trees.

p. Environmental Assessment (EA22-0002: To review and assess all requested entitlements for consistency with the California Environment Quality Act (CEQA).

WHEREAS, in order to evaluate and approve the 1355 California Circle Project under the California Environmental Quality Act ("CEQA," codified at Public Resources Code § 21000, et seq., as further governed by the CEQA Guidelines, found at 14 C.C.R. § 15000, et seq.), an environmental impact report was prepared (the Draft EIR, as revised by the Final EIR's errata section, together with the other sections of the Final EIR, are collectively referred to herein as the "EIR," State Clearinghouse No. 2022110251); and

WHEREAS, on November 7, 2023, the City Council of the City of Milpitas certified the EIR for the 1355 California Circle Project by making environmental findings pursuant to CEQA and adopting a statement of overriding considerations and a mitigation monitoring program; and

WHEREAS, on September 12, 2024, Pulte Homes Company LLC submitted an application to the City of Milpitas to modify the physical elements of the residential apartment building ("Project") previously approved within the 1355 California Circle Project. The Project requires approval of the following entitlements:

a. Site Development Permit Amendment to change the overall design of the previously approved apartment building by lowering the height (from approximately 78 feet and six stories to approximately 65 feet and five stories), increasing the residential floor area (84,097 square feet compared to 66,767 square feet), modifying the unit type (replace 16 studios, 40 one-bedroom units, and 19 two-bedroom units with 30 one-bedroom units, 21 two-bedroom units, and 24 three-bedroom units), increase the number of vehicle parking spaces (from 85 parking spaces to 86 parking spaces) and changing the design, colors, and materials of the apartment building. Additional amendments include encroaching into the front and side yard setback, allowing a building height over 45 feet and a parking reduction, as permitted by State Density Bonus Law through waivers.

b. Density Bonus Permit to ensure compliance with State Density Bonus law and ensure the project eligibility for certain concessions, waivers, and parking incentives under State Density Bonus Law. Furthermore, the application proposed to modify the previous entitlement that reserved 31 apartment units for low-income households and 44 apartment units for moderate-income households (totaling 75 affordable housing units) into reserving all 75 residential units for either low or very low-income households.

WHEREAS, the Project is exempt pursuant to CEQA Guidelines Section 15162 (Subsequent EIRs and Negative Declaration) which is permitted when an EIR has been certified or a negative declaration adopted for a project, and therefore no subsequent EIR shall be prepared so long as the lead agency can demonstrate if changes to a project warrant a subsequent negative declaration, addendum, or no further documentation; and;

WHEREAS, the Planning Department recommends the City Council determine this Project is found to be consistent with the goals, policies, and regulations of the California Density Bonus Law (Government Code Section 65915 et seq.), Milpitas General Plan 2040, and Milpitas Zoning Ordinance, specifically Milpitas Municipal Code Section XI-10-54.15 (Density Bonus for Affordable Housing Developments), which continues to allow an exception of the distribution requirement of affordable units for a project that better serves the affordable housing need in the City and permits waivers and concessions to development standards to facilitate development of the project, as analyzed and documented in the staff report; and

WHEREAS, the Planning Commission is an advisory body to the City Council pursuant to Milpitas Municipal Code Section XI-10-64.03 (Consideration of Concurrent Applications), where, as here, a Density Bonus Permit pursuant to Milpitas Municipal Code Section XI-10-54.15is required, and the City Council is the highest review authority for the Project and, accordingly, all review by other bodies with approval authority over the application shall be in the form of a recommendation to the City Council; and

WHEREAS, on February 12, 2025, the Planning Commission held a duly noticed public hearing, during which meeting the Planning Commission considered the categorial exemption as well as the Site Development Permit Amendment No. SA24-0005 and Density Bonus Permit No. DB24-0002 for 1355 California Circle Modified Apartment Building, heard a presentation from staff; and had the opportunity to hear from members of the public and closed the public hearing on the item; and

WHEREAS, by adoption of Resolution No. 25-003, the Planning Commission recommended that the City Council approve Site Development Permit Amendment SA24-0005 and Density Bonus Permit DB24-0002 for 1355 California Circle Modified Apartment Building; and

WHEREAS, the documents and other materials which constitute the record of proceedings upon which the City Council bases the recommendation and the findings contained within this Resolution are available and may be reviewed at Milpitas City Hall, located at 455 E. Calaveras Boulevard, Milpitas, California 95035; and

WHEREAS, on _____, the City Council held a duly-noticed public hearing, during which meeting the City Council considered the Site Development Permit Amendment SA24-0005 and Density Bonus Permit DB24-0002 for 1355 California Circle Modified Apartment Building, heard a presentation from staff, and had the opportunity hear from members of the public; and

WHEREAS, the findings and conclusions made by the City Council pursuant to this Resolution are based upon the oral and written evidence before it as a whole; and

WHEREAS, all other legal prerequisites to the adoption of this Resolution have occurred.

NOW, THEREFORE, the City Council of the City of Milpitas hereby finds, determines, and resolves as follows:

SECTION 1. Recitals

The City Council has duly considered the full record before it, which may include but is not limited to such things as the published staff report, oral and written testimony by staff, the Planning Commission, City Council and the public, and other materials and evidence submitted or provided to it. Furthermore, the recitals set forth above are found to be true and correct and are incorporated herein by reference.

SECTION 2. Record

The location and custodian of the documents or other material which constitute the record of proceedings upon which this decision is based is within the Planning Department, City of Milpitas, 455 East Calaveras Boulevard, Milpitas, California 95035

SECTION 3. California Environmental Quality Act (CEQA)

This Project is exempt from further environmental review under the California Environmental Quality Act (CEQA) pursuant to CEQA Guidelines Section 15162 (Subsequent EIRs and Negative Declarations) which states that when a EIR has been certified or a negative declaration has been adopted for a project, no subsequent EIR shall be prepared for the that project unless the lead agency determines, on the basis of substantial evidence in the light of the whole record, that either a substantial change (as described per CEQA Guidelines Section 15162 (a)(1) and (2)) or new information of substantial importance (as described per CEQA Guidelines 15162 (a)(3)(A)(B)(C)) have occurred. No substantial change or no information of substantial importance has been determined based on the analysis of the proposed modification. The previously certified Final Environmental Impact Report (FEIR) (SCH#2022110251) for the 1355 California Circle Project remains a sufficient environmental analysis for the project as amended, and the mitigation measures, including the mitigation monitoring and reporting program therein established, should be adopted as conditions of the project approval.

SECTION 4. Development Fees

The Project is subject to the Parkland Impact Fee and the Public Art Fee. The City Council finds and determines, based upon the full record before it, including studies, analysis, and approvals supporting the adoption of these fees that there is an essential nexus between these fees and the Project and these fees are roughly proportional to the Project's impact on the City's land use and other interests.

The purposed of the Parkland Impact Fee, as adopted on June 15, 1976, by Ordinance No. 18.17 and amended thereafter, is to finance open space for park or recreational purposes as a

condition of approval of a subdivision map as contemplated by the Subdivision Map Act. The city has adopted a General Plan containing a Recreation Element with definite principles and standards for the park and recreational facilities to serve the residents of the city and through this obligation requires dedication of land, payment of a fee, or both to proportionately contribute to this plan and provide park and recreational facilities to serve future residents of such subdivision. The Project will be supported by the infrastructure financed by the Parkland Impact Fee. The Council finds that an essential nexus exists between the basic public infrastructure facilities financed by the fee and the Project, which those facilities will support.

In adopting and updating over time the Parkland Impact Fee, the City relied upon studies to ensure that each project would pay only its fair share of the basic public infrastructure facilities. The City found and determined through this study that the public interest, convenience, health, welfare, and safety require that eighteen and one-half (18-½) acres of property, for each one thousand (1,000) persons residing within this City, be devoted to park and recreational purposes. This fee is made proportionate to the population of each project and the consequent increase in infrastructure for this additional residential need. The land and fees received are used only for the purpose of providing park and recreational facilities to serve the subdivision for which received, and the location of the land and amount of fees bear a reasonable relationship to the use of the park and recreational facilities by the future inhabitants of the subdivision. The Council finds that Parkland Impact Fee is roughly proportional to the Project's impact on the City's land use interest.

The purpose of the Public Art Fee, as adopted on May 19, 2015, by Ordinance No. 38.821, promote the aesthetics and arts in the City of Milpitas by requiring the inclusion of a public artwork component in new private development projects in Milpitas. Developers may either include publicly accessible works of art of placement in the development itself or contribute a Public Art Program In-Lieu Contribution as a condition of project approval. This obligation therefore should foremost provide a direct public infrastructure improvement in the Project itself and only require contribution at the applicant's decision not to install improvements within the Project. The Council finds that an essential nexus exists between the basic public infrastructure facilities financed by the fee and the Project, which those facilities will support.

In adopting the Public Art Fee, the City relied upon studies to ensure that each project would pay only its fair share of the basic public infrastructure facilities. The City found and determined through this study that the public interest, convenience, health, welfare and safety require that private residential building developments of 20 or more new dwelling units shall devote an amount not less than one-half of one percent of Building Development Costs for acquisition and installation of Publicly Accessible Art on the development site. This obligation therefore proportionally requires the developer to contribute proportionately in the first instance to the aesthetics and arts for the Project itself. The Council finds that the Public Art Fee is roughly proportional to the Project's impact on the City's land use interest.

SECTION 5. Site Development Amendment Permit

The City Council makes the following findings based on the evidence in the public record in support of Site Development Permit No. SA24-0005, as referenced as "1355 California Circle Modified Apartment Building," dated November 18, 2024, on file with the Planning Department:

1. *The layout of the site and design of the proposed buildings, structures and landscaping are compatible and aesthetically harmonious with adjacent and surrounding development.*

   The 1355 California Circle Project consists of 131 townhome condominium units and 75 apartment units and associated site amenities on a 6.7-acre site. The proposed modification of the apartment building structure within the 1355 California Circle Project will remain compatible with the townhome condominium design. The previously approved townhome and redesigned apartment building will incorporate contemporary architectural features consistent with residential structures along California Circle. The modified apartment building height will be approximately 65 feet, consistent with the approximately 40 feet tall townhome structures in the immediate area. The modified apartment building maintains a strong relationship to the street in that its primary entrance is oriented toward the street. The building's design features exterior plaster walls, vinyl windows, accented with brick veneer along the ground floor, along with an aluminum storefront system to create an aesthetically harmonious development.

2. *The Project is consistent with the Milpitas Zoning Ordinance.*

   The proposed modification is generally consistent with the Milpitas Zoning Ordinance and MXD zoning standards, as demonstrated in Table 1, below:

Table 1: Summary of MXD Development Standards

Development Standard (MXD)	Minimum Required	Proposed	Conformance
Density	21-30 du/ac	30.8 du/acre (for the 6.7-acre site, as contemplated for the entire project)	Yes, *with Density Bonus*
Front Yard Setback (east)	Minimum of 8 feet and a maximum of 15 feet from back of sidewalk.	4 feet, 9 inches to 13 feet, 7 inches	Yes, *with Density Bonus Waiver*
Side Yard Setback (north)	10 feet	14 feet, 6 inches	Yes
Side Yard Setback (south)	10 feet	4 feet, 5 inches	Yes, *with Density Bonus Waiver*

Development Standard (MXD)	Minimum Required	Proposed	Conformance
Rear Yard Setback (west)	10 feet	11 feet	Yes
Height	3 stories and 45 feet	~65 feet	Yes, *with Density Bonus Waiver*
Landscaping	All required front and street setback areas shall be landscaped or paved to allow for outdoor seating, display or goods, or street furniture	All required front and street setback areas are landscaped or paved	Yes
Parking	1 bedroom: 1.5 per unit (45 spaces) 2-3 bedrooms: 2 per unit (90 spaces) Guest: Projects with parking structures: 15 percent of the total required. (20 spaces) **Total – 155 spaces**	86 spaces	Yes, *with Density Bonus Parking Reduction Incentive*
Bicycle Parking	5 percent of the total required Total: 8	8	Yes

The proposed multi-family residential building is permitted in the MXD zoning district. The project design conforms to the site and development standards of the MXD zone. The apartment modification also conforms with MMC Section XI-10-54.015 (Density Bonus for Affordable Housing Developments) and XI-10-57.05 (Density Bonus Permits). Where exceptions from the MXD standards are needed, the applicant has requested waivers and parking exceptions pursuant to the State Density Bonus Law (Gov. Code § 65915 et seq.). The requested waivers and parking exception will support the development of affordable housing on a site where it would not otherwise be possible through a strict application of the specified zoning standard.

3. The Project is consistent with the Milpitas General Plan

   The proposed Project is consistent with the Milpitas General Plan as demonstrated and outlined in Table 2, below:

Table 2: General Plan Consistency

Policy	Conformance
Policy LU 1-4: *Continue to provide for a variety of housing types and densities that meet the needs of individuals and families and offer residents of all income levels, age groups, and special needs sufficient housing opportunities and choices for locating in Milpitas.*	**Consistent.** The development includes a total of 206 new housing units, with 75 of those units within the previously approved apartment building. All 75 units would be rental units and offered at a below-market rate. The Project Applicant would allow Milpitas Unified School District Employees (MUSD) first right of refusal for the 75 apartment units, consistent with City policy to provide a variety of housing types for individuals and families of all types of income.
Policy LU 4-4: *Encourage new development to facilitate pedestrian, bicycle and transit access through techniques such as minimizing building separation from public sidewalks; providing safe, direct, accessible, convenient, and pleasant pedestrian connections; including secure and convenient bike storage; and orienting building entrances to transit service.*	**Consistent**. Approving the proposed apartment modification would not impact the investment into pedestrian, bicycle and transit access. The developer has designed the project to maintain the existing sidewalks and develop interior walkways to support pedestrian travel. Bicycle parking will also be developed and bicycle storage areas have been identified in the modified apartment building. Lastly, a pedestrian crosswalk across California Circle will remain, providing pedestrian access to nearby walking trails and a future public park within the new development.
Policy LU 2-3: *Allow densities and intensities which exceed the generally allowed ranges defined by the underlying land use for projects utilizing Density Bonus provisions (included within the Milpitas Affordable Housing Ordinance Title XII - HOUSING Chapter 1 - AFFORDABLE HOUSING ORDINANCE) including bonuses for senior housing, affordable housing, and for projects within designated overlay districts included in*	**Consistent.** The apartment modification includes a proposal to provide all 75 residential units to either low or very-low-income individuals or families, consistent with the GP policy to support density bonuses for affordable housing.

Policy	Conformance
Milpitas Municipal Code Section 12 - Overlay Districts and Standards	

Furthermore, as the Project is an eligible housing project under State Density Bonus Law, Government Code Section 65915(p)(5), the Project is entitled to waivers, concessions and incentives. The requested waivers and parking incentives will support the development of affordable housing units on a site where it would not otherwise be possible through a strict application of the specific standard.

SECTION 6. Density Bonus Permit

The City Council makes the following findings based on the evidence in the public record in support of Density Bonus Permit No. DB24-0002, as referenced as 1355 California Circle Modified Apartment," dated November 18, 2024, on file with the Planning Department:

1. *The maximum allowable base density specified in the General Plan, including any other permitted increases in density*

   The previously approved development includes 131 townhome condominiums and 75 apartment units, equaling to 30.8 dwelling units per acre, meeting the General Plan density allowed the NCMU land use designation. The proposed modification will not affect the total number of units or density.

2. *All affordable units shall be reasonably dispersed throughout the project, shall contain on average the same number of bedrooms as the non-affordable units in the project, and shall be comparable with the non-affordable units in terms of appearance, materials and finished quality. The Planning Commission may recommend to the City Council and/or Redevelopment Agency modifying the requirements as to unit size or type, if it is found that such a modification would better serve the affordable housing need of Milpitas.*

   The previously approved development received an exception to this standard. Instead of providing 19 affordable townhome condominiums and 11 affordable apartment unit (15 percent of the total number of dwelling units), the applicant reserved 31 apartment units for lower-income households and 44 apartment units for moderate-income households, bringing the total BMR contribution to 36.4 percent of the total number of dwelling units, adding 44 additional deed restricted units to it's the City of Milpitas's affordable housing stock and helping the City meet its Regional Housing Needs Allowance (RHNA). The proposed modification will reserve all 75 apartment units to either low or very low-income households,

further increasing the affordable housing stock to all income level households. Furthermore, the developer has committed to working with Milpitas Unified School District to market housing opportunities for their employees.

3. *Prior to final building inspection and occupancy for a project containing affordable units, the applicant shall execute and record at the Santa Clara County Recorder's Office the City's Agreement Imposing Restrictions on Real Property, which Agreement shall explain the affordability requirements. The agreement shall be approved by the Milpitas City Attorney prior to recordation.*

   The Project has been conditioned to provide an agreement to the City of Milpitas explaining the affordability requirements, processes and procedures, to the satisfaction of the Milpitas City Attorney prior to the release of any Certificate of Occupancy.

4. *Retaining Affordability. A developer shall agree to, and the City shall insure continued affordability of, all lower- or very low-income density bonus units for thirty (30) years or a longer period of time, if required by the construction or mortgage financing assistance program, mortgage insurance program, or rental subsidy program.*

   Prior to final building inspection and occupancy for the modified apartment building, the applicant shall execute and record at the Santa Clara County Recorder's Office the City's Agreement Imposing Restrictions on Real Property, which Agreement shall explain the affordability requirements, including continued affordability for low and very low-income households. The agreement shall be approved by the Milpitas City Attorney prior to recordation.

5. *Affordable Rents. Those units targeted for lower-income households, as defined in Section 50079.5 of the Health and Safety Code shall be affordable at a rent that does not exceed thirty (30%) of sixty (60%) percent of the Santa Clara County median income. Those units targeted for very low-income households, as defined in Section 50105 of the Health and Safety Code, shall be affordable at a rent that does not exceed thirty (30%) of fifty (50%) percent of County median income.*

   All 75 apartment units will be targeted to either low or very low income households, as defined in Section 50079.5 of the Health and Safety Code, which states that lower-income households shall be affordable at a rent that does not exceed thirty (30%) of sixty (60%) percent of the Santa Clara County median income and units targeted to very low-income households, as defined in Section 50105 of the Health and Safety Code, shall be affordable at a rent that does not exceed thirty (30%) of fifty (50%) percent of County median income.

6. *Relation to Statute. Density bonus requirements not specified in these regulations shall be governed by the State Density Bonus Law, Government Code section 65915, et seq.*

   Any density bonus requirements not specified in the City's Municipal Code shall be governed by the State Density Bonus Law, Government Code Section 65915, et seq.

Density Bonus Concessions, Incentives and Waivers

In accordance with California Government Code Section 65915 and MMC Section X-10-54.15, the City must grant the requested incentives/concessions unless the City can make either of the following findings in writing and based on substantial evidence:

a. *The concession is not required in order to provide for affordable housing costs as defined in State Health and Safety Section 50052.2 or for rents for the affordable units pursuant to Section XI-10-54.15(D)(5), Standards, of Chapter 10 (Zoning) of the Milpitas Municipal Code.*

b. *The concession would have a specific adverse impact as defined in State Government Code Section 65589.5(d) (2) upon the public health and safety or the physical environment, or on any real property that is listed in the California Register of Historical Resources and for which there is no feasible method to satisfactorily mitigate or avoid the specific adverse impact without rendering the development unaffordable to low- and moderate-income households*

If findings cannot be made, then the proposed concessions/incentives and waivers must be granted, based on the requirements of the City's Municipal Code and California Government Code Sections 65915 – 65918.

The City does not have substantial evidence to demonstrate that the concessions/incentives and waivers described in Table 3, below, would fail to result in actual and identifiable cost savings, and/or that these savings are unnecessary to provide the level of affordability proposed. Moreover, the City has no substantial evidence that any of the requested concessions, incentives or waivers would result in any specific, adverse impacts to public health, safety, the physical environment, or historical resources. Accordingly, the City Council hereby approves such requested concessions/incentives and waivers.

Table 3: State Density Bonus – Concessions, Waivers and Incentives

Type of Modification	Standard	Applicant Request	Justification	Waiver Previously Requested	Discretion
Waiver for Front Setback	Minimum 8 feet, Maximum 15 feet	4 feet, 9 inches to 13 feet, 7 inches	A lesser front yard setback provides the developer greater floor area to increase affordable units on-site.	Yes	This waiver is allowed under State Density Bonus Law and must be granted by the city.

Type of Modification	Standard	Applicant Request	Justification	Waiver Previously Requested	Discretion
Waiver for Side Setback	10 feet	4 feet, 5 inches	The reduced side setback is needed to comply with Fire requirements for adequate space to maneuver aerial apparatus along the northern property line.	No	This waiver is allowed under State Density Bonus Law and must be granted by the city.
Waiver for Building Height	3 stories and 45 feet	5 stories and 65 feet	A greater height provides the developer more floor area to increase affordable units on-site.	Yes	This waiver is allowed under State Density Bonus Law and must be granted by the city.
Parking Reduction Incentive	155 spaces (Pursuant to MMC Section XI-10-53.09)	86 spaces	State Density Bonus Law dictates minimum parking standards for qualifying affordable housing developments.	Yes	This parking reduction is allowed under State Density Bonus Law and must be granted by the city.

SECTION 7. Affordable Housing Ordinance Exception

The City Council may allow an exception to the requirement to construct on-site affordable units for a residential ownership project when the applicant contributes to the City's affordable housing needs through one of the alternatives set forth in MMC Sections XII-1-4.00-XII-1-4.02,

provided that prior to City Council approval to the requested exception, the City Council must make the following findings:

1. *The development as proposed with the exception as provided pursuant to this Section would further the City's low and/or moderate-income housing goals as contained in the Housing Element; and*

   In order to comply with this section, the ordinance requires the Project to provide 19 townhomes, as moderate-income, and 11 apartment units, as low-income, for affordable housing, for a total of 31 affordable housing units. The applicant proposes to deviate from the ordinance and meet the City's affordable housing requirement by not reserving any townhome units but reserving 75 apartment units for either low or very low-income households, exceeding the 15 percent requirement of the total number of dwelling units. By granting this exception, the City would add 75 affordable housing units into the Milpitas housing stock which supports the City's RHNA obligation.

2. *The development with the exception either (i) will result in at least two of the following:*

   a) The development of a larger number of deed-restricted affordable units than would be created under the on-site requirement;
   b) The development of a larger number of deed-restricted affordable bedrooms than would be created under the on-site requirement;
   c) The development of a larger amount of deed restricted affordable living area than would be created under the on-site requirement;
   d) The development of deed-restricted affordable units at a lower average income target as compared to the affordable units that would be created under the on-site requirement;

   or (ii) will provide other community benefits that exceed the benefit of constructing on-site affordable units.

   The proposed development, with the exception, will result in a larger number of deed-restricted affordable bedrooms and a larger amount of deed-restricted affordable living area than would be created under the on-site requirement. The total number of bedrooms under the applicant's modification would be 144, whereas the required number would be 74 bedrooms. The total square footage of living space under the applicant's modification would be 61,250, whereas the required amount of living space would be 41,548 square feet. Lastly, the developer has committed to working with Milpitas Unified School District to provide housing opportunities for their employees.

SECTION 8. Severability

If any section, subsection, sentence, clause, phrase, or portion of this Resolution is for any reason held incorrect, invalid, illegal, or unenforceable, such decision shall not affect the validity of the remaining portions of this Resolution. The City Council hereby declares that it would have passed each section, subsection, phrase, or clause thereof irrespective of the fact that any one or

more sections, subsections, phrases or clauses be declared incorrect, invalid, illegal, or unenforceable.

SECTION 9. City Council Approval

The City Council hereby approves Site Development Permit Amendment No. SD24-0005 and Density Bonus Permit No. DB24-0002 (subject to the Conditions of Approval attached hereto and incorporated herein as **Exhibit "1"**) based on the above findings.

PASSED AND ADOPTED this _____ day of _____ 2025, by the following vote:

AYES:

NOES:

ABSENT:

ABSTAIN:

ATTEST: APPROVED:

_____ _____

Suzanne Guzzetta, City Clerk Carmen Montano, Mayor

APPROVED AS TO FORM:

_____

Christopher Creech, Acting City Attorney

EXHIBIT '1'

CONDITIONS OF APPROVAL

PULTE HOMES AFFORDABLE APARTMENTS MODIFICATION, WHICH INCLUDES THE DEVELOPMENT OF A U-SHAPED, MODERN ARCHITECTURAL APARMENT BUILDING, APPROXIMATELY 65 FEET (FIVE-STORIES) IN HEIGHT, A UNIT MIX OF 30 ONE-BEDROOM UNITS, 21 TWO-BEDROOM UNITS, AND 24 THREE-BEDROOM UNITS (TOTALING 75 UNITS) RANGING IN SIZE BETWEEN 600 TO 1,043 SQUARE FEET, WITH 86 VEHICLE PARKING SPACES, AND ALL UNITS DESIGNATED FOR EITHER LOW (51-80 PERCENT AREA MEDIAN INCOME) OR VERY LOW-INCOME (31-50 PERCENT AREA MEDIAN INCOME) HOUSEHOLDS

SITE DEVELOPMENT AMENDMENT PERMIT NO. SA24-0005
DENSITY BONUS PERMIT NO. DB24-0002

GENERAL CONDITIONS

1. General Compliance: The Permittee and owner, including all successors in interest (collectively "Permittee") shall comply with each and every condition set forth in this Permit known as "1355 California Circle Modified Apartment", dated November 18, 2024, on file with the Planning Department and all conditions within **Resolution #9283 (Exhibit '2')**. This **Site Development Amendment Permit No. SA24-0005 and Density Bonus Permit No. DB24-0002** (collectively "Permit") shall have no force or effect, and no building permit shall be issued for the apartment building, unless and until all things required by the below-enumerated precedent conditions have been performed or caused to be performed. The Permittee shall develop the site in accordance with the approved Attachments and as modified by these Conditions of Approval, and in compliance with the 1355 California Circle Project Mitigation Monitoring Plan (MMP), as demonstrated in the 1355 California Circle Project FEIR.

2. Effective Date: Unless there is a timely appeal filed in accordance with the Milpitas Zoning Code, the date of approval of this Permit is the date on which the City Council approved this Permit.

3. Acceptance of Permit: Should Permittee fail to file a timely appeal within twelve (12) calendar days of the date of approval of this Permit, inaction by Permittee shall be deemed to constitute each of the following:
    a. Acceptance of this Permit by Permittee; and
    b. Agreement by the Permittee to be bound by, comply with, and to do all things required of or by Permittee pursuant to all of the terms, obligations, and conditions of this Permit.

4. Permit Expiration: Pursuant to Section XI-10-64-06 of the Milpitas Municipal Code, this Permit shall become null and void if the activity permitted by this Permit is not commenced

within two (2) years from the date of approval, or for a project submitted with a tentative map, within the time limits of the approved tentative map. Pursuant to Section XI-10-64.06(B) of the Milpitas Municipal Code, an activity permitted by this Permit shall be deemed to have commenced when the Project:

a. Completes a foundation associated with the Project; or
b. Dedicates any land or easement as required from the zoning action; or
c. Complies with all legal requirements necessary to commence the use, or obtains an occupancy permit, whichever is sooner.

5. Time Extension: Pursuant to Section XI-10-64.07 of the Milpitas Municipal Code, unless otherwise provided by State law, Permittee shall have the right to request a one-time extension of the Permit if the request is made in writing to the Planning Division prior to the expiration date of the approval. **(P)**

6. Project Job Account: If Permittee's project job account is at any time delinquent or below the required deposit amount, City will not continue to review or process the application until Permittee's project job account is paid in full and the required deposit has been made. Additionally, prior to the issuance of any building permit or occupancy permit as applicable, Permittee shall pay in full the Project account balance and establish a remaining balance of at least twenty-five percent (25%) of the required initial deposit. **(P/E)**

7. Notice: Pursuant to California Government Code Section 66020, any protest filed in court relating to the imposition of fees, dedication, reservations, or other exactions to be imposed on the development project shall be filed within ninety (90) days after the date of the adoption of this Resolution. This provision serves as notice from the local agency to the Permittee that the ninety (90) day period in which the Permittee may file a protest has begun under California Government Code Section 66020(d)(1).

8. Cost and Approval: Permittee shall fully complete and satisfy each and every condition set forth in this Resolution and any other condition applicable to the Project to the sole satisfaction of the City. Additionally, Permittee shall be solely responsible and liable for the cost to satisfy each and every condition. **(ALL)**

9. Conditions: Each and every condition set forth in this Exhibit shall apply to the Project and continue to apply to the Project so long as the Project is operating under the permits and approvals in this Resolution. **(ALL)**

10. Compliance with Laws: The construction, use, and all related activity authorized under this Permit shall comply with all applicable local, state and federal laws, rules, regulations, guidelines, requirements and policies. **(CAO/P/E/B)**

11. Indemnification: To the fullest extent permitted by law, Permittee shall indemnify, defend with counsel of the City's choosing, and hold harmless City, its City Council, its boards and commissions, officials, officers, employees and agents from and against any and all claims, demands, obligations, damages, actions, causes of action, suits, losses, judgments, fines, penalties, liabilities, costs and expenses (including without limitation, attorney's fees,

disbursements and court costs) of every kind and nature whatsoever which may arise from or in any manner relate (directly or indirectly) to (i) City's approval of the project, including, but not limited to, the approval of the discretionary permits, the approval of any waivers, exemptions, alternatives, modifications, or amendments to the City's General Plan or Municipal Code, maps under the Subdivision Map Act, and/or the City's related determinations or actions under the California Environmental Quality Act, and (ii) Permittee's construction, operation, use or related activity under this Permit. This indemnification shall include, but not be limited to, damages awarded against the City, if any, costs of suit, attorneys' fees, and other expenses incurred in connection with such claim, action, causes of action, suit or proceeding whether incurred by Permittee, City and/or the parties initiating or bringing such proceeding. Permittee shall indemnify the City for all of City's costs, attorneys' fees and damages, which City incurs in enforcing the indemnification provisions set forth in this condition. Permittee shall pay to the City upon demand or, as applicable, to counsel of City's choosing, any amount owed pursuant to the indemnification requirements prescribed in this condition. The above indemnification is intended to be as broad as permitted by applicable law. To the extent the above indemnification is limited by Government Code Section 66474.9, any limitations shall only apply to Vesting Tentative Map No. MT22-0002 (approved on November 7, 2023), and the balance of the Permit shall be unaffected by Government Code Section 66474.9.

12. Certificate of Insurance: Permittee shall provide certificate of insurance and name City as an additional insured in its insurance policies for the Project.

13. Revocation, Suspension, Modification: This Permit may be suspended, revoked or modified in accordance with Section XI-10-63.06 of the Milpitas Municipal Code.

14. Severability: If any term, provision, or condition of this Permit is held to be illegal or unenforceable by the Court, such term, provision or condition shall be severed and shall be inoperative, and the remainder of this Permit shall remain operative, binding and fully enforceable.

15. Response to Conditions of Approval: Permittee shall provide a written response to comments upon submittal for building permit application. The responses should clearly indicate how each condition of approval has been addressed in the plans and shall note the appropriate plan sheet. **(P)**

16. Compliance with Fire Department and California Fire Code: The project shall comply with the requirements of the Milpitas Fire Department and the California Fire Code, as adopted by the City. Changes to the site plan and/or buildings requires review and re-approval by the Fire Department. **(F)**

17. Compliance with Building Department and California Building Code: The project shall comply with the requirements of the Milpitas Building Department and the California Building Code, as adopted by the City. Changes to the site plan and/or buildings requires review and re-approval by the Building Department. **(B)**

18. Development in Conformance with Approved Plans: Permittee shall develop the approved Project in conformance with the plans dated November 18, 2024 and approved by the City Council on _____, in accordance with these Conditions of Approval. Any deviation from the approved site plan, elevations, materials, colors, landscape plan or other approved submittal shall require that, prior to the issuance of building permits, the Permittee shall submit modified plans and any other applicable materials as required by the City for review, and obtain the approval of the Planning Director or Designee. If the Planning Director or designee determines that the deviation is significant, the owner or designee shall be required to apply for review and obtain approval of the Planning Commission or City Council, as applicable, in accordance with the Milpitas Zoning Code. **(P)**

PLANNING CONDITIONS

19. Landscape: All approved landscaping shall be permanently maintained and replaced with substantially similar plant material as necessary to provide a permanent, attractive and effective appearance.

20. Parking: Parking shall be provided as depicted on the Site Plan approved by the City Council and shall consist of the following:

    a. RESIDENT: A total of 348 vehicle spaces within unit parking garages in both the townhome buildings and the podium building.
    b. GUEST: A total of 46 vehicle spaces are to be provided on site.

21. Bicycle Racks: A total of 22 short-term bicycle parking spaces shall be installed on the site.

22. Trees: The project will remove 27 ordinance-sized trees and replace with approximately 269 trees, in conformance with the plans approved by City Council on November 7, 2023.

23. Public Art Requirement: Permittee shall comply with the City's Public Art Requirements for Private Development, as set forth in Milpitas Municipal Code Section XI-10-14. Fee shall be no less than one-half of one percent of building development costs and shall be payable at time of building permit issuance.

24. Density Bonus: Permittee shall provide up to 206 residential units, 75 of which will be reserved for either low or very low-income households. Along with the waivers, concessions, and incentives approved on November 7, 2023, by City Council, the Project may have the following waivers, concessions and incentives:
    a. Waiver #1: Allow a 4-foot-9-inch front setback for the podium apartment building.
    b. Waiver #2: Allow a 4-foot-5-inch side yard setback for the podium apartment building.
    c. Waiver #3: Allow building height up to 65 feet.
    d. Parking reduction waiver: Provide a total of 86 parking spaces in the podium.

HOUSING CONDITIONS

25. Affordable Housing Requirement: Permittee shall comply with the City's Affordable Housing Ordinance, as set forth in Milpitas Municipal Code Section XI-1-3.00. The City Council has granted the following deviation from the City's AHO **(H)**:

    a. Permittee shall reserve 75 apartment units for either low or very low-income households consisting of
        i. 30 one-bedroom units
        ii. 21 two-bedroom units
        iii. 24 three-bedroom units

26. Affordable Housing Agreement: Prior to final building inspection and occupancy for a project containing affordable units, the applicant shall execute and record at the Santa Clara County Recorder's Office the City's Agreement Imposing Restrictions on Real Property, which Agreement shall explain the affordability requirements. The agreement shall be approved by the Milpitas City Attorney prior to recordation. **(H)**

27. Retaining Affordability. Developer shall agree to, and the City shall insure continued affordability of, all lower- or very low-income density bonus units for fifty (50) years or a longer period of time, if required by the construction or mortgage financing assistance program, mortgage insurance program, or rental subsidy program. **(H)**

ENGINEERING CONDITIONS

PRIOR TO CONSTRUCTION PLAN SUBMITTALS

*The following conditions shall be met **prior to** any detailed construction plan check submittals (Building or Engineering, except demolition and rough grade plans), unless otherwise approved by the Director of Engineering/City Engineer. City reserves the right to reject any plan check submittal if any of the following conditions are not met. **(E)***

28. Modifications: The Site Development Plan dated November 18, 2024 is subject to change during the plan check stage based upon City's previous comments and conditions stated herein.

29. Solid Waste and Recycling Handling Plan: Permittee shall submit final Solid Waste and Recycling Handling Plan based upon City's previous comments for City's review and approval by the Engineering Department Solid Waste Program. The subject Plan shall show calculations of waste generation volumes and how materials will be transferred from the waste generation areas to the trash enclosure/external collection point; demonstrate how recycling, food waste, and yard trimmings shall have a separately maintained process from garbage handling; address other requirements such as waste generation and compactor sizing, chute shut-off and property management responsibility for bin management and litter control; outreach and education to tenants/occupants, and procure sufficient service frequency based upon waste generation calculation volumes.

30. Stormwater Control Plan: Permittee shall submit City approved final Stormwater Control Plan (SWCP) that complies with the latest Municipal Regional Stormwater NPDES Permit, including Low Impact Development (LID) Section C3.c.i.(2)(b) measures for harvesting and

reuse, infiltration, or evapo-transpiration, for City's review and approval by the Engineering Department.

31. Photometric Analysis: Permittee shall submit streetlight photometric analysis for City's review and approval by the Engineering Department along California Circle that meet the Illuminating Engineering Society of North America (IESNA), RP8, for roadway and sidewalk lighting standards and City standard design guidelines.

32. Submittal Requirements: Permittee to ensure that all plan check submittals are in accordance with City's submittal check list for each permit type, including but not limited to, payment of permit fees and/or fee deposit at the time of the submittal.

33. Project Job Account/Fee Deposit: Permittee shall open a new PJ account as a deposit to cover the costs for Engineering Department's services for review and inspection of the project. The amount shall be determined based on the public improvement cost estimates as prepared by the Permittee's engineer.

34. Fair Share Payment Structure: Permittee shall negotiate a fair share payment structure with the City regarding the cost associated with the installation of sectional liners on the existing City sanitary sewer main along the California Circle project frontage.

PRIOR TO FINAL MAP APPROVAL/RECORDATION

The following conditions shall be addressed during the final map plan check process and shall be met ***prior to*** *any final approval/recordation (except demolition permit and rough grade permit), unless otherwise approved by the Director of Engineering/City Engineer.* ***(E)***

35. Dedication on the Final Map: Permittee shall dedicate necessary emergency vehicle access easements, public service utility easements, street easements, public access easement and other public easements deemed necessary for the project.

36. Abandonment/Quitclaim Easements: Permittee shall abandon/quit claim existing easements that are in conflict with or unnecessary for the project.

37. Easements on the Final Map: Permittee shall depict all existing easements to remain based upon current preliminary title report and depict new easements on the final map.

38. Concurrent Off-site Plan Reviews: Permittee shall submit separate off-site improvement plans for City's review and approval by the Engineering Department.

39. Street Name Approval: Permittee shall obtain approval from the City Council for all new street names based upon recommendation from the City Council Ad Hoc Naming Subcommittee and City guidelines.

40. Utility Company Approval Permittee shall obtain approval letters from utility companies (PG&E, AT&T, Comcast) for abandonment of existing and dedication of new public service utilities easements.

41. Demolition of Existing Building: Permittee shall demolish existing buildings/facilities that are in conflict with the new property lines.

42. Covenant, Conditions & Restrictions (CC&Rs): Permittee shall provide CC&Rs for City's review and approval for perpetual maintenance of private roadways, private utilities, stormwater management facilities in accordance with a separately recorded Stormwater Management Facilities Operation and Maintenance Agreement, etc.

43. Subdivision Improvement Agreement and Securities: Permittee shall execute a Subdivision Improvement Agreement and provide improvement securities in accordance with MMC Title XI, Section 17, and submit all other supplemental documents as stipulated in the Improvement Agreement (such as certificate of insurance.

44. Annexation to the Community Facilities District: Permittee shall submit an executed petition affirmatively consenting to annex the subject property to the Community Facilities District (CFD) 2005-1, and agree to pay the special taxes levied by the CFD 2005-1 for the purpose of maintaining the public services. The CFD annexation process shall be completed prior to final map approval. Permittee shall comply with all rules, regulations, policies and practices established by the State Law and/or by the City with respect to the CFD including, without limitation, requirements for notice and disclosure to future owners and/or residents. This condition of approval is nonseverable from the Permit and invalidation or limitation of this condition invalidates the Permit, condition 42 notwithstanding.

PRIOR TO OFF-SITE PLAN APPROVAL/ENCROACHMENT PERMIT ISSUANCE

*The following conditions shall be addressed as part of the off-site improvement plan review and shall be met **prior to** encroachment permit issuance, unless otherwise approved by the Director of Engineering/City Engineer.* ***(E)***

45. Public Improvement Design Standards: All public improvements shall be designed and constructed in accordance with all applicable public improvement design standards, including but not limited to:
    a. Milpitas Design Guidelines: (http://www.ci.milpitas.ca.gov/milpitas/departments/engineering/design-guidelines/);
    b. Standard details and specifications: (http://www.ci.milpitas.ca.gov/milpitas/departments/engineering/standard-details-and-specifications/);
    c. Americans with Disabilities Act (ADA) requirements, where applicable.

46. Sanitary Sewer Calculations: Permittee shall submit a completed "Sewer Needs Questionnaire" form and sanitary sewer calculations to justify lateral size design, allocation of discharge for each of the lateral, and impact to the existing main. Permittee shall be responsible to implement any necessary improvements if there is any identified deficiency to the existing main as a result of the project.

47. Storm Drain Design: Permittee shall submit storm drain hydrology and hydraulic calculations based upon a 10-year storm event to justify the size of the storm drain lateral flowing full, without surcharging the main line pipe, and to be reviewed and approved by the Engineering Department.

48. Domestic Water and Fire Service Calculations: Permittee shall submit potable water and fire service calculations to confirm adequacy of lateral size, pressure and flow, to be reviewed and approved by the Engineering Department and Fire Department. Hydraulic modeling analysis by the City and paid by the Permittee may be required as needed. Permittee shall be responsible to implement any necessary improvements if there is any identified deficiency to the existing main as a result of the project.

49. Specific Improvements: In addition to standard public improvements required under Milpitas Municipal Code (MMC) Title XI, Chapter 1, Section 7, Permittee shall install other specific improvements listed below including incidental improvements as required by the City as part of the encroachment permit.

    a) Installation of public (City-maintained) water and sewer mains within on-site private streets and public easements. Please ensure all horizontal and vertical separations meet the CCR title 22 requirements.
    b) Installation of separate utility service laterals (domestic water, fire service, sanitary sewer) for each residential building at minimum.
    c) Installation of irrigation water and storm drain utility service laterals for the common-green condominium community.
    d) Installation of domestic water, irrigation water, fire service, sanitary sewer, and storm drainage utility service laterals for the apartment building parcel.
    e) Installation of sectional liners on the existing City sanitary sewer main along the California Circle project frontage, development in accordance with the City of Milpitas Sewer Master Plan's recommended capital improvements for California Circle. The fair share payment structure for the sectional liner installation work will be determined prior to the issuance of the building permit.
    f) Installation of radio-transmitted water meters with a meter antenna, any repeaters or transmitters as needed with dedicated power supplies at no cost to the City at locations acceptable to the City to ensure accurate and timely reception of meter readings. Permittee shall execute a recorded instrument providing dedicated space, access rights and dedicated power supplies to the City for operation/maintenance/repair/replacement of subject radio antenna.
    g) Installation of sidewalk improvements along the project street frontage on California Circle. All sidewalk design shall comply with applicable City standards and details.
    h) Installation of new public streetlights along the project frontage. The locations and spacing of streetlights shall comply with applicable City standards and details. The developer shall procure an extra street light pole and deliver to the Public Works Corporation Yard for storage.
    i) Installation of new public streetlights along the project frontage. The locations and spacing of streetlights shall comply with applicable City standards and details.

The developer shall procure an extra street light pole and deliver to the Public Works Corporation Yard for storage.

j) AC Pavement base repair, microsurfacing and pavement restriping the full width of California Circle frontage to the satisfaction of the City Engineer.

50. Abandonment of Existing City Utilities: Permittee shall cap, abandon or remove any unused existing public utilities based upon City's Abandonment Notes and to the City's satisfaction.

51. Relocation and Adjustment of Existing Public Utilities: Permittee shall relocate and/or adjust existing public utilities as needed that are in conflict with the proposed improvements.

52. Water Service Agreement: Permittee shall complete a water service agreement to obtain water service.

53. Encroachment Permit: Prior to any work in the public right-of-way and/or public easement, obtain an encroachment permit with insurance requirements for all public improvements including a traffic control plan per the latest California Manual on Uniform Traffic Control Devices (MUTCD) standards to be reviewed and approved by the Engineering Department.

54. Pothole Encroachment Permit: Due to multiple new utility service connections along the project frontage, Permittee shall pothole and verify all potential utility crossing conflict as part of the public improvement plan during the design stage.

PRIOR TO BUILDING PERMIT ISSUANCE

*The following conditions shall be addressed during the building plan check process and shall be met **prior to** any building permit issuance (except demolition permit and rough grade permit), unless otherwise approved by the Director of Engineering/City Engineer).* ***(E)***

55. Final Map Recordation: Permittee shall record the final map.

56. Easements on the Building Permit Plans: Permittee shall depict all existing easements to remain based upon current preliminary title report and depict new easements on applicable building permit plans.

57. Stormwater Facility Operation & Maintenance Plan: Permittee shall incorporate design details into applicable construction plans in accordance with City approved Storm Water Control Plan (SWCP). Permittee shall also submit Stormwater Facility Operation & Maintenance Plan that describes operation and maintenance procedures needed to ensure that treatment Best Management Practices (BMPs) and other storm water control measures continue to work as intended and do not create a nuisance (including vector control).

58. Stormwater Management Facilities O&M Agreement: Permittee shall execute and record a Stormwater Management Facilities Operation and Maintenance (O&M) Agreement associated with the SWCP O&M Plan, including perpetual maintenance of treatment areas/units, as reviewed and accepted by the Engineering Department. The subject O&M Agreement shall be referenced in the CC&Rs, if applicable.

59. NPDES Compliance: The project shall comply with the requirements of the National Pollution Elimination Discharge System (NPDES) permit as administered by the California State Water Resources Control Board and the San Francisco Bay Regional Water Quality Control Board. The project is required to meet the performance standards within the permit. Specifically the project shall incorporate, at a minimum, stormwater treatment measures that meet the numeric sizing requirements for pollutant removal.

60. Water Supply and Force Majeure: The City reserves the right to suspend the issuance of building permits in case of an emergency declaration of water supply in the case of a major catastrophic event that restricts City's assurance to provide water supply.

61. Water Efficient Landscapes: Permittee shall comply with Milpitas Municipal Code Title VIII, Chapter 5 (Water Efficient Landscapes) for landscape design, including but not limited to, providing separate water meters for domestic water service and irrigation service and providing applicable landscape documentation package.

62. Solid Waste and Recycling Facility Design: Permittee shall comply with all applicable City design guidelines/details associated with haul route, turning radius, vertical and horizontal clearance, trash enclosure, staging area, storage area, etc. As Milpitas residents of residential units with individual cart services can request 96-gallon carts, the staging and storage areas of all units of the common-green condominium community shall be designed to accommodate 96-gallon carts.

63. Recycling Report Prior to Demolition Permit Issuance: Permittee shall submit Part I of a Recycling Report on business letterhead to the Building Department, for forwarding to the Engineering Department for review and approval. The report shall describe the following resource recovery activities:
    a. What materials will be salvaged.
    b. How materials will be processed during demolition.
    c. Intended locations or businesses for reuse or recycling.
    d. Quantity estimates in tons (both recyclable and for landfill disposal). Estimates for recycling and disposal tonnage amounts by material type shall be included as separate items in all reports to the Building Division before demolition begins.

    Permittee shall make every effort to salvage materials for reuse and recycling, and shall comply with the City's demolition and construction debris recycling ordinance.

64. Recycling Report Prior to Building Permit Issuance: Permittee shall submit Part II of the Recycling Report to the Building Department, for forwarding to the Engineering Department. Part II of the Recycling Report shall be supported by copies of weight tags and/or receipts of "end dumps." Actual reuse, recycling and disposal tonnage amounts (and estimates for "end dumps") shall be submitted to the Building Department for approval by the Engineering Department prior to inspection by the Building Department.

65. Flood Plain Management: This project is in the Flood Zone "AH" with base flood elevation 15ft above mean sea level, therefore, Permittee shall comply with all applicable flood protection criterion required by the Federal Emergency Management Agency (FEMA) and

MMC Title XI, Chapter 15. Permittee shall obtain a CLOMR-F from FEMA for the development. Lack of documentation will not preclude occupancy release.

66. Mailboxes: The Permittee shall obtain information from the US Postal Services regarding placement of required mailboxes. Structures to protect mailboxes may require Building, Engineering and Planning Department review.

67. Development Fees: Permittee shall pay the following development fees. The information listed in items "a" through "i" are based upon current fee rates; however, those fee rates are subject to change. The exact fee amount shall be determined at the time of building permit fee payment.

    a. Parkland Impact Fee
        1. The project is required to dedicate 1.8 acres of parkland, equivalent to $5,004,981.27 fees-in-lieu.
        2. The applicant will receive credit for 0.72 acres of private recreation space on site. Upon demonstration of provision of this private recreation space to the satisfaction of the Direction of Planning or his/her designee, $3,002,988.76 in parkland fees will be due, per table below.

Pulte Townhomes and Apartments Proposed	206
Pulte Townhomes and Apartments Population Estimate (2.49 persons/unit per Census)	513 persons
Citywide Parkland Requirement	5 acres/1,000 people or equivalent fees-in-lieu
Total Parkland Acreage or In-Lieu Fee Required	2.56 acres / $5,921,071.60
Private Recreation/Open Space provided in the Project	.87 acres
Public Recreation / Public Park Land provided	0.0 acres
Balance of Parkland Acreage or In-Lieu Fee Due	**$3,912,520.00**

    b. Storm water connection fee at $16,771/acre for residential and $21,562/acre for commercial.
    c. Water connection fee at $1,164/unit for residential, residential and $5.97/gpd for commercial, based upon increased water usage.

d. Sewer connection fee at $1,406/unit for residential and $8.52/gpd for commercial, based upon increased average wastewater flow.
e. Wastewater Treatment Plant fee per MMC VIII, Chapter 2, Section 7.04.
f. Calaveras Boulevard Widening Traffic Impact fee per Resolution No. 7894.
g. 3.8% of applicable fees in accordance with City Resolution No. 8969 as Permitting Automation Fee.
h. FEMA Flood Zone Designation Letter fee in the amount of $100.00 each.
i. Public Art Fee or Public Art on site, as set forth in Milpitas Municipal Code Section XI-10-14.

68. Foundation Design: Building foundations adjacent to public utilities shall be designed to be self-supporting such that the building weight is not required to be supported during shoring and excavation of adjacent utilities. If any project building is located next to a City easement, the City is not responsible for any foundation damage that would occur due to excavating in the event of servicing or repairs in that easement.

69. Fill and Retaining Wall Design in Sanitary Sewer Easement: The existing 10ft-wide sanitary sewer easement (SSE) located along the project property's southern side property line shall be kept clear of all unauthorized structures, including any retaining walls. For the design of any fill and retaining walls in the area within and immediately adjacent to this SSE, Permittee shall select one of the following design options that are either called out on the approved civil plan sheets or discussed with City staff in a meeting that took place on September 19, 2023:
    a. Permittee is to construct a retaining wall immediately north of the SSE to structurally support fill placed in the property's southern area north of the SSE. No structural fill is to be placed within the SSE under this design option.
    b. Neighboring property to the south at 1301 California Circle (APN 022-38-002) to dedicate a slope easement along the north edge of the property line for the benefit of the project property. Permittee is to place sloped fill in said easement to structurally support fill placed in the project property's southern area, including within the SSE.
    c. Permittee is to propose a realignment of the existing SSE away from the southern side property line that would allow them to construct a retaining wall along said property line to structurally support fill placed in the project property's southern area, including within the SSE. Any proposed SSE realignment is subject to the approval of the City and must provide adequate space for the City to properly access, maintain, repair, and replace the existing 18" City sanitary sewer main located within the SSE.

DURING CONSTRUCTION

The following conditions shall be complied with at all times ***during*** *the construction phase of the project, unless otherwise approved by the Director of Engineering/City Engineer.* ***(E)***

70. Dewatering: If dewatering is needed during construction, Permittee shall obtain a Short-Term Industrial Wastewater Permit from the San Jose/Santa Clara Water Pollution Control Plant for discharging the groundwater to a sanitary sewer system.

71. Prohibition of Potable Water Usage: Permittee shall use recycled water for construction purposes, including dust control and compaction. Permittee shall comply with MMC VIII-6-5.00 and 6-6.00 where potable water usage is prohibited, unless otherwise approved by the City Council.

72. Construction Staging and Employee Parking: Permittee shall place all construction related materials, equipment, and arrange construction workers parking on-site and not located in the public right-of-ways or public easements.

73. Water Shut-down Plan: Permittee shall provide a water shut-down plan at least seven days in advance of the shut-down in coordination with the Engineering Inspector, and notify affected property owners/tenants when cut-in tee(s) is/are required.

PRIOR TO FIRST OCCUPANCY

*The following conditions shall be met **prior to** first building occupancy on either lot, unless otherwise approved the Director of Engineering/City Engineer.*

74. Completion of Public Improvements: Permittee shall complete all public improvements, including but not limited to frontage improvements along California Circle, onsite City water and sewer mains and their appurtenances, and sectional liners for the sanitary sewer mains along the project frontage, as shown on City approved plans.

75. LOMR-F: Permittee shall submit the FEMA approved LOMR-F for each unit/building associated with the requested occupancy, if project is located in the SFHA. Lack of documentation will not preclude occupancy release.

76. Elevation and/or Flood Proofing Certificate: Permittee's civil engineer shall submit Elevation and/or Flood Proofing Certificate for the lowest finished floor elevation of each building for City record.

77. Landscape Certificate of Completion: Permittee shall submit a Certificate of Substantial Completion that complies with the Milpitas Municipal Code Water Efficient Landscapes ordinance.

78. Record Drawings: Permittee shall submit record drawings in AutoCAD, Tiff, and PDF formats for City records. Record drawings shall include all public improvements. Additionally, if the project uses recycled water, the permittee shall also submit record drawings of on-site irrigation facilities.

79. Private Job (PJ) Balance: Permittee shall pay for any remaining balance from the Private Job deposit.

LEGEND
P = Planning Department
B = Building Department

E = Engineering Department
F = Fire Department
H = Housing Division
CAO = City Attorney's Office
ALL = All Reviewing Departments

NOTICE OF RIGHT TO PROTEST

The Conditions of Project Approval set forth herein include certain fees, dedication requirements, reservation requirements, and other exactions. Pursuant to Government Code Section 66020(d)(1), these Conditions constitute written notice of a statement of the amount of such fees, and a description of the dedications, reservations, and other exactions. You are hereby further notified that the 90-day approval period in which you may protest these fees, dedications, reservations, and other exactions, pursuant to Government Code Section 66020(a), began on date of adoption of this resolution. If you fail to file a protest within this 90-day period complying with all of the requirements of Section 66020, you will be legally barred from later challenging such exactions.

AGREEMENT

Permittee/Property Owner

The undersigned agrees to each and every condition of approval and acknowledges the NOTICE OF RIGHT TO PROTEST and hereby agrees to use the Project property on the terms and conditions set forth in this resolution.

Dated: _____ _____

Signature of Permittee

Project Narrative

Pulte Group has moved forward toward the implementation of its previous approvals at 1355 California Circle. The site has been demolished, grading work and utility placement has begun. The site was approved for 131 “for sale” townhomes and stacked condo units, as well as 75 “rental” apartment units.

The minor amendment that is being sought contemplates changing the design of the 75 unit apartment complex. The apartment site itself will not change (it is slightly under 1 acre in size). The number of units and breakdown of affordability remains the same as well. There will still be 75 units and a minimum of 31 units would be low income, the rest would be moderate. We are still providing a 36.4% “BMR” contribution for this site.

The essential changes that are being sought are changing the configuration from studios/1 bdrm and 2 bdrm layout to 1/bdrm/2 bdrm and 3 bdrm layout. We feel that this will appeal to a greater number of families and obviously provide more affordability to a greater number of people. Additionally we are wanting to lower the overall height of the structure by approximately eighteen (18) feet. This provides a cost savings and adds to the overall aesthetic beauty of California Circle.

We are requesting some reduced setbacks along our frontage and side yard, however we are also increasing the open space from the previously approved 11.7% up to 25%.

This is a project that we feel will be a major support structure towards the City’s RHNA obligation, as well as a ideal place for affordable living.

Previously approved:

16 Studios/40 1 bdrm/19 2 bdrm

Amended Request:

30 1 bdrm

21 2 bdrm

24 3 bdrm

Building Height drops from 74’ 4" to 64’11”

Front setback is reduced from just over 18’ to 4’9” (to the one story element)

Parking spaces stay the same

Side setback is increased from 2'5" to 4' 5"

Pulte Group - 1355 California Circle

Density Bonus Waivers and Concession
(Narrative and Justification)

The previously approved project was granted 5 waivers under Density Bonus Law. The following represents the status and/or modification of those waivers:

Density - This project received a waiver by being allowed to develop at 30.7 DU's per acre when the NCMU density was established at 21-30 DU's per acre. Our minor adjustment does not change the previously approved density.

Parking - We are not seeking any change in the number of parking spaces that were previously approved on the earlier plan. We have the same number of parking spaces in the revised apartment complex and are within the State Density Bonus Guidelines.

Building Height - We sought and received a concession with regard to height for the entirety of the site. The General Plan and Zoning allowed for 3 stories and 45' of total height. The products that were approved were 51', 60' and 83' (and 3,4 and 6 stories) being approved. Additionally, the 6 story 83' apartment building was considered a Significant Impact, that could not be mitigated under our EIR (City Council delivered a unanimous vote of overriding consideration) approving that particular element. Our Minor Adjustment lowers the apartment building height to 5 stories and just under 65'. Although this still is over the 45' requirement, it lowers the overall height by just over 20%

Front Setback - We had received a waiver which required the front setback to be between 8' at a minimum and 15' at a maximum. Our approval actually allowed an 18'8" setback from our ROW (so we were greater than the maximum allowed). In this case, we are seeking a 4'9" front setback (to a one story element). We feel that this is justified by the significant lowering of the building height for the entire complex.

SHEET INDEX

ARCHITECTURE

A0.0	COVER SHEET
A0.1	FIRE ACCESS PLAN
A0.2	SOLID WASTE HANDLING PLAN
A2.0	BUILDING ELEVATIONS
A2.1	BUILDING ELEVATIONS
A2.2	PERSPECTIVE VIEW 1
A2.3	PERSPECTIVE VIEW 2
A3.1	BUILDING PLANS - LEVEL 1
A3.2	BUILDING PLANS - LEVEL 2
A3.3	BUILDING PLANS - LEVEL 3 (4 SIM.)
A4.0	SITE / BUILDING SECTIONS

CIVIL

C1	PRELIMINARY GRADING & DRAINAGE PLAN
C2	PRELIMINARY UTILITY PLAN
C3	STORMWATER MANAGEMENT PLAN
C4	STORMWATER MANAGEMENT DETAILS
C5	SECTIONS & DETAILS
C6	SOLID WASTE HANDLING PLAN
C7	FIRE TRUCK ACCESS PLAN

LANDSCAPE

L.1	COMPOSITE LANDSCAPE PLAN
L.2	GROUND LEVEL LANDSCAPE PLAN
L.3	PODIUM LEVEL LANDSCAPE PLAN

GROSS BUILDING AREA

AMENITY	3,474 SF
BIKE STORAGE	272 SF
CORRIDOR	9,621 SF
LAUNDRY	474 SF
LEASING	430 SF
LOBBY	2,850 SF
MAIL	391 SF
SUPPORT	4,173 SF
UNITS	63,221 SF
GROSS BUILDING AREA	84,907 SF

EXCLUDES PARKING GARAGE AND SUPPORT SPACES WITHIN THE GARAGE

CITY OF MILPITAS' AFFORDABLE HOUSING INFORMATION

NUMBER OF BELOW MARKET RATE UNITS	75 UNITS (100%)
INCOME LEVEL	ALL UNITS RESTRICTED TO AT OR BELOW A LOW INCOME LEVEL
RENTAL OR OWNERSHIP	RENTAL
GROSS SQUARE FOOTAGE OF BUILDING BY EACH USE INCLUDING PARKING USES	SEE "GROSS BUILDING AREA" ON SHEET A0.0
GROSS SQUARE FOOTAGE OF PROJECT'S PROPOSED TOTAL RESIDENTIAL AREA AND GROSS SQUARE FOOTAGE OF EXISITING RESIDENTIAL AREA	0 SF EXISTING RESIDENTIAL. FOR PROPOSED, SEE TABLE "GROSS BUILDING AREA" ON SHEET A0.0
GROSS SQUARE FOOTAGE OF PROJECTS PROPOSED NON-RESIDENTIAL FLOOR AREA THAT WILL REMAIN AS IS, AND ANY SQUARE FOOTAGE OF NEW OR PROPOSED TO BE CONVERTED NON-RESIDENTIAL FLOOR AREA THAT IS EXEMPT FROM PAYING AFFORDABLE HOUSING IMPACT FEES PURSUANT TO SECTION 5 OF THIS CHAPTER	ALL NEW CONSTRUCTION. SEE "GROSS BUILDING AREA" ON SHEET A0.0.
HABITABLE SQUARE FEET FOR RESIDENTIAL UNITS AND NET RESIDENTIAL SQUARE FEET OF TOTAL PROJECT, AFFORDABLE UNITS, AND MARKET RATE UNITS	SEE "RESIDENTIAL UNIT SUMMARY" ON SHEET A0.0 FOR NET RENTABLE SF (NRSF). ALL UNITS AFFORDABLE.
THE UNIT SIZES (NET RESIDENTIAL SQUARE FEET PER UNIT) FOR THE TOTAL PROJECT, MARKET RATE UNITS, AND AFFORDABLE UNITS	SEE "RESIDENTIAL UNIT SUMMARY" ON SHEET A0.0 FOR NET RENTABLE SF (NRSF). ALL UNITS AFFORDABLE.
THE PROPOSED LOCATION OF THE AFFORDABLE UNITS BY INCOME LEVEL AND BY BUILDING AND LOCATION ON EACH FLOOR OF A BUILDING	100% AFFORDABLE

NOTES
1. ALL AFFORDABLE UNITS IN A PROJECT OR PHASE OF A PROJECT SHALL BE CONSTRUCTED PRIOR OR CONCURRENTLY WITH MARKET-RATE UNITS.
2. ALL AFFORDABLE UNITS SHALL BE REASONABLY COMPARABLE IN TERMS OF FLOOR PLAN AND BASE FINISH AMENITIES TO MARKET RATE UNITS IN THE PROPOSED DEVELOPMENT.
3. THE QUALITY OF THE EXTERIOR DESIGN, LANDSCAPING, AND CONSTRUCTION OF THE AFFORDABLE UNITS SHALL BE CONSISTENT WITH THE OTHER UNITS IN THE PROPOSED DEVELOPMENT.
4. AN EXECUTED AGREEMENT IMPOSING APPROPRIATE OWNERSHIP CONTROLS ON THE AFFORDABLE UNITS IS REQUIRED PRIOR TO CERTIFICATE OF OCCUPANCY.

BUILDING CODE ANALYSIS

USE	MULTI-FAMILY
OCCUPANCY CLASSIFICATION	R-2, S-2, A-3, B, U
TYPE OF CONSTRUCTION	TYPE V-A WOOD FRAME, TYPE I-A (GARAGE)
SPRINKLER SYSTEM	NFPA 13 PER SECTION 903.3.1.1
ALLOWABLE STORIES	4 STORIES (TYPE V-A)

GENERAL NOTES

1. ACCESS TO ALL PUBLIC AREAS IN AND AROUND THE BUILDING WILL BE DESIGNED TO BE ACCESSIBLE IN ACCORDANCE WITH THE AMERICANS WITH DISABILITIES ACT.

2. THE RESIDENTIAL UNITS WILL BE DESIGNED TO BE ACCESSIBLE IN ACCORDANCE WITH THE CALIFORNIA BUILDING CODE.

ZONING ANALYSIS

PROJECT NAME	CA CIRCLE - AFFORDABLE
PROJECT LOCATION	1355 CALIFORNIA CIRCLE, MILPITAS, CA
APN	022-38-007
SITE AREA	0.94 ACRES (41,108 SF)
GENERAL PLAN	NCMU (NEIGHTBORHOOD COMMERCIAL MIXED USE)
ZONING	MXD (MIXED USE DISTRICT)
LAND USE	RESIDENTIAL

	PROPOSED
RESIDENTIAL UNITS	
DENSITY	80 DU/AC
TOTAL UNITS	75 DU
HEIGHT LIMIT	64'-11"
SETBACKS	
FRONT (CA CIRCLE)	4'-9" TO 13'-7" (FROM BACK OF WALK)
SIDE (EAST - EXTERNAL PL)	14'-6"
SIDE (PRIVATE ST FRONTAGE)	4'-5" AT GROUND FLOOR**
SIDE (TOWNHOME)	11'-0"
OPEN SPACE	25% (10,350 SF) ON PODIUM DECK
LOT COVERAGE (MAX)	75.8% (31,3165 SF BLDG FOOTPRINT)
FAR*	1.97 (81,057 SF TOTAL FLOOR AREA)
BICYCLE PARKING (MIN)	8 LONG TERM STALLS

NOTES:

*EXCLUDES GARAGE

**REDUCED SETBACK NECESSITATED BY FIRE REQUIREMENTS. FOR AERIAL APPARATUS ACCESS, FURTHEST POINT OF BUILDING FAÇADE REQ'D TO BE WITHIN 30' OF DRIVE AISLE. MEETINGS WITH FIRE DEPARTMENT HELD REGARDING PROPOSED SITE PLAN AND THIS DESIGN HAS BEEN INITIALLY SIGNED OFF ON.

RESIDENTIAL UNIT SUMMARY

UNIT TYPE	UNIT NRSF	COUNT	TOTAL NRSF	%
1 BEDROOM				
1-01 MOBILITY	600 SF	22	13,200 SF	29%
1-02 INSIDE CORNER	602 SF	8	4,816 SF	11%
		30	18,016 SF	40%
2 BEDROOM				
2-01 MOBILITY	871 SF	18	15,678 SF	24%
2-02 ADAPTABLE	860 SF	3	2,580 SF	4%
		21	18,258 SF	28%
3 BEDROOM				
3-01	1,083 SF	4	4,332 SF	5%
3-02 MOBILITY	1,043 SF	8	8,344 SF	11%
3-02.1 MOBILITY	1,016 SF	8	8,128 SF	11%
3-03 MOBILITY	1,043 SF	4	4,172 SF	5%
		24	24,976 SF	32%
TOTAL COUNT		75	61,250 SF	100%

PARKING PROVIDED

7'-6"W x 15'-0"D_COMPACT	35
9'-0"W x 18'-0"D_ADA	7
9'-0"W x 18'-0"D_STANDARD	35
9'-0"W x 18'-0"D_TANDEM	8
9'-0"W x 18'-0"D_USPS	1
SITE TOTAL	86

PROJECT TEAM DIRECTORY

OWNER

AG EHC II (PHM) CA 2, L.P.
8585 East Hardford Drive
#118
Scottsdale, AZ 85255

APPLICANT

PULTE HOME COMPANY, LLC
4511 Willow Road
Suite 8
Pleasanton, California 94588

ARCHITECT

KTGY
17911 Von Karman Avenue
Suite 200
Irvine, CA 92614

CIVIL

CIVIL ENGINEERING ASSOC., INC
28 Railway Ave
Campbell, CA 95008

LANDSCAPE

CANYON PARK STUDIO
910 Dogwood Street
Costa Mesa, CA 92627

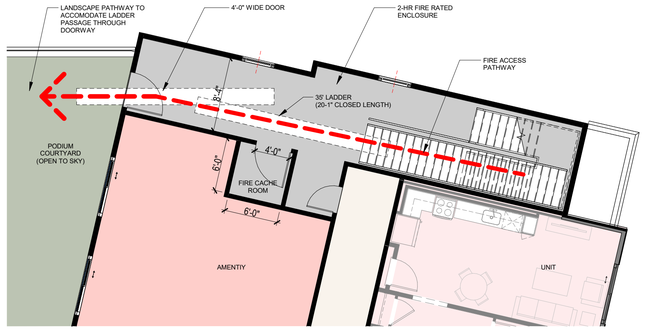

LEVEL 2 FIRE ACCESS 1/8" = 1'-0" 5

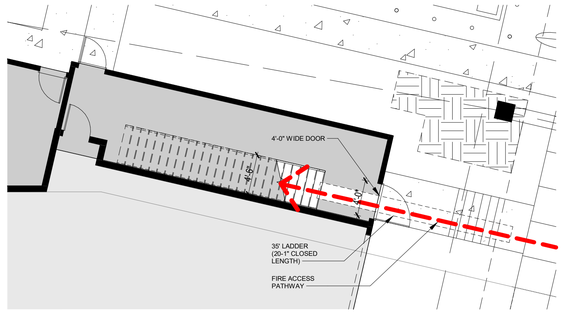

LEVEL 1 FIRE ACCESS 1/8" = 1'-0" 4

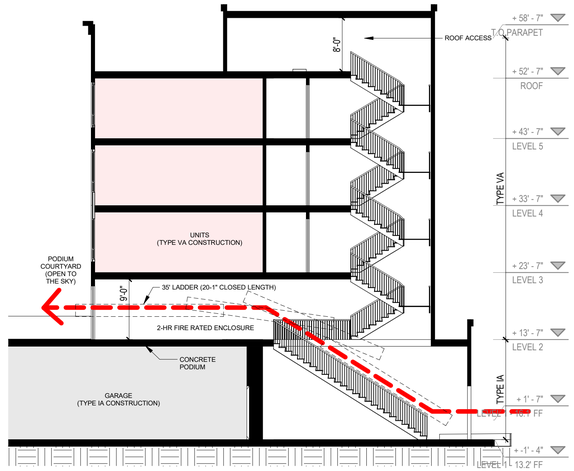

STAIR 1 (FIRE PODIUM ACCESS) 3/32" = 1'-0" 3

FIRE FLOW CALCULATION

TOTAL BUILDING AREA

		BUILDING AREA
PARKING PODIUM	TYPE IA	31,735 SF
RESIDENTIAL	TYPE VA	83,480 SF
	TOTAL AREA	115,215 SF

FIRE FLOW BASED ON CONSTRUCTION TYPE

	Base Fire Flow (CFC Table B105.1(2)	Max. Fire Flow Reduction(a)	Req'd Fire Flow (GPM)
Type 1A at 115,215 sf =	3,750	- (3,750 x 0.25) =	2,812
Type VA at 115,215 sf =	6,250	- (6,250 x 0.25) =	4,688

(a) The maximum fire flow reduction for all commercial buildings greater than 30,000 square feet and residential podium buildings shall not exceed 25 percent of the fire flow specified in Table B105.1(2).

PERCENTAGE OF BUILDING
IA = 31,735/115,215 x 100 = 28%
VA = 83,480/115,215 x 100 = 72%

THEREFORE
0.28 (2,812) + 0.72 (4,688) = **4,163 GPM MIN. FIRE FLOW REQUIRED**

TABLE C102.1 REQUIRED NUMBER AND SPACING OF FIRE HYDRANTS

FIRE FLOW REQUIREMENT (GPM)	MIN # OF HYDRANTS	AVG SPACING BETWEEN HYDRANTS (FT)	MAXIMUM DISTANCE FROM ANYPOINT ON STREET OR ROAD FRONTAGE TO A HYDRANT
4,001–5,000	5	300	180

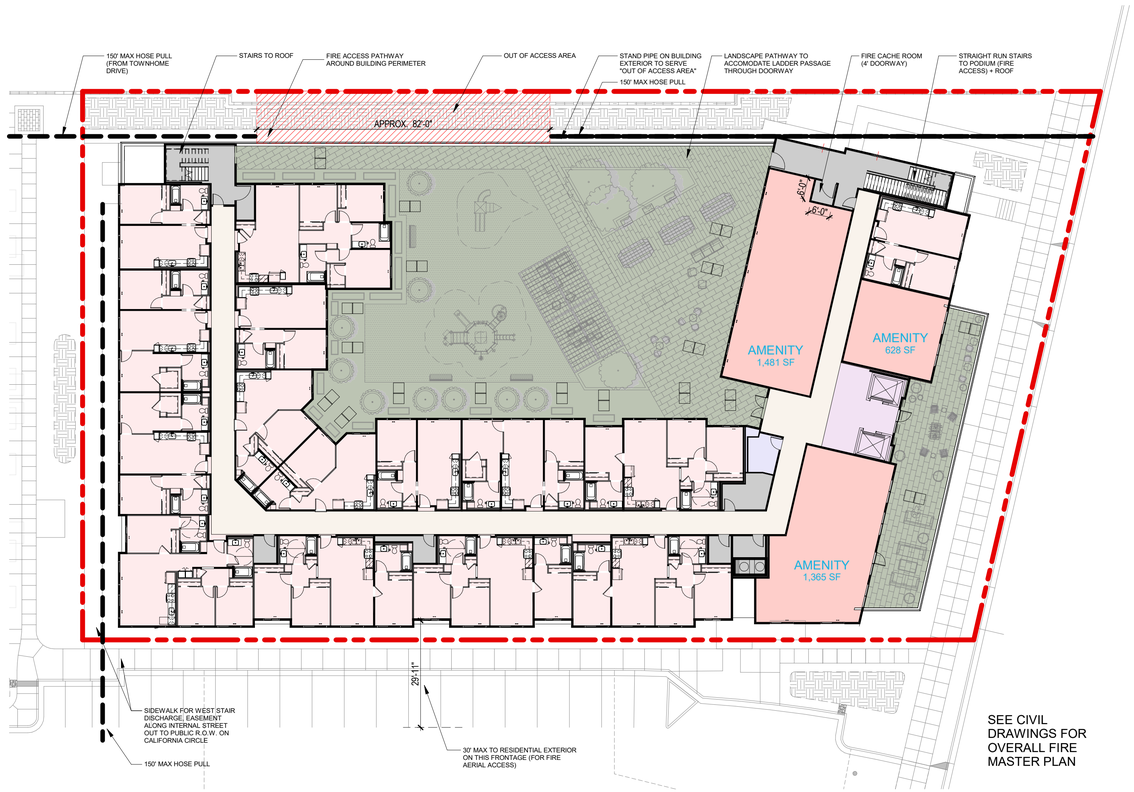

LVL 2 - FIRE 1" = 20'-0" 2

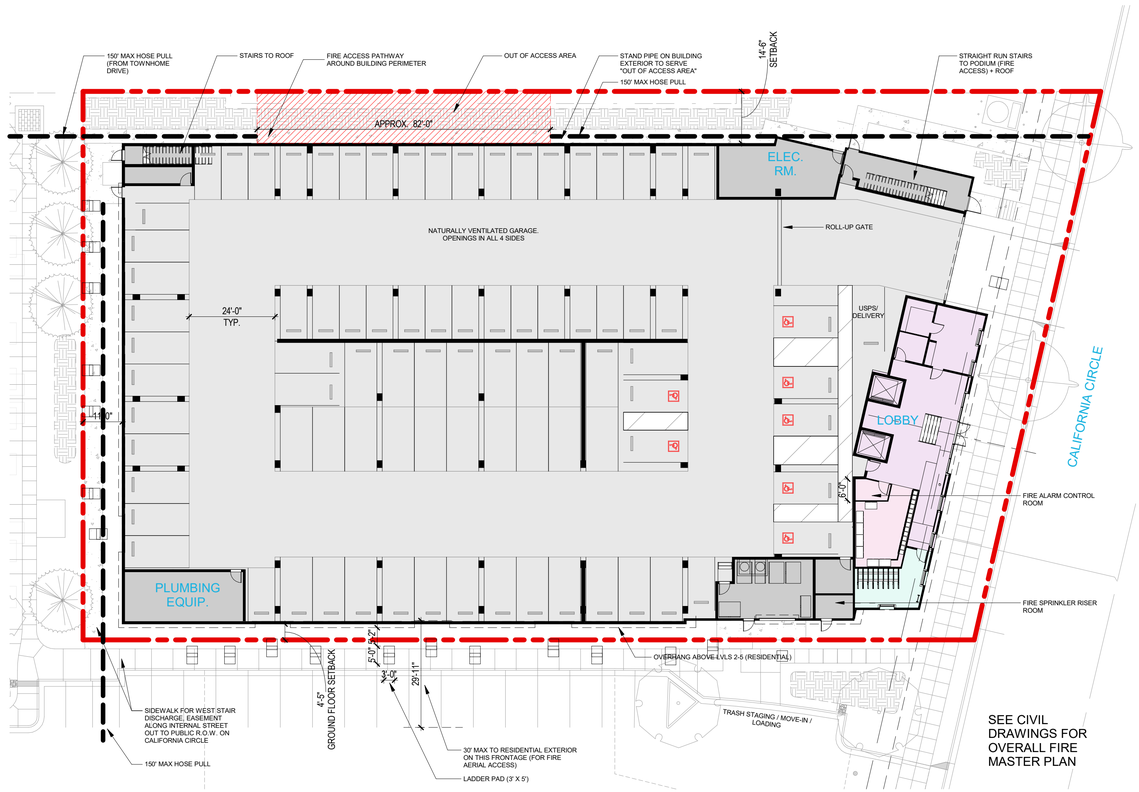

LVL 1 - FIRE 1" = 20'-0" 1

ktgy
Architecture + Planning
888.456.5849
ktgy.com

Pulte HOMES

CA CIRCLE - AFFORDABLE
1355 California Circle,
Milpitas, CA 95035 # 240196

SITE DEVELOPMENT PERMIT
ADJUSTMENT
11/18/2024

0' 10' 20' 40'

FIRE ACCESS PLAN

A0.1

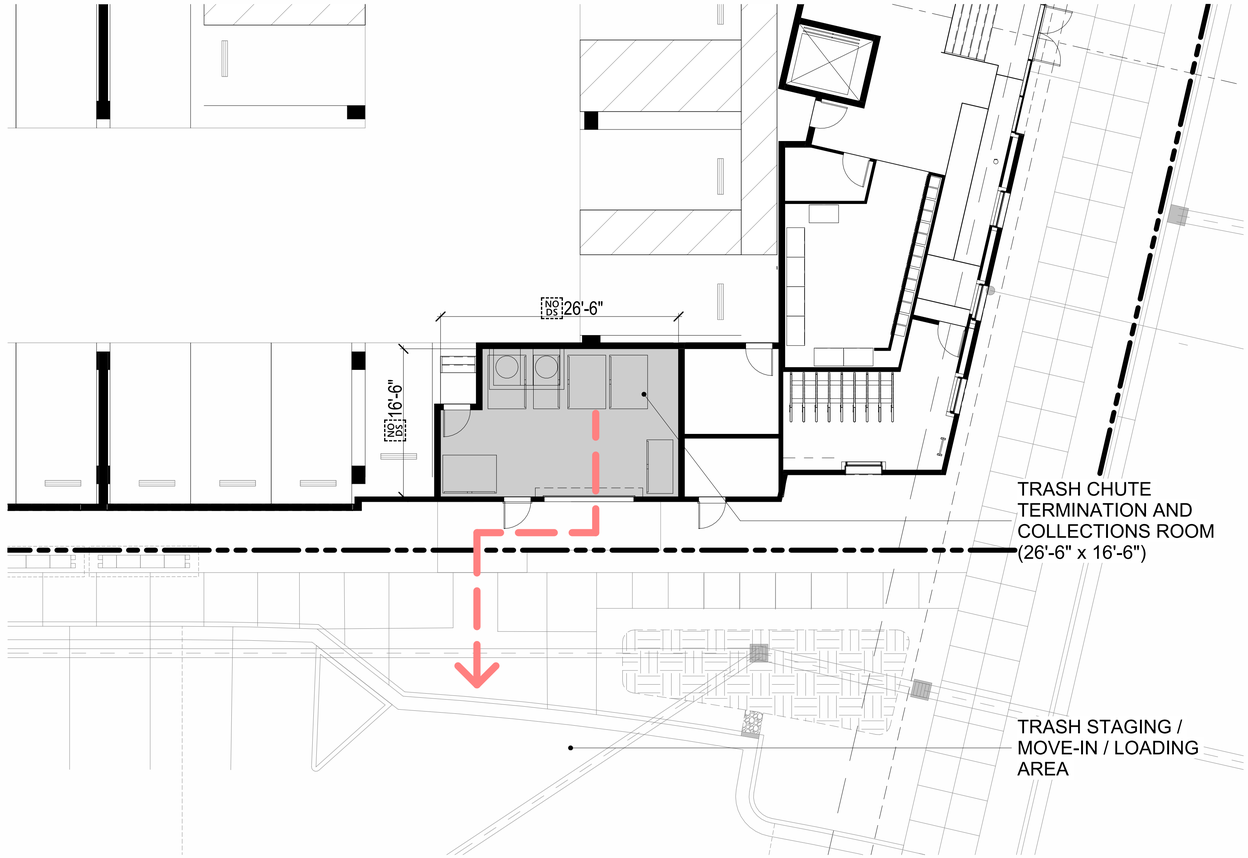

LEGEND

TRASH TERMINATION ROOM

ROLL OUT ACCESS PATH TO TRASH STAGING AREA. OPERATED BY BUILDING MANAGEMENT

BIN SIZING

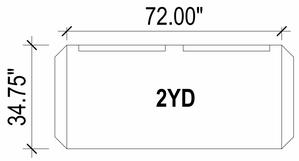

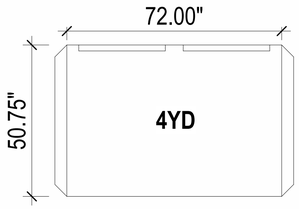

Milpitas Sanitation

FEL SIZE	FRONT HEIGHT	BACK HEIGHT	DEPTH	WIDTH
	A	B	C	D
1YD	28"	28"	24"	72"
2YD	34.5"	41.5"	34.75"	72"
3YD	42"	51"	41.75"	72"
4YD	46.5"	57.5"	50.75"	72"
6YD	50"	69"	66"	72"
8YD	57"	90"	72.5"	72"

*Casters add 8" to height

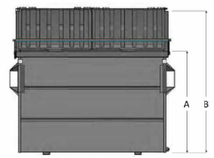

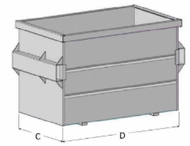

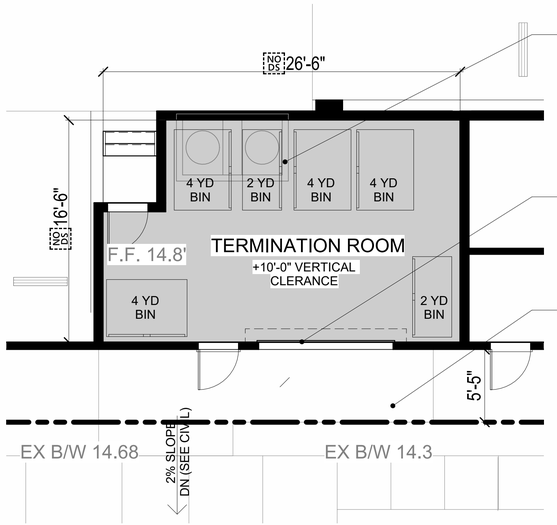

Trash Truck Routing
Trash staging and truck loading area will be provided within the property. The Waste company will pull out the bins from the termination room and move them to the trash loading area to commence operations. No ramp between termination room and loading area (except 2% slope for positive water drainage)

Trash Pickup Schedule
Trash Bins are anticipated to be on site at all times for once a week pick-up schedule.

Tenants will not access the ground floor trash termination room directly. Man-door for maintenance staff only. Individual tenants will deposit trash and recyclable materials into two separate chutes located in a trash room at each upper floor level. The non-compacted trash and recyclable materials will collect in 3 CY Bins in the trash termination room located on the ground floor. Organic trash (recyclable food scraps and food soiled paper waste) will be collected in a receptacle located in the trash room on each upper-level floor. The building porter will collect these receptacles and transport them in the trash termination room located on the ground floor. 2 CY trash bin is provided at the ground floor trash collection room to collect organic trash. Organic trash will not include yard trimming.

The trash chutes will contain a mechanism that will allow complete shut-off in order to remove/replace the bins as they require emptying and limit access to all other floors when any one chute door is opened.

A porter will be required to monitor the trash levels throughout the day as a part of daily duties.

Maintenance of Trash Rooms
The maintenance of the trash rooms will be monitored and managed by Property Management.

Roll Out Service and Pick-up
Trash collection bins will be moved from the termination room at Level 1 (parking structure) to the provided trash staging area along the path shown in the diagram. The property owner will contract for the property management company to provide on-site trash management to ensure that full bins are replaced with empty ones. A Service Provider will be contracted by the property owner to empty the bins as necessary per schedule.

The rental/ownership of the bins and the trash service for the tenants will be paid for by the building owner.

The Service Provider will be contracted to provide stinger-truck service for conveyance of bins to the curbside and collection of bins from the staging area.

FAMILY METRIC	UNIT	CAL. FACTOR	ESTIMATED WASTE (LBS/DAY)	ESTIMTED TOTAL WASTE LBS/WEEK/UNIT
75	LBS/WEEK/UNIT	8.6	645	60.2
WASTE GENERATED WEEKLY		4,515	LBS/WEEK	

SOLID WASTE CALCULATIONS					
UNITS	LBS/WEEK/UNIT	C.Y./WK/UNIT	TOTAL C.Y.	4 C.Y. (NON COMPACT) BINS REQUIRED	# OF PICK UPS PER WEEK
75	16.4	0.12	9.0	2	1
RECYCLING CALCULATIONS					
UNITS	LBS/WEEK/UNIT	C.Y./WK/UNIT	TOTAL C.Y.	4 C.Y. BINS REQUIRED	# OF PICK UPS PER WEEK
75	19.3	0.07	4.15	1	1
ORGANIC WASTE - FOOD SCRAPS / FOOD SOILED PAPER (YARD TRIMMINGS EXCLUDED)					
UNITS	LBS/WEEK/UNIT	C.Y./WK/UNIT	TOTAL C.Y.	2 C.Y. BINS REQUIRED	# OF PICK UPS PER WEEK
75	14.9	0.04	2.0	1	1

ktgy
Architecture + Planning
888.456.5849
ktgy.com

Pulte HOMES

CA CIRCLE - AFFORDABLE
1355 California Circle,
Milpitas, CA 95035
240196

SITE DEVELOPMENT PERMIT ADJUSTMENT
11/18/2024

0' 4' 8' 16'

SOLID WASTE HANDLING PLAN

A0.2

BLDG ELEVATION - SOUTH 3/32" = 1'-0" 2

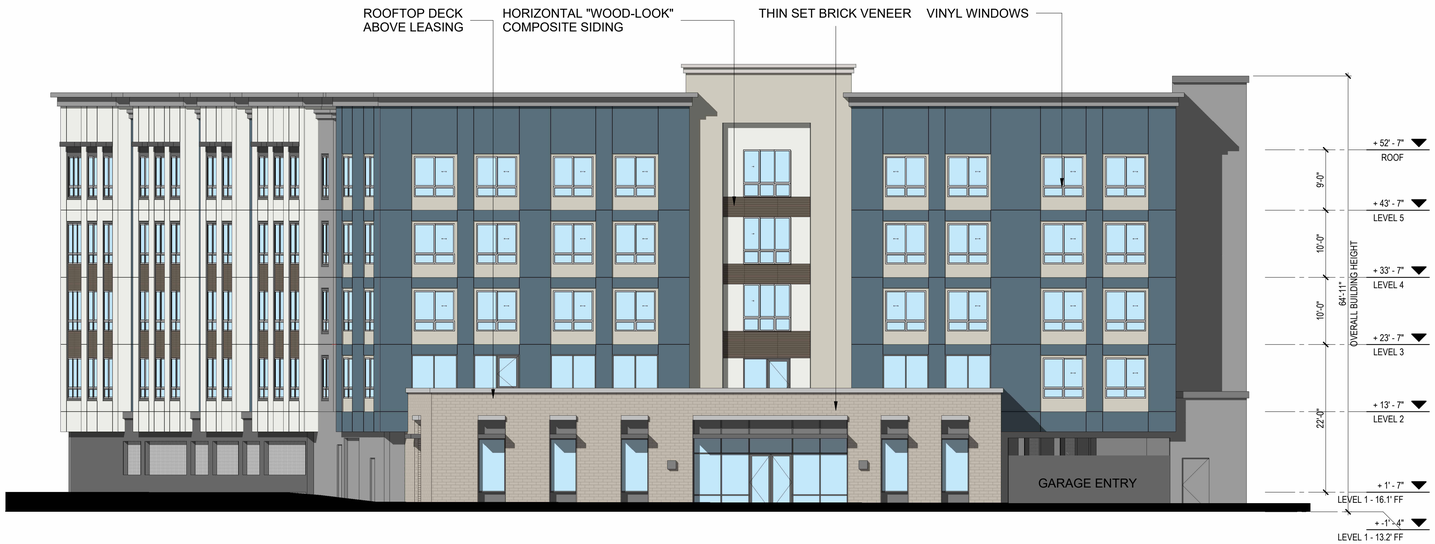

BLDG ELEVATION - EAST 3/32" = 1'-0" 1

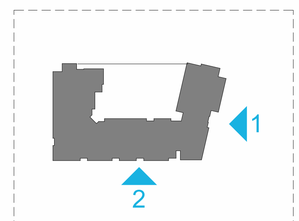

ktgy
Architecture + Planning
888.456.5849
ktgy.com

Pulte HOMES

CA CIRCLE - AFFORDABLE
1355 California Circle,
Milpitas, CA 95035
240196

SITE DEVELOPMENT PERMIT
ADJUSTMENT
11/18/2024

BUILDING ELEVATIONS

A2.0

BLDG ELEVATION - NORTH 3/32" = 1'-0" **1**

BLDG ELEVATION - WEST 3/32" = 1'-0" **2**

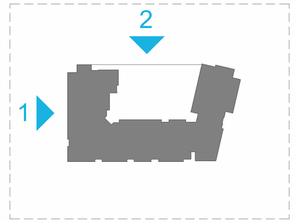

ktgy
Architecture + Planning
888.456.5849
ktgy.com

Pulte HOMES

CA CIRCLE - AFFORDABLE
1355 California Circle,
Milpitas, CA 95035
240196

SITE DEVELOPMENT PERMIT
ADJUSTMENT
11/18/2024

0' 16' 32' 64'

BUILDING ELEVATIONS

A2.1

Architecture + Planning
888.456.5849
ktgy.com

CA CIRCLE - AFFORDABLE
1355 California Circle,
Milpitas, CA 95035
240196

SITE DEVELOPMENT PERMIT
ADJUSTMENT
11/18/2024

PERSPECTIVE VIEW 1

A2.2

Architecture + Planning
888.456.5849
ktgy.com

CA CIRCLE - AFFORDABLE
1355 California Circle, Milpitas, CA 95035
240196

SITE DEVELOPMENT PERMIT
ADJUSTMENT
11/18/2024

PERSPECTIVE VIEW 2

A2.3

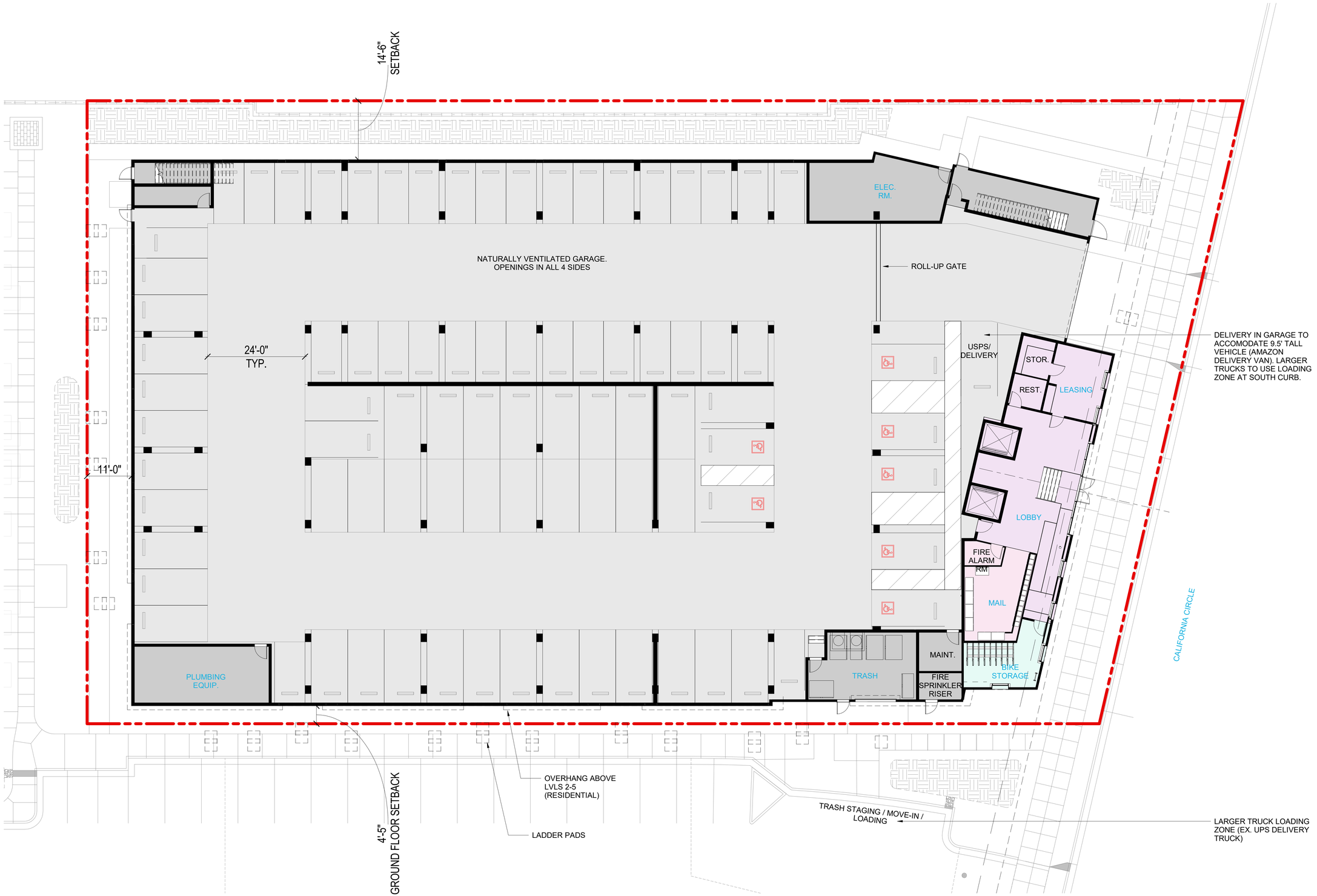

ktgy
Architecture + Planning
888.456.5849
ktgy.com

Pulte HOMES

CA CIRCLE - AFFORDABLE
1355 California Circle, Milpitas, CA 95035 # 240196

SITE DEVELOPMENT PERMIT ADJUSTMENT
11/18/2024

0' 16' 32' 64'

BUILDING PLANS - LEVEL 1

A3.1

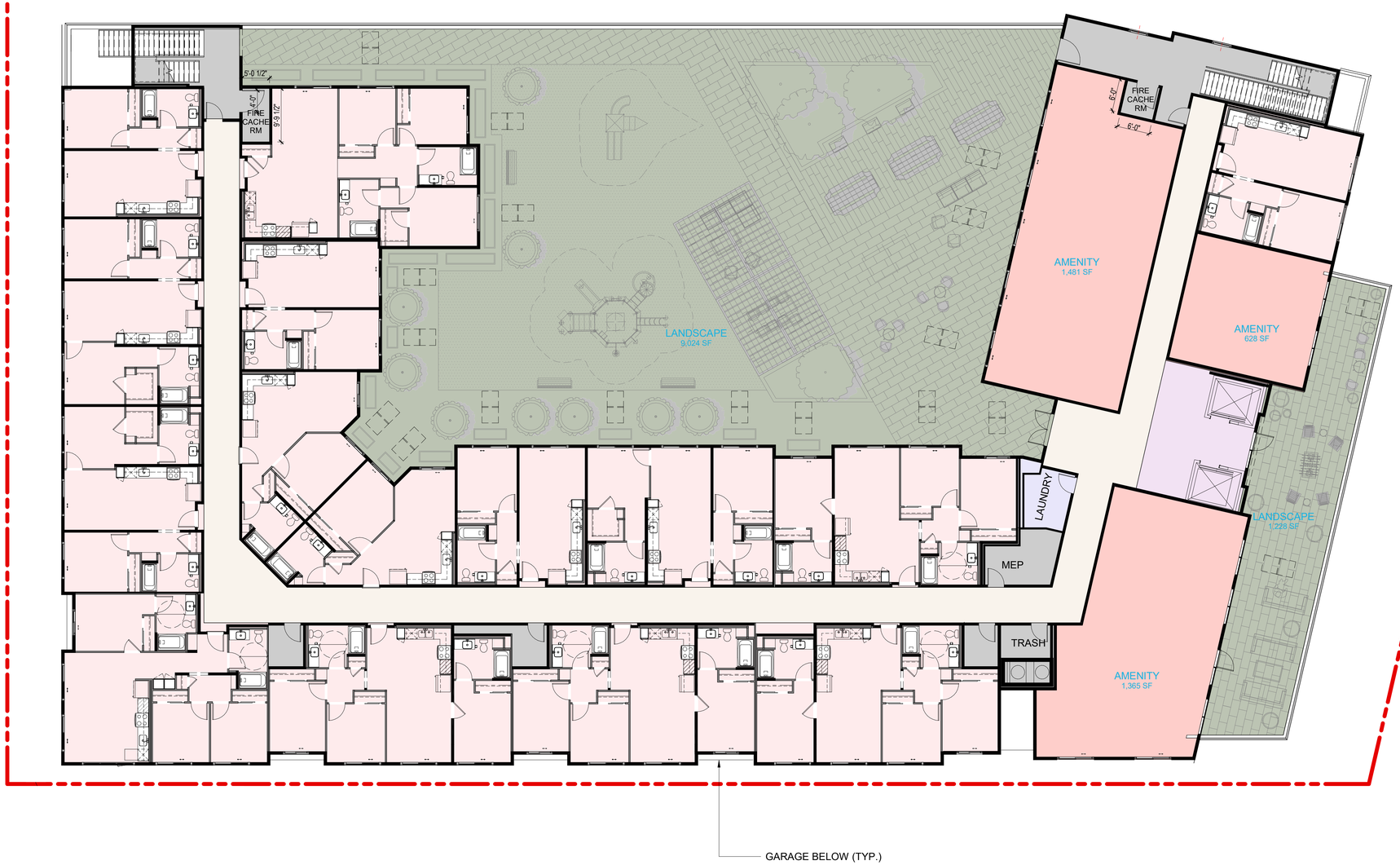

ktgy
Architecture + Planning
888.456.5849
ktgy.com

Pulte HOMES

CA CIRCLE - AFFORDABLE
1355 California Circle,
Milpitas, CA 95035
240196

SITE DEVELOPMENT PERMIT
ADJUSTMENT
11/18/2024

0' 16' 32' 64'

BUILDING PLANS - LEVEL 2

A3.2

ktgy

Architecture + Planning
888.456.5849
ktgy.com

Pulte HOMES

CA CIRCLE - AFFORDABLE
1355 California Circle,
Milpitas, CA 95035
240196

SITE DEVELOPMENT PERMIT
ADJUSTMENT
11/18/2024

0' 16' 32' 64'

BUILDING PLANS - LEVEL 3 (4 SIM.)

A3.3

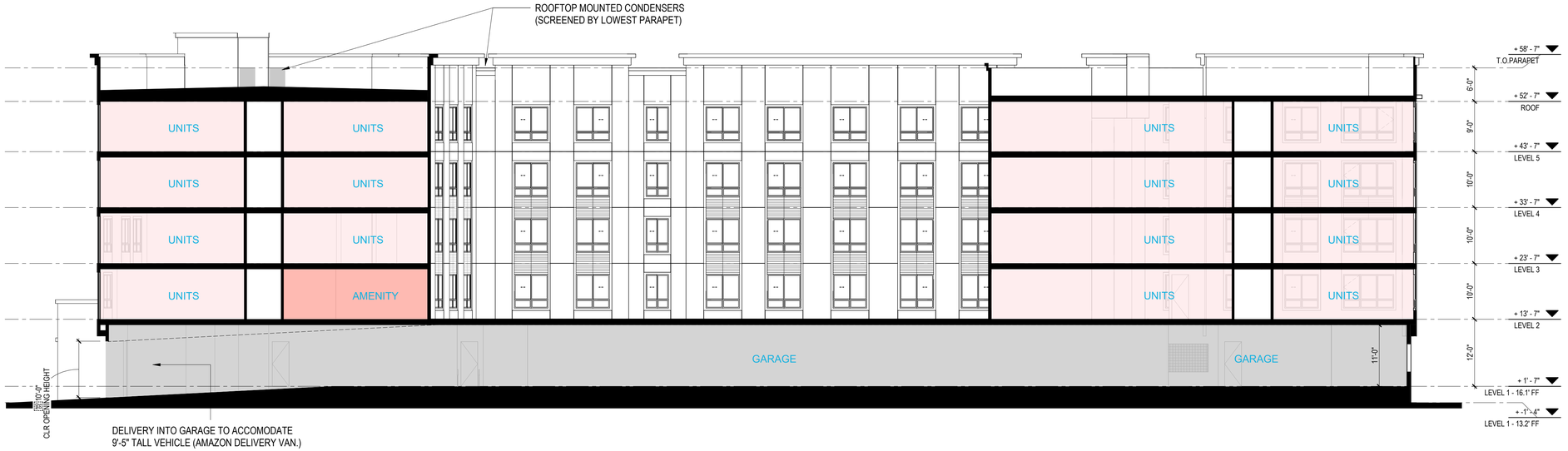

BLDG SECTION E/W 3/32" = 1'-0" **1**

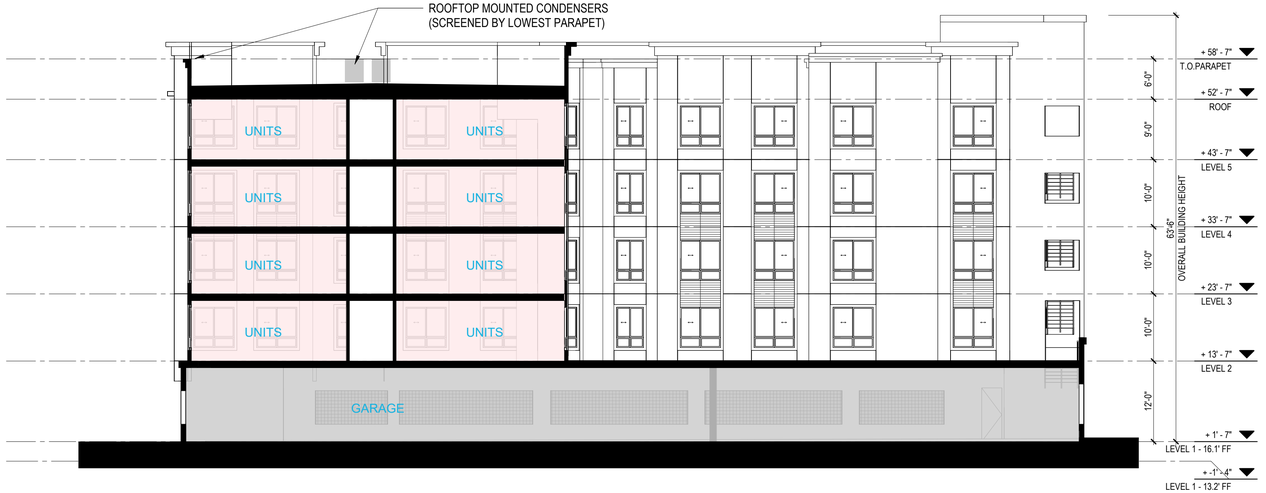

BLDG SECTION N/S 3/32" = 1'-0" **2**

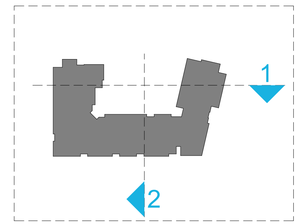

ktgy
Architecture + Planning
888.456.5849
ktgy.com

Pulte HOMES

CA CIRCLE - AFFORDABLE
1355 California Circle,
Milpitas, CA 95035
240196

SITE DEVELOPMENT PERMIT
ADJUSTMENT
11/18/2024

0' 16' 32' 64'

SITE / BUILDING SECTIONS

A4.0

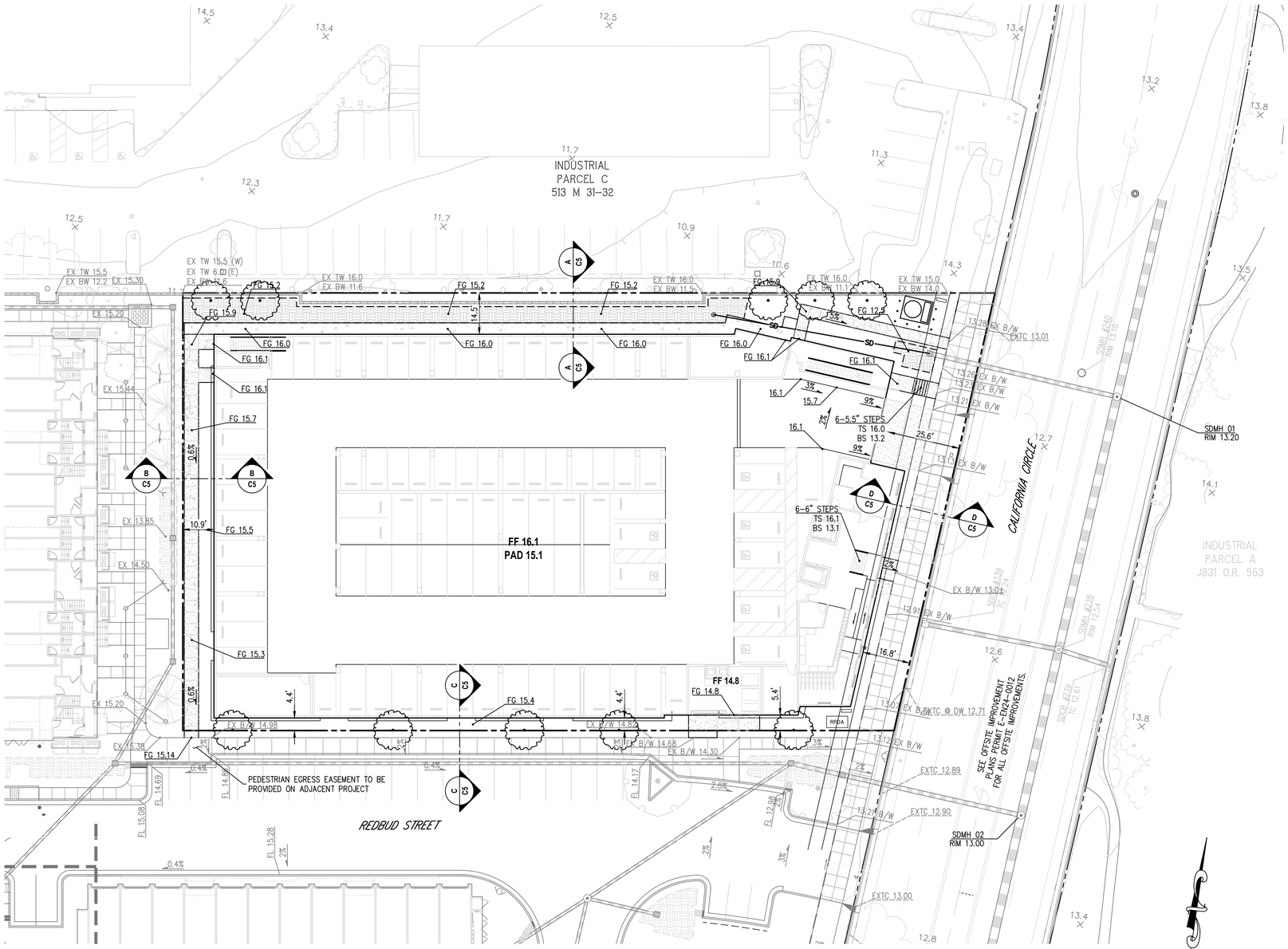

LEGEND

TO BE CONSTRUCTED	EXISTING	DESCRIPTION
		BOUNDARY
		PROPERTY LINE
		RIGHT OF WAY
		CENTER LINE
		EASEMENT LINE
		CURB, GUTTER, SIDEWALK & DRIVEWAY
		EDGE OF PAVEMENT
SS	EXSS	SANITARY SEWER PIPE & MANHOLE (SDR26 PVC)
SD	EXSD	STORM DRAIN PIPE & MANHOLE (CORRUGATED HDPE)
WT / W	EXWT / W	WATER MAIN & VALVE (C900 DR14 PVC)
RW	EXRW	RECYCLED WATER MAIN & VALVE
OH	OH	OVERHEAD LINE
	G	GAS LINE
	PTRO	PETROLEUM PIPE
		CURB INLET
		FIELD INLET
SD SD	SD SD	AREA DRAIN PIPE & AREA DRAIN
		FIRE HYDRANT
W ARV	W ARV	WATER METER & AIR RELEASE VALVE
		POWER POLE
		ELECTROLIER
		SURVEY MONUMENT
		SIGN
0.5%	0.5%	DIRECTION OF FLOW & GRADIENT
		DIRECTION OF FLOW
		STORMWATER TREATMENT PLANTER

ABBREVIATIONS

AB	AGGREGATE BASE
AC	ASPHALT CONCRETE
AD	AREA DRAIN
AP	ANGLE POINT
APN	ASSESSORS PARCEL NUMBER
ARV	AIR RELEASE VALVE
ASB	AGGREGATE SUBBASE
BK	BOOK
BW	BOTTOM OF WALL
B/W	BACK OF WALK
BFP	BACK FLOW PREVENTOR
BOL	BOLLARD
BOV	BLOW-OF-VALVE
BLDG	BUILDING
BRK	BRICK
BS	BOTTOM OF STEP
C&G	CURB & GUTTER
CB	CATCH BASIN
CEN	CENTER
CL	CENTERLINE
CLF	CHAIN LINK FENCE
CO	CLEAN OUT
CONC	CONCRETE
CONST	CONSTRUCT
COR	CORNER
CR	CURB RAMP
DC	DEPRESSED CURB
DI	DRAINAGE INLET
DIA	DIAMETER
DIP	DUCTILE IRON PIPE
DBL	DOUBLE
DS	DOWNSPOUT
DW	DRIVEWAY
ESMT	EASEMENT
ELEC	ELECTRICAL
ELECT	ELECTROLIER
ENCL	ENCLOSURE
ENCR	ENCROACHING
EP	EDGE OF PAVEMENT
ER	END OF RETURN
EVA	EMERGENCY VEHICLE ACCESS
EX	EXISTING
FB	FLUSH BAND
FD	FOUND
FDC	FIRE DEPARTMENT CONNECTION
FC	FACE OF CURB
FEN	FENCE
FF	FINISH FLOOR
FG	FINISH GRADE
FH	FIRE HYDRANT
FI	FIELD INLET
FL	FLOWLINE
FS	FIRE SERVICE
F/W	FRONT OF WALK
GB	GRADE BREAK
GFF	GARAGE FINISH FLOOR
GL	GARAGE LIP
GRT	GRATE
GV	GAS VALVE
HP	HIGH POINT
IM	IMAGE
INT	INTERSECTION
INV	INVERT
IP	IRON PIPE
JP	JOINT POLE
LAT	LATERAL
JT	JOINT TRENCH
LAT	LATERAL
LP	LOW POINT
MH	MANHOLE
M	MAPS
MEAS	MEASURED
MON	MONUMENT
OR	OFFICIAL RECORDS
P	PAD
PG	PAGE
PKG	PARKING
PTRO	PETROLEUM PIPE LINE
PLNT	PLANTER
PT	POINT
PIV	POST INDICATOR VALVE
PL	PROPERTY LINE
PP	POWER POLE
PS	PROTECTIVE SLOPE
PVC	POLYVINYL CHLORIDE PIPE
RC	ROLLED CURB
RCE	REGISTERED CIVIL ENGINEER
RCP	REINFORCED CONCRETE PIPE
RE	REEL
RW	RECYCLED WATER
R/W	RIGHT OF WAY
SD	STORM DRAIN
SER	SERVICE
SS	SANITARY SEWER
STB	STREET LIGHT BOX
STD	STANDARD
SQ	SQUARE
S/W	SIDEWALK
TC	TOP OF CURB
TDC	TOP OF DEPRESSED CURB
TEL	TELEPHONE
TG	TOP OF GUTTER
TRC	TOP OF ROLLED CURB
TS	TOP STEP
TSB	TRAFFIC SIGNAL BOX
TW	TOP OF WALL
TYP	TYPICAL
UB	UTILITY BOX
UTIL	UTILITY
VCP	VITRIFIED CLAY PIPE
VLT	VAULT
WB	WATER BOX
WM	WATER METER
WT	WATER
WV	WATER VALVE
WD	WOOD
XING	CROSSING

FLOOD ZONE NOTE

THE PROJECT IS LOCATED IN ZONE AH - SPECIAL FLOOD HAZARD AREA WITHOUT BASE FLOOD ELEVATION PER THE FLOOD INSURANCE RATE MAP, AND WILL BE CONDITIONED TO COMPLETE A CLOMR AND LOMR IF AVAILABLE. ALL BUILDING AREAS WILL BE RAISED ABOVE THE FLOOD PLAIN.

NO.	DATE	REVISIONS	BY

Civil Engineering Associates
Civil Engineers • Planners • Surveyors
28 Railway Ave
Campbell, CA 95008
T: (408) 453-1066

4511 Willow Road, Suite 8
Pleasanton, California 94588
Phone 925/249-3200 Fax 925/485-0291

PREPARED FOR:

Pulte HOMES

CALIFORNIA CIRCLE — PLANNING MODIFICATION

SITE DEVELOPMENT PERMIT ADJUSTMENT
PRELIMINARY GRADING & DRAINAGE PLAN

MILPITAS — CALIFORNIA

DATE	11/18/2024
SCALE	SEE PLAN
DESIGNED	JG
DRAWN	AM
JOB NO.	20158-10
SHEET	C1
	1 OF 7 SHEETS

R:\PROJECT\2020\20158-10 california circle apt - milpitas\PLANNING\PD\C1 PRELIMINARY GRADING & DRAINAGE PLAN.dwg Nov 18, 2024

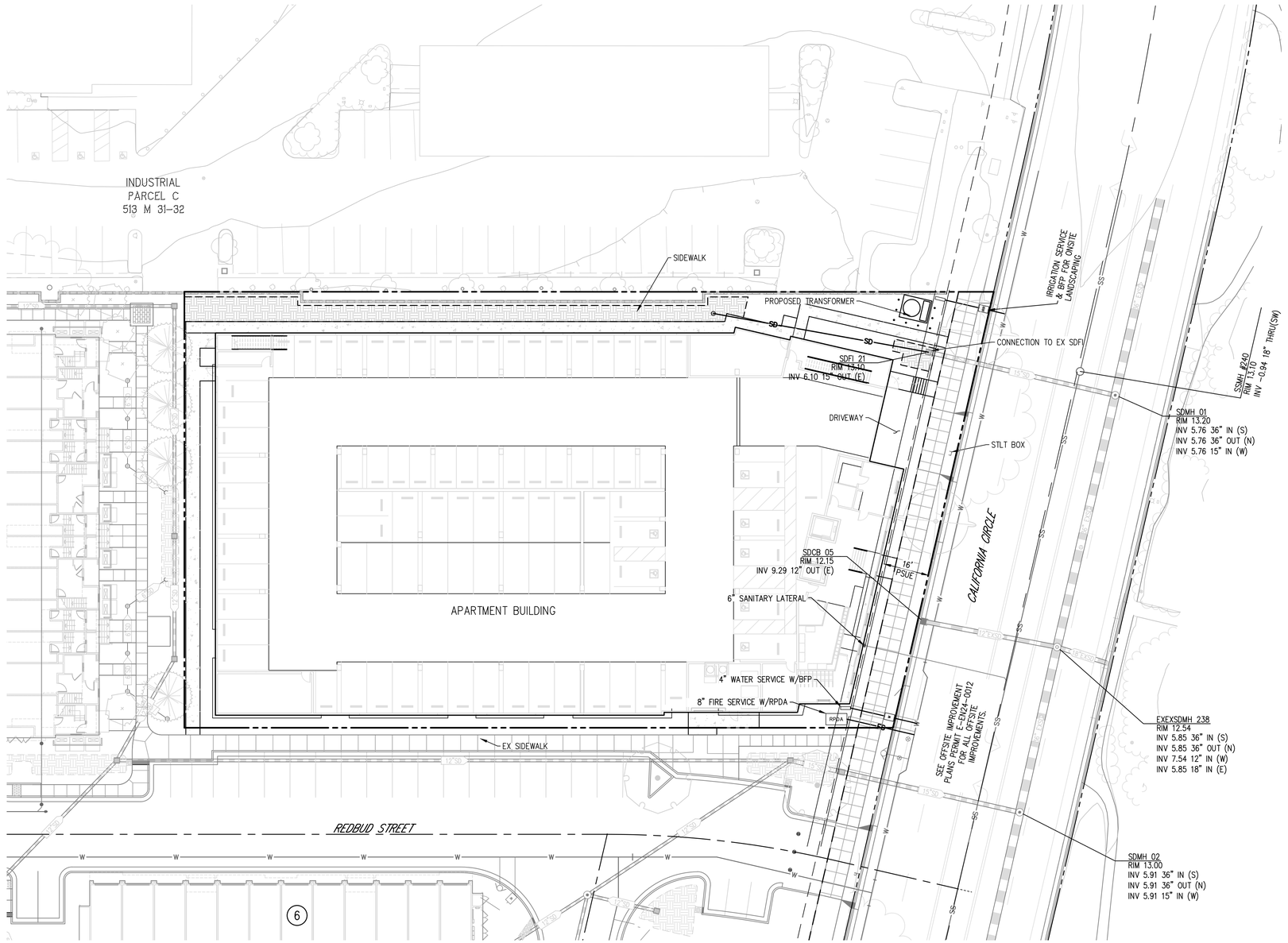

0 20 40 Feet

NOTE

1. ALL CITY UTILITY MAINS/LATERALS TO HAVE A 1' MINIMUM VERTICAL SEPARATION AT ALL UTILITY CROSSINGS.
2. ALL WATER, FIRE AND SANITARY LATERAL SIZES TO BE CONFIRMED AT THE CD PHASE.
3. ALL ONSITE STORM DRAIN LINES WILL BE PRIVATE

NO.	DATE	REVISIONS	BY

Civil Engineering Associates
Civil Engineers • Planners • Surveyors
28 Railway Ave
Campbell, CA 95008
T: (408) 453-1066

4511 Willow Road, Suite 8
Pleasanton, California 94588
Phone 925/249-3200 Fax 925/485-0291

PREPARED FOR:

Pulte HOMES

PLANNING MODIFICATION

CALIFORNIA CIRCLE — MILPITAS — CALIFORNIA

SITE DEVELOPMENT PERMIT ADJUSTMENT
PRELIMINARY UTILITY PLAN

DATE	11/18/2024
SCALE	SEE PLAN
DESIGNED	JG
DRAWN	AM
JOB NO.	20158-10

SHEET C2

2 OF 7 SHEETS

R:\PROJECT\2020\20158-10 california circle apt - milpitas\PLANNING\PD\C2 PRELIMINARY UTILITY PLAN.dwg Nov 18, 2024

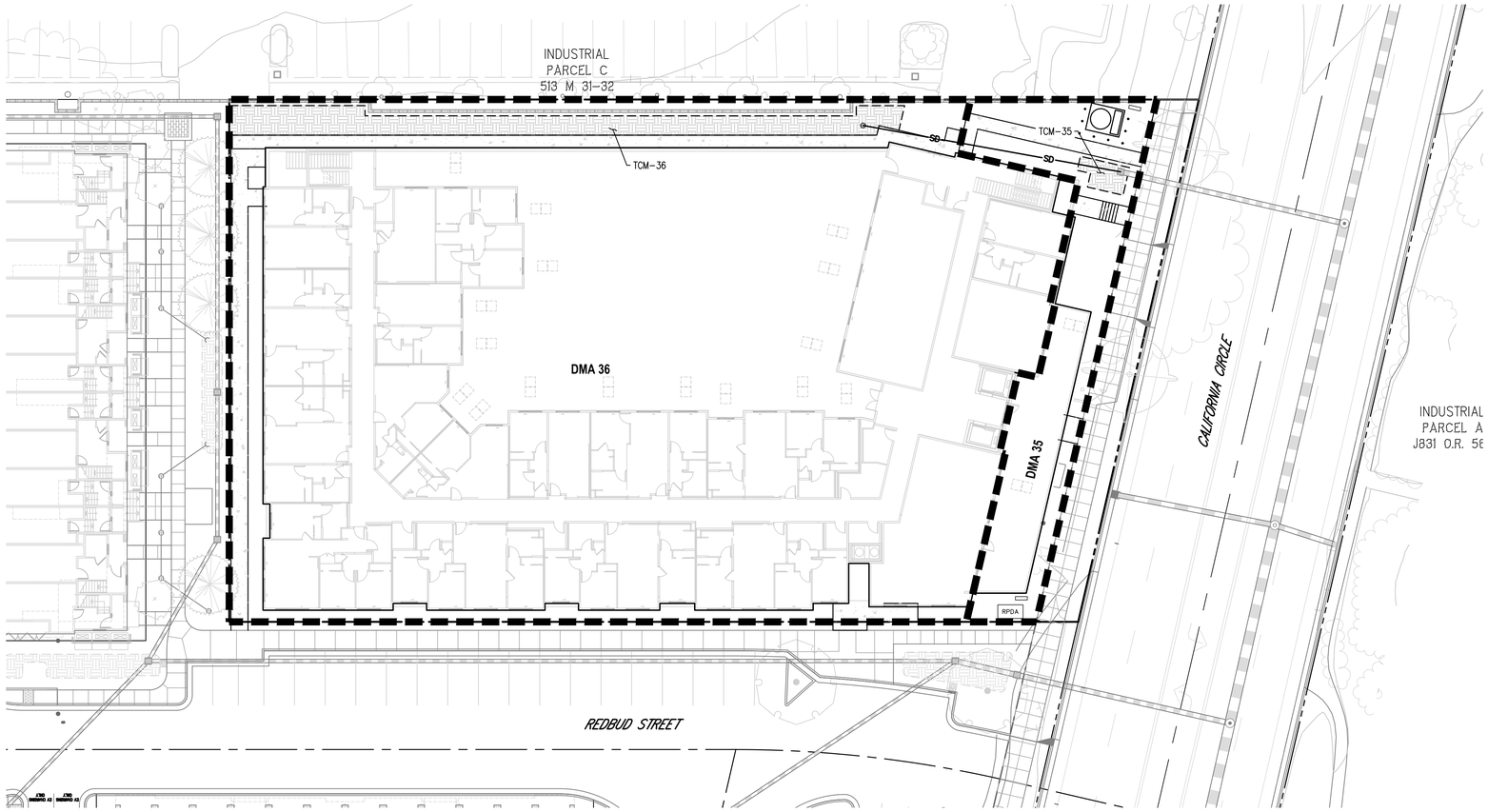

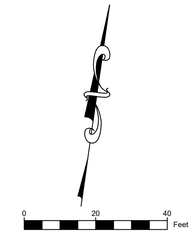

SITE INFORMATION AND NOTES

1. PROPERTY INFORMATION
   1355 CALIFORNIA CIRCLE
   MILPITAS, CALIFORNIA
   APN No. 022-38-007
   SITE AREA = 39,061 SF (6.69 AC)
2. SEE PLANNING APPROVAL SD 22-0003 FOR ORIGINAL PLANNING APPROVALS & DESIGN. ONLY DMA'S 35 & 36 ARE BEING MODIFIED PER THIS PACKAGE. THUS ONLY THESE 2 AREA ARE BEING SHOWN
3. RECEIVING SYSTEM FOR THE STORM WATER: CITY OF MILPITAS PUBLIC STORM DRAIN SYSTEM.
4. SEE SHEET C4 FOR TREATMENT CONTROL MEASURE SIZING CALCULATIONS. AREA MEASUREMENTS OF DRAINAGE MANAGEMENT AREAS PRESENTED ON THESE PLANS INCLUDE THE AREA OF THEIR ASSOCIATED TREATMENT CONTROL MEASURES.

LEGEND

- WATERSHED BOUNDARY
- WATERSHEDS TREATED WITH BIOTREATMENT
- BIOTREATMENT BASIN

NO.	DATE	REVISIONS	BY
1			
2			
3			
4			
5			
6			
7			

Civil Engineering Associates
Civil Engineers • Planners • Surveyors
28 Railway Ave
Campbell, CA 95008
T: (408) 453-1066

4511 Willow Road, Suite 8
Pleasanton, California 94588
Phone 925/249-3200 Fax 925/485-0291

PREPARED FOR:

Pulte HOMES

<DESCRIPTION>

CALIFORNIA CIRCLE

SITE DEVELOPMENT PERMIT ADJUSTMENT
STORMWATER MANAGEMENT PLAN

CALIFORNIA

MILPITAS

DATE	11/18/2024
SCALE	SEE PLAN
DESIGNED	JG
DRAWN	AM
JOB NO.	20158-10
SHEET	C3
	3 OF 7 SHEETS

R:\PROJECT\2020\20158-10 california circle apt - milpitas\PLANNING\PD\C3 STORMWATER MANAGEMENT PLAN.dwg Nov 18, 2024

STORMWATER TREATMENT SUMMARY TABLE

WATERSHED ID	**TOTAL WATERSHED AREA (SF)**	IMPERVIOUS SURFACES						PERVIOUS SURFACES					TREATMENT MEASURES			
		STREETS (SF)	SIDEWALKS (SF)	PARKING LOTS (SF)	DRIVEWAYS / HARDSCAPE (SF)	BUILDINGS (SF)	**TOTAL (SF)**	STREETS (SF)	SIDEWALKS (SF)	PARKING LOTS (SF)	LANDSCAPE (SF)	**TOTAL (SF)**	PROVIDED TREATMENT	REQUIRED TREATMENT	CALCULATION METHOD	TREATMENT METHOD
35	**3,652**	-	449	-	376	1,262	**2,087**	-	-	-	1,565	**1,565**	**107**	83	4%	BIOTREATMENT
36	**35,409**	-	1,769	-	-	29,794	**31,563**	-	-	-	3,846	**3,846**	**1,268**	1,263	4%	BIOTREATMENT
SUBTOTAL (SF)	**39,061**	-	2,218	-	376	31,056	**33,650**	-	-	-	5,411	**5,411**	**1,375**	1,346		

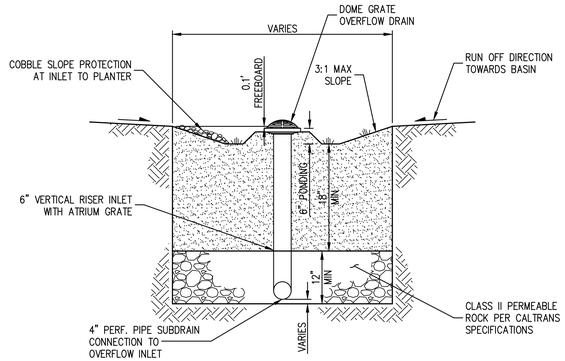

BIOTREATMENT BASIN DETAIL

NOT TO SCALE

NOTES

1. PERFORATION TO BE INSTALLED FACING DOWNWARD.
2. BIOTREATMENT SOIL MIX (BSM) SHALL CONFORM TO THE MUNICIPAL REGIONAL PERMIT REQUIREMENTS SET FORTH IN PROVISION C.3.C.i.(1)(B)(VI)
3. SEE LANDSCAPE PLANS FOR PLANTING AND IRRIGATION LAYOUT WITHIN BASIN.

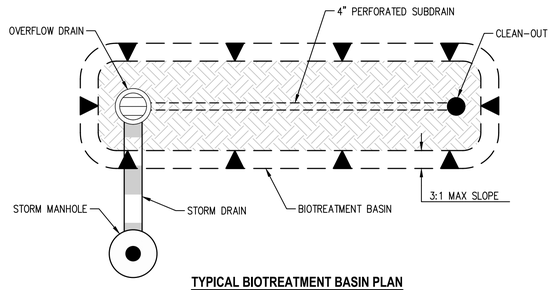

TYPICAL BIOTREATMENT BASIN PLAN

NOT TO SCALE

NO.	DATE	REVISIONS	BY

Civil Engineering Associates
Civil Engineers • Planners • Surveyors
28 Railway Ave
Campbell, CA 95008
T: (408) 453-1066

4511 Willow Road, Suite 8
Pleasanton, California 94588
Phone 925/249-3200 Fax 925/485-0291

PREPARED FOR:

PLANNING MODIFICATION

CALIFORNIA CIRCLE — MILPITAS, CALIFORNIA

SITE DEVELOPMENT PERMIT ADJUSTMENT
STORMWATER MANAGEMENT DETAILS

DATE	11/18/2024
SCALE	SEE PLAN
DESIGNED	JC
DRAWN	AM
JOB NO.	20158-10

SHEET **C4**

4 OF 7 SHEETS

R:\PROJECT\2020\20158-10 california circle apt - milpitas\PLANNING\PD\C4 STORMWATER MANAGEMENT DETAILS.dwg Nov 18, 2024

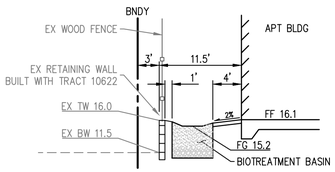

SECTION A-A
NTS

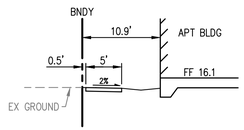

SECTION B-B
NTS

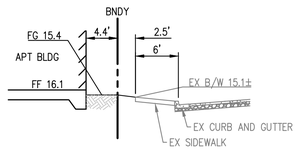

SECTION C-C
NTS

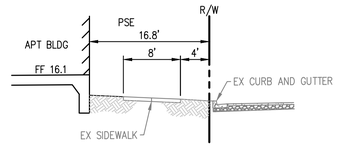

SECTION D-D
NTS

NO.	DATE	REVISIONS	BY

Civil Engineering Associates
Civil Engineers • Planners • Surveyors
28 Railway Ave
Campbell, CA 95008
T: (408) 453-1066

4511 Willow Road, Suite 8
Pleasanton, California 94588
Phone 925/249-3200 Fax 925/485-0291

PREPARED FOR:
Pulte Homes

CALIFORNIA CIRCLE
PLANNING MODIFICATION
SITE DEVELOPMENT PERMIT ADJUSTMENT
SECTIONS & DETAILS
MILPITAS CALIFORNIA

DATE	11/18/2024
SCALE	SEE PLAN
DESIGNED	JG
DRAWN	AM
JOB NO.	20158-10

SHEET
C5
5 OF 7 SHEETS

R:\PROJECT\2020\20158-10 california circle apt - milpitas\PLANNING\PD\C5 SECTIONS & DETAILS.dwg Nov 18, 2024

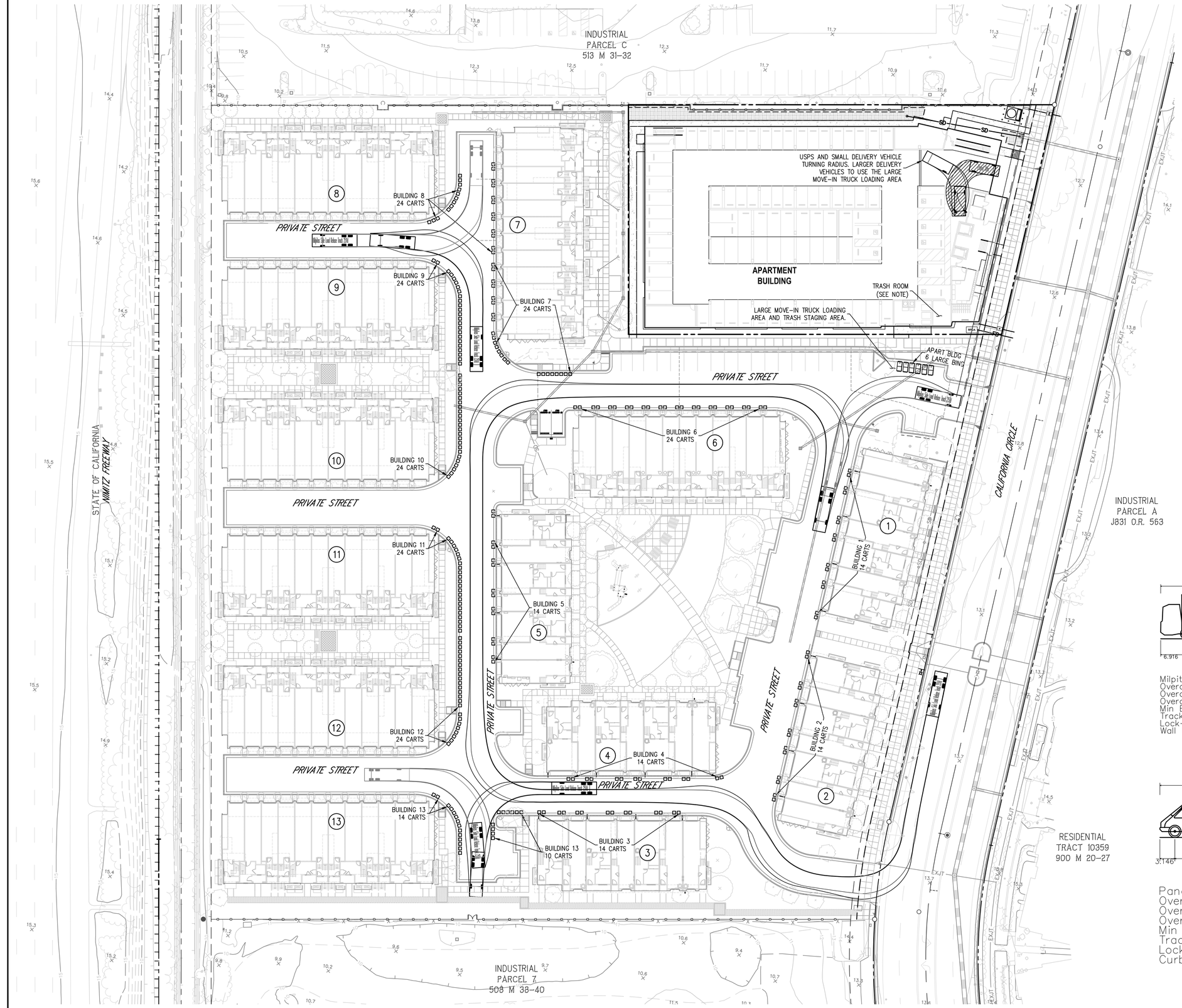

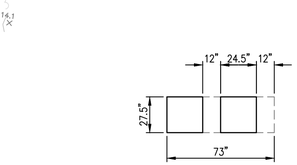

64-GALLON CART DETAIL
NTS

LEGEND

TWO ALLOCATED REFUSE BINS PER LOT. FINAL BIN SELECTION AND WASTE HANDLING SCHEME TO BE COORDINATED WITH WASTE SERVICE PROVIDER.

APARTMENT BUILDING TRASH PICKUP

TRASH PICKUP SHALL BE PROVIDED ON THE FOR-SALE TOWNHOME SITE. PROJECT CC&R'S SHALL INCLUDE RIGHTS AND PROVISIONS FOR ACCESS AND USE.

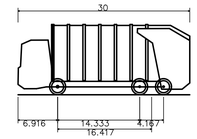

Milpitas Side Load Refuse Truck 25Yd	
Overall Length	30.000ft
Overall Width	8.500ft
Overall Body Height	12.272ft
Min Body Ground Clearance	0.961ft
Track Width	8.000ft
Lock-to-lock time	6.00s
Wall to Wall Turning Radius	38.000ft

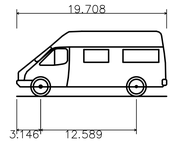

Panel Van	
Overall Length	19.708ft
Overall Width	7.320ft
Overall Body Height	8.556ft
Min Body Ground Clearance	1.248ft
Track Width	7.320ft
Lock-to-lock time	5.00s
Curb to Curb Turning Radius	22.966ft

NO.	DATE	REVISIONS	BY

Civil Engineering Associates
Civil Engineers • Planners • Surveyors
28 Railway Ave
Campbell, CA 95008
T: (408) 453-1066

4511 Willow Road, Suite 8
Pleasanton, California 94588
Phone 925/249-3200 Fax 925/485-0291

PREPARED FOR:

PLANNING MODIFICATION

CALIFORNIA CIRCLE — MILPITAS — CALIFORNIA

SITE DEVELOPMENT PERMIT ADJUSTMENT
SOLID WASTE HANDLING PLAN

DATE	11/18/2024
SCALE	SEE PLAN
DESIGNED	JG
DRAWN	AM
JOB NO.	20158-10

SHEET
C6
1 OF 7 SHEETS

R:\PROJECT\2020\20158-10 california circle apt - milpitas\PLANNING\PD\C6 SOLID WASTE HANDLING PLAN.dwg Nov 18, 2024

STATE OF CALIFORNIA
NIMITZ FREEWAY

INDUSTRIAL
PARCEL C
513 M 31–32

CALIFORNIA FIRE CODE – APPENDIX D
ACCEPTABLE ALTERNATIVE TO 120 FOOT
HAMMERHEAD

R=28.0'

PRIVATE STREET

70'

60'

150'±

93'±

81'±

192'±

135'±

56'±

128'±

285'±

91'±

White Fire Red

CALIFORNIA CIRCLE

INDUSTRIAL
PARCEL A
J831 O.R. 563

RESIDENTIAL
TRACT 10359
900 M 20–27

INDUSTRIAL PARCEL 7 508 M 38–40

0 30 60 Feet

2' CLEAR
OUTSIDE SWEPT PATH
90°
INSIDE SWEPT PATH
46.5 ft
2' CLEAR
30.0 ft
MAX. STEERING ANGLE = 32.8 deg.
6.58 ft
21.00 ft
18.50 ft
8 ft

MILPITAS FIRE TRUCK TURNING TEMPLATE

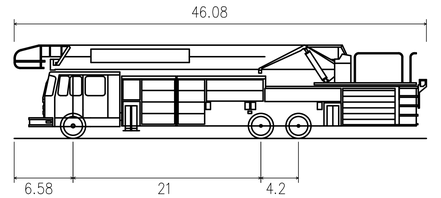

Milpitas Fire Truck	
Overall Length	46.080ft
Overall Width	8.000ft
Overall Body Height	10.432ft
Min Body Ground Clearance	0.862ft
Track Width	8.000ft
Lock–to–lock time	4.00s
Wall to Wall Turning Radius	46.500ft

LEGEND

150' LONG MAX HOSE PULL

NOTES

1. REFER TO THE ARCHITECTURAL SHEET A0.1 FOR FIRE CALCULATIONS.

NO.	DATE	REVISIONS	BY

Civil Engineering Associates
Civil Engineers • Planners • Surveyors
28 Railway Ave
Campbell, CA 95008
T: (408) 453–1066

4511 Willow Road, Suite 8
Pleasanton, California 94588
Phone 925/249-3200 Fax 925/485-0291

PREPARED FOR:

PLANNING MODIFICATION

CALIFORNIA CIRCLE

SITE DEVELOPMENT PERMIT ADJUSTMENT
FIRE TRUCK ACCESS PLAN

CALIFORNIA

MILPITAS

DATE	11/18/2024
SCALE	SEE PLAN
DESIGNED	JG
DRAWN	AM
JOB NO.	20158–10
SHEET	C7
	1 OF 7 SHEETS

R:\PROJECT\2020\20158–10 california circle apt – milpitas\PLANNING\PD\C7 FIRE TRUCK ACCESS PLAN.dwg Nov 18, 2024

PODIUM LEVEL COURTYARD
(SEE SHEET L.3)

ADJACENT INDUSTRIAL
(NOT A PART)

GROUND LEVEL LANDSCAPE
(SEE SHEET L.2)

PROPERTY LINE

PROPERTY LINE

ADJACENT
IMPROVEMENTS
UNDER SEPARATE
SUBMITTAL
(NOT A PART)

AMENITY

AMENITY

ELEV.
LOBBY

AMENITY

PROPERTY LINE

CALIFORNIA CIRCLE

RPD

PROPERTY LINE

ADJACENT IMPROVEMENTS
UNDER SEPARATE SUBMITTAL
(NOT A PART)

PODIUM LEVEL VIEW TERRACE
(SEE SHEET L.3)

NOTE:
REFER to SITEWIDE LANDSCAPE PLANS PREPARED by VanderToolen Associates for SHRUB, GROUNDCOVER and WATER QUALITY PLANT LEGENDS and NOTES

CANYON PARK STUDIO
LANDSCAPE ARCHITECTURE
949.612.5191
canyonparkstudio.com
910 Dogwood Street /// Costa Mesa, CA 92627

Pulte HOMES

CA CIRCLE - AFFORDABLE
1355 California Circle,
Milpitas, CA 95035
240196

SITE DEVELOPMENT PERMIT
ADJUSTMENT
November 15, 2024

0' 5' 10' 20'

COMPOSITE LANDSCAPE PLAN

L.1

ADJACENT INDUSTRIAL
(NOT A PART)

EXISTING WALL/FENCE with 5 GAL.
CLIMBING VINES LOCATED 15' O.C.

4' WIDE CONCRETE WALKWAY

WATER QUALITY PLANTER, TYP.
- see Civil Engineer's Plans

PROPERTY LINE

PARKING
STRUCTURE

PROPERTY LINE

ADJACENT
IMPROVEMENTS
UNDER SEPARATE
SUBMITTAL
(NOT A PART)

LEASING

LOBBY

MAIL

RPD

RPDA

PROPERTY LINE

CALIFORNIA CIRCLE

PROPERTY LINE

ADJACENT IMPROVEMENTS
UNDER SEPARATE SUBMITTAL
(NOT A PART)

LADDER PAD, TYP.
- per Fire Dept. Requirements

LAGERSTROEMIA x 'NANCHEZ'
WHITE FLOWERING CRAPE MYRTLE TREE
24" BOX, LOW WATER USE, (8) TOTAL

REFER to STREETSCAPE IMPROVEMENT
PLANS PREPARED by VanderToolen Associates
FOR STREET TREES, PARKWAY PLANTING and
WALKWAY

NOTE:
REFER to SITEWIDE LANDSCAPE PLANS PREPARED by VanderToolen Associates for SHRUB, GROUNDCOVER and WATER QUALITY PLANT LEGENDS and NOTES

CANYON PARK STUDIO
LANDSCAPE ARCHITECTURE
949.612.5191
canyonparkstudio.com
910 Dogwood Street /// Costa Mesa, CA 92627

Pulte HOMES

CA CIRCLE - AFFORDABLE
1355 California Circle,
Milpitas, CA 95035
240196

SITE DEVELOPMENT PERMIT
ADJUSTMENT
November 15, 2024

0' 5' 10' 20'

GROUND LEVEL LANDSCAPE PLAN

L.2

POTTERY WITH EVERGREEN SHRUBS

SHADE STRUCTURE with FURNISHINGS

DINING TERRACE
- barbecues
- picnic tables
- raised planter with flowering accent trees

CHILDREN'S PLAYGROUND
- separate play equipment for ages 2-5 and 5-12
- resilient surfacing
- benches

LADDER PAD, TYP.
- per Fire Dept. Requirements

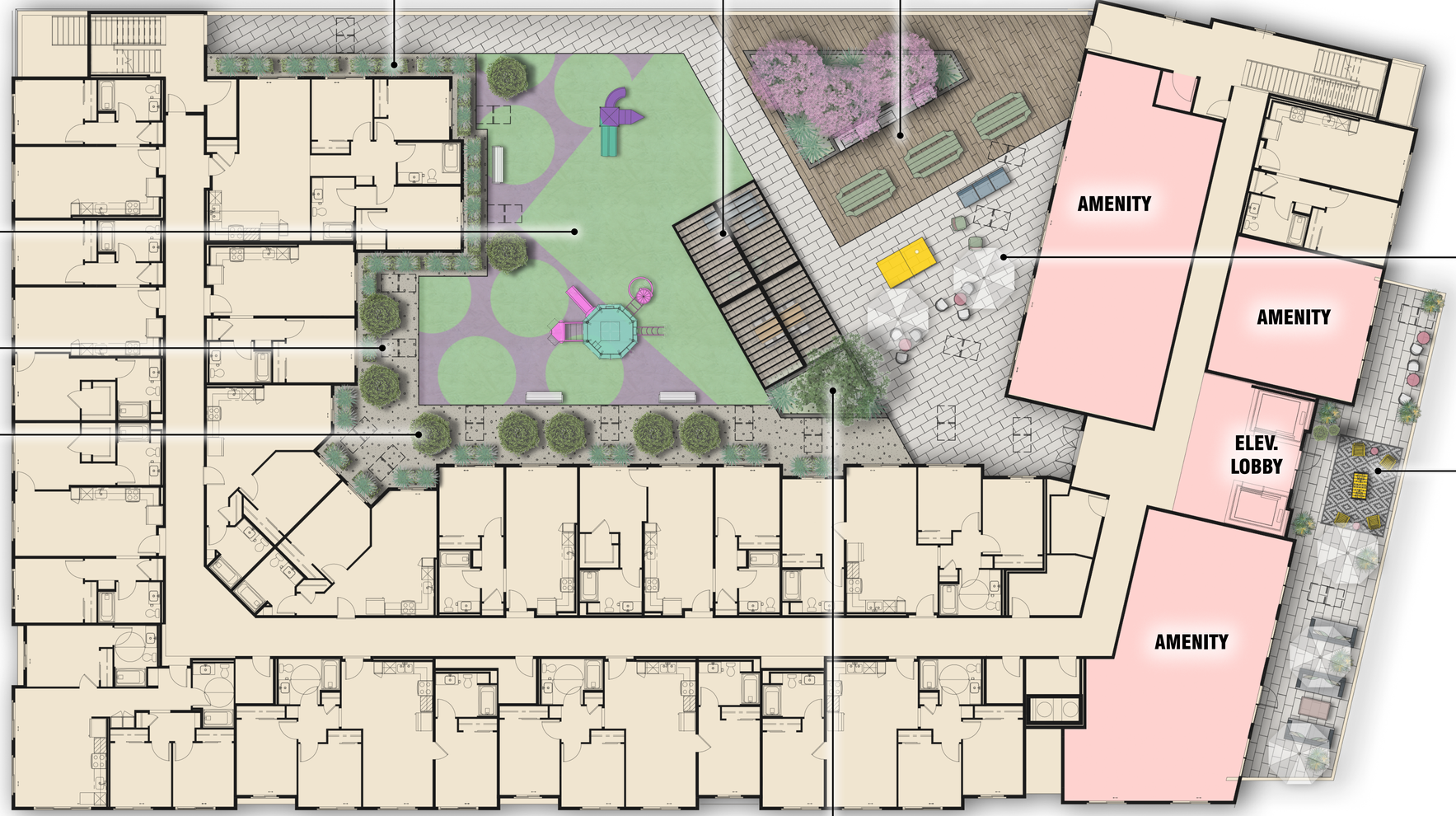

CLUB TERRACE
- lounge seating
- ping pong table
- umbrellas

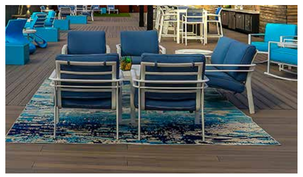

PRUNUS BRIGHT 'N' TIGHT in LARGE POTS'
CAROLINA LAUREL
24" BOX, LOW WATER USE, (9) TOTAL.

VIEW TERRACE
- pottery
- lounge furniture
- game table
- umbrellas

OLEA EUROPEA 'WILSONII'
FRUITLESS OLIVE TREE
36" BOX, LOW WATER USE, (1) TOTAL

NOTE:
REFER to SITEWIDE LANDSCAPE PLANS PREPARED by VanderToolen Associates for SHRUB, GROUNDCOVER and WATER QUALITY PLANT LEGENDS and NOTES

CANYON PARK STUDIO
LANDSCAPE ARCHITECTURE
949.612.5191
canyonparkstudio.com
910 Dogwood Street /// Costa Mesa, CA 92627

Pulte HOMES

CA CIRCLE - AFFORDABLE
1355 California Circle, Milpitas, CA 95035
240196

SITE DEVELOPMENT PERMIT ADJUSTMENT
November 15, 2024

0' 5' 10' 20'

PODIUM LEVEL LANDSCAPE PLAN

L.3

CITY OF MILPITAS
AGENDA REPORT
(AR)

Item Title:	**Adopt a Resolution Approving a General Plan Amendment to Update the Town Center (TWC) and Neighborhood Commercial Mixed-Use (NCMU) Descriptions and an Ordinance Approving a Zoning Amendment to Establish the NCMU District and Update the Existing Town Center District to Create Housing Opportunity Districts (HODs) (Staff Contact: Jay Lee, Planning Director, 408-586-3077)**
Category:	Public Hearings-Community Development
Meeting Date:	4/15/2025
Recommendation:	(1) Conduct a public hearing and determine that the Environmental Impact Report (EIR) Addendum and Supplemental Letter to the Addendum adequately analyze the potential environmental impacts associated with the proposed General Plan and Zoning Amendments and are in compliance pursuant to CEQA Guidelines §15162 and §15164, (2) Adopt a resolution approving General Plan Text and Map Amendment No. GP24-0001 to update the Town Center (TWC) and Neighborhood Commercial Mixed-Use (NCMU) descriptions and amend the land use designation of certain parcels; and (3) Move to waive the first reading beyond the title and Introduce Ordinance No. 38.857 approving Zoning Text and Zoning Map Amendment No. ZA24-0001 to establish the Neighborhood Commercial Mixed-Use (NCMU-1,2,3) district and subdistricts, and update the existing Town Center (TC districts to establish the subdistricts (TC-1,2,3).

BACKGROUND:

Since 1969, California law has required all cities and counties to plan to meet housing goals for residents at all income levels. Every eight years, the California Department of Housing and Community Development (HCD) and the Association of Bay Area Governments (ABAG) distribute the Regional Housing Needs Allocation (RHNA) to each City and County in the Bay Area. The City is then required to perform a comprehensive update to the Housing Element, which is a chapter in the General Plan. The Housing Element identifies specific programs and policies that the City commits to implement to help realize the City's RHNA goals and respond to related needs. When the City adopted its most recent General Plan on March 9, 2021, one aspect of its overall development plan and efforts to meet increasing housing needs was the expansion of multifamily residential opportunities in and around commercial space and aging centers to encourage and support commercial redevelopment and economic activity in these areas. When the City adopted its most recent Housing Element on January 24, 2023, that plan identified the opportunity and ability for greater residential growth in several areas of the City, including the Town Center (TWC) and Neighborhood Commercial Mixed Use (NCMU) zones and proposed additional planning and study to fulfill this opportunity and need.

In response to California's pressing affordable housing shortage and homelessness crisis, Governor Newsom's 2019-20 Budget Act earmarked $250 million for initiatives addressing these challenges. Notably, $119 million was allocated to the Local Early Action Planning Grant (LEAP), an essential non-competitive program empowering cities and counties to update planning documents and expedite housing production.

On June 29, 2020, the City of Milpitas applied for LEAP funding to establish Housing Opportunity Districts (HODs) in priority areas outlined in its General Plan. The HODs are designed to incentivize housing by allowing increased density, relaxing standards, and streamlining permitting processes to facilitate housing, especially affordable housing production. On September 2, 2020, HCD informed staff that the City of Milpitas had been awarded $300,000 in grant funds through the LEAP Program to establish the Housing Opportunity Districts (HOD).

On December 7, 2021, the City Council approved and authorized the City Manager to execute a professional services agreement with Raimi + Associates (Raimi) to prepare the HODs in close coordination with related efforts underway, including the Metro and Gateway Specific Plans, the Housing Element Update, and a separate Assessment of Fair Housing. Per the grant agreement, the HODs project must be completed by June 30, 20244. Although this deadline has passed, HCD has granted the City extra time to close out the project.

The HOD project plays a critical role in implementing both the General Plan and the Housing Element to increase housing in the city while creating vibrant mixed-use neighborhoods.

Work Completed

- **Best Practices Memo:** The memo provides an overview of example HODs from other cities, especially as they relate to the creation of affordable housing units and housing for special needs populations. Three of the examples focus on affordable housing and one on senior housing. Each precedent study identifies strengths and weaknesses that can inform the consideration and development of new HODs in Milpitas.
- **Planning Documents and Process Assessment:** The assessment memo reviews and summarizes existing planning documents and ordinances that impact the development of housing across the City and identifies strengths that can be enhanced and weaknesses that can be overcome through HODs.
- **Existing Conditions Analysis:** The analysis of existing conditions examines each potential HOD area and estimates the feasible development capacity based on Milpitas' current land use and zoning policies and regulations. Topics covered include the existing land use pattern, parcel size, pipeline projects, access to multimodal transportation options, site constraints, and opportunity sites.
- **Stakeholder Meetings:** Raimi and City staff presented an overview of HODs at the May 2022 Community Development Roundtable and subsequently conducted stakeholder interviews with non-profit and for-profit housing developers to better understand the constraints to building both mixed-income and 100 percent affordable housing projects.
- **1st City Council Progress Report:** On August 9, 2022, the City Council received a progress report on the work completed and existing conditions analysis from Raimi and staff on the HODs, discussed Project objectives and priorities, and provided direction on key planning concepts and land use strategies.
- **Video presentation and survey:** Recognizing the technical nature and limited geographic scope of the Project, the team produced a series of informative videos that outlined the Project's intricacies and presented draft recommendations. The videos were published on the City's website and were followed by an open-ended survey asking the viewers to give feedback on the draft recommended standards for the NCMU and TC areas.
- **Pop-up Stations:** The City hosted four dedicated pop-up events at four different locations, which allowed City staff an opportunity to explain the Project in person. Visitors, business owners, and property owners were directed to watch the informative videos and take part in the survey to provide feedback.
- **2nd City Council Progress Report:** On October 17, 2023, the City Council received a progress report on the HODs from Raimi and staff and provided feedback on the preferred alternative.
- **Draft HOD Project and CEQA:** Raimi prepared an internal Administrative Draft of the HODs for staff review and initiated the environmental review process per the California Environmental Quality Act (CEQA). The environmental review, conducted by Rincon Consultants, Inc., established an Addendum to the Milpitas General Plan 2040 EIR State Clearinghouse #2020070348.
- **Planning Commission Hearing:** On April 24, 2024, the Planning Commission held a public hearing on the HODs. The Planning Commission (5-0) recommended that the City Council approve the Project.
- **Additional Community Meetings:** Following the Planning Commission hearing, staff held three follow-up community meetings on May 30, 2024, August 26, 2024, and December 9, 2024, to further discuss the Project and address community concerns. The meetings were well attended, with 45 community members at the first meeting, 27 at the second meeting, and 39 at the third meeting. Community members had concerns about the Project regarding the City's existing infrastructure, including potential traffic impact to the City, particularly on and around Landess Avenue, parking, school district student capacity, potential building heights and privacy, affordable housing and the potential for increase in crime, property values, fiscal impact to the City, and lack of healthcare. As a result of these meetings,

staff has modified the proposed development standards within the HODs, as well as removed certain parcels from the HOD Project area.

Project Goals
The HOD Project was initiated to increase the housing supply in the City of Milpitas while simultaneously reducing barriers associated with new housing construction. The overarching goals of the HOD Project include:

Implementing General Plan policies
The HOD is intended to implement several General Plan policies identified through an extensive public input process.

Meeting current and future regional housing needs (RHNA)
The City fell short in meeting its very low-, low-, and moderate-income regional housing targets over the implementation phase of the previous Housing Element and needs to plan for more housing, especially affordable housing, to overcome its housing shortfall.

Incentivizing affordable housing
Another goal is to incentivize affordable and special needs housing in the City. By creating tailored zoning regulations, these zones will help facilitate the production of all housing types. Moreover, 100 percent affordable housing projects in NCMU and TWC are exempt from non-residential requirements.

Revitalizing aging shopping centers
Many existing commercial centers are underperforming, and their redevelopment as mixed-use projects may revitalize public spaces while adding to the City's tax base.

ANALYSIS:
Project Summary
The HOD Project introduces a comprehensive General Plan amendment and zoning update within the NCMU and the TC areas of the City to allow for horizontal and vertical mix of uses, enhancing the viability of mixed-use projects.

Based on the analysis completed for this HOD Project, the proposed zoning adopts a place-based and flexible approach. It establishes three distinct NCMU zones (NCMU1, NCMU2, and NCMU3) and three TC zones (TC1, TC2, and TC3). These zones consider parcel size, location, current use, and future potential. Each zone permits increased residential density and a reduced minimum non-residential floor area ratio (FAR), promoting versatility in development. Concurrently, the Project outlines General Plan amendments to update the definitions associated with these land use designations, as well as a General Plan land use map amendment.

The proposed NCMU Zones are:

1. NCMU1: includes big box retail and grocery stores with large surface parking lots. Parcels designated NCMU1 require a minimum 0.20 FAR of non-residential use for mixed-use developments, with a 0.50 FAR maximum. No minimum FAR for commercial only projects.
2. NCMU2: includes smaller parcels with commercial uses along streets, which are ideal for mixed-use development. Parcels designated NCMU2 require a minimum of 0.1 FAR of commercial use, primarily on the ground floor with residential units above, for the first 100 feet of parcel depth fronting a public street, with a 0.50 FAR maximum. No minimum FAR for commercial only projects.
3. NCMU3: includes parcels that are less suitable for commercial use, such as those located on secondary streets, lacking street frontages, or adjacent to residential zones. NCMU3 would allow commercial, mixed-use, or residential-only development with no minimum commercial requirement. No minimum FAR for commercial only projects, but there is a 0.50 FAR maximum.

In all three NCMU zones, the maximum FAR does not apply to hotels. Building heights are limited to 60 feet and five stories.

Figure 1: NCMU Zone locations

Changes since April 2024
Following staff's presentation at the April 24, 2024 Planning Commission hearing, staff held three community meetings to discuss community concerns. As a result, staff has modified the development standards within the NCMU zoning districts, as well as removed three parcels (APNs 088-34-109, -110, and -111) from the NCMU Landess area. Specifically, staff is recommending lowering the density from 65 du/acre to 60 du/acre for all three NCMU zones and lowering the maximum building height from 75 feet to 60 feet, or five stories, whichever is less. Additionally, the minimum rear yard setback on lots that abut single-family residential zones has been increased from 15 to 25 feet. Staff also has reduced the commercial FAR minimums and maximums for mixed-use projects in all three NCMU zones, and added clarifying language regarding FAR minimums for commercial-only projects and FAR maximums for hotel projects. The FAR revisions are a result of speaking with developers and property owners.

The intent of the HODs Project is to allow mixed-use buildings horizontally and vertically, while also allowing for financially feasible development projects that incentivize affordable housing. The Housing Element identified that the minimum requirement of commercial FAR for mixed-use projects may impede redevelopment of parcels in these zones. By reducing the commercial FAR minimums and maximums for mixed-use projects, HODs makes redevelopment financially feasible for private developers and property owners. The General Plan Text Amendment accompanying this Project contemplates a maximum commercial FAR up to 0.5 within these areas and says that the NCMU designation is intended to accommodate a vertical and horizontal mix of commercial and residential uses with an emphasis on neighborhood commercial activity. Moreover, the existing General Plan language says that this designation provides opportunities for vertical and horizontal mixed-use residential development to provide for area vibrancy and to encourage the development of aging commercial centers. Although the minimum and maximums commercial FARs are lower than previously presented, the HOD Project still meets the intent of the General Plan NCMU land use designation. The original memorandum (Attachment B) lays out the initial framework and development standards. However, the revised development standards and General Plan Map changes are reflected within Exhibit A to Exhibit 1 of Attachment E and Exhibit A to Exhibit 1 of Attachment A, respectively.

The proposed TC Zones are:

1. TC1: includes some successful big box retail centers with long-term leases with large surface parking lots. Parcels designated TC1 require a minimum 0.35 FAR of non-residential use for mixed-use developments.
2. TC2: includes smaller parcels with commercial uses along streets, which are ideal for mixed-use development. Parcels designated TC2 require a minimum of 0.1 FAR of commercial use, primarily on the ground floor with residential units above.

3. TC3: includes parcels that are less suitable for commercial use, such as those located on secondary streets, lacking street frontages, or adjacent to residential zones. TC3 would allow commercial, mixed-use, or residential-only development with no minimum commercial requirement.

In all three TC zones, the maximum FAR is limited to 0.85. The maximum does not apply to hotels. Building heights are also limited to 75 feet or six stories, whichever is less.

Figure 2: TC Zone locations

Furthermore, the HOD Project recommends a reduction in parking and open space requirements, aiming to enhance project feasibility. These proposed adjustments align with the overarching goals of the General Plan, specifically focusing on revitalizing aging shopping centers and fostering the creation of dynamic mixed-use neighborhoods.

Changes since April 2024
As a result of the community meetings and further outreach with property owners in 2024, staff has modified the development standards within the TC zoning districts. Specifically, staff is recommending increasing the maximum allowable density from 55 to 65 du/acre and added clarifying language regarding commercial FAR minimums and maximums and building height. The original memorandum (Attachment B) lays out the initial framework and development standards. However, the revised development standards are reflected within Attachment E.

Other Development Standards

Parking
Parking standards in Milpitas are generally high, except in Specific Plan areas. Accommodating a greater number of parking spaces would require substantial surface area or large structured parking garages, consequently increasing the cost of the project. Thus, to enhance the feasibility of housing development in the NCMU and TC zones, the HOD Project proposes a reduction in the residential parking requirement.

Lower parking ratios will apply to areas designated NCMU and TC. For projects located in NCMU and TC:

- The minimum number of parking spaces required for residential uses shall be 1 space per unit.
- The minimum number of parking spaces required for commercial use shall be 1 space per 300 square feet of commercial use.

These standards are set at levels that provide adequate parking for the contemplated uses while facilitating a higher density of development these zones are designed to accommodate.

Parks and Open Space
To allow housing or mixed-use developments in the NCMU and TC zones, the HOD Project proposes a reduction in the park land requirement compared to the citywide standard. Nevertheless, considering heightened population densities, it is crucial to emphasize the significance of high-quality open spaces in contributing to placemaking for both existing and future residents. A minimum of 25 percent of the total site shall be usable open space or recreational facilities. This goes above and beyond the existing 5 or 10 percent Objective Design Standard (ODS) requirements the City has generally adopted to promote a variety of vibrant, publicly or private accessible spaces that encourage gathering and other active uses.

For projects located in the NCMU and TC zones, the following standards shall apply:

- **Park Land**. All residential projects in the NCMU and TC areas shall provide park land at a ratio of three and one-half (3.5) acres per one thousand (1,000) population. This is a reduction from the citywide requirement of five (5) acres per one thousand (1,000) population.
- **Publicly Accessible Parks and Open Spaces.** All mixed-use or residential-only projects on sites between 3 acres and 5 acres shall dedicate 5 percent of total site area to publicly accessible parks and open space. All mixed-use or residential-only projects greater than 5 acres shall dedicate 10 percent of total site area to publicly accessible parks and open space. Publicly accessible parks and open spaces provided to meet the requirement below may be counted towards the park land requirement above.
- **Usable Open Space.** A minimum of 25 percent of the total site shall be usable open space or recreational facilities. Usable open space may be provided as Common Open Space or Private Open Space.

General Plan Implementation
The HODs will be a critical implementation tool of the 2040 General Plan, which identifies several opportunity areas throughout the City for future housing development. These areas include the two Specific Plan areas (Metro Specific Plan and Gateway-Main St. Specific Plan), four NCMU areas, and the Town Center. The City adopted its updated Metro Specific Plan on February 7, 2023 and is currently updating its Gateway-Main St. Specific Plan. The HODs will apply to three NCMU areas (as shown in Figure 1: NCMU Zone Locations) and the Town Center, where much of the future housing development is expected to occur. However, the current policies and requirements of the NCMU and TWC land use designations need to be refined to facilitate and incentivize mixed-use redevelopment in these areas and increase local commercial activity.

The NCMU land use designation establishes a ratio of one residential dwelling unit per 1,500 square feet of neighborhood-serving retail and commercial services for new mixed-use developments. While this requirement is intended to incentivize the redevelopment of older strip retail centers into new mixed-use projects, redevelopment is unlikely to occur under the current policy framework. Based on the analysis completed for the HOD project, the consultant team and staff now favor a clear allowable density range rather than a ratio between residential and nonresidential floor area. In the NCMU areas, the HODs proposes a maximum residential density of 60 dwelling units per acre and a minimum commercial FAR of 0.10 or 0.20 depending on the parcel. 100 percent residential projects are allowed in certain areas adjacent to existing residential neighborhoods.

The TWC land use designation allows 40 residential dwelling units per acre for mixed-use developments but requires a high FAR of 0.35 for nonresidential uses. While the purpose of the nonresidential FAR requirement is to ensure that the Town Center retains its commercial activity over time, it presents a constraint to redevelopment. The current FAR of the Town Center north of Calaveras Boulevard is well below 0.35 and any redevelopment would require an additional 323,000 square feet of nonresidential floor area, which is highly unlikely in the current economic climate. In the TWC area, the HODs proposes a maximum residential density of 65 units per acre and a reduced minimum commercial FAR of 0.10 in areas ripe for redevelopment. Like the NCMU designation, 100 percent residential projects are allowed in certain areas adjacent to existing residential neighborhoods.

The HODs will build upon new General Plan policies for the NCMU and TWC areas by providing a more implementable strategy to achieve the overall goal of creating vibrant mixed-use neighborhoods in key areas throughout the City. The HODs will adopt a place-based approach to facilitate mixed-use redevelopment of specific sites within these areas while allowing viable commercial centers to remain.

Relevant General Plan goals and policies related to NCMU and TWC include:

- *Goal LU-1: Accommodate a well-balanced mix of land uses that meet the diverse needs of Milpitas residents, businesses, and visitors with places to live, work, shop, be entertained and culturally enriched.*

- *Goal LU-6: Support commercial centers that serve residential neighborhoods and provide for a variety of convenient, successful and attractive commercial uses throughout the city.*

- *Policy LU 6-4 Maintain viable neighborhood-serving commercial uses throughout the City in order to serve surrounding neighborhoods and minimize vehicle miles traveled. Encourage a diverse mix of commercial uses including retail, service, office, entertainment, and assembly uses.*

- *Policy LU 6-5 Promote reinvestment in strip commercial and shopping centers and maintain, revitalize, and redevelop aging and underperforming centers.*

- *Policy LU 6-6 Encourage redevelopment and intensification of mixed-use areas by allowing standalone vertical mixed-use, or integrated horizontal mixed-use projects in mixed use areas, consistent with the Land Use Map and policies and actions included in this element.*

The HOD Project reexamines these land use designations and proposes a General Plan amendment to align them with the evolving needs and goals of the community.

Housing Element Implementation

In January 2023, the City of Milpitas approved its 6th Housing Element, which outlines programs and actions the City will undertake to fulfill its regional housing growth obligations (RHNA). In the current RHNA cycle (2023-2031), the City of Milpitas has been allocated 6,713 units, more than double the allocation from the previous cycle. Furthermore, 3,786 of the units must be affordable (i.e., below market rate), with 2,655 of those units at the low- or very-low-income affordability level, which the City historically has struggled to provide.

To address this challenge, the HODs will focus on providing practical and effective incentives for developers to build affordable housing, especially at deeper affordability levels. The Housing Element Update will rely on the HODs as a key program to implement its policies and help the City fulfill its housing goals and needs.

Relevant Housing Element goals and policies related to NCMU and TWC include:

- *Goal HE-3: Continually assess the barriers to new housing production and proactively mitigate the governmental constraints to new housing development.*

- *Policy HE 3.3: Implement recommendations in the Housing Opportunity Zone (HOZ) study to reduce barriers to new affordable housing production while balancing the need for convenient neighborhood-serving retail stores and services for existing and future residents.*

- *Policy HE 3.7: Support the adaptive reuse, renovation, conversion, or redevelopment of economically underutilized properties or buildings for residential or mixed-use development.*

The Housing Element identified the existing General Plan definitions of NCMU and TWC as restrictive and potential barriers to new housing development. The NCMU designation also falls short of the minimum density threshold deemed effective for contributing to low-income housing, as stipulated by the State's Housing and Community Development (HCD) department guidelines to accommodate RHNA in the Housing Element. To overcome this constraint, the Housing Element identified an action to establish HODs with higher residential densities, flexible commercial and development requirements, and incentives for affordable housing.

Findings for Approval

A finding is a statement of fact relating to the information that the City Council has considered in making a decision. Findings shall identify the rationale behind the decision to take a certain action. The Municipal Code specifies that the following findings are necessary for the action contemplated:

General Plan Amendments (Milpitas Municipal Code Section XI-10-57.02(G) (1) (a), (b))

1. *The proposed amendment is internally consistent with those portions of the General Plan which are not being amended.*

   The proposed General Plan Map and Text Amendments are found to be internally consistent with those portions of the General Plan which are not being amended. The amendments do not introduce any conflicts or inconsistencies with the existing goals, policies, or programs of the General Plan. Instead, they build upon the existing framework of the General Plan, enhancing its effectiveness and relevance to current and future planning efforts. The General Plan envisioned opportunities in the NCMU for redevelopment of aging commercial centers by allowing multifamily dwelling units. The proposed changes facilitate this overall objective for the Project area consistent with planning objectives throughout the City and in a manner that is consistent and flexible with redevelopment needs. The General Plan similarly envisioned opportunities in the TWC for mixed-use and residential only projects that increase economic support for the commercial uses. These changes further the redevelopment of major shopping centers in these areas in a manner that supports economic growth. These changes also further the larger objectives of the General Plan for supporting the community's housing needs and guiding that development towards areas that can support this growth. The proposed changes are carefully integrated into the existing General Plan, ensuring that they align with its overall vision and objectives.

   Pursuant to California Government Code Section 65863:

   The Project scope includes a General Plan Map Amendment to remove the NCMU land use designation and to revert the land use designation back to General Commercial (GNC) on certain parcels. Although this would remove the allowance of housing on certain parcels, the proposed overall density in both TWC and NCMU General Plan land use designations have been greatly increased. Further, the Project site or a portion thereof was not identified in the Housing Element to accommodate a portion of the regional housing need. The 2021 General Plan update established the new NCMU land use designation, but the Zoning Ordinance had not yet been updated to reflect this change. For the Housing Element Sites Inventory, only vacant parcels or parcels with developer interest with the NCMU land use designation were considered with an assumed maximum density of 30 dwelling units per acre. Additionally, Program 15 of the Housing Element sets a goal to foster the development of at least 200 affordable housing units in the housing opportunity zones (districts) (TC and NCMU). Based on the City's Affordable Housing Ordinance (AHO), which requires 15 percent of total units to be affordable within a new development project, the Program 15's goal of 200 affordable units, and HCD's requirement to plan for at least a 30 percent buffer in planning for residential units, the minimum number of residential units needed to comply with the Housing Element is 1,733 units. Moreover, the Project would result in approximately 2,156 new residential housing units compared to existing conditions across both districts, which greatly exceeds the minimum number required for Housing Element compliance. Any reduction in residential density, as defined in Government Code Section 65863(g), is consistent with the General Plan, together with the Housing Element, because the Project continues to remove potential barriers to redevelopment of housing projects while preserving necessary commercial opportunities that will support that development and fulfill the planned vision of these zones. The Project's residential density is consistent with the Housing Element, and the remaining sites identified in the Housing Element remain unchanged and are adequate to meet the requirements of Government Code Section 65583.2 and accommodate the City's share of the regional housing need pursuant to Section 65584. This finding demonstrates that the Project is not subject to Government Code Section 65583.2 and will still ensure that the City can accommodate the remaining

share of the regional housing need pursuant to Section 65584.

2. *The proposed amendment will not adversely affect the public health, safety, and welfare.*

   The proposed General Plan Map and Text Amendment are found to be consistent with the overall planning objectives and goals of the City of Milpitas. The map amendments affect a small number of parcels. The amendment is necessary to accommodate changing community needs and to promote sustainable growth within the city. The amendment aligns with the City's vision for responsible land use planning, economic development, and environmental stewardship. Additionally, the amendment is in compliance with applicable state and local laws, including the CEQA. The proposed changes are supported by relevant data and analysis, demonstrating that they will not result in adverse impacts on the environment or public health, safety, or welfare. These changes increase housing and affordable housing stock to meet growing regional needs and expand the opportunity and flexibility of mixed-use development in areas identified by the City of being capable of sustaining additional and denser residential development. Also, the City retains authority through discretionary approvals to address project-specific health, safety, and welfare concerns. This amendment enables the City to modify its current Mixed Use Designations to prioritize the preservation of existing neighborhoods, channeling new housing growth to specific areas, and revitalize some of the older neighborhood-serving commercial land uses that support citywide community goals outlined in the Milpitas 2040 General Plan, specifically Goal LU-1: Accommodate a well-balanced mix of land uses that meet the diverse needs of Milpitas residents, businesses, and visitors with places to live, work, shop, be entertained and culturally enriched, and Goal LU-6: Support commercial centers that serve residential neighborhoods and provide for a variety of convenient, successful and attractive commercial uses throughout the city.

Zoning Map and Text Amendments (Milpitas Municipal Code Section XI-10-57.02(G)(3) (a), (b))

1. *The proposed amendment is consistent with the General Plan.*

   The proposed text amendments are consistent with General Plan Policy LU 6-6, which states to encourage redevelopment and intensification of mixed-use areas by allowing standalone vertical mixed-use, or integrated horizontal mixed-use projects in mixed use areas, consistent with the Land Use Map and policies and actions included in this element. The proposed zoning adopts a place-based and flexible approach by establishing three distinct NCMU zones (NCMU1, NCMU2, and NCMU3) and three TC zones (TC1, TC2, and TC3). These zones consider factors such as parcel size, location, current use, and future potential. Each zone permits increased residential density and a reduced minimum non-residential FAR, promoting versatility in development. The Housing Element supports this change with Policy HE 3.7: support the adaptive reuse, renovation, conversion, or redevelopment of economically underutilized properties or buildings for residential or mixed-use development. This is further supported by the General Plan’s proposed text updates associated with this Project to ensure consistency between the Zoning Text and the General Plan. The Project is specifically consistent with General Plan Policy LU 6-5, which states to promote reinvestment in strip commercial and shopping centers and maintain, revitalize, and redevelop aging and underperforming centers. The proposed map amendments are consistent with the text amendments and the General Plan because the proposed map changes to the identified parcels, zoned TC and NCMU, are also implementing the existing General Plan land use designations. Furthermore, the proposed amendments introduce specific development standards related to permitted uses, parking, and open space, which are intended to implement the General Plan vision for the NCMU and TWC designations.

2. *The proposed amendment will not adversely affect the public health, safety and welfare.*

   The proposed text and map amendment are found to have no adverse effects on the public health, safety, and welfare. The amendments are designed to enhance the efficiency and effectiveness of the City's zoning regulations, ensuring they remain current and responsive to changing community needs. The amendments have been carefully reviewed and analyzed to assess their potential impacts on

public health, safety, and welfare. This analysis has been done through a place-based approach sensitive to the needs and circumstances of the areas that will be rezoned. These areas have been selected as being capable of supporting this development, and development standards have been selected that are specific to this area and its circumstances. As confirmed by the Addendum to the Milpitas General Plan Update Final EIR and the Supplemental Letter to the Addendum, traffic, environmental impacts, access to essential services, and community well-being will not be impacted in a manner that would significantly affect public health, safety, and welfare. Also, the City retains authority through discretionary approvals to address project-specific health, safety, and welfare concerns.

Planning Commission Action

On April 24, 2024, the Planning Commission held a public hearing on the HODs. The Planning Commission (5-0) recommended that the City Council approve the Project. Following the Planning Commission hearing, staff held three additional community meetings to further discuss the Project and address community concerns. Staff revised the project in its current form and presented the project to the Planning Commission at its regular meeting on February 26, 2025. The Planning Commission voted (4-0-2) to recommend that the Milpitas City Council approve the proposed General Plan Map and Text Amendment and Zoning Text and Map Amendments. Planning Commission Resolution No. 25-004 is included as Attachment D. A member of the public requested that the City modify certain language regarding building height, commercial FAR language, and allowable uses; however, this change was not included in the Planning Commission's recommendation. Staff met with the community member to further discuss their concerns.

POLICY ALTERNATIVE(S):

Alternative 1: Do not adopt the Housing Opportunity Districts Project.

Pros: None.
Cons: The City would not be in compliance with its adopted General Plan and Housing Element.

Reasons not recommended: The Housing Opportunity Districts Project is a program from the City's Housing Element. This program helps the City implement its the City's General Plan. There are specific goals and policies within the General Plan that help guide every project that comes before the Planning Commission and City Council. If the City does not implement the program as prescribed within the Housing Element, the State's Housing and Community Development Department (HCD) could decertify the City's Housing Element. If the City does not have a certified Housing Element, the City would be subject to Builder's Remedy projects within these areas. With Builder's Remedy projects, a jurisdiction cannot deny any project that meets the minimum affordable housing requirement if a jurisdiction does not have a certified or compliant Housing Element. Moreover, a consequence of non-compliance would result in automatic approvals of housing projects that meet the General Plan land use designations, and the City would not have any local control on proposed developments. Non-compliance could also result in fines and lawsuits from the State or other housing advocacy groups. In addition, the Housing Opportunity Districts Project is grant-funded; failure to adopt the Project would leave the City without the final reimbursement of funds from the State. Lastly, the City would lose access to future funding and grants.

FISCAL IMPACT:

The City retained Seifel Consulting to perform a fiscal analysis regarding proposed land use changes that would allow additional residential development to occur within the TC and NCMU zones. This analysis investigates the contribution of NCMU and TC areas to the overall sales tax revenues in the City, assessing the potential impact of the zoning updates on the City's sales tax revenue. Additionally, the study analyzes a prototypical redeveloped site within the NCMU, evaluating the cost-to-revenue ratio in various NCMU scenarios to provide insights into the financial implications of such redevelopment.

The potential fiscal impact was analyzed by evaluating alternative development scenarios for a typical property in the NCMU zone because several properties within this area are currently underutilized and have vacant commercial space. The fiscal analysis evaluated what could occur if a typical property were to be redeveloped to include housing.

The key findings of the analysis are below:

- If no zoning changes are made, no redevelopment is likely as the current General Plan commercial to residential ratios are infeasible.
- Even with the implementation of a place-based strategy, which maintains a robust minimum commercial floor area requirement for much of the HODs, only small portions of the HODs are likely to redevelop in the near future.
- Projected total General Fund revenues from new development is anticipated to exceed the total fiscal costs of providing services to future residents and employees for each of the development scenarios. This analysis indicates that new infill mixed-use and residential development is likely to have a positive fiscal impact on the City of Milpitas.

Figure 3: Potential Fiscal Impact from Typical HOD Development opportunity in FY 2022/23 Constant Dollars

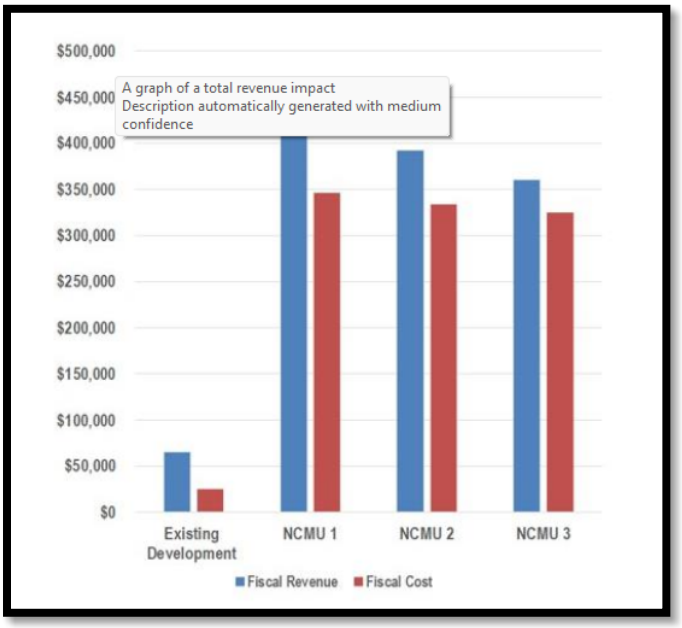

CALIFORNIA ENVIRONMENTAL QUALITY ACT (CEQA):

The Milpitas City Council certified an Environmental Impact Report (SCH #2020070348) for the General Plan Update in 2021. The EIR addressed the potential environmental effects of the planned buildout of Milpitas through the year 2040, and concluded that implementation of the General Plan would result in various levels of environmental impacts. Mitigation measures were incorporated into the EIR to reduce potential impacts from development under the General Plan.

An Addendum to the Milpitas General Plan Update Final EIR (FEIR) (March 2021, SCH #2020070348) has been prepared pursuant to CEQA Guidelines Sections 15162 and 15164, to evaluate whether the Project's environmental impacts are covered by and within the scope of the Milpitas General Plan Update FEIR.

The Addendum Evaluation details any changes in the Project, changes in circumstances under which the Project is undertaken, and/or "new information of substantial importance" that may cause one or more effects to environmental resources.

The attached Addendum substantiates and supports the City's determination that the HOD changes are within the scope of the General Plan Update FEIR, do not require subsequent action under CEQA Guidelines Section 15162, and adequately analyze potential environmental impacts in conjunction with the FEIR.

Further, although the Project has been revised from the initial Addendum, dated April 2024, Rincon Consultants, Inc. prepared a Supplemental Letter (Attachment D) and found that the proposed zoning changes and the latest revisions would result in a reduced buildout compared to the Addendum analysis. This reduction

in residential units and the consistency in non-residential space reduction, specifically commercial FAR minimums and maximums, ensure that the impacts would be less significant, as previously analyzed, and similar to or reduced compared to the Addendum conclusions. Additionally, the proposed changes are consistent with the overall land use and growth projections assumed within the General Plan EIR, which has already accounted for and mitigated potential environmental impacts. Since the environmental conditions have not changed since the April 2024 Addendum, the baseline conditions for analyzing impacts remain the same. Consequently, the reduced buildout further supports the conclusion that the impacts would be less significant, and the conclusions of the Addendum remain valid.

RECOMMENDATION:

1) Conduct a public hearing and determine that the EIR Addendum and Supplemental Letter to the Addendum adequately analyze the potential environmental impacts associated with the proposed General Plan and Zoning Amendments and are in compliance pursuant to CEQA Guidelines §15162 and §15164.
2) Adopt a resolution approving General Plan Text and Map Amendment No. GP24-0001 to update the Town Center (TWC) and Neighborhood Commercial Mixed-Use (NCMU) descriptions and amend the land use designation of certain parcels.
3) Move to waive the first reading beyond the title and Introduce Ordinance No. 38.857 approving Zoning Text and Zoning Map Amendment No. ZA24-0001 to establish the Neighborhood Commercial Mixed-Use (NCMU-1,2,3) district and subdistricts, and update the existing Town Center (TC districts to establish the subdistricts (TC-1,2,3).

ATTACHMENT(S):

(a) Resolution
(b) Ordinance
(c) Planning Commission Staff Report
(d) Planning Commission Resolution
(e) Planning Commission Meeting Minutes
(f) Housing Opportunity District Memorandum
(g) CEQA Addendum to the Milpitas General Plan Update
(h) CEQA Supplemental Letter to the EIR Addendum,
(i) Redline track changes to Sec. 6 Mixed Use Zones and Standards TC NCMU and GP Designation

RESOLUTION NO. _____

A RESOLUTION OF THE CITY COUNCIL OF THE CITY OF MILPITAS APPROVING GENERAL PLAN MAP AND TEXT AMENDMENT NO. GP24-0001 TO CHANGE THE DESCRIPTION OF THE TOWN CENTER (TWC) AND NEIGHBORHOOD COMMERCIAL MIXED-USE (NCMU) DESCRIPTIONS AND LAND USE POLICY (LU 6-1) AND AMEND THE LAND USE DESIGNATIONS OF CERTAIN PARCELS IN THE MILPITAS GENERAL PLAN 2040

WHEREAS, the City of Milpitas, California (the "City") is a municipal corporation, duly organized under the constitution and laws of the State of California; and

WHEREAS, California Government Code Section 65800 et seq. authorizes the adoption and administration of zoning laws, ordinances, rules, and regulations by cities as a means of implementing the General Plan; and

WHEREAS, the City Council is the final authority on General Plan, Specific Plan, and Zoning amendments, including amendments to the Zoning Map; and

WHEREAS, pursuant to the California Environmental Quality Act (Public Resources Code, § 21000 et seq.), the State CEQA Guidelines (California Code of Regulations, title 14, § 15000 et seq.) (collectively, "CEQA"), the City of Milpitas is the lead agency for the proposed project described below; and

WHEREAS, on February 26, 2025, the Planning Commission held a duly noticed public hearing, during which meeting the Planning Commission by adoption of Resolution No. 25-004, recommended that the City Council: 1) approve General Plan Map and Text Amendment No. GP24-0001 to change the description of the Town Center (TWC) and Neighborhood Commercial Mixed-Use (NCMU) descriptions and change the land use designation of certain parcels; 2) approve a Zoning Map and Text Amendment No. ZA24-0001 to establish the Neighborhood Commercial Mixed-Use (NCMU-1,2,3) districts and subdistricts, and update the existing Town Center (TC) districts to establish the subdistricts (TC-1,2,3); and 3) adopt the Housing Opportunity District Addendum to the Milpitas General Plan 2040 FEIR (SCH #2020070348) and Supplemental Letter to the Addendum; and

WHEREAS, the documents and other materials which constitute the record of proceedings upon which the City Council bases the recommendation and the findings contained within this Resolution are available and may be reviewed at Milpitas City Hall, located at 455 E. Calaveras Boulevard, Milpitas, California 95035; and

WHEREAS, on April 15, 2025, the City Council held a duly-noticed public hearing on the General Plan Land Use Map and Text Amendments, Zoning Map and Text Amendments, and Addendum to Milpitas General Plan 2040, related to the Housing Opportunity Districts (HODs), considered all written and oral reports of staff and public testimony on the matter, and such other matters as are reflected in the record of this matter; and

WHEREAS, these amendments represents a comprehensive approach to addressing housing challenges while promoting sustainable and vibrant mixed-use neighborhoods in Milpitas. The Project is a pivotal strategy in addressing Milpitas' housing needs while revitalizing our commercial centers. The Project aligns with the City's General Plan and Housing Element, emphasizing the importance of balanced land uses that meet the needs of our residents and businesses; and

WHEREAS, the findings and conclusions made by the City Council pursuant to this Resolution are based upon the oral and written evidence before it as a whole; and

WHEREAS, all other legal prerequisites to the adoption of this Resolution have occurred.

NOW, THEREFORE, the City Council of the City of Milpitas hereby finds, determines, and resolves as follows:

SECTION 1. RECITALS

The City Council has considered the full record before it, which includes, but is not limited to, such things as all published staff reports, oral and written testimony by staff, the Planning Commission, City Council and the public, and all other relevant materials and evidence submitted or provided to it. Furthermore, the recitals set forth above are found to be true and correct and incorporated herein by reference.

SECTION 2. GENERAL PLAN LAND USE MAP AND TEXT AMENDMENT FINDINGS (SECTION XI-10-57.02)

The City Council approves and adopts the analysis, recommendations, and findings set forth in the final Housing Opportunity Districts (HODs) memorandum, as if fully set forth herein. The City Council makes the following further findings based on the evidence in the administrative record in support of General Plan Text Amendment No. GP24-0001:

a. *The proposed amendment is internally consistent with those portions of the General Plan which are not being amended.*

The proposed General Plan Map and Text Amendments are found to be internally consistent with those portions of the General Plan which are not being amended. The amendments do not introduce any conflicts or inconsistencies with the existing goals, policies, or programs of the General Plan. Instead, they build upon the existing framework of the General Plan, enhancing its effectiveness and relevance to current and future planning efforts. The General Plan envisioned opportunities in the NCMU for redevelopment of aging commercial centers by allowing multifamily dwelling units. The proposed changes facilitate this overall objective for the Project area consistent with planning objectives throughout the City and in a manner that is consistent and flexible with redevelopment needs. The General Plan similarly envisioned opportunities in the TWC for mixed-use and residential only projects that increase economic support for the commercial uses. These changes further the redevelopment of major shopping centers in these areas in a manner that supports economic growth. These changes also further the larger objectives of the General Plan for supporting the community's housing needs and guiding that development towards areas that can support this growth. The proposed changes are carefully integrated into the existing General Plan, ensuring that they align with its overall vision and objectives.

Pursuant to California Government Code Section 65863:

The Project scope includes a General Plan Map Amendment to remove the NCMU land use designation and to revert the land use designation back to General Commercial (GNC) on certain parcels. Although this would remove the allowance of housing on certain parcels, the proposed overall density in both TWC and NCMU General Plan land use designations have been greatly increased. Further, the Project site or a portion thereof was not identified in the

Housing Element to accommodate a portion of the regional housing need. The 2021 General Plan update established the new NCMU land use designation, but the Zoning Ordinance had not yet been updated to reflect this change. For the Housing Element Sites Inventory, only vacant parcels or parcels with developer interest with the NCMU land use designation were considered with an assumed maximum density of 30 dwelling units per acre. Additionally, Program 15 of the Housing Element sets a goal to foster the development of at least 200 affordable housing units in the housing opportunity zones (districts) (TC and NCMU). Based on the City's Affordable Housing Ordinance (AHO), which requires 15 percent of total units to be affordable within a new development project, the Program 15's goal of 200 affordable units, and HCD's requirement to plan for at least a 30 percent buffer in planning for residential units, the minimum number of residential units needed to comply with the Housing Element is 1,733 units. Moreover, the Project would result in approximately 2,156 new residential housing units compared to existing conditions across both districts, which greatly exceeds the minimum number required for Housing Element compliance. Any reduction in residential density, as defined in Government Code Section 65863(g), is consistent with the General Plan, together with the Housing Element, because the Project continues to remove potential barriers to redevelopment of housing projects while preserving necessary commercial opportunities that will support that development and fulfill the planned vision of these zones. The Project's residential density is consistent with the Housing Element, and the remaining sites identified in the Housing Element remain unchanged and are adequate to meet the requirements of Government Code Section 65583.2 and to accommodate the City's share of the regional housing need pursuant to Section 65584. This finding demonstrates that the Project is not subject to Government Code Section 65583.2 and will still ensure that the City can accommodate the remaining share of the regional housing need pursuant to Section 65584.

b. The proposed amendment will not adversely affect the public health, safety, and welfare.

The proposed General Plan Map and Text Amendment are found to be consistent with the overall planning objectives and goals of the City of Milpitas. The map amendments affect a small number of parcels. The amendment is necessary to accommodate changing community needs and to promote sustainable growth within the city. The amendment aligns with the City's vision for responsible land use planning, economic development, and environmental stewardship. Additionally, the amendment is in compliance with applicable state and local laws, including the California Environmental Quality Act (CEQA). The proposed changes are supported by relevant data and analysis, demonstrating that they will not result in adverse impacts on the environment or public health, safety, or welfare. These changes increase housing and affordable housing stock to meet growing regional needs and expand the opportunity and flexibility of mixed-use development in areas identified by the City of being capable of sustaining additional and denser residential development. Also, the City retains authority through discretionary approvals to address project-specific health, safety, and welfare concerns. This amendment enables the City to modify its current Mixed Use Designations to prioritize the preservation of existing neighborhoods, channeling new housing growth to specific areas, and revitalize some of the older neighborhood-serving commercial land uses that support citywide community goals outlined in the Milpitas 2040 General Plan, specifically Goal LU-1: Accommodate a well-balanced mix of land uses that meet the diverse needs of Milpitas residents, businesses, and visitors with places to live, work, shop, be entertained and culturally enriched, and Goal LU-6: Support commercial centers that serve residential neighborhoods and provide for a variety of convenient, successful and attractive commercial uses throughout the city.

SECTION 3. AMENDMENT OF MILPITAS GENERAL PLAN 2040 MIXED USE DESIGNATIONS TEXT

The Description of the Town Center (TWC) and Neighborhood Commercial Mixed-Use (NCMU) Descriptions on page LU-6 of the adopted Milpitas General Plan 2040 are hereby amended to read as follows:

TOWN CENTER (TWC) (UP TO 65 UNITS PER ACRE AND FAR UP TO 0.85)

The Town Center (TWC) designation provides for a variety of commercial, professional, civic, restaurants, hotels, residential, and entertainment uses. Projects may consist of a wholly non-residential development, or a mixed use residential project that integrates residential and nonresidential uses vertically or horizonal. Residential developments up to 65 units per acres are permitted within the Town Center to increase economic support to the commercial uses. To maintain the importance of the Town Center area as a center for commercial, professional and civic uses, a minimum of 0.35 FAR of non-residential uses is required for redevelopment of major shopping centers into mixed-use projects and a minimum of 0.10 FAR of non-residential ground floor uses is required along major streets. All non-residential development, except for hotel uses, must adhere to a FAR maximum of up to 0.85. Where permitted, residential only developments do not require any minimum non-residential FAR.

NEIGHBORHOOD COMMERCIAL MIXED-USE (NCMU) (FAR UP TO 0.50, AND UP TO 60 UNITS PER ACRE FOR MIXED-USE AND RESIDENTIAL ONLY PROJECTS)

The Neighborhood Commercial Mixed-Use (NCMU) designation is intended to accommodate a vertical and horizontal mix of commercial and residential uses with an emphasis on neighborhood commercial activity. Residential uses, hotel, and office development are allowed on upper floors. The NCMU designation encourages active neighborhood-serving uses at the ground level, including grocery stores, specialty retail, restaurants, plazas, or walk-in personal services such as banks and salons at FARs up to 0.50.

This designation provides opportunities for vertical and horizontal mixed-use residential development to provide for area vibrancy and to encourage the redevelopment of aging commercial centers by allowing residential developments up to 60 dwelling units per acre for mixed-use and residential only projects. Redevelopment of larger neighborhood commercial centers shall provide a minimum of 0.20 FAR of new or rehabilitated neighborhood-serving retail and commercial services. Parcels fronting major streets shall provide a minimum 0.10 FAR of neighborhood-serving retail and commercial services for the first 100 feet of parcel frontage depth. The residential only developments do not require any minimum non-residential FAR.

SECTION 4. AMENDMENT OF MILPITAS GENERAL PLAN 2040 MIXED USE DESIGNATIONS TEXT

Policy LU 6-1 on page LU-26 of the Milpitas General Plan 2040 is hereby amended to read as follows:

> LU 6-1 Ensure new development in Neighborhood Commercial Mixed Use (NCMU) areas includes adequate commercial components to retain commercial uses as the dominant ground floor use type, and that the redevelopment of aging centers results in maintaining viable commercial space to meet neighborhood's daily service needs.

SECTION 5. AMENDMENT OF MILPITAS GENERAL PLAN 2040 FIGURE LU-1: GENERAL PLAN LAND USE MAP

The General Plan Land Use Map (Figure LU-1) at page LU-11 of the adopted Milpitas 2040 General Plan is hereby amended only as to parcels and changes as shown in Exhibit A.

SECTION 6. CALIFORNIA ENVIRONMENTAL QUALITY ACT

The City prepared an Addendum to the Milpitas General Plan 2040 EIR (SCH#: 2020070348) (memorialized as an attachment to the Staff report, dated April 24, 2024) for the proposed Project in accordance with the California Environmental Quality Act (CEQA).

The Addendum Evaluation details any changes in the project, changes in circumstances under which the project is undertaken, and/or "new information of substantial importance" that may cause one or more effects to environmental resources.

The Addendum substantiates and supports the City's determination that the HOD changes are within the scope of the General Plan EIR, does not require subsequent action under CEQA Guidelines Section 15162, and adequately analyze potential environmental impacts in conjunction with the EIR.

Further, although the Project has been revised from the initial Addendum, dated April 2024, Rincon Consultants, Inc., on behalf of the City, prepared a Supplemental Letter (memorialized as an attachment to the staff report, dated January 28, 2025) and found that the proposed zoning changes and the latest revisions would result in a reduced buildout compared to the Addendum analysis. This reduction in residential units and the consistency in non-residential space reduction, specifically commercial FAR minimums and maximums, ensure that the impacts would be less significant, as previously analyzed, and similar to or reduced compared to the Addendum conclusions. Additionally, the proposed changes are consistent with the overall land use and growth projections assumed within the General Plan EIR, which has already accounted for and mitigated potential environmental impacts. Since the environmental conditions have not changed since the April 2024 Addendum, the baseline conditions for analyzing impacts remain the same. Consequently, the reduced buildout further supports the conclusion that the impacts would be less significant, and the conclusions of the Addendum remain valid.

The City Counicl has been provided the Addendum to the Milpitas General Plan 2040 EIR (SCH#: 2020070348) and the Supplemental Letter to the Addendum and findings to review and consider in making a recommendation to the City Council to adopt the Housing Opportunity Districts (HODs).

The City Council adopts this Addendum as if fully set forth herein and finds in light of the full record before it, including the Addendum, that its actions are consistent with CEQA and State CEQA guidelines.

SECTION 7. SEVERABILITY

If any section, subsection, sentence, clause, phrase, or portion of this Resolution is for any reason held incorrect, invalid, illegal, or unenforceable, such decision shall not affect the validity of the remaining portions of this Resolution. The City Council hereby declares that it would have passed each section, subsection, phrase, or clause thereof irrespective of the fact that any one or more sections, subsections, phrases or clauses be declared incorrect, invalid, illegal, or unenforceable.

SECTION 6. CITY COUNCIL APPROVAL

The City Council hereby approves General Plan Map and Text Amendment No. GP24-0001, based on the above findings.

PASSED AND ADOPTED this _____ day of _____, 2025, by the following vote:

AYES:

NOES:

ABSENT:

ABSTAIN:

ATTEST:

_____

Suzanne Guzzetta, City Clerk

APPROVED:

_____

Carmen Montano, Mayor

APPROVED AS TO FORM:

_____

Christopher Creech, Acting City Attorney

Attachments:

Exhibit A: General Plan Land Use Map Amendment

Exhibit A: General Plan Land Use Map Amendment

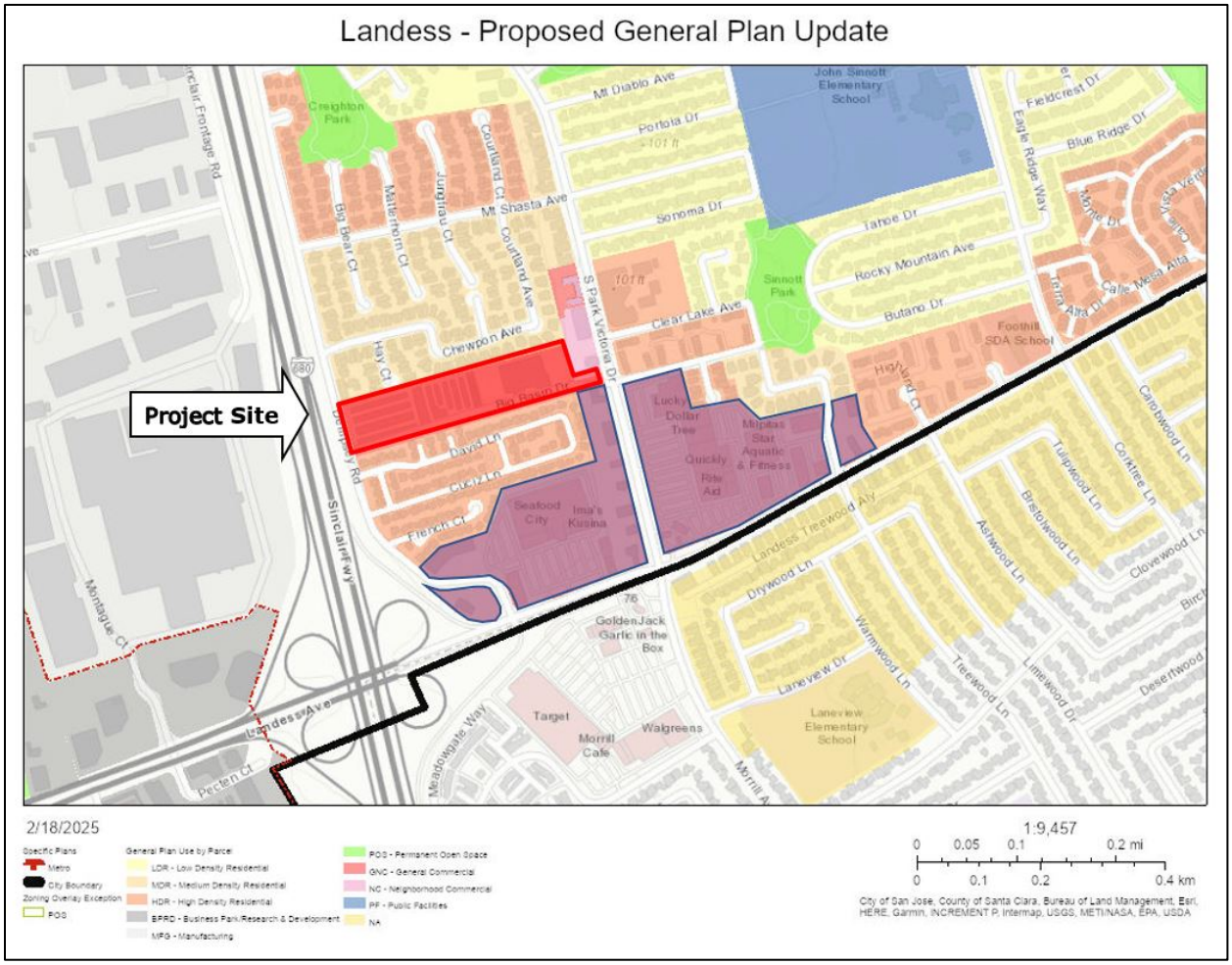

REGULAR

NUMBER: **XX.XXX**

TITLE: **AN ORDINANCE OF THE CITY COUNCIL OF THE CITY OF MILPITAS AMENDING CHAPTER 10, SECTION 6 OF TITLE XI OF THE MILPITAS MUNICIPAL CODE RELATING TO THE ESTABLISHMENT OF THE NEIGHBORHOOD COMMERCIAL MIXED-USE (NCMU) ZONING DISTRICT AND TOWN CENTER (TC) SUBDISTRICTS AND AMENDING THE ZONING MAP DESIGNATION OF CERTAIN PARCELS WITHIN THE ZONING MAP**

HISTORY: This Ordinance was introduced (first reading) by the City Council at its meeting of _____, upon motion by_____ and was adopted (second reading) by the City Council at its meeting of _____, upon motion by _____. The Ordinance was duly passed and ordered published in accordance with law by the following vote:

AYES:

NOES:

ABSENT:

ABSTAIN:

ATTEST:

_____
Suzanne Guzzetta, City Clerk

APPROVED:

_____
Carmen Montano, Mayor

APPROVED AS TO FORM:

_____
Christopher Creech, Acting City Attorney

RECITALS AND FINDINGS:

WHEREAS, the City of Milpitas, California (the "City") is a municipal corporation, duly organized under the constitution and laws of the State of California; and

WHEREAS, California Government Code Section 65800 et seq. authorizes the adoption and administration of zoning laws, ordinances, rules and regulations by cities as a means of implementing the General Plan; and

WHEREAS, Section 3.03 of Chapter 10 Zoning of Title XI of the Milpitas Municipal Code, divides the City into zoning districts; and

WHEREAS, the City Council is the final authority on General Plan, Specific Plan, and Zoning amendments, including amendments to the Zoning Map; and

WHEREAS, the City wishes to amend the Zoning map and Zoning text to establish the Neighborhood Commercial Mixed-Use (NCMU-1,2,3) districts and subdistricts, update the existing Town Center (TC) districts to establish the subdistricts (TC-1,2,3) within the Zoning Text and Zoning Map, which has been initiated by this Ordinance; and

WHEREAS, on February 26, 2025, the Planning Commission held a duly-noticed public hearing on the subject application, and considered evidence presented by City staff, the applicant, and other interested parties and recommended the City Council approve the proposed amendments; and

WHEREAS, per Milpitas Municipal Code § XI-10-57.02(G)(3), the City Council likewise finds that the Zoning Code Amendment set forth herein will not adversely affect the public health, safety and welfare, in that the Project will not adversely affect the public health, safety and welfare. Additionally, an Addendum to the Milpitas General Plan Update Final EIR (March 2021, SCH #2020070348) was prepared pursuant to CEQA Guidelines Sections 15162 and 15164, to evaluate whether the Project's environmental impacts are covered by and within the scope of the Milpitas General Plan FEIR. The Addendum Evaluation details any changes in the project, changes in circumstances under which the Project is undertaken, and/or "new information of substantial importance" that may cause one or more effects to environmental resources. The Addendum substantiates and supports the City's determination that the HOD changes are within the scope of the General Plan EIR, do not require subsequent action under CEQA Guidelines Section 15162, and adequately analyze potential environmental impacts in conjunction with the EIR; and

WHEREAS, a Supplemental Letter to the Addendum was prepared in response to the Project revisions and found that the proposed the proposed changes are consistent with the overall land use and growth projections assumed within the General Plan EIR, which already accounted for and mitigated potential environmental impacts; and

WHEREAS, since the environmental conditions have not changed since the April 2024 Addendum, the baseline conditions for analyzing impacts remain the same. Consequently, the reduced buildout further supports the conclusion that the impacts would be less significant, and the conclusions of the Addendum remain valid; and

WHEREAS, on April 15, 2025, the City Council held a duly-noticed public hearing on the proposed action, and considered evidence presented by City staff and other interested parties; and

WHEREAS, the City Council finds that with the approval (by separate resolution) of General Plan Map and Text Amendment No. GP24-0001, Zoning Text, and Map Amendment No. ZA24-0001 and, the Zoning Code and the General Plan will be internally consistent; and

WHEREAS, prior to taking action on this Ordinance, the City Council has taken separate action to adopt the Housing Opportunity District Addendum to the Milpitas General Plan 2040 EIR (SCH #2020070348) and the Supplement Letter to the Addendum and impose it as a condition of project approval; and

WHEREAS, these amendments represent a comprehensive approach to addressing housing challenges while promoting sustainable and vibrant mixed-use neighborhoods in Milpitas. The Project as a pivotal strategy in addressing Milpitas' housing needs while revitalizing our commercial centers. The project aligns with the City's General Plan and Housing Element overall, emphasizing the importance of balanced land uses that meet the needs of our residents and businesses.

NOW, THEREFORE, the City Council of the City of Milpitas does ordain as follows:

SECTION 1. RECORD AND BASIS FOR ACTION

The City Council has duly considered the full record before it, which may include but is not limited to such things as the City staff report, testimony by staff and the public, and other materials and evidence submitted or provided to the City Council. Furthermore, the recitals set forth above are found to be true and correct and are incorporated herein by reference.

SECTION 2. ZONING MAP AMENDMENT FINDINGS (XI-10-57.02)

The City Council makes the following findings based on the evidence in the public record in support of Zoning Amendment No. ZA24-0001:

a. *The proposed amendment is consistent with the General Plan.*

The proposed text amendments are consistent with General Plan Policy LU 6-6, which states to encourage redevelopment and intensification of mixed-use areas by allowing standalone vertical mixed-use, or integrated horizontal mixed-use projects in mixed use areas, consistent with the Land Use Map and policies and actions included in this element. The proposed zoning adopts a place-based and flexible approach by establishing three distinct NCMU zones (NCMU1, NCMU2, and NCMU3) and three TC zones (TC1, TC2, and TC3). These zones consider factors such as parcel size, location, current use, and future potential. Each zone permits increased residential density and a reduced minimum non-residential FAR, promoting versatility in development. The Housing Element supports this change with Policy HE 3.7: support the adaptive reuse, renovation, conversion, or redevelopment of economically underutilized properties or buildings for residential or mixed-use development. This is further supported by the General Plan's proposed text updates associated with this Project to ensure consistency between the Zoning Text and the General Plan. The Project is specifically consistent with General Plan Policy LU 6-5, which states to promote reinvestment in strip commercial and shopping centers and maintain, revitalize, and redevelop aging and underperforming centers. The proposed map amendments are consistent with the text amendments and the General Plan because the proposed map changes to the identified parcels, zoned Town Center (TC) and Neighborhood Commercial Mixed Use (NCMU), are also implementing the existing General Plan land use designations. Furthermore, the proposed amendments introduce specific development standards related to permitted uses, parking, and

open space, which are intended to implement the General Plan vision for the NCMU and TWC designations.

b. The proposed amendment will not adversely affect the public health, safety and welfare.

The proposed text and map amendment are found to have no adverse effects on the public health, safety, and welfare. The amendments are designed to enhance the efficiency and effectiveness of the City's zoning regulations, ensuring that they remain current and responsive to changing community needs. The amendments have been carefully reviewed and analyzed to assess their potential impacts on public health, safety, and welfare. This analysis has been done through a place-based approach sensitive to the needs and circumstances of the areas that will be rezoned. These areas have been selected as being capable of supporting this development, and development standards have been selected that are specific to this area and its circumstances. As confirmed by the Addendum to the Milpitas General Plan Update Final EIR and the Supplemental Letter to the Addendum, traffic, environmental impacts, access to essential services, and community well-being will not be impacted in a manner that would significantly affect public health, safety, and welfare. Also, the City retains authority through discretionary approvals to address project-specific health, safety, and welfare concerns.

SECTION 3. AMENDMENT OF MILPITAS MUNICIPAL CODE TITLE XI, CHAPTER 10, SECTION 6.0

Title XI, Chapter 10, Section 6 Mixed Use Zones and Standards is hereby amended to read as follows:

Section 6 Mixed Use Zones and Standards

XI-10-6.01 Purpose and Intent

A. Mixed Use ("MXD") Zoning District. The purpose of the MXD zoning district is to encourage a compatible mix of residential, retail, entertainment, office and commercial service uses within the framework of a pedestrian-oriented streetscape. It is intended that the residential and commercial use allowed in the "MXD" District combine to provide for an "around-the-clock-environment" with urban open areas (i.e. plazas, squares) that serve multiple purposes and can be used for special events.

B. High Density Mixed Use ("MXD2") Zoning District. The purpose of the MXD2 zoning district is to encourage a mix of retail, restaurant, entertainment, and commercial service uses on the ground floor with residential or office uses on the floors above while maintaining a pedestrian-oriented streetscape. It is intended that the retail or restaurant space required will ensure neighborhood-oriented retail and services are provided within walking distance of high density residential development.

C. Very High Density Mixed Use ("MXD3") Zoning District. The purpose of the MXD3 zoning district is to provide very-high density housing, retail and employment uses.

D. Neighborhood Commercial Mixed Use (“NCMU”) Zoning District. The purpose of the NCMU zoning district is to encourage a compatible mix of residential, retail, entertainment, office, and commercial uses. It is intended that the neighborhood-serving active uses such as grocery stores, retail, restaurants, and personal services at key locations on the ground level will help create a pedestrian oriented streetscape and public spaces. The NCMU Zoning District is subdivided into three subdistricts:

1. NCMU1 allows commercial or mixed-use development the primary function as a commercial center to provide goods and services to the immediate neighborhood. The mix of uses may be vertical or horizontal.

2. NCMU2 allows commercial or mixed-use development with some active commercial storefronts along the street frontages.

3. NCMU3 allows commercial, mixed use, or residential only development with no minimum commercial FAR. NCMU3 includes parcels that are less suitable for commercial use, such as those located on secondary streets, lacking street frontages, or adjacent to residential zones.

E. Town Center (TC) Zone. The purpose and intent of this zone is to provide for an area that supports a wide range of administrative, business, entertainment, dining, and cultural activities along with some residential uses in the geographic center of the City to suit the varying lifestyles of residents and visitors alike. The area is easily accessible via the City's transportation network. The TC Zoning District is subdivided into three subdistricts:

1. TC1 allows commercial or mixed-use development with the primary function as a commercial center to provide goods and services to the immediate neighborhood and larger community. The mix of uses may be vertical or horizontal.

2. TC2 allows commercial or mixed-use development with active commercial storefronts along the street frontages.

3. TC3 allows commercial, mixed-use or residential only development with no minimum commercial FAR. TC 3 includes parcels that are less suitable for retail uses, such as those located on secondary streets, lacking street frontages, or adjacent to residential zones.

XI-10-6.02 Mixed Use Regulations

A. Permitted and Conditionally Permitted Uses.

1. Primary uses. The uses identified in Table 6.02-1, Mixed Use Zone Uses, shall be the primary uses allowed to occur on a property. All uses except for those noted shall be conducted within enclosed structures. The primary uses identified in Table 6.02-1 shall be permitted or conditionally permitted, as indicated:

P	Where the symbol "P" appears, the use shall be permitted.
MCS	Where the symbol "MCS" appears, the use shall be permitted subject to the issuance of a Minor Conditional Use Permit by staff, in accordance with Section 57.04, Conditional Use Permits and Minor Conditional Use Permits, of this chapter.
P/C	Where the symbol "P/C" appears the use may be permitted if certain criteria is met or otherwise a Conditional Use Permit shall be required, in accordance with Section XI-10-57.04, Conditional Use Permits, of this Chapter.
C	Where the symbol "C" appears, the use shall be permitted subject to the issuance of a Conditional Use Permit, in accordance with Section 57.04, Conditional Use Permits and Minor Conditional Use Permits, of this chapter.
MC	Where the symbol "MC" appears, the use shall be permitted subject to the issuance of a Minor Conditional Use Permit, in accordance with Section 57.04, Conditional Use Permits and Minor Conditional Use Permits, of this chapter.
O	Where the symbol "O" appears, the use is subject to an alternative review process described in a subsequent footnote.

2. Accessory Uses.

a. Massage Services. Massage services may be allowed as an accessory use to any permitted or conditionally permitted medical office, medical clinic, chiropractor practice, acupuncture practice, physical therapist, fitness and athletic facility, health care facility (such as hospitals, nursing homes and sanitariums), and accredited school, college, and university. Massage services, limited to massage of the head, neck, shoulders, hands and feet may be allowed as an accessory use to any permitted or conditionally permitted beauty salon, barbershop, and healing art practices. This section shall not exempt any person or business from complying with all the provisions of Title III, Chapter 6.

B. Prohibited Uses. The following uses are prohibited:

1. Uses where the symbol "NP" appears within Table 6.02-1.

2. The following uses are not permitted in any mixed use zone:

a. Adult Businesses as defined in Subsection 13.04, Adult Businesses, of this Chapter.

b. Disinfecting and extermination business.

c. Ground level residential in the Ground Level Commercial Area as shown on the Midtown Specific Plan Land Use Map, Figure 3.1 and Zoning Map.

d. Outdoor storage of vehicles.

e. Private self-storage facilities

f. Single family detached dwellings

g. Two family dwelling units

C. Other Uses. Any other uses may be considered by the Planning Commission that are similar in accordance with the procedure, prescribed in Subsection 10-54.02, Other Uses Permitted by Commission, of this Chapter.

Table XI-10-6.02-1
Mixed Use Zone Uses

Use	MXD	MXD2		MXD3	NCMU1,2,3	TC1,2,3
		Ground Level (Facing Retail street)	Upper Floor			
1. Commercial Uses						
Alcohol beverage sales	C	C	C	C	C	C
Business support services[1]	P/NP[2]	P/NP[2]	NP	P/NP[2]	P/NP[2]	MC
Grocery stores (supermarkets)[3]	C	C	C	C	P	P
Pawnshops[4]	C	C	C	C	NP	NP
Personal services[1, 5]	P	P	P	P	P	P
Pet shops	C	NP	NP	NP	NP	P
Repair and cleaning shop, small items[1]	P	P	P	MC	MC	P

Retail stores, general merchandise[6]	P	P	MCS	MCS	P	P
Thrift shops (used merchandise)						
Retail	P	P	P	P	P	P
With collections	C	C	C	C	C	NP
Drive Through Uses	NP	NP	NP	NP	NP	C
2. Entertainment and Recreation						
Commercial athletic facilities	P	P	P	P	MCS in NCMU1	P
"Theaters (Indoor)"						
Recreation or entertainment facility	C	C	C	C	NP	C
3. Health and Veterinarian Uses						
Animal grooming (no boarding)	P	P	NP	P	NP	P
Hospitals or sanitariums[7]	C	C	C	C	NP	C
Massage establishment [8]	MC	MC	MC	MC	MC	MC
Massage establishment, accessory [8]	MCS	MCS	MCS	MCS	MCS	MCS
Medical or dental offices and clinics	P	NP	P	P	P (upper floors) MCS (ground floor)	P
Medical support laboratories	P	P	P	P	NP	C
Optician and optometrist shop	P	P	P	P	P (upper floors) MCS (ground floor)	P
Pharmacy or drug store	P	P	P	P	P	P
Veterinarian clinic	P	P	P	P	NP	P
4. Lodging						
Bed and breakfast	P	P	NP	NP	NP	NP
Boarding houses (3 or more persons)	C	C	C	C	C	C
Group dwellings	C	C	C	C	C	C
Hotels	C	P	P	P	C	P
Motels	C	C	C	C	NP	NP
5. Professional Offices, Financial Institutions and Related Uses						
Financial institutions (banks, savings and loans, etc.)	MCS	NP	MCS	P	P	P
Offices, business and professional[6]	MCS	NP	MCS	P	C	P
6. Public/Quasi Public and Assembly Uses						
Child care						
Child care center	C	P	C	P	C	C
Day care school	C	C	C	C	C	C
Large family child care home	P	P	C	P	P	P

Small family child care home	P	P	P	P	P	P
Instruction						
Group[6]	P	NP	NP	NP	P	P
Private	P	P	P	P	P	P
Park, playground or community center[10]	O	O	O	O	O	O
Places of assembly[7]	C	C	C	C	C	C
Public utilities	C	C	C	C	C	C
Schools, private (elementary, middle and high)[5]	C	C	C	C	C	C
Theaters (Indoor)	C	C	C	C	NP	C
Trade and vocational schools[7]	C	C	C	C	NP	C
Transportation facilities[4]	C	C	C	C	NP	C
7. Residential Uses						
Multi-family housing[11]	P	NP[12]	P	P	P[12]	P
Transitional and supportive housing[11]	P	NP[12]	P	P	P[12]	P
Accessory Dwelling Unit[14]	P	NP	P	P	P	P
8. Restaurants or Food Service						
Bar or nightclub	C[15]	C[15]	C	C[15]	C[15]	C
Brewery/Eateries	MCS	MCS	NP	MCS	MCS	MCS
Catering establishments	C	C	C	C	NP	P
Restaurants[4]	P/C	P/C	NP	P/C	P/C	P
With music (indoor/outdoor)	P[15]	P[15]	NP	P[15]	P[15]	P
With other live entertainment/dancing	C	C	NP	C	C	C
Mobile Food Vending (individual vehicle)[16]	P	P	NP	P	P	P
Mobile Food Park[16]	MC	NP	NP	MC	NP	MC
Commissary	MC	NP	NP	MC	NP	MC
9. Unclassified Uses						
Artisan Studios & Live-work units, woodworking or glassworking, plumbing or metalworking and sign shops[4]	MCS	MCS	MCS	MCS	MCS	MCS
Lobbies and entries for upper floor uses	P	P	NP	P	P	P
Model home complex[17]	P	P	P	P	P	P
Mixed use developments[18]	P	P	P	P	P	P
Planned Unit Development[19]	P	P	P	P	P	P
Temporary seasonal sales[20]	P	P	P	P	P	P
Short-Term Rentals[21]	P	NP	P	P	P	P
10. Vehicle-Related Repair, Sales and Services						
Auto sales and rental[22]	C	C	C	C	NP	NP
Auto broker (wholesale, no vehicles on site)[4]	MCS	MCS	MCS	MCS	NP	MCS
Vehicle service uses[23]	C	NP	NP	C	NP	C

[1] Refer to Subsection XI-10-6.02-1(B), Performance standards for certain uses, of this Chapter, for standards.

[2] Copy/quick-printing shops and mailbox rental facilities shall be permitted in all MXD, MXD2 (Ground Floor), MXD3, and all NCMU zones. All other uses classified as Business Support Services shall not be permitted in these zones.

[3] Grocery stores with floor area up to 15,000 square feet are permitted. Grocery stores exceeding 15,000 square feet may be permitted subject to the approval of a Conditional Use Permit pursuant to Subsection XI-10-57.04 of this Chapter.

[4] Refer to Subsection XI-10-6.02-1, Special Uses, of this Chapter, for standards.

[5]When located on the ground floor, retail sales of products related to the Personal Services provided shall be offered at the front of the premises near the pedestrian entrance and shall comprise at least 10 percent of the floor area of the business establishment.

[6] Refer to Subsection XI-10-6.02-1(B) Performance standards for certain uses, of this Chapter.

[7] Refer to Subsection XI-10-6.02-2, Quasi-Public Uses, of this Chapter, for standards.

[8]Massage establishments are subject to Title III, Chapter 6 of the Milpitas Municipal Code and Subsection XI-10-13.16 of this title. Refer to Subsection XI-10-13.16, of this Title, for special provisions for massage establishments.

[9] Reserved

[10] For parks, playgrounds or community center owned and operated by a government agency or a nonprofit community organization.

[11] Ground level residential is prohibited in the Ground Level Commercial Area as shown on the Midtown Specific Plan Land Use Map, Figure 3.1.

[12] Uses serving upper-floor residential uses, such as common gathering space, lobby, and resident services, may be allowed as ground floor uses where residential uses would otherwise not be permitted.

[14]Only allowed within multi-family dwellings, subject to the requirements of Subsection XI-10-13.08, Accessory Dwelling Units, of this Chapter.

[15] Indoor or outdoor music is permitted as an accessory use on the same parcel in conjunction with a restaurant or bar that is a principal permitted use or approved conditional use in the MXD, MXD2, MXD3, and NCMU zones. See also Subsection XI-10-6.06(B) for additional regulations.

[16]Refer to Subsection XI-10-13.18, Mobile Food Vending, of this Chapter.

[17]Refer to Subsection XI-10-13.11(E), Model Home Complexes and Sales Offices, of this Chapter for temporary tract offices.

[18]Which include only permitted uses.

[19]Refer to Section XI-10-54.07, Planned Unit Developments, of this Chapter, for standards.

[20]Refer to Section XI-10-13.11(D), Temporary Seasonal Sales, of this Chapter.

[21]Only allowed within a dwelling unit, subject to the requirements of Subsection XI-10-13.17, Short-Term Rentals, of this Chapter.

[22]New and used auto, recreational vehicle and boat sales, excluding commercial vehicles, trucks, buses, vans, and farm equipment, with accessory repairs and services, only allowed if fully enclosed within a building. Bicycle and auto rental agency, excluding commercial vehicles, trucks, buses, vans, boats and RV rentals, only if fully enclosed within a building.

[23]Refer to Subsection XI-10-6.02-2, Special Uses, of this Chapter, for standards. Service stations shall follow the "General development policy: Gasoline service stations, and automotive service centers" adopted by the City Council on December 19, 1995.

6.02-1 Mixed Use Zone Special Uses

A. Special Uses within all MXD zones. Certain uses noted in Table 6.02-1, Mixed Use Zone Uses may be allowed through the approval of a Conditional Use Permit and Minor Conditional Use Permits, in accordance with Subsection 57.04, Conditional Use Permits, of this Chapter, if they are not located within one thousand (1,000) feet of another same use listed below. This distance shall be measured from the property line of the parcel where such use is located.

   1. Auto service uses, including but not limited to: gasoline service stations, car washes, tire shops, towing without vehicle storage and auto repair shops of all kinds, radiators, paint, body, glass, brakes, upholstery, and other similar types.

   2. Local transportation service facilities (e.g. taxi, parcel service, ambulance, armored car, and van storage) without outdoor storage of vehicles.

   3. Pawnshops.

B. Performance Standards for Certain Uses. For uses requiring approval of a Minor Conditional Use Permit by staff, in accordance with Section XI-10-57.04, Conditional Use Permits and Minor Conditional Use Permits, of this Chapter, the following performance standards below shall be met.

   1. Auto Brokers. Auto Brokers may be permitted by right if the following standards are met:

      a. Local Sales and Use Tax. In order to assist the City of Milpitas in its efforts to receive direct distribution of the local tax on materials associated with the project, the California Sales and Use Tax (the "Local Tax") shall be allocated to the project site, to the extent reasonably possible. Evidence of tax allocation or cause as to why such allocation cannot be made shall be submitted at the time of business license submittal.

   2. Auto Service Uses. Auto Service uses shall comply with the following standards:

      a. All operations shall be conducted completely within an enclosed building.

      b. Entrances to the service bays shall not be open to the street but shall be designed to face the rear or interior side property line.

   3. Artisans, Plumbing, Metalworking, Sign Shops and Woodworking or glass working shops. These uses shall comply with the following standards:

      a. All operations shall be conducted completely within an enclosed building.

      b. There shall be no dust, fume, or odor either emitted from the premise.

      c. The operations shall not create excessive vibrations.

      d. The operations shall be consistent with the City's noise standards.

e. Plumbing, metalworking, sign shops, woodworking or glass working shops shall not be closer than 1,000 feet of another same use measured from the property line.

4. Personal Services, Business Support Services, and Repair and Cleaning-Small Items uses shall comply with the following:

   a. When located within the MXD zone:

      i. Located in the area designated for ground floor retail and are less than or equal to ten thousand (10,000) square feet in gross floor area;

      ii. Located in the areas not designated for ground floor retail and are less than or equal to fifty thousand (50,000) square feet in gross floor area.

   b. When located within the MXD2 and MXD3 zones they are less than or equal to fifty thousand (50,000) square feet in gross floor area;

   c. They are not open past 10:00 p.m.;

   d. They are not specifically noted in Table 6.02-1, Mixed Use Zone Uses, of this chapter, requiring Conditional Use Permit approval or listed as a prohibited use;

   e. They are not listed as a prohibited use in Section 10-6.02 (B), Prohibited Uses, of this Chapter.

   If items a through c above are not met, then approval of a Conditional Use Permit is required in accordance with Subsection 57.04, Conditional Use Permits and Minor Conditional Use Permits, of this Chapter. Exceptions to the requirement for a Conditional Use Permit for such uses may be granted at the discretion of the Planning Director on a case-by-case basis, based upon a review of site-specific conditions.

5. Group Instruction uses shall comply with the following standards:

   a. No loitering shall be permitted before or after any classes or sessions.

6. Restaurants may be permitted provided:

   a. They have only ancillary on-premise consumption of beer and wine associated with food sales;

   b. They have no separate bar area;

   c. When located within the MXD2 and MXD3 zones they are located on the ground floor facing a public street designated as a retail mixed use street; and

   d. They conform to the performance standards listed in this subsection (e) below.

   If items (a) through (c) above are not met, then approval of a Conditional Use Permit is required in accordance with Section 57, of this Chapter.

   e. Restaurant Performance Standards. Restaurants shall comply with the following performance standards:

      i. Seating shall not exceed that which the amount of parking allocated for the restaurant space would allow. A sign measuring at least one (1) foot by one (1) foot, with a lettering height of at least three (3) inches, shall be placed in a conspicuous location near the restaurant front entrance stating the maximum total seating allowed. Outdoor seating is allowed if it has been approved as part of the facility's

Minor Site Development Permit or Site Development Permit and is operated in conformance with any conditions of that approval.

ii. The restaurant shall comply with the City Council's Guidelines for Recycling Enclosures (Resolution No. 6296).

iii. The restaurant shall incorporate measures to reduce odors to acceptable levels, including, but not limited to, installation of a scrubber, carbon filter or similar equipment, on the roof vent to control odors.

iv. All the facility's floor drains, trash compactors and indoor mat and equipment washing areas shall be drained to the sanitary sewer.

v. Where applicable, the restaurant shall maintain an active account with a tallow hauling company.

vi. The restaurant shall prepare and implement a program assigning restaurant staff responsibility for complying with the following guidelines which shall be adhered to while the restaurant is in operation:

1) Wash all containers and equipment in the kitchen areas so that wash water may drain into the sanitary sewer.

2) Keep garbage dumpsters clean inside and out; replace very dirty dumpsters with new, clean ones.

3) Double bag waste to prevent leaking.

4) Place, do not drop or throw, waste-filled bags, to prevent leaking.

5) Keep the ground under and around the garbage dumpsters swept.

6) Sprinkle the ground lightly after sweeping with a mixture of water and a little bleach.

7) Hold training sessions to instruct employees on the proper procedures in the handling and disposal of food items; the general maintenance and use of the compactor and any other procedures that would assist the business in complying with all State and local health and sanitation standards. A record of such training must be kept to prove compliance with this requirement.

8) Post signs (in English and multi-lingual) inside the premises for all employees identifying procedures for food delivery and garbage disposal.

9) All garbage bins shall be stored in the garbage enclosure except for the twelve (12) hours immediately before and after garbage collection.

7. Retail and Offices shall comply with the following:

a. When located within the MXD zone:

i. Located in the area designated for ground floor retail and are less than or equal to ten thousand (10,000) square feet in gross floor area;

ii. Located in the areas not designated for ground floor retail and are less than or equal to fifty thousand (50,000) square feet in gross floor area.

b. When located within the MXD2 and MXD3 zones they are less than or equal to fifty thousand (50,000) square feet in gross floor area; d. They are not open past 10:00 p.m.;

e. They are not specifically noted in Table 6.02-1, Mixed Use Zone Uses, of this Chapter, requiring Conditional Use Permit approval or listed as a prohibited use; and

f. They are not listed as a prohibited use in Section 10-6.02 (B), Prohibited Uses, of this Chapter.

If items a through c above are not met, then approval of a Conditional Use Permit is required in accordance with Section 57, Conditional Use Permits and Minor Conditional Use Permits, of this Chapter.

C. Mixed Use and Residential-Only Development Projects in the NCMU and TC zones.

1. Mixed use developments in the NCMU and TC zones shall provide commercial or active spaces designed to accommodate neighborhood-serving commercial uses at the ground level, and may include residential units. A proposed project in NCMU1, NCMU2, TC1, and TC2 shall include a minimum non-residential component in full compliance with the requirements of its zoning district as defined in section 11-10-6.04 Mixed Use Zone General Development Standards.

2. 100% affordable developments in NCMU1, NCMU2, TC1, and TC2 are exempt from the minimum non-residential requirement.

a. 100 percent of the residential units must be affordable to low-income (earning up to 80 percent of area median income) and/or very low income (earning up to 50 percent of area median income) households, as defined by the U.S. Department of Housing and Urban Development.

b. Affordability requirements shall be administered through a deed restriction, such as a restrictive covenant or other legally enforceable recorded instrument, for a minimum term of 55 years.

6.02-2 Quasi-Public Uses within MXD, NCMU, and TC Zones

A. Churches and religious institutions are permitted in any location within the MXD, NCMU, and TC Zones.

B. The following quasi-public uses may be permitted within the MXD zones provided their location is first approved by the Planning Commission, in accordance with Subsection 57.04, Conditional Use Permits and Minor Conditional Use Permits, of this Chapter, and they are not located within 1,000 feet of the parcel boundary of another quasi-public use listed below. This distance shall be measured from the property line of the parcel where such use is located.

1. Places of meeting or assembly, such as auditoriums, banquet halls, and fraternal or union halls.
2. Hospitals or sanitariums.

3. Private elementary, middle or high schools.

4. Vocational schools, if not found objectionable due to noise, odor, vibration or other similar health, safety and welfare basis.

XI-10-6.03 Affordable Housing

Affordable housing units should be provided in all new housing projects. Except as provided in Subsection XI-10-6.02-1(C)(2), while twenty percent (20%) is the minimum goal, affordable unit requirements will be determined on a project by project basis, taking into consideration the size and location of the project, the type of housing unit, proximity to transit and the mix of affordable units in the vicinity.

XI-10-6.04 Mixed Use Zone General Development Standards

A. Standards within Specific Plan Areas. For properties located within a Specific Plan, refer to the Specific Plan for development standards. When a standard is not listed within the Specific Plan, the standards listed within the zoning ordinance shall govern.

B. General Standards. The following minimum requirements shall be observed. The minimum requirement shall be one of the following for the district classification as designated on the zoning map.

Table XI-10-6.04-1
Mixed Use Zone Development Standards

Standards	MXD	MXD2	MXD3
Non-residential lot area minimum	Individual sites shall be of such size that all space requirements provided in this section are satisfied.	Individual sites shall be of such size that all space requirements provided in this section are satisfied.	Individual sites shall be of such size that all space requirements provided in this section are satisfied.
Density, Minimum-Maximum Residential (Dwellings)[1]	21 min. 30 max. per gross acre. For additional standards refer to Section 6.04(C), Multi-Family Residential Density within the MXD, MXD2 and MXD3 zones	31 min. 40 max. per gross acre. For additional standards refer to Section 6.04(C), Multi-Family Residential Density within the MXD, MXD2 and MXD3 zones.	41 min. 60 max. per gross. For additional standards refer to Section 6.04(C), Multi-Family Residential Density within the MXD, MXD2 and MXD3 zones.
Front and Street-Side Yard Setback, Minimum	Refer to Section 6.04(D), Front and Street-Side Yard Setbacks.	Refer to Section 6.04(D), Front and Street-Side Yard Setbacks.	12 ft. min. 20 ft. max. For additional standards refer to Section 6.04(D), Front and Street-Side Yard Setbacks, of this chapter.
Interior-Side Yard Setback, Minimum[2]	Ground Level Commercial Area: 0 ft. All other areas: 10 ft.	0 ft. Except when abutting residential use and for portions of buildings over 60 ft. or four stories tall, where the interior side yards shall be a minimum of 10 ft.	10 ft. 15 ft. when abutting residential. 20 ft. for portions of buildings over 60 ft. or four stories tall.
Rear Yard Setback, Minimum[3]	10 ft.	10 ft. 15 ft. when abutting residential 20 ft. for portions of	15 ft. 20 ft. when abutting residential 30 ft. for portions of

		buildings over 60 ft. or four stories tall.	buildings over 60 ft. or four stories tall.
Floor Area Ratio, Non-Residential and Mixed Use projects	For buildings and portions thereof: .75 max.	1.5 max. Refer to Section 6.04(E), Floor Area Ratio, Non-Residential.	2.0 max. Refer to Section 6.04(E), Floor Area Ratio, Non-Residential.
Commercial Area, Minimum	Not Applicable	200 sq. ft. of retail, restaurant, or pedestrian-oriented commercial service uses, allowed in Table 6-02-1, Mixed Use Zone Uses, must be provided for every unit, using the minimum density.	Not Applicable
Building Height[4]	Principal building: 3 stories and 45 ft.	Principal building: 6 stories or 75 ft. Principal buildings with frontage along Great Mall Parkway: 12 Stories or 150 ft. Greater height, up to 20 stories may be allowed through the approval of a Conditional Use Permit.	Principal buildings: 12 stories or 150 ft. Greater height, up to 20 stories may be allowed through the approval of a Conditional Use Permit.
Landscaping	Refer to Section 6.04(G), Landscaping.	Refer to Section 6.04(G), Landscaping.	Refer to Section 6.04(G), Landscaping.
Parking	Refer to Section 53, Off Street Parking Regulations, of this Chapter.	Refer to Section 53, Off Street Parking Regulations, of this Chapter.	Refer to Section 53, Off Street Parking Regulations, of this Chapter.

[1] For MXD3 properties, density may be averaged over contiguous parcels.

[2] To mitigate the effects of adjacent service commercial or light industrial uses, increased setbacks and other measures, such as solid six-foot fence or masonry wall, shall be considered on a case by case basis by the Planning Commission during the Site Development Permit process, taking into consideration the nature of adjacent uses.

[3] See Note 2 above.

[4] Within the MXD zone, special architectural features, such as towers or corner elements may be up to 55 ft.

Table XI-10-6.04-2
NCMU Zone Development Standards

Standards	NCMU1	NCMU2	NCMU3
Lot area minimum	None	None	None

Density, Minimum-Maximum Residential (Dwellings)[1]	Maximum: 60 du/ac	Maximum: 60 du/ac	Minimum: 30 du/ac Maximum: 60 du/ac
Front and Street-Side Yard Setback, Minimum	10' Residential 0' Commercial	10' Residential 0' Commercial	10' Residential 0' Commercial
Interior-Side Yard Setback, Minimum[2]	For residential only and mixed-use developments: 10 ft. For all other non-residential developments: None required On lots abutting a single-family residential zone: 25 ft.	For residential only and mixed-use developments: 10 ft. For all other non-residential developments: None required On lots abutting a single-family residential zone: 25 ft.	For residential only and mixed-use developments: 10 ft. For all other non-residential developments: None required On lots abutting a single-family residential zone: 25 ft.
Rear Yard Setback, Minimum[3]	For residential only and mixed-use developments: 10 ft. For all other non-residential developments: None required On lots abutting a single-family residential zone: 25 ft.	For residential only and mixed-use developments: 10 ft. For all other non-residential developments: None required On lots abutting a single-family residential zone: 25 ft.	For residential only and mixed-use developments: 10 ft. For all other non-residential developments: None required On lots abutting a single-family residential zone: 25 ft.
Floor Area Ratio, Non-Residential and Mixed Use projects[4]	No min. for commercial only project. 0.20 min. commercial for mixed use projects. Minimum FAR may be calculated or distributed throughout a development and across multiple adjoining parcels. 0.50 max. Maximum FAR does not apply to hotels.	No min. for commercial only project. 0.10 min. commercial for first 100 feet of parcel depth fronting a public street for mixed-use projects. Note: Minimum commercial FAR may be calculated or distributed throughout a development and across multiple adjoining parcels and is not required to be located within the first 100 feet of parcel depth. 0.50 max.	No min. commercial FAR 0.50 max. Maximum FAR does not apply to hotels.

		Maximum FAR does not apply to hotels.	
Building Height	60’ and 5 stories	60’ or 5 stories	60’ or 5 stories
Landscaping	Refer to Section 6.04(G), Landscaping.	Refer to Section 6.04(G), Landscaping.	Refer to Section 6.04(G), Landscaping.
Parking	Refer to Section 6.04 (H) Parking.	Refer to Section 6.04 (H) Parking.	Refer to Section 6.04 (H) Parking.

[1] For NCMU3 properties, density may be averaged over contiguous parcels.

[2] To mitigate the effects of adjacent service commercial or light industrial uses, increased setbacks and other measures, such as solid six-foot fence or masonry wall, shall be considered on a case by case basis by the Planning Commission during the Site Development Permit process, taking into consideration the nature of adjacent uses.

[3] See Note 2 above.

[4] Redevelopment of an existing commercial property to include new residential uses shall calculate the minimum commercial FAR upon the redeveloped portion of the property only. The Review Authority shall have the discretion to give credit to any retained commercial areas on the same parcel or adjacent parcels under common ownership when calculating the required minimum FAR.

Table XI-10-6.04-3
TC Zone Development Standards

Standards	TC1	TC2	TC3
Lot area minimum	None	None	None
Density, Minimum-Maximum Residential (Dwellings)[1]	Maximum: 65 du/ac	Maximum: 65 du/ac	Minimum: 30 du/ac Maximum: 65 du/ac
Front and Street-Side Yard Setback, Minimum	For ground floor non-residential use: 15 ft. For ground floor residential use: 20 ft. For developments along E. Calaveras Blvd. 35 ft.	For ground floor non-residential use: 15 ft. For ground floor residential use: 20 ft. For developments along E. Calaveras Blvd. 35 ft.	For ground floor non-residential use: 15 ft. For ground floor residential use: 20 ft. For developments along E. Calaveras Blvd. 35 ft.
Interior-Side Yard Setback, Minimum[2]	For residential only and mixed-use developments: 10 ft. For all other non-residential developments: None required	For residential only and mixed-use developments: 10 ft. For all other non-residential developments: None required	For residential only and mixed-use developments: 10 ft. For all other non-residential developments: None required

	On lots abutting a single-family residential zone: 15 ft.	On lots abutting a single-family residential zone: 15 ft.	On lots abutting a single-family residential zone: 15 ft.
Rear Yard Setback, Minimum[3]	For residential only and mixed-use developments: 10 ft. For all other non-residential developments: None required On lots abutting a single-family residential zone: 15 ft.	For residential only and mixed-use developments: 10 ft. For all other non-residential developments: None required On lots abutting a single-family residential zone: 15 ft.	For residential only and mixed-use developments: 10 ft. For all other non-residential developments: None required On lots abutting a single-family residential zone: 15 ft.
Floor Area Ratio, Non-Residential and Mixed Use projects[4]	No min. for commercial only project. 0.35 min. commercial for mixed use projects. Minimum commercial FAR may be calculated or distributed throughout a development and across multiple adjoining parcels. 0.85 max. Maximum FAR does not apply to hotels.	No min. for commercial only project. 0.10 min.commercial for first 100 feet of parcel depth fronting a public street. Note: Minimum commercial FAR may be calculated or distributed throughout a development and across multiple adjoining parcels and is not required to be located within first 100 feet of parcel depth 0.85 max. Maximum FAR does not apply to hotels.	No min. commercial FAR 0.85 max. Maximum FAR does not apply to hotels.
Building Height	75’ and 6 stories	75’ and 6 stories	75’ and 6 stories
Landscaping	Refer to Section 6.04(G), Landscaping.	Refer to Section 6.04(G), Landscaping.	Refer to Section 6.04(G), Landscaping.
Parking	Refer to Section 6.04 (H) Parking.	Refer to Section 6.04 (H) Parking.	Refer to Section 6.04 (H) Parking.

[1] For TC3 properties, density may be averaged over contiguous parcels.

[2] To mitigate the effects of adjacent service commercial or light industrial uses, increased setbacks and other measures, such as solid six-foot fence or masonry wall, shall be considered on a case by case basis by the Planning Commission during the Site Development Permit process, taking into consideration the nature of adjacent uses.

[3] See Note 2 above.

[4] Redevelopment of an existing commercial property to include new residential uses shall calculate the minimum commercial FAR upon the redeveloped portion of the property only. The Review Authority shall have the discretion to give credit to any retained commercial areas on the same parcel or adjacent parcels under common ownership when calculating the required minimum FAR.

NCMU2 and TC2 Minimum Commercial Floor Area Diagram

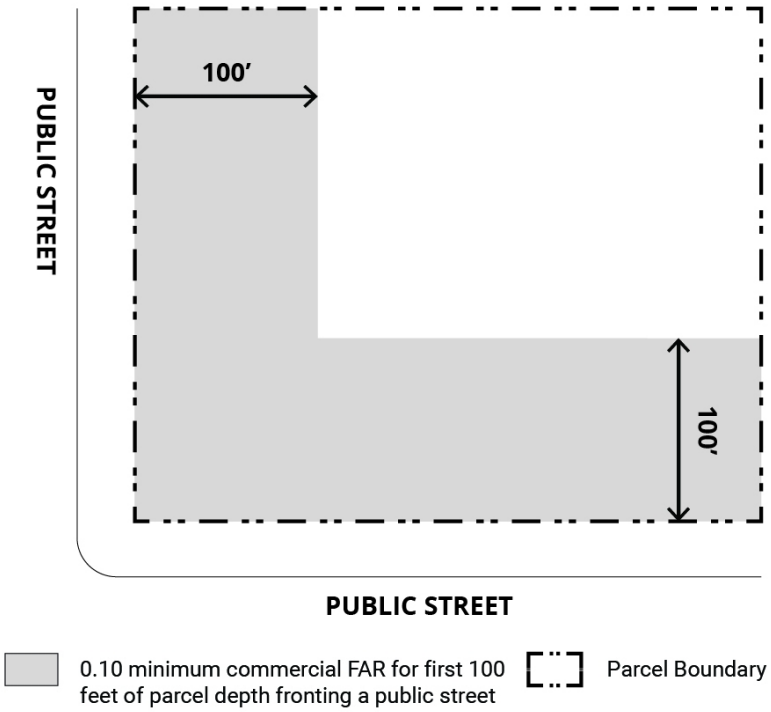

C. Multi-Family Residential Density within Mixed Use zones.

1. MXD Standards.

   a. The minimum number of multi-family residential units may be reduced for parcels less than 20,000 square feet.

   b. In buildings which have ground floor retail, restaurant, child care, or commercial service uses as allowed in Table 6.02-1, Mixed Use Zone Uses, the square footage of said uses does not contribute to the density limits.

2. MXD2 Standards.

   a. The minimum number of multi-family residential units may be reduced for parcels less than 20,000 square feet.

   b. Units with four bedrooms shall be counted as 1.5 units when calculating density.

   c. In buildings which have ground floor retail, restaurant, child care, or commercial service uses as allowed in Table 6.02-1, Mixed Use Zone Uses, the square footage of said uses does not contribute to the density limits.

3. MXD3 Standards.

    a. Units with four bedrooms shall be counted as 1.5 units when calculating density.

    b. In buildings which have ground floor retail, restaurant, child care, or commercial service uses as allowed in Table 6.02-1, Mixed Use Zone Uses, the square footage of said uses does not contribute to the density limits.

4. NCMU1, NCMU2, and NCMU3 Standards.

    a. Residential units with four bedrooms shall be counted as 1.5 units when calculating density.

5. TC1, TC2, and TC3 standards

    a. Residential units with four bedrooms shall be counted as 1.5 units when calculating density.

D. Front and Street-Side Yard Setbacks. The following standards shall apply to front and street-side yard setbacks:

1. All MXD, NCMU, and TC zones.

    a. Where a public easement prevents a building from being located at its required minimum or maximum setbacks, the building shall be located as close to the back of said easement as possible.

    b. Trellises, canopies and fabric awnings may project up to five (5) into minimum front and street side setback areas and public right of ways, provided they are not less than eight (8) feet above the sidewalk.

    c. All buildings shall be oriented towards the street. Primary building entrances shall be oriented toward the street. For buildings located on a corner lots, either street primary building entrances may be oriented to either street.

2. MXD zones:

    a. All areas.

        i. Balconies, bay windows, porches, stoops, trellises, canopies and awnings may project into the minimum setback areas provided at least sixty percent (60%) of the required setback area is landscaping.

        ii. A building's first floor may be recessed from either the maximum front and street side building setback line or the specified build-to-line for the purposes of an arcade, or a small gathering/dining or special entry area.

            The arcade shall have a minimum height of (8) feet, a minimum width of eight (8) feet. Other recessed areas may have maximum depth of ten (10) feet, and may not exceed forty percent (40%) of the building's street facing elevation. An entry door area up to nine (9) feet wide may be recessed up to four (4) feet from the back of the sidewalk.

    b. Within the Midtown Specific Plan.

        i. The Ground Level Commercial Area (as shown on the Specific Plan Land Use Map, Figure 3.1), shall have a build-to-line that is fifteen (15) feet behind the curb. The

fifteen (15) feet between the curb and the building build-to-line shall be developed with sidewalk and street trees.

c. Outside the Midtown Specific Plan.

i. Minimum of eight (8) feet and a maximum of fifteen (15) feet from back of sidewalk. The sidewalk shall be based on either the existing sidewalk or assumed ten (10) foot wide sidewalk, whichever is wider.

3. MXD2 zones:

a. All areas.

i. Balconies, bay windows, porches, stoops, trellises, canopies and awnings may project into the setback areas up to the property line.

ii. A building's first floor may be recessed from the front and street side building setback line for the purposes of an arcade, outdoor dining area, or special entry area.

The arcade shall have a minimum height of (8) feet, and a minimum width of eight (8) feet. Other recessed areas may have a maximum depth of ten (10) feet, and may not exceed twenty percent (20%) of the building's street facing elevation. An entry door area up to nine (9) feet wide may be recessed up to four (4) feet from the front and street-side building setback.

b. Within the Transit Area Specific Plan.

i. Setbacks are defined and illustrated in the street sections of Chapter 5 of the Transit Area Specific Plan.

c. Outside the Transit Area Specific Plan.

i. Minimum eight (8) feet and a maximum of fifteen (15) feet from back of sidewalk.

E. Floor Area Ratio, Non-Residential. In addition to the standards listed in Table 6.04-1 Mixed Use Zone Development Standards for MXD2 and MXD3 zoned properties, the following shall apply:

1. A Floor Area Ratio of two and a half (2.5) for non-residential buildings may be considered for individual sites with a Conditional Use Permit, in accordance with Section 57, Conditional Uses Permitted by Commission, of this Chapter.

2. There are no FAR or density limits for hotels.

3. In buildings which have ground floor retail, restaurant, child care, or commercial service uses as provided for in Table 6.02-1, Mixed Use Zone Uses, the square footage of said uses does not contribute to the FAR calculation.

4. Buildings which include both non-residential uses and residential uses on the upper floors shall be considered "non-residential," and Floor Area Ratio standards shall apply.

F. Landscaping. All required front and street setback areas shall be landscaped or paved to allow for outdoor seating, display or goods, or street furniture.

G. Park and Open Space Requirements for Residential Uses.

1. Areas within Midtown Specific Plan.

a. All residential projects within the Midtown Specific Plan area shall provide park land at a ratio of three and one-half (3½) acres per one thousand (1,000) population. Up to one and one-half (1½) of each three and one-half (3½) total park acres required (43%) may be satisfied by the provision of private recreational areas. The remaining park land requirement must be satisfied by either dedication of land to the City for public parks and open space, or payment of an in-lieu fee, as set forth in Section 9 (Park Dedication) of the Milpitas Subdivision Ordinance (Title XI, Chapter 1).

b. A minimum of twenty-five percent (25%) of the total site shall be usable open space or recreational facilities. Balconies, porches, or roof decks may be considered usable open space when properly developed for work, play or outdoor living areas.

c. Balconies, porches, or roof decks may be considered usable open space when properly developed for work, play or outdoor living areas. Balconies and porches located above ground level with a minimum dimension of 4½ feet constructed for use by dwelling units shall be exempt from the useable open space dimension standards above and within Section 2 of this Chapter, and may be considered to satisfy usable open space requirements. Each dwelling unit shall be provided with private open space as follows:

   i. Balconies and porches (above ground level): minimum sixty (60) square feet; or

   ii. Patios (at ground level): minimum one hundred square feet.

2. Areas within Transit Area Specific Plan.

   a. All residential projects shall provide park land at a ratio of three and one-half (3.5) acres per one thousand (1,000) population.

      i. Two (2) of the required three and one-half (3.5) acres must be satisfied by either dedication of land to the City for public parks and open space, or payment of an in-lieu fee, as set forth in Section 9 (Park Dedication) of the Milpitas Subdivision Ordinance (Title XI, Chapter 1). Land dedication is required if a park is shown on a property on Figure 3-8 of the Transit Area Specific Plan.

      ii. Up to one and one-half (1.5) of each three and one-half (3.5) total park acres required (43%) may be satisfied by the provision of private recreational areas. Private open space cannot be shared between separate developments.

   b. Each residential project shall provide adequate on-site usable open space or recreational facilities to the approval of the Planning Commission through the Site Development Permit process. Each dwelling unit shall be provided with private open space as follows:

      i. Balconies (above ground level): minimum forty (40) square feet; or

      ii. Patios and porches (at ground level): minimum fifty (50) square feet.

   c. All development projects shall dedicate land for parks if a park is shown on a property on Figure 3-8 of the Transit Area Specific Plan.

   d. All commercial development projects shall dedicate and/or improve public trails if a trail is shown on a property on Figure 3-8 of the Transit Area Specific Plan.

   e. Twenty percent (20%) of a landscape buffer area may count towards the public park and open space requirements when it includes trails or wide sidewalks connected to the pedestrian and bicycle network.

f. Park Sites: Parks must be bordered by public streets, or public right-of-way such as a trail or railroad right-of-way, on at least three sides.

3. Areas designated NCMU and TC

a. Park Land. All residential projects shall provide park land at a ratio of three and one-half (3.5) acres per one thousand (1,000) population.

i. Park Land must be satisfied by either dedication of land to the City for public parks and open space, or payment of an in-lieu fee, as set forth in Section 9 (Park Dedication) of the Milpitas Subdivision Ordinance (Title XI, Chapter 1).

b. Publicly Accessible Parks and Open Spaces. All mixed use or residential only projects on sites between 3 acres and 5 acres shall dedicate 5% of total site area to publicly accessible parks and open space. All mixed use or residential only projects greater than 5 acres shall dedicate 10% of total site area to publicly accessible parks and open space. Publicly accessible parks, plazas, and open spaces provided to meet the requirement below may be counted towards the park land requirement above.

c. Usable Open Space. A minimum of twenty-five percent (25%) of the total site shall be usable open space or recreational facilities. Usable open space may be provided as Common Open Space or Private Open Space.

5. Areas outside Specific Plans.

a. All residential projects outside a Specific Plan area shall comply with the park land dedication provisions provided in Section 9.06 (Amount of Park Land to be Dedicated) of the Milpitas Subdivision Ordinance.

H. Parking Summary: Requirements are located in Section 53

1. Areas designated NCMU and TC

a. The minimum number of parking spaces required for residential uses shall be as follows:

Studio and 1-bedroom (up to 1,100 sf): 1 per unit
2-bedroom (up to 1,1100 sf): 1.5 per unit
3 or more bedrooms and/or 1,101 sf or larger: 2 per unit

b. The minimum number of parking spaces required for commercial uses shall be 1 space per 300 sq.ft. of commercial use.

For other parking-related standards, refer to Section 53, Off Street Parking Regulations, of this Chapter.

TABLE IS EXCEPRT FROM SECTION 53

Mixed Use buildings or sites	
Residential use	
Studio and 1 bedroom (up to 1,100 sf)	1 per unit
2 bedroom (up to 1,100 sf)	1.5 per unit

3 or more bedrooms and/or 1,101 sf or larger	2 per unit
Guest parking for residential	
Projects with Parking structures	10% of the total required, may be uncovered
Projects with Private garages	10% of the total required, may be uncovered
Bicycle parking	5% of total required
Commercial use	
Ground Floor Retail	1 per 300 sq. ft.
Office	1 per 300 sq. ft.
Restaurants	1 per 300 sq.ft.
Short-Term Rentals	1 per unit
Other uses	Refer to specific uses within this table
Bicycle parking	5% of total auto spaces required
Mobile Homes	Refer to Section 13.07, Mobile Homes
Senior Housing	0.5 per unit plus 2 per manager's unit
Single Room Occupancy (SRO)	none required

XI-10-6.05 Reserved

XI-10-6.06 Special Development Standards

A. Utilities.

1. Utilities shall be placed in underground or subsurface conduits.
2. All mechanical equipment, ground transformers and meters shall be located and screened to minimize visual impacts.
3. Rooftop mechanical equipment shall be concealed from street level views through roof designs that area architecturally integrated with the building, such as equipment wells and parapets.

4. Public utility distribution meters, vaults and similar installations shall be consolidated in a single area whenever possible and located away from highly visible areas such as street corners and public open spaces.

5. Backflow preventors shall be located within landscaped setback areas and painted black or dark green to minimize visual impact. Where no landscaped setback areas exist the backflow preventors shall be incorporated into the front of the building to minimize visual obtrusiveness.

6. Refuse and recycling containers shall not be visible from a public or private street. Such containers shall be stored either within the parking facility of the building or within a vehicular accessway with screening designed to meet the requirements of this section.

7. Trash enclosure walls shall incorporate building materials and colors that match the architecture of the building, and be well landscaped.

8. All telecommunications antennas shall be building facade or roof mounted and screened appropriately.

9. On Main Street only telecommunication facilities that are disguised to appear as a part of the building architecture (i.e. "stealth" antennas) may be used.

B. Outdoor music

1. Outdoor music as an accessory use in conjunction with a restaurant or bar in the MXD, MXD2, MXD3, NCMU, and TC zones shall be permitted for the entertainment and enjoyment of customers at the restaurant or bar during regular operating hours. Outdoor music as an accessory use shall be limited to the hours of 9:00 am to 11:00 pm.

2. Recorded background music may be permitted outdoors on public sidewalks and other public areas subject to the standards of this Chapter and Title V – Public Health, Safety and Welfare, Chapter 213 – Noise Abatement.

3. Noise levels for outdoor music, when permitted as an accessory use to a restaurant or bar, shall not exceed a maximum range of 70 to 90 decibels (dB). See also Title V – Public Health, Safety and Welfare, Subsections V-213-2 and V-213-3, for additional regulations.

4. Larger outdoor music events, both live and recorded music, that are intended for the entertainment and enjoyment of the general public shall not be considered accessory uses and shall require a Special Event Permit pursuant to Section 15, Special Events and Activities, of this Chapter.

XI-10-6.07 Exceptions to Standards

1. Exceptions to all but the use, floor area ratio, density, and park land requirement regulations of this Section may be approved by the Planning Commission through approval of a Conditional Use Permit in accordance with the requirements of Section 57, Conditional Uses Permitted by Commission, of this Chapter.

2. In addition to the required findings under Chapter 57, the Planning Commission must be able to make the following two additional findings for such exceptions:

a. The exceptions meet the design intent identified within the Zoning District and/or Specific Plan and do not detract from the overall architectural, landscaping and site planning integrity of the proposed development.

b. The exceptions allow for a public benefit not otherwise obtainable through the strict application of the specified standard.

XI-10-6.08 Conformance with Specific Plans

Properties located within Specific Plans shall conform to the underlying Specific Plan in accordance with Section XI-10-11.06, Conformance with Specific Plans, of this Chapter.

SECTION 4. AMENDMENT OF MILPITAS MUNICIPAL CODE TITLE XI, CHAPTER 10, SECTION 6.0 (ZONING MAP)

The Zoning Map of the City of Milpitas, as amended, which was adopted as part of ordinance No. 38, enacted as Chapter XI-10 (Zoning, Planning, and Annexations) of the Milpitas Municipal Code, is hereby amended by rezoning the land use designation of approximately 273- acre area within the depicted maps as attached **Exhibit A, B, C, and D** and separately listed in **Exhibit E.**

SECTION 5. CALIFORNIA ENVIRONMENTAL QUALITY ACT

The adoption of this Ordinance is under the authority of an Addendum to the Milpitas General Plan Update Final EIR (March 2021, State Clearinghouse No. 2020070348); that was prepared pursuant to CEQA Guidelines Sections 15162 and 15164, to evaluate whether the Project's environmental impacts are covered by and within the scope of the Milpitas General Plan Update FEIR. The Addendum Evaluation details any changes in the project, changes in circumstances under which the project is undertaken, and/or "new information of substantial importance" that may cause one or more effects to environmental resources. The attached Addendum substantiates and supports the City's determination that the HOD changes are within the scope of the General Plan EIR, do not require subsequent action under CEQA Guidelines Section 15162, and adequately analyze potential environmental impacts in conjunction with the EIR. Further, although the Project has been revised from the initial Addendum, dated April 2024, Rincon Consultants, Inc., on behalf of the City, prepared a Supplemental Letter (memorialized as an attachment to the staff report, dated January 28, 2025) and found that the proposed zoning changes and the latest revisions would result in a reduced buildout compared to the Addendum analysis. This reduction in residential units and the consistency in non-residential space reduction, specifically commercial FAR minimums and maximums, ensure that the impacts would be less significant, as previously analyzed, and similar to or reduced compared to the Addendum conclusions. Additionally, the proposed changes are consistent with the overall land use and growth projections assumed within the General Plan EIR, which has already accounted for and mitigated potential environmental impacts. Since the environmental conditions have not changed since the April 2024 Addendum, the baseline conditions for analyzing impacts remain the same. Consequently, the reduced buildout further supports the conclusion that the impacts would be less significant, and the conclusions of the Addendum remain valid. Based on its independent review and consideration, the City Council hereby finds that the Addendum and the Supplemental Letter to the Addendum complies with the requirements of CEQA and adopts the conclusions in the Addendum and the Supplemental Letter to the Addendum on the basis of the evidence and reasoning set forth therein.

SECTION 6. SEVERABILITY

The provisions of this Ordinance are severable, and the invalidity of any phrase, clause, provision or part shall not affect the validity of the remainder.

SECTION 7. EFFECTIVE DATE AND POSTING

In accordance with Section 36937 of the Government Code of the State of California, this Ordinance shall take effect thirty (30) days from and after the date of its passage. The City Clerk of the City of Milpitas shall cause this Ordinance or a summary thereof to be published in accordance with Section 36933 of the Government Code of the State of California.

Exhibit A: Proposed NCMU Zones at Calaveras Blvd

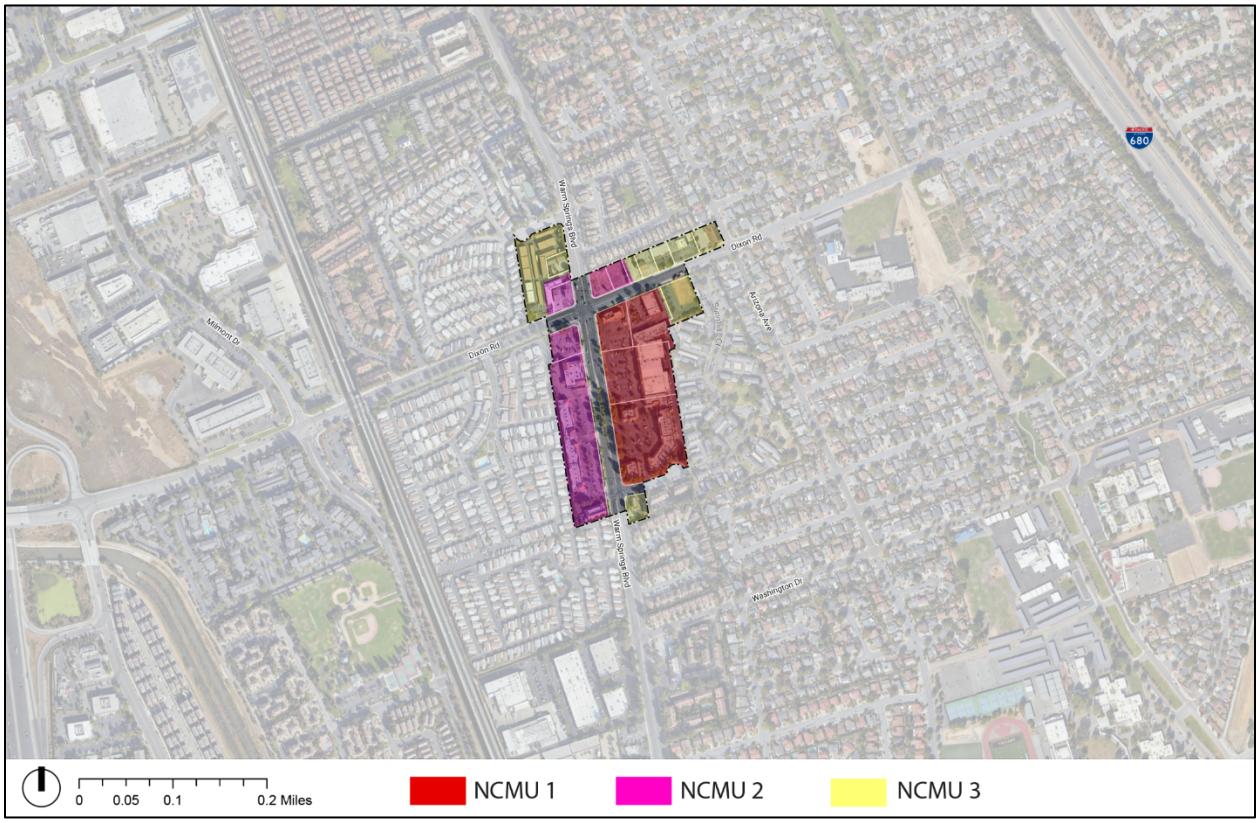

Exhibit B: Proposed NCMU Zones at Landess Ave

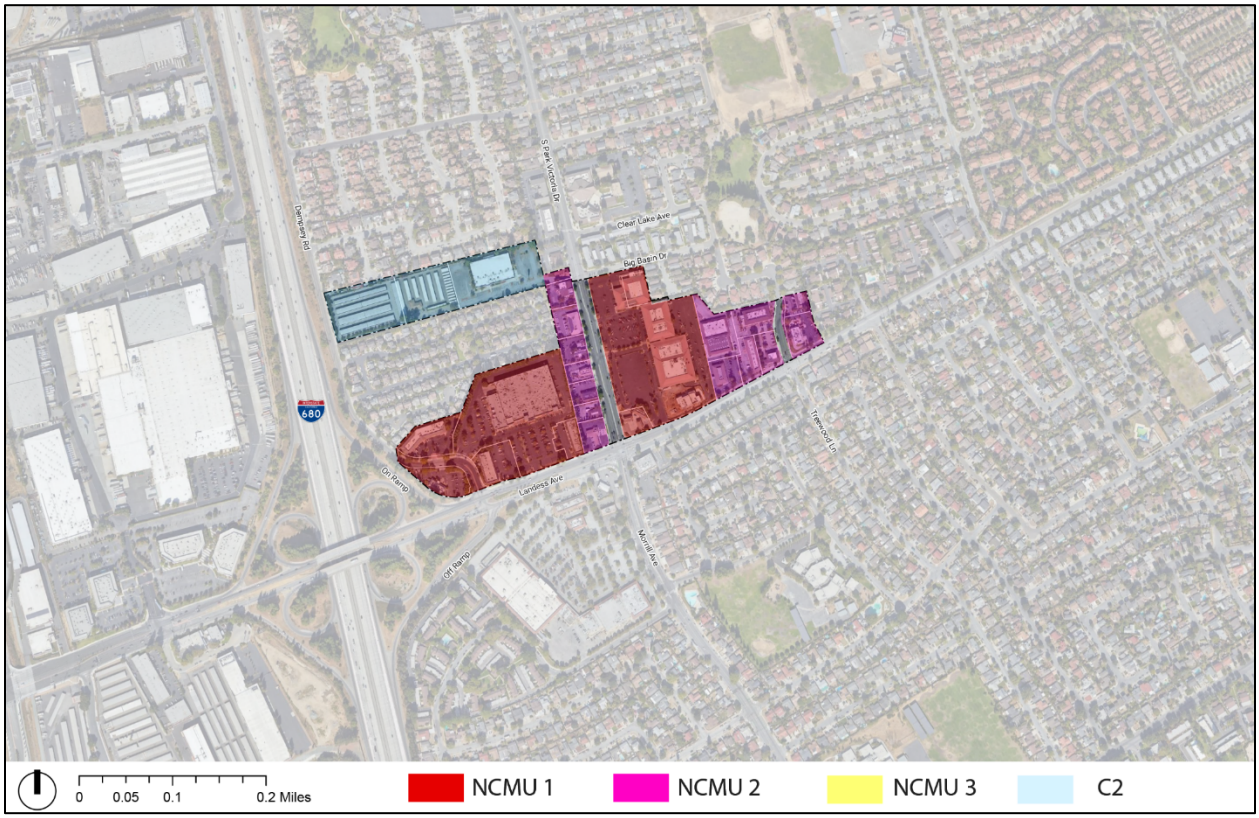

Exhibit C: Proposed NCMU Zones at Dixon Rd

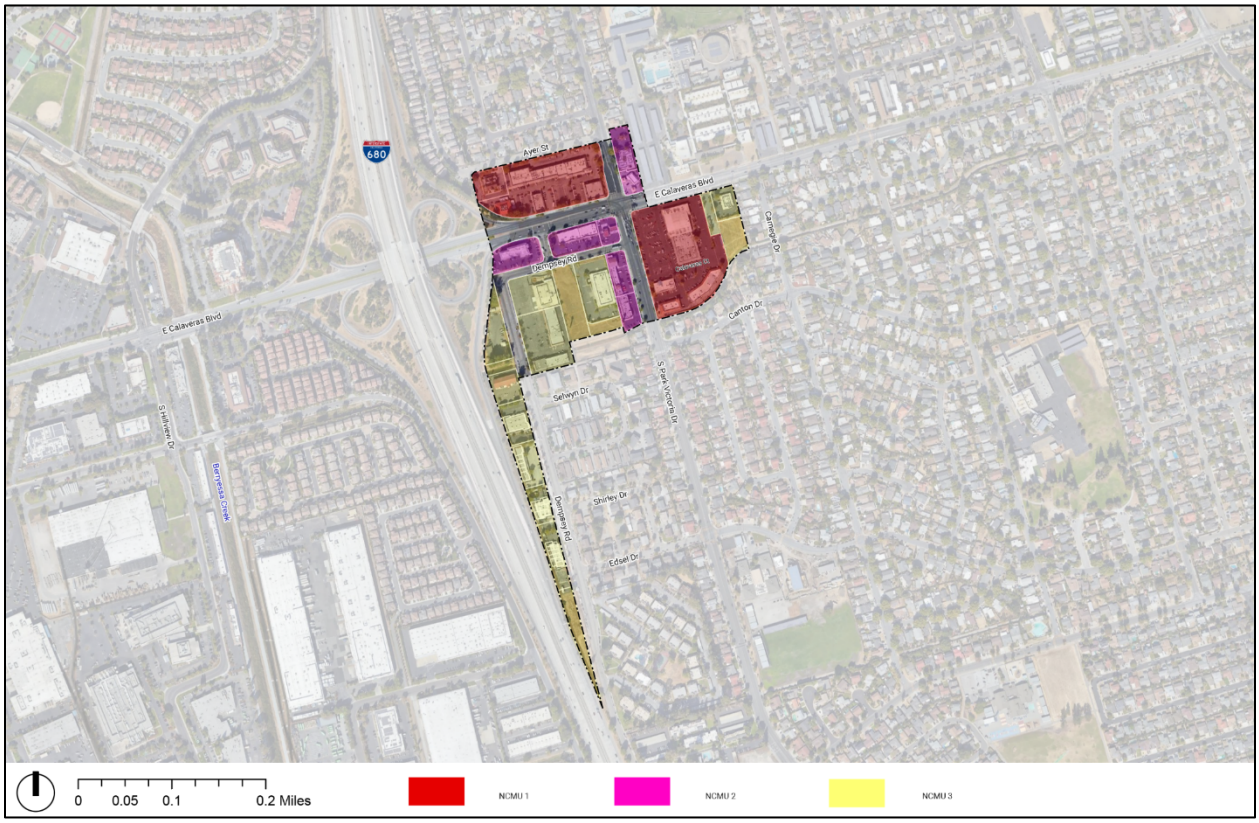

Exhibit D: Proposed TC Zones

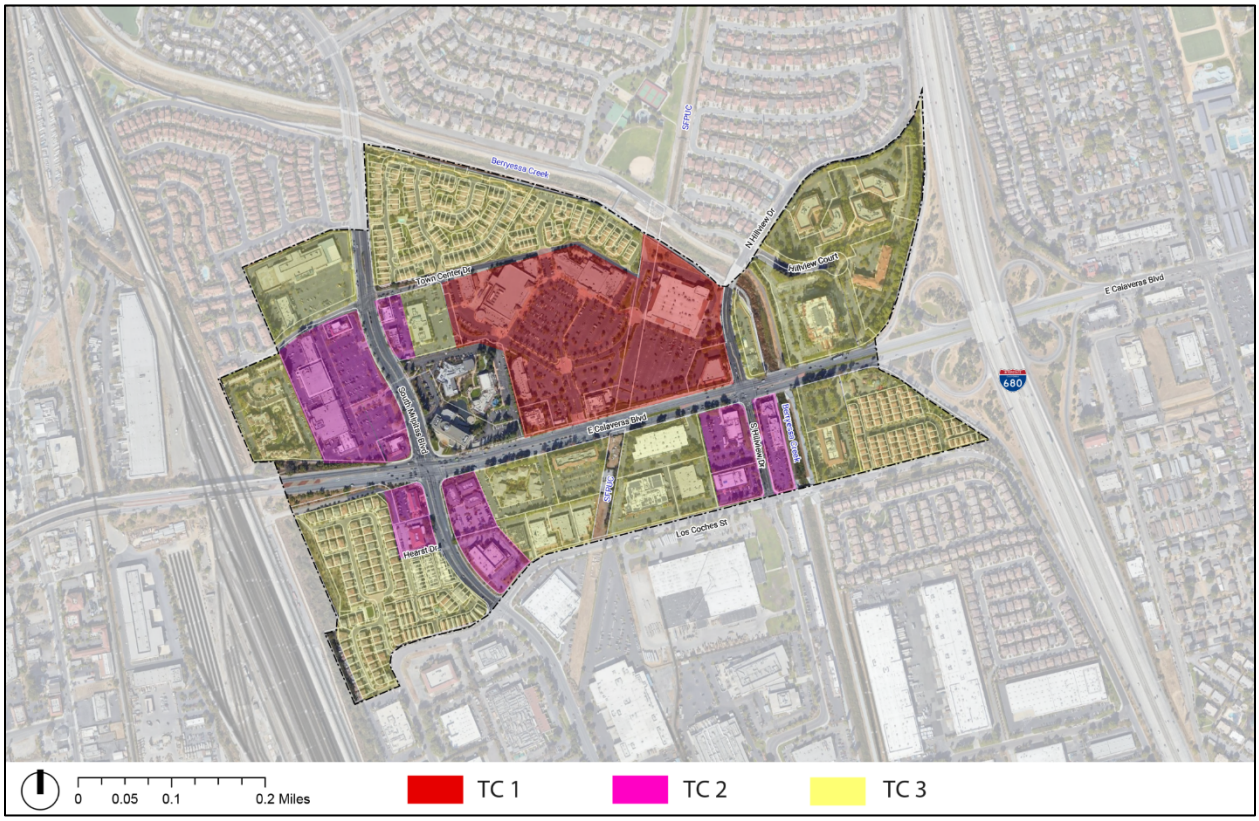

Exhibit E: Proposed Zoning updates to implement the HODs, NCMU, and TC

APN	Existing Zoning	Proposed Zoning
8804078	C1	NCMU1
2606030	C	NCMU1
8835011	C2	NCMU1
2606010	C	NCMU1
2913039	C2	NCMU1
8835017	C2	NCMU1
8835018	C1	NCMU1
8836010	C2	NCMU1
2913041	C2	NCMU1
8836044	C2	NCMU1
8835015	C1	NCMU1
2606001	C1	NCMU1
8835016	C2	NCMU1
2606011	C	NCMU1
2606029	C	NCMU1
8836045	C2	NCMU1
8836002	CSS	NCMU2
8843043	C2	NCMU2
2913014	COS	NCMU2
8804010	C1	NCMU2
8804065	C1	NCMU2
8836040	CSS	NCMU2
8836041	CSS	NCMU2
8836025	CSS	NCMU2
8804075	C15	NCMU2
2605023	C1S	NCMU2
8804043	AS	NCMU2
2913013	C1H	NCMU2
2202050	S	NCMU2
8843031	C2S	NCMU2
8843002	C2	NCMU2
8843026	C2	NCMU2
2202049	S	NCMU2
2201004	HSS	NCMU2
8843028	C2	NCMU2
8836030	CSS	NCMU2
8843027	C2	NCMU2
8836036	CSS	NCMU2

8836035	CSS	NCMU2
8804048	C1S	NCMU2
8843025	C2	NCMU2
2605024	MXD-S	NCMU2
8804077	R1	NCMU3
8804076	C1	NCMU3
2605019	C1S	NCMU3
2605021	C1S	NCMU3
2605018	C1S	NCMU3
2605020	C1S	NCMU3
8804072	C	NCMU3
2201011	HS	NCMU3
8804060	C1	NCMU3
8804001	C1S	NCMU3
8804056	C1S	NCMU3
8804073	C	NCMU3
2201003	HSS	NCMU3
2605053	C1S	NCMU3
2812025	TC	TC1
2822016	TC	TC1
2826001	TC	TC3
2812004	TC	TC1
2801001	TC	TC3
2822009	TC	TC1
2822132	TC	TC2
2822008	TC	TC1
2812013	TC	TC1
2812014	TC	TC1
2812016	TC	TC1
2822011	TC	TC2
8628051	TC	TC1
8628031	TC	TC1
8628032	TC	TC1
8628052	TC	TC1
8628033	TC	TC1
8628034	TC	TC1
2812020	TC	TC2
8628038	TC	TC2
8629079	TC	TC2
8628045	TC	TC2
8628035	TC	TC2
8628019	TC	TC2
8628040	TC	TC2

8628029	TC	TC2
8679087	TC	TC2
2826004	TC	TC3
2826006	TC	TC3
2826005	TC	TC3
2826003	TC	TC3
2812021	TC	TC3
8629060	TC	TC3
8628047	TC	TC3
8628021	TC	TC3
8628020	TC	TC3
8629060	TC	TC3
2822012	TC	TC3
8679073	TC	TC3
8628035	TC	TC3
8679076	TC	TC3
8679037	TC	TC3
8679036	TC	TC3
8679035	TC	TC3
8679034	TC	TC3
8679072	TC	TC3
8679074	TC	TC3
8679075	TC	TC3
8679033	TC	TC3
8679077	TC	TC3
8679032	TC	TC3
8679078	TC	TC3
8679031	TC	TC3
8679079	TC	TC3
8679030	TC	TC3
8679080	TC	TC3
8679029	TC	TC3
8679043	TC	TC3
8679042	TC	TC3
8679044	TC	TC3
8679041	TC	TC3
8679045	TC	TC3
8679040	TC	TC3
8679046	TC	TC3
8679047	TC	TC3
8679048	TC	TC3
8679049	TC	TC3
8679050	TC	TC3

8679051	TC	TC3
8679052	TC	TC3
8679071	TC	TC3
8679053	TC	TC3
8679070	TC	TC3
8679054	TC	TC3
8679069	TC	TC3
8679055	TC	TC3
8679068	TC	TC3
8679056	TC	TC3
8679067	TC	TC3
8679057	TC	TC3
8679066	TC	TC3
8679058	TC	TC3
8679065	TC	TC3
8679059	TC	TC3
8679064	TC	TC3
8679060	TC	TC3
8679063	TC	TC3
8679061	TC	TC3
8692029	TC	TC3
8679038	TC	TC3
8692019	TC	TC3
8679085	TC	TC3
8679062	TC	TC3
8679087	TC	TC3
8692005	TC	TC3
8692028	TC	TC3
8692026	TC	TC3
8692024	TC	TC3
8692023	TC	TC3
8692022	TC	TC3
8692020	TC	TC3
8692018	TC	TC3
8692016	TC	TC3
8692014	TC	TC3
8692013	TC	TC3
8692015	TC	TC3
8692017	TC	TC3
8626037	TC	TC3
8679039	TC	TC3
8628040	TC	TC3
8692027	TC	TC3

8692006	TC	TC3
8692007	TC	TC3
8692008	TC	TC3
8692010	TC	TC3
8692011	TC	TC3
8692012	TC	TC3
8692025	TC	TC3
8668064	TC	TC3
8668068	TC	TC3
8668070	TC	TC3
8668090	TC	TC3
8668071	TC	TC3
8668089	TC	TC3
8668072	TC	TC3
8668065	TC	TC3
8668073	TC	TC3
8668016	TC	TC3
8668076	TC	TC3
8668019	TC	TC3
8668011	TC	TC3
8668020	TC	TC3
8668012	TC	TC3
8668013	TC	TC3
8668014	TC	TC3
8668017	TC	TC3
8668015	TC	TC3
8668059	TC	TC3
8668058	TC	TC3
8668057	TC	TC3
8668061	TC	TC3
8668056	TC	TC3
8668062	TC	TC3
8668054	TC	TC3
8668082	TC	TC3
8629027	TC	TC3
8668051	TC	TC3
8668049	TC	TC3
8668048	TC	TC3
8668050	TC	TC3
8668047	TC	TC3
8668046	TC	TC3
8668052	TC	TC3
8668045	TC	TC3

8668053	TC	TC3
8668021	TC	TC3
8668030	TC	TC3
8668022	TC	TC3
8668029	TC	TC3
8668023	TC	TC3
8668028	TC	TC3
8668024	TC	TC3
8668027	TC	TC3
8668025	TC	TC3
8668026	TC	TC3
8668063	TC	TC3
8668005	TC	TC3
8668018	TC	TC3
8668084	TC	TC3
8668069	TC	TC3
8668010	TC	TC3
8668087	TC	TC3
8668009	TC	TC3
8668088	TC	TC3
8668008	TC	TC3
8668003	TC	TC3
8668007	TC	TC3
8668004	TC	TC3
8668006	TC	TC3
8668083	TC	TC3
8668078	TC	TC3
8668077	TC	TC3
8668081	TC	TC3
8668080	TC	TC3
8668075	TC	TC3
8668079	TC	TC3
8668074	TC	TC3
8668031	TC	TC3
8668032	TC	TC3
8668034	TC	TC3
8668036	TC	TC3
8668044	TC	TC3
8668043	TC	TC3
8668037	TC	TC3
8668042	TC	TC3
8668039	TC	TC3
8668041	TC	TC3

8668040	TC	TC3
8668086	TC	TC3
8668033	TC	TC3
8668060	TC	TC3
8668035	TC	TC3
8668038	TC	TC3
8668055	TC	TC3
2831016	TC	TC3
2831032	TC	TC3
2835054	TC	TC3
2833001	TC	TC3
2831033	TC	TC3
2833014	TC	TC3
2831030	TC	TC3
2833034	TC	TC3
2831029	TC	TC3
2833035	TC	TC3
2831028	TC	TC3
2833037	TC	TC3
2833038	TC	TC3
2833040	TC	TC3
2833041	TC	TC3
2831027	TC	TC3
2833042	TC	TC3
2831026	TC	TC3
2831025	TC	TC3
2833044	TC	TC3
2833011	TC	TC3
2835012	TC	TC3
2835014	TC	TC3
2835015	TC	TC3
2835016	TC	TC3
2835018	TC	TC3
2835020	TC	TC3
2835028	TC	TC3
2835029	TC	TC3
2835032	TC	TC3
2835033	TC	TC3
2835034	TC	TC3
2835035	TC	TC3
2835038	TC	TC3
2835039	TC	TC3
2835040	TC	TC3

2835043	TC	TC3
2835044	TC	TC3
2835045	TC	TC3
2835046	TC	TC3
2835047	TC	TC3
2835049	TC	TC3
2835050	TC	TC3
2835051	TC	TC3
2835053	TC	TC3
2835055	TC	TC3
2835056	TC	TC3
2835057	TC	TC3
2835059	TC	TC3
2835061	TC	TC3
2835062	TC	TC3
2835063	TC	TC3
2835064	TC	TC3
2835065	TC	TC3
2831037	TC	TC3
2831004	TC	TC3
2835019	TC	TC3
2833046	TC	TC3
2831039	TC	TC3
2831020	TC	TC3
2831012	TC	TC3
2832021	TC	TC3
2832014	TC	TC3
2835048	TC	TC3
2832018	TC	TC3
2833043	TC	TC3
2831034	TC	TC3
2833036	TC	TC3
2833019	TC	TC3
2832010	TC	TC3
2832009	TC	TC3
2832008	TC	TC3
2832002	TC	TC3
2833012	TC	TC3
2831009	TC	TC3
2835041	TC	TC3
2833023	TC	TC3
2832015	TC	TC3
2835030	TC	TC3

2835031	TC	TC3
2831011	TC	TC3
2831001	TC	TC3
2835060	TC	TC3
2831007	TC	TC3
2835006	TC	TC3
2832016	TC	TC3
2831008	TC	TC3
2835005	TC	TC3
2832017	TC	TC3
2833031	TC	TC3
2833032	TC	TC3
2832030	TC	TC3
2832029	TC	TC3
2832028	TC	TC3
2832027	TC	TC3
2831014	TC	TC3
2831015	TC	TC3
2831013	TC	TC3
2831017	TC	TC3
2831018	TC	TC3
2831010	TC	TC3
2835042	TC	TC3
2835025	TC	TC3
2835037	TC	TC3
2833039	TC	TC3
2835010	TC	TC3
2835013	TC	TC3
2832012	TC	TC3
2832022	TC	TC3
2832013	TC	TC3
2832019	TC	TC3
2833030	TC	TC3
2833003	TC	TC3
2833029	TC	TC3
2833004	TC	TC3
2833028	TC	TC3
2833005	TC	TC3
2833027	TC	TC3
2833006	TC	TC3
2833026	TC	TC3
2833007	TC	TC3
2833008	TC	TC3

2833009	TC	TC3
2833010	TC	TC3
2833025	TC	TC3
2833024	TC	TC3
2833021	TC	TC3
2833048	TC	TC3
2833015	TC	TC3
2833016	TC	TC3
2833017	TC	TC3
2833018	TC	TC3
2832011	TC	TC3
2835021	TC	TC3
2835001	TC	TC3
2835002	TC	TC3
2835022	TC	TC3
2835003	TC	TC3
2835023	TC	TC3
2835004	TC	TC3
2835024	TC	TC3
2835007	TC	TC3
2835026	TC	TC3
2835008	TC	TC3
2835027	TC	TC3
2835009	TC	TC3
2835011	TC	TC3
2831019	TC	TC3
2831021	TC	TC3
2831022	TC	TC3
2831023	TC	TC3
2831024	TC	TC3
2833045	TC	TC3
2833047	TC	TC3
2835036	TC	TC3
2833002	TC	TC3
2833033	TC	TC3
2832005	TC	TC3
2835052	TC	TC3
2835017	TC	TC3
2832020	TC	TC3
2833022	TC	TC3
2833013	TC	TC3
2835058	TC	TC3
2832007	TC	TC3

2832006	TC	TC3
2832004	TC	TC3
2832023	TC	TC3
2832003	TC	TC3
2832024	TC	TC3
2832025	TC	TC3
2832001	TC	TC3
2832026	TC	TC3
2831038	TC	TC3
2831002	TC	TC3
2831003	TC	TC3
2831036	TC	TC3
2831035	TC	TC3
2831005	TC	TC3
2831006	TC	TC3
2831031	TC	TC3

MILPITAS PLANNING COMMISSION
STAFF REPORT

February 26, 2025

APPLICATION:	**Housing Opportunity Districts (HODs), Addendum to the Milpitas General Plan 2040 EIR, General Plan Text Amendment, and Zoning Text and Map Amendments:** Review and discuss the Final Housing Opportunity Districts (HODs) and Addendum to the Milpitas General Plan 2040 EIR (SCH#: 2020070348) and provide a recommendation for approval to the Milpitas City Council. The HODs project scope includes: 1) a General Plan Map and Text amendment (GP24-0001) to update the Town Center (TWC) and Neighborhood Commercial Mixed-Use (NCMU) descriptions and amend the land use designation for certain parcels; and 2) a Zoning Map and Text amendment (ZA24-0001) to establish the Neighborhood Commercial Mixed-Use (NCMU-1,2,3) districts and subdistricts, and update the existing Town Center (TC) districts to establish the subdistricts (TC-1,2,3).
RECOMMENDATION:	Staff recommends that the Planning Commission conduct a public hearing and adopt Resolution No. 25-004, recommending that the City Council: 1) approve General Plan Map and Text Amendment No. GP24-0001 to change the descriptions of the Town Center (TWC) and Neighborhood Commercial Mixed-Use (NCMU) and change the land use designation of certain parcels; 2) approve Zoning Map and Text Amendment No. ZA24-0001 to establish the Neighborhood Commercial Mixed-Use (NCMU-1,2,3) districts and subdistricts, and update the existing Town Center (TC) districts to establish the subdistricts (TC-1,2,3); and 3) adopt the Housing Opportunity Districts Addendum to the Milpitas General Plan 2040 FEIR (SCH #2020070348) and the Supplemental Letter to the Addendum.
PROJECT LOCATION:	The NCMU zoning districts cover approximately 140 acres, and the TWC zoning districts cover approximately 133 acres within the City of Milpitas.
PROJECT CONSULTANTS:	Raimi + Associates
PROJECT STAFF:	Jay Lee, Planning Director Lillian VanHua, AICP, Principal Planner
ENVIRONMENTAL REVIEW:	An Addendum to the Milpitas General Plan Update Final EIR (FEIR) (March 2021, SCH #2020070348) has been prepared pursuant to California Environmental Quality Act (CEQA) Guidelines Sections

15162 and 15164 to evaluate whether the Project's environmental impacts are covered by and within the scope of the Milpitas General Plan Update Final EIR (FEIR). A Supplemental Letter to the Addendum was also prepared due to changes to the project since the April 2024 Addendum.

BACKGROUND

Since 1969, California law has required all cities and counties to plan to meet housing goals for residents at all income levels. Every eight years, the California Department of Housing and Community Development (HCD) and the Association of Bay Area Governments (ABAG) distribute the Regional Housing Needs Allocation (RHNA) to each City and County in the Bay Area. The City is then required to perform a comprehensive update to the Housing Element, which is a chapter in the General Plan. The Housing Element identifies specific programs and policies that the City commits to implement to help realize the City's RHNA goals and respond to related needs. When the City adopted its most recent General Plan on March 9, 2021, one aspect of its overall development plan and efforts to meet expanding housing needs was the expansion of multifamily residential opportunities in and around commercial space and aging centers to encourage and support commercial redevelopment and economic activity in these areas. When the City adopted its most recent Housing Element on January 24, 2023, that plan identified the opportunity and ability for greater residential growth in several areas of the City, including the Town Center (TWC) and Neighborhood Commercial Mixed Use (NCMU) zones and proposed additional planning and study to fulfill this opportunity and need.

In response to California's pressing affordable housing shortage and homelessness crisis, Governor Newsom's 2019-20 Budget Act earmarked $250 million for initiatives addressing these challenges. Notably, $119 million was allocated to the Local Early Action Planning Grant (LEAP), an essential non-competitive program empowering cities and counties to update planning documents and expedite housing production.

On June 29, 2020, the City of Milpitas applied for LEAP funding to establish Housing Opportunity Districts (HODs) in priority areas outlined in its General Plan. The HODs are designed to incentivize housing by allowing increased density, relaxing standards, and streamlining permitting processes to facilitate housing, especially affordable housing production. On September 2, 2020, HCD informed staff that the City of Milpitas had been awarded $300,000 in grant funds through the LEAP Program to establish HODs.

On December 12, 2021, the City Council approved and authorized the City Manager to execute a professional services agreement with Raimi and Associates to prepare the HODs in close coordination with related efforts underway, including the Metro and Gateway Specific Plans, the Housing Element Update, and a separate Assessment of Fair Housing. Per the grant agreement, the HODs project must be completed by June 30, 20254. Although this deadline has passed, HCD has granted the City extra time to close out the project.

The Housing Opportunity Districts (HOD) project plays a critical role in implementing both the General Plan and the Housing Element to increase housing in the city while creating vibrant mixed-use neighborhoods.

Work Completed

- **Best Practices Memo:** The memo provides an overview of example HODs from other cities, especially as they relate to the creation of affordable housing units and housing for special needs populations. Three of the examples focus on affordable housing and one on senior housing. Each precedent study identifies strengths and weaknesses that can inform the consideration and development of new HODs in Milpitas.
- **Planning Documents and Process Assessment:** The assessment memo reviews and summarizes existing planning documents and ordinances that impact the development of housing across the City and identifies strengths that can be enhanced and weaknesses that can be overcome through HODs.
- **Existing Conditions Analysis:** The analysis of existing conditions examines each potential HOD area and estimates the feasible development capacity based on Milpitas' current land use and zoning policies and regulations. Topics covered include the existing land use pattern, parcel size, pipeline projects, access to multimodal transportation options, site constraints, and opportunity sites.
- **Stakeholder Meetings:** Raimi and Associates and City staff presented an overview of HODs at the May 2022 Community Development Roundtable and subsequently conducted stakeholder interviews with non-profit and for-profit housing developers to better understand the constraints to building both mixed-income and 100 percent affordable housing projects.
- **1st City Council Progress Report:** On August 9, 2022, the Milpitas City Council received a progress report on the work completed and existing conditions analysis from Raimi and Associates and staff on the HODs, discussed Project objectives and priorities, and provided direction on key planning concepts and land use strategies.
- **Video presentation and survey:** Recognizing the technical nature and limited geographic scope of the Project, the team produced a series of informative videos that outlined the Project's intricacies and presented draft recommendations. The videos were published on the City's website and were followed by an open-ended survey asking the viewers to give feedback on the draft recommended standards for the NCMU and TC areas.
- **Pop-up Stations:** The City hosted four dedicated pop-up events at four different locations, which allowed City staff an opportunity to explain the Project in person. Visitors, business owners, and property owners were directed to watch the informative videos and take part in the survey to provide feedback.
- **2nd City Council Progress Report:** On October 17, 2023, the Milpitas City Council received a progress report on the HODs from Raimi and Associates and staff and provided feedback on the preferred alternative.
- **Draft HOD Project and CEQA:** Raimi and Associates prepared an internal Administrative Draft of the HODs for staff review and initiated the environmental review process per the California Environmental Quality Act (CEQA). The environmental review, conducted by Rincon Consultants, Inc., established an Addendum to the Milpitas General Plan 2040 EIR State Clearinghouse #2020070348.
- **Planning Commission Hearing:** On April 24, 2024, the Planning Commission held a public hearing on the HODs. The Planning Commission (5-0) recommended that the City Council approve the Project.

- **Additional Community Meetings:** Following the Planning Commission hearing, staff held three follow up community meetings on May 30, 2024, August 26, 2024, and December 9, 2024, to further discuss the Project and address community concerns. The meetings were well attended, with 45 community members at the first meeting, 27 at the second meeting, and 39 at the third meeting. Community members had concerns about the project regarding the City's existing infrastructure, including potential traffic impact to the City, particularly on and around Landess Avenue, parking, school district student capacity, potential building heights and privacy, affordable housing and the potential for increase in crime, property values, fiscal impact to the City, and lack of healthcare. As a result of these meetings, staff has modified the proposed development standards within the HODs, as well as removed certain parcels from the HOD project area.

Project Goals

The HOD project was initiated to increase the housing supply in the City of Milpitas while simultaneously reducing barriers associated with new housing construction. The overarching goals of the HOD project include:

Implementing General Plan policies

The HOD is intended to implement several General Plan policies identified through an extensive public input process.

Meeting current and future regional housing needs (RHNA)

The City fell short in meeting its very low-, low-, and moderate-income regional housing targets over the implementation phase of the previous Housing Element and needs to plan for more housing, especially affordable housing, to overcome its housing shortfall.

Incentivizing affordable housing

Another goal is to incentivize affordable and special needs housing in the city. By creating tailored zoning regulations, these zones will help facilitate the production of all housing types. Moreover, 100 percent affordable housing projects in NCMU and TWC are exempt from non-residential requirements.

Revitalizing aging shopping centers

Many existing commercial centers are underperforming, and their redevelopment as mixed-use projects can revitalize public spaces while adding to the City's tax base.

ANALYSIS

Project Summary

The HOD project introduces a comprehensive General Plan amendment and zoning update within the Neighborhood Commercial Mixed-Use (NCMU) and the Town Center (TC) areas of the city to allow for horizontal and vertical mix of uses, enhancing the viability of mixed-use projects.

Based on the analysis completed for this HOD project, the proposed zoning adopts a place-based and flexible approach. It establishes three distinct NCMU zones (NCMU1, NCMU2, and NCMU3) and three TC zones (TC1, TC2, and TC3). These zones consider parcel size, location, current use, and future potential. Each zone permits increased residential density and a reduced minimum non-residential floor area ratio (FAR), promoting versatility in development. Concurrently, the Project outlines General Plan amendments to update the definitions associated with these land use

designations, as well as a General Plan land use map amendment.

The proposed NCMU Zones are:

1. NCMU1: includes big box retail and grocery stores with large surface parking lots. Parcels designated NCMU1 require a minimum 0.20 FAR of non-residential use for mixed-use developments, with a 0.50 FAR maximum. No minimum FAR for commercial only projects.
2. NCMU2: includes smaller parcels with commercial uses along streets, which are ideal for mixed-use development. Parcels designated NCMU2 require a minimum of 0.1 FAR of commercial use, primarily on the ground floor with residential units above, for the first 100 feet of parcel depth fronting a public street, with a 0.50 FAR maximum. No minimum FAR for commercial only projects.
3. NCMU3: includes parcels that are less suitable for commercial use, such as those located on secondary streets, lacking street frontages, or adjacent to residential zones. NCMU3 would allow commercial, mixed-use, or residential-only development with no minimum commercial requirement. No minimum FAR for commercial only projects, but there is a 0.50 FAR maximum.

In all three NCMU zones, the maximum FAR does not apply to hotels. Building heights are limited to 60 feet and five stories.

Figure 1: NCMU Zone locations

Changes since April 2024

Following staff's presentation at the April 24, 2024 Planning Commission hearing, staff held three community meetings to discuss community concerns. As a result, staff has modified the development standards within the NCMU zoning districts, as well as removed three parcels (APNs 088-34-109, -110, and -111) from the NCMU Landess area. Specifically, staff is recommending lowering the density from 65 du/acre to 60 du/acre for all three NCMU zones and lowering the maximum building height from 75 feet to 60 feet, or five stories, whichever is less. Additionally, the minimum rear yard setback on lots that abut single-family residential zones has been increased

from 15 to 25 feet. Additionally, staff has reduced the commercial FAR minimums and maximums for mixed-use projects in all three NCMU zones. Staff also added clarifying language regarding FAR minimums for commercial-only projects and FAR maximums for hotel projects. The FAR revisions are a result of speaking with developers and property owners. The intent of the HODs project is to allow mixed-use buildings horizontally and vertically, while also allowing for financially feasible development projects that incentivize affordable housing. The Housing Element identified that the minimum requirement of commercial FAR for mixed-use projects may impede redevelopment of parcels in these zones. By reducing the commercial FAR minimums and maximums for mixed-use projects, HODs makes redevelopment financially feasible for private developers and property owners. The General Plan Text Amendment accompanying this project contemplates a maximum commercial FAR up to 0.5 within these areas and says that the NCMU designation is intended to accommodate a vertical and horizontal mix of commercial and residential uses with an emphasis on neighborhood commercial activity. Moreover, the existing General Plan language says that this designation provides opportunities for vertical and horizontal mixed-use residential development to provide for area vibrancy and to encourage the development of aging commercial centers. Although the minimum and maximums commercial FARs are lower than previously presented, the HOD project still meets the intent of the General Plan's NCMU land use designation. The original memorandum (Attachment B) lays out the original framework and development standards. However, the revised development standards and General Plan Map changes are reflected within Attachment E and Exhibit A to Exhibit 1 of Attachment A, respectively.

The proposed TC Zones are:

1. TC1: includes some successful big box retail centers with long-term leases with large surface parking lots. Parcels designated TC1 require a minimum 0.35 FAR of non-residential use for mixed-use developments.
2. TC2: includes smaller parcels with commercial uses along streets, which are ideal for mixed-use development. Parcels designated TC2 require a minimum of 0.1 FAR of commercial use, primarily on the ground floor with residential units above.
3. TC3: includes parcels that are less suitable for commercial use, such as those located on secondary streets, lacking street frontages, or adjacent to residential zones. TC3 would allow commercial, mixed-use, or residential-only development with no minimum commercial requirement.

In all three TC zones, the maximum FAR is limited to 0.85. The maximum does not apply to hotels. Building heights are also limited to 75 feet or six stories, whichever is less.

Figure 2: TC Zone locations

Furthermore, the HOD recommends a reduction in parking and open space requirements, aiming to enhance project feasibility. These proposed adjustments align with the overarching goals of the General Plan, specifically focusing on revitalizing aging shopping centers and fostering the creation of dynamic mixed-use neighborhoods.

Changes since April 2024
As a result of the community meetings and further outreach with property owners in 2024, staff has modified the development standards within the TC zoning districts. Specifically, staff is recommending increasing the maximum allowable density from 55 to 65 du/acre and added clarifying language regarding commercial FAR minimums and maximums and building height. The original memorandum (Attachment B) lays out the original framework and development standards. However, the revised development standards are reflected within Attachment E.

Other Development Standards
Parking
Parking standards in Milpitas are generally high, except in Specific Plan areas. Accommodating a greater number of parking spaces would require substantial surface area or large structured parking garages, consequently increasing the cost of the project. Thus, to enhance the feasibility of housing development in the NCMU and TC zones, the HOD proposes a reduction in the residential parking requirement.

Lower parking ratios will apply to areas designated NCMU and TC. For projects located in NCMU and TC:

- The minimum number of parking spaces required for residential uses shall be 1 space per unit.

- The minimum number of parking spaces required for commercial use shall be 1 space per 300 square feet of commercial use.

These standards are set at levels that provide adequate parking for the contemplated uses while facilitating a higher density of development these zones are designed to accommodate.

Parks and Open Space
To allow housing or mixed-use developments in the NCMU and TC zones, the HODs propose a reduction in the park land requirement compared to the citywide standard. Nevertheless, considering heightened population densities, it is crucial to emphasize the significance of high-quality open spaces in contributing to placemaking for both existing and future residents. A minimum of 25 percent of the total site shall be usable open space or recreational facilities. This goes above and beyond the existing 5 or 10 percent Objective Design Standard (ODS) requirements the City has generally adopted to promote a variety of vibrant, publicly or private accessible spaces that encourage gathering and other active uses.

For projects located in the NCMU and TC zones, the following standards shall apply:

- **Park Land**. All residential projects in the NCMU and TC areas shall provide park land at a ratio of three and one-half (3.5) acres per one thousand (1,000) population. This is a reduction from the citywide requirement of five (5) acres per one thousand (1,000) population.
- **Publicly Accessible Parks and Open Spaces.** All mixed-use or residential-only projects on sites between 3 acres and 5 acres shall dedicate 5 percent of total site area to publicly accessible parks and open space. All mixed-use or residential-only projects greater than 5 acres shall dedicate 10 percent of total site area to publicly accessible parks and open space. Publicly accessible parks and open spaces provided to meet the requirement below may be counted towards the park land requirement above.
- **Usable Open Space.** A minimum of 25 percent of the total site shall be usable open space or recreational facilities. Usable open space may be provided as Common Open Space or Private Open Space.

General Plan Implementation
The HODs will be a critical implementation tool of the 2040 General Plan, which identifies several opportunity areas throughout the City for future housing development. These areas include the two Specific Plan areas (Metro Specific Plan and Gateway-Main St. Specific Plan), four NCMU areas, and the Town Center. The City adopted its updated Metro Specific Plan on February 7, 2023 and is currently updating its Gateway-Main St. Specific Plan. The HODs will apply to three NCMU areas (as shown in Figure 1: NCMU Zone Locations) and the Town Center, where much of the future housing development is expected to occur. However, the current policies and requirements of the NCMU and TWC land use designations need to be refined to facilitate and incentivize mixed-use redevelopment in these areas and increase local commercial activity.

The NCMU land use designation establishes a ratio of one residential dwelling unit per 1,500 square feet of neighborhood-serving retail and commercial services for new mixed-use developments. While this requirement is intended to incentivize the redevelopment of older strip retail centers into new mixed-use projects, redevelopment is unlikely to occur under the current

policy framework. Based on the analysis completed for the HOD project, the consultant team and staff now favor a clear allowable density range rather than a ratio between residential and nonresidential floor area. In the NCMU areas, the HODs proposes a maximum residential density of 60 dwelling units per acre and a minimum commercial floor are ratio (FAR) of 0.10 or 0.20 depending on the parcel. 100 percent residential projects are allowed in certain areas adjacent to existing residential neighborhoods.

The TWC land use designation allows 40 residential dwelling units per acre for mixed-use developments but requires a high FAR of 0.35 for nonresidential uses. While the purpose of the nonresidential FAR requirement is to ensure that the Town Center retains its commercial activity over time, it presents a constraint to redevelopment. The current FAR of the Town Center north of Calaveras Boulevard is well below 0.35 and any redevelopment would require an additional 323,000 square feet of nonresidential floor area, which is highly unlikely in the current economic climate. In the TWC area, the HODs proposes a maximum residential density of 65 units per acre and a reduced minimum commercial FAR of 0.10 in areas ripe for redevelopment. Like the NCMU designation, 100 percent residential projects are allowed in certain areas adjacent to existing residential neighborhoods.

The HODs will build upon new General Plan policies for the NCMU and TWC areas by providing a more implementable strategy to achieve the overall goal of creating vibrant mixed-use neighborhoods in key areas throughout the City. The HODs will adopt a place-based approach to facilitate mixed-use redevelopment of specific sites within these areas while allowing viable commercial centers to remain.

Relevant General Plan goals and policies related to NCMU and TWC include:

- *Goal LU-1: Accommodate a well-balanced mix of land uses that meet the diverse needs of Milpitas residents, businesses, and visitors with places to live, work, shop, be entertained and culturally enriched.*

- *Goal LU-6: Support commercial centers that serve residential neighborhoods and provide for a variety of convenient, successful and attractive commercial uses throughout the city.*

- *Policy LU 6-4 Maintain viable neighborhood-serving commercial uses throughout the City in order to serve surrounding neighborhoods and minimize vehicle miles traveled. Encourage a diverse mix of commercial uses including retail, service, office, entertainment, and assembly uses.*

- *Policy LU 6-5 Promote reinvestment in strip commercial and shopping centers and maintain, revitalize, and redevelop aging and underperforming centers.*

- *Policy LU 6-6 Encourage redevelopment and intensification of mixed-use areas by allowing standalone vertical mixed-use, or integrated horizontal mixed-use projects in mixed use areas, consistent with the Land Use Map and policies and actions included in this element.*

The HOD project reexamines these land use designations and proposes a General Plan amendment to align them with the evolving needs and goals of the community.

Housing Element Implementation

In January 2023, the City of Milpitas approved its 6th Housing Element, which outlines programs and actions the City will undertake to fulfill its regional housing growth obligations (RHNA). In the current RHNA cycle (2023-2031), the City of Milpitas has been allocated 6,713 units, more than double the allocation from the previous cycle. Furthermore, 3,786 of the units must be affordable (i.e., below market rate), with 2,655 of those units at the low- or very-low-income affordability level, which the City has historically struggled to provide.

To address this challenge, the HODs will focus on providing practical and effective incentives for developers to build affordable housing, especially at deeper affordability levels. The Housing Element Update will rely on the HODs as a key program to implement its policies and help the City fulfill its housing goals and needs.

Relevant Housing Element goals and policies related to NCMU and TWC include:

- *Goal HE-3: Continually assess the barriers to new housing production and proactively mitigate the governmental constraints to new housing development.*

- *Policy HE 3.3: Implement recommendations in the Housing Opportunity Zone (HOZ) study to reduce barriers to new affordable housing production while balancing the need for convenient neighborhood-serving retail stores and services for existing and future residents.*

- *Policy HE 3.7: Support the adaptive reuse, renovation, conversion, or redevelopment of economically underutilized properties or buildings for residential or mixed-use development.*

The Housing Element identified the existing General Plan definitions of NCMU and TWC as restrictive and potential barriers to new housing development. The NCMU designation also falls short of the minimum density threshold deemed effective for contributing to low-income housing, as stipulated by the State's Housing and Community Development (HCD) department guidelines to accommodate RHNA in the Housing Element. To overcome this constraint, the Housing Element identified an action to establish HODs with higher residential densities, flexible commercial and development requirements, and incentives for affordable housing.

Fiscal Impact

The City retained Seifel Consulting to perform a fiscal analysis regarding proposed land use changes that would allow additional residential development to occur within the TC and NCMU zones. This analysis investigates the contribution of NCMU and TC areas to the overall sales tax revenues in the City, assessing the potential impact of the zoning updates on the City's sales tax revenue. Additionally, the study analyzes a prototypical redeveloped site within the NCMU, evaluating the cost-to-revenue ratio in various NCMU scenarios to provide insights into the financial implications of such redevelopment.

The potential fiscal impact was analyzed by evaluating alternative development scenarios for a typical property in the NCMU zone because several properties within this area are currently underutilized and have vacant commercial space. The fiscal analysis evaluated what could occur if a typical property were to be redeveloped to include housing.

The key findings of the analysis are below:

- If no zoning changes are made, no redevelopment is likely as the current General Plan commercial to residential ratios are infeasible.
- Even with the implementation of a place-based strategy, which maintains a robust minimum commercial floor area requirement for much of the HODs, only small portions of the HODs are likely to redevelop in the near future.
- Projected total General Fund revenues from new development is anticipated to exceed the total fiscal costs of providing services to future residents and employees for each of the development scenarios. This analysis indicates that new infill mixed-use and residential development is likely to have a positive fiscal impact on the City of Milpitas.

Figure 3: Potential Fiscal Impact from Typical HOD Development opportunity in FY 2022/23 Constant Dollars

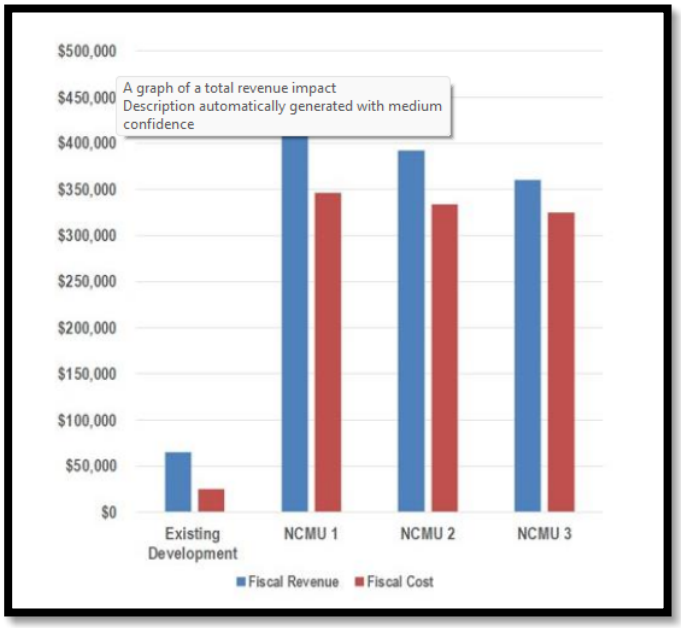

FINDINGS FOR APPROVAL (OR DENIAL)

A finding is a statement of fact relating to the information that the Planning Commission has considered in making a decision. Findings shall identify the rationale behind the decision to take a certain action.

General Plan Amendments (Milpitas Municipal Code Section XI-10-57.02(G) (1) (a), (b))

a. The proposed amendment is internally consistent with those portions of the General

Plan which are not being amended.

The proposed General Plan Map and Text Amendments are found to be internally consistent with those portions of the General Plan which are not being amended. The amendments do not introduce any conflicts or inconsistencies with the existing goals, policies, or programs of the General Plan. Instead, they build upon the existing framework of the General Plan, enhancing its effectiveness and relevance to current and future planning efforts. The General Plan envisioned opportunities in the NCMU for redevelopment of aging commercial centers by allowing multifamily dwelling units. The proposed changes facilitate this overall objective for the Project area consistent with planning objectives throughout the City and in a manner that is consistent and flexible with redevelopment needs. The General Plan similarly envisioned opportunities in the TWC for mixed-use and residential only projects that increase economic support for the commercial uses. These changes further the redevelopment of major shopping centers in these areas in a manner that supports economic growth. These changes also further the larger objectives of the General Plan for supporting the community's housing needs and guiding that development towards areas that can support this growth. The proposed changes are carefully integrated into the existing General Plan, ensuring that they align with its overall vision and objectives.

Pursuant to California Government Code Section 65863, the Planning Commission also finds the following:

The Project scope includes a General Plan Map Amendment to remove the NCMU land use designation and to revert the land use designation back to General Commercial (GNC) on certain parcels. Although this would remove the allowance of housing on certain parcels, the proposed overall density in both TWC and NCMU General Plan land use designations have been greatly increased. Further, the Project site or a portion thereof was not identified in the Housing Element to accommodate a portion of the regional housing need. The 2021 General Plan update established the new NCMU land use designation, but the Zoning Ordinance had not yet been updated to reflect this change. For the Housing Element Sites Inventory, only vacant parcels or parcels with developer interest with the NCMU land use designation were considered with an assumed maximum density of 30 dwelling units per acre. Additionally, Program 15 of the Housing Element sets a goal to foster the development of at least 200 affordable housing units in the housing opportunity zones (districts) (TC and NCMU). Based on the City's Affordable Housing Ordinance (AHO), which requires 15 percent of total units to be affordable within a new development project, the Program 15's goal of 200 affordable units, and HCD's requirement to plan for at least a 30 percent buffer in planning for residential units, the minimum number of residential units needed to comply with the Housing Element is 1,733 units. Moreover, the Project would result in approximately 2,156 new residential housing units compared to existing conditions across both districts, which greatly exceeds the minimum number required for Housing Element compliance. Any reduction in residential density, as defined in Government Code Section 65863(g), is consistent with the General Plan, together with the Housing Element, because the Project continues to remove potential barriers to redevelopment of housing projects while preserving necessary commercial opportunities that will support that development and fulfill the planned vision of these zones. The Project's residential density is consistent with the Housing Element,

and the remaining sites identified in the Housing Element remain unchanged and are adequate to meet the requirements of Government Code Section 65583.2 and to accommodate the City's share of the regional housing need pursuant to Section 65584. This finding demonstrates that the Project is not subject to Government Code Section 65583.2 and will still ensure that the City can accommodate the remaining share of the regional housing need pursuant to Section 65584.

b. *The proposed amendment will not adversely affect the public health, safety, and welfare.*

The proposed General Plan Map and Text Amendment are found to be consistent with the overall planning objectives and goals of the City of Milpitas. The map amendments affect a small number of parcels. The amendment is necessary to accommodate changing community needs and to promote sustainable growth within the city. The amendment aligns with the City's vision for responsible land use planning, economic development, and environmental stewardship. Additionally, the amendment is in compliance with applicable state and local laws, including the California Environmental Quality Act (CEQA). The proposed changes are supported by relevant data and analysis, demonstrating that they will not result in adverse impacts on the environment or public health, safety, or welfare. These changes increase housing and affordable housing stock to meet growing regional needs and expand the opportunity and flexibility of mixed-use development in areas identified by the City of being capable of sustaining additional and denser residential development. Also, the City retains authority through discretionary approvals to address project-specific health, safety, and welfare concerns. This amendment enables the City to modify its current Mixed Use Designations to prioritize the preservation of existing neighborhoods, channeling new housing growth to specific areas, and revitalize some of the older neighborhood-serving commercial land uses that support citywide community goals outlined in the Milpitas 2040 General Plan, specifically Goal LU-1: Accommodate a well-balanced mix of land uses that meet the diverse needs of Milpitas residents, businesses, and visitors with places to live, work, shop, be entertained and culturally enriched, and Goal LU-6: Support commercial centers that serve residential neighborhoods and provide for a variety of convenient, successful and attractive commercial uses throughout the city.

Zoning Map and Text Amendments (Milpitas Municipal Code Section XI-10-57.02(G)(3) (a), (b))

a. *The proposed amendment is consistent with the General Plan.*

The proposed text amendments are consistent with General Plan Policy LU 6-6, which states to encourage redevelopment and intensification of mixed-use areas by allowing standalone vertical mixed-use, or integrated horizontal mixed-use projects in mixed use areas, consistent with the Land Use Map and policies and actions included in this element. The proposed zoning adopts a place-based and flexible approach by establishing three distinct NCMU zones (NCMU1, NCMU2, and NCMU3) and three TC zones (TC1, TC2, and TC3). These zones consider factors such as parcel size, location, current use, and

future potential. Each zone permits increased residential density and a reduced minimum non-residential FAR, promoting versatility in development. The Housing Element supports this change with Policy HE 3.7: support the adaptive reuse, renovation, conversion, or redevelopment of economically underutilized properties or buildings for residential or mixed-use development. This is further supported by the General Plan's proposed text updates associated with this Project to ensure consistency between the Zoning Text and the General Plan. The Project is specifically consistent with General Plan Policy LU 6-5, which states to promote reinvestment in strip commercial and shopping centers and maintain, revitalize, and redevelop aging and underperforming centers. The proposed map amendments are consistent with the text amendments and the General Plan because the proposed map changes to the identified parcels, zoned Town Center (TC) and Neighborhood Commercial Mixed Use (NCMU), are also implementing the existing General Plan land use designations. Furthermore, the proposed amendments introduce specific development standards related to permitted uses, parking, and open space, which are intended to implement the General Plan vision for the NCMU and TWC designations.

b. *The proposed amendment will not adversely affect the public health, safety and welfare.*

The proposed text and map amendment are found to have no adverse effects on the public health, safety, and welfare. The amendments are designed to enhance the efficiency and effectiveness of the City's zoning regulations, ensuring that they remain current and responsive to changing community needs. The amendments have been carefully reviewed and analyzed to assess their potential impacts on public health, safety, and welfare. This analysis has been done through a place-based approach sensitive to the needs and circumstances of the areas that will be rezoned. These areas have been selected as being capable of supporting this development, and development standards have been selected that are specific to this area and its circumstances. As confirmed by the Addendum to the Milpitas General Plan Update Final EIR and the Supplemental Letter to the Addendum, traffic, environmental impacts, access to essential services, and community well-being will not be impacted in a manner that would significantly affect public health, safety, and welfare. Also, the City retains authority through discretionary approvals to address project-specific health, safety, and welfare concerns.

ENVIRONMENTAL REVIEW

The Milpitas City Council certified an Environmental Impact report (SCH #2020070348) for the General Plan Update in 2021. The EIR addressed the potential environmental effects of the planned buildout of Milpitas through the year 2040 and concluded that implementation of the General Plan would result in various levels of environmental impacts. Mitigation measures were incorporated into the EIR to reduce potential impacts from development under the General Plan.

An Addendum to the Milpitas General Plan Update Final EIR (FEIR) (March 2021, SCH #2020070348) has been prepared pursuant to CEQA Guidelines Sections 15162 and 15164, to evaluate whether the Project's environmental impacts are covered by and within the scope of the Milpitas General Plan Update Final EIR (FEIR).

The Addendum Evaluation details any changes in the Project, changes in circumstances under

which the Project is undertaken, and/or "new information of substantial importance" that may cause one or more effects to environmental resources.

The attached Addendum substantiates and supports the City's determination that the HOD changes are within the scope of the General Plan Update Final EIR (FEIR), do not require subsequent action under CEQA Guidelines Section 15162, and adequately analyze potential environmental impacts in conjunction with the FEIR.

Further, although the Project has been revised from the initial Addendum, dated April 2024, Rincon Consultants, Inc. prepared a Supplemental Letter (Attachment D) and found that the proposed zoning changes and the latest revisions would result in a reduced buildout compared to the Addendum analysis. This reduction in residential units and the consistency in non-residential space reduction, specifically commercial FAR minimums and maximums, ensure that the impacts would be less significant, as previously analyzed, and similar to or reduced compared to the Addendum conclusions. Additionally, the proposed changes are consistent with the overall land use and growth projections assumed within the General Plan EIR, which has already accounted for and mitigated potential environmental impacts. Since the environmental conditions have not changed since the April 2024 Addendum, the baseline conditions for analyzing impacts remain the same. Consequently, the reduced buildout further supports the conclusion that the impacts would be less significant, and the conclusions of the Addendum remain valid.

PUBLIC COMMENT/OUTREACH

The consultant team performed outreach during various phases of the HOD project. The consultant team, with support from City staff, focused outreach efforts citywide and locally around each of the NCMU and TC planning areas. Community engagement was conducted in two distinct phases. Initially, at the Project's outset, efforts were focused on creating awareness about the Project through factsheets and conducting stakeholder interviews to gain insights into challenges related to housing construction. Subsequently, during the second half, the team produced informational videos to present the draft NCMU and TC zone recommendations to the community and facilitated focus group discussions with stakeholders. The valuable inputs gathered during these engagements were incorporated into the final draft of the zoning standards. Following the April 2024 Planning Commission hearing, the City received a petition against the project. City staff responded to the petition and the responses were posted to the City's website at https://www.milpitas.gov/DocumentCenter/View/6266/FAQs-and-Response-to-Changeorg-Petition. Then staff and the consultant team conducted three additional community meetings (May 30, 2024, August 26, 2024, and December 9, 2024) to further discuss the project and address community concerns. Staff also met with members of the community individually to answer questions and further refine the Project's details. A notice of this hearing was published in the Milpitas Post on February 6, 2025, and posted at City Hall and on the City's website at www.milpitas.gov. At the time of writing this report, no comments have been received regarding the proposed Housing Opportunity District.

STAFF RECOMMENDATION

Staff recommends that the Planning Commission:

1. Open the Public Hearing to receive comments;
2. Close the Public Hearing; and
3. Adopt Resolution No. 25-004, recommending that the City Council: 1) approve General Plan Map and Text Amendment No. GP24-0001 to change the description of the Town Center (TWC) and Neighborhood Commercial Mixed-Use (NCMU) descriptions and change the land use designation of certain parcels; 2) approve a Zoning map and text amendment (ZA24-0001) to establish the Neighborhood Commercial Mixed-Use (NCMU-1,2,3) districts and subdistricts, and update the existing Town Center (TC) districts to establish the subdistricts (TC-1,2,3); and 3) adopt the Housing Opportunity District Addendum to the Milpitas General Plan 2040 FEIR (SCH #2020070348) and the Supplemental Letter to the Addendum.

ATTACHMENTS:

A: Planning Commission Resolution No. 25-004
- *Exhibit 1: Draft City Council Resolution for General Plan Amendment*
  - *Exhibit A: General Plan Map Amendment*
- *Exhibit 2: Draft Zoning Text and Map Amendments Ordinance*
  - *Exhibit A: Zoning Map Amendment for NCMU Zones at Calaveras Blvd*
  - *Exhibit B: Zoning Map Amendment for NCMU Zones at Landess Ave*
  - *Exhibit C: Zoning Map Amendment for NCMU Zones at Dixon Rd*
  - *Exhibit D: Zoning Map Amendment for TC Zones at Town Center*
  - *Exhibit E: List of Affected APNs*

B: Housing Opportunities District Memorandum
C: CEQA Addendum to the Milpitas General Plan Update Final EIR (FEIR) (SCH #2020070348)
D: CEQA Supplemental Letter to the EIR Addendum, dated January 28, 2025
E: Redline track changes to Sec.6 Mixed Use Zones and Standards TC NCMU and GP Designation.

Docusign Envelope ID: CBF2C20F-5303-4A8A-B89A-337ED5371F11

RESOLUTION NO. 25-004

A RESOLUTION OF THE PLANNING COMMISSION OF THE CITY OF MILPITAS RECOMMENDING THAT THE CITY COUNCIL: 1) APPROVE GENERAL PLAN MAP AND TEXT AMENDMENT NO. GP24-0001 TO CHANGE THE DESCRIPTION OF THE TOWN CENTER (TWC) AND NEIGHBORHOOD COMMERCIAL MIXED-USE (NCMU) DESCRIPTIONS AND CHANGE THE LAND USE DESIGNATION OF CERTAIN PARCELS; 2) APPROVE A ZONING MAP AND TEXT AMENDMENT (ZA24-0001) TO ESTABLISH THE NEIGHBORHOOD COMMERCIAL MIXED-USE (NCMU-1,2,3) DISTRICTS AND SUBDISTRICTS, AND UPDATE THE EXISTING TOWN CENTER (TC) DISTRICTS TO ESTABLISH THE SUBDISTRICTS (TC-1,2,3); AND 3) ADOPT THE HOUSING OPPORTUNITY DISTRICT ADDENDUM TO THE MILPITAS GENERAL PLAN 2040 FEIR (SCH #2020070348) AND THE SUPPLEMENTAL LETTER TO THE ADDENDUM.

WHEREAS, in response to California's pressing affordable housing shortage and homelessness crisis, Governor Newsom's 2019-20 Budget Act earmarked $250 million for initiatives addressing these challenges. Notably, $119 million was allocated to the Local Early Action Planning Grant (LEAP), an essential non-competitive program empowering cities and counties to update planning documents and expedite housing production; and

WHEREAS, in September 2020, the City of Milpitas applied for LEAP funding to establish Housing Opportunity Districts (HOD) in priority areas outlined in its General Plan. HODs are designed to incentivize housing by allowing increased density, relaxed standards, streamlined permitting processes, and financial support for affordable housing; and

WHEREAS, the City was awarded a $300,000 LEAP grant; the City subsequently engaged Raimi and Associates through a professional services agreement to draft the HODs by June 2024, in tandem with other ongoing planning initiatives; and

WHEREAS, the California Department of Housing and Community Development (HCD) granted the City an extension to complete the project; and

WHEREAS, the "Planning Area" for the Housing Opportunity Districts (HOD is defined as the area within the defined boundaries, including the NCMU, which covers approximately 140 acres, and the TWC, which covers approximately 133 acres, within the City of Milpitas General Plan Planning Area; and

WHEREAS, the City's consultants and staff held public workshops to identify key issues and challenges that Milpitas may face in the Planning Area and the City generally over the next 20 years; and

WHEREAS, the City Council and Planning Commission received periodic briefings from city staff and the consultant team to review input and receive information relevant to the specific topics addressed in the Planning Area update work, and to provide direction and

Docusign Envelope ID: CBF2C20F-5303-4A8A-B89A-337ED5371F11

guidance to staff and the consultant team regarding land use opportunity areas and development of the preferred land use map; and

WHEREAS, the Housing Opportunity Districts (HOD) project plays a critical role in implementing both the whole 2040 General Plan and the 2023-2031 Housing Element and the efforts therein to increase housing in the city while creating vibrant mixed-use neighborhoods that foster redevelopment and economic opportunity to support commercial activity; and

WHEREAS, the City made available the draft Housing Opportunity Districts (HODs) memorandum to the public, affected public entities and agencies in compliance with state law (Government Code Sections 65450 – 65457), and in accordance with Government Code Sections 65352.3, contacted California Native American tribes that are on the contact list maintained by the Native American Heritage Commission to invite those tribes to consult on the proposed Housing Opportunity Districts; and

WHEREAS, the City released the Public Review Draft Housing Opportunity Districts (HODs) memorandum in March 2024 and invited comments by the public from March 22, 2024, and up to the adoption of the Plan and has updated the draft Housing Opportunity Districts (HODs) memorandum and made the final version available on the Project website (https://www.milpitas.gov/1119/Housing-Opportunity-Districts-HOD)); and

WHEREAS, on April 24, 2024, the City of Milpitas Planning Commission held a duly noticed public hearing on the General Plan Text Amendment, Zoning Map and Text Amendments, and Addendum to Milpitas General Plan 2040, related to the Housing Opportunity Districts (HODs), considered all written and oral reports of staff and public testimony on the matter, and such other matters as are reflected in the record of this matter; and

WHEREAS, the Planning Commission recommended (5-0) that the City Council approve the Project; and

WHEREAS, due to community concerns, the City held additional community meetings on May 30, 2024, August 26, 2024, and December 9, 2024; and

WHEREAS, the City further revised the Housing Opportunity Districts (HODs) development standards and project boundary and presented the revisions at a community meeting on December 9, 2024; and

WHEREAS, the City prepared an Addendum pursuant to CEQA Guidelines Sections 15162 and 15164, to evaluate whether the Project's environmental impacts are covered by and within the scope of the Milpitas General Plan Update Final EIR (March 2021, State Clearinghouse Number 2020070348); and

WHEREAS, the Addendum substantiates and supports the City's determination that the HOD changes are within the scope of the General Plan EIR, do not require subsequent action under CEQA Guidelines Section 15162, and adequately analyze potential environmental impacts in conjunction with the EIR; and

Docusign Envelope ID: CBF2C20F-5303-4A8A-B89A-337ED5371F11

WHEREAS, a Supplemental Letter to the Addendum was prepared in response to the Project revisions and found that the proposed the proposed changes are consistent with the overall land use and growth projections assumed within the General Plan EIR, which already accounted for and mitigated potential environmental impacts; and

WHEREAS, since the environmental conditions have not changed since the April 2024 Addendum, the baseline conditions for analyzing impacts remain the same. Consequently, the reduced buildout further supports the conclusion that the impacts would be less significant, and the conclusions of the Addendum remain valid; and

WHEREAS, pursuant to the California Environmental Quality Act (Public Resources Code, § 21000 et seq.), the State CEQA Guidelines (California Code of Regulations, title 14, § 15000 et seq.) (collectively, "CEQA"), the City of Milpitas is the lead agency for the proposed project described below; and

WHEREAS, the City of Milpitas, California (the "City") is a municipal corporation, duly organized under the constitution and laws of the State of California; and

WHEREAS, California Government Code Section 65300 et seq. requires each city to prepare and adopt a comprehensive, long-term general plan for the physical development of the county or city; and

WHEREAS, Section 3.03 of Chapter 10 Zoning of Title XI of the Milpitas Municipal Code, divides the City into zoning districts; and

WHEREAS, the Planning Commission is an advisory body to the City Council; and

WHEREAS, the City Council is the final authority on General Plan, Specific Plan, and Zoning amendments, including amendments to the Zoning Map; and

WHEREAS, the City has prepared a General Plan Map and Text Amendment ("Amendment") to the City's General Plan implementing the HODs (General Plan Land Use Map and Text Amendment No. GP24-0001) with a proposed effectuating Resolution for adoption by the City Council, which is attached and incorporated herein by reference as Exhibit "A"; and

WHEREAS, the City has prepared a Zoning Map and Text Amendment ("Amendment") to the City's Zoning Map and Zoning Ordinance Text implementing the HODs (Zoning Map and Text Amendment No. ZA24-0001) with a proposed effecting Ordinance for adoption by the City Council, which is attached and incorporated herein by reference as Exhibit "B"; and

WHEREAS, the Planning Commission makes and accepts as its own the findings set forth in this resolution; and

Docusign Envelope ID: CBF2C20F-5303-4A8A-B89A-337ED5371F11

WHEREAS, on February 26, 2025, the City of Milpitas Planning Commission held a duly noticed public hearing on the General Plan Land Use Map and Text Amendment, Zoning Map and Text Amendments, and Addendum to Milpitas General Plan 2040 and Supplemental Letter to the Addendum, related to the Housing Opportunity Districts (HODs), considered all written and oral reports of staff and public testimony on the matter, and such other matters as are reflected in the record of this matter; and

NOW THEREFORE, the Planning Commission of the City of Milpitas hereby finds, determines and resolves as follows:

SECTION 1. Recitals

The Planning Commission has duly considered the full record before it, which may include but is not limited to such things as all published staff reports, oral and written testimony by staff, the Planning Commission, and the public, and all other relevant materials and evidence submitted or provided to the Planning Commission. Furthermore, the recitals set forth above are found to be true and correct and are incorporated herein by reference.

SECTION 2. California Environmental Quality Act

The City prepared an Addendum to the Milpitas General Plan 2040 EIR (SCH#: 2020070348) (memorialized as an attachment to the Staff report, dated April 24, 2024) for the proposed Project in accordance with the California Environmental Quality Act (CEQA).

The Addendum Evaluation details any changes in the project, changes in circumstances under which the project is undertaken, and/or "new information of substantial importance" that may cause one or more effects to environmental resources.

The Addendum substantiates and supports the City's determination that the HOD changes are within the scope of the General Plan EIR, does not require subsequent action under CEQA Guidelines Section 15162, and adequately analyze potential environmental impacts in conjunction with the EIR.

Further, although the Project has been revised from the initial Addendum, dated April 2024, Rincon Consultants, Inc., on behalf of the City, prepared a Supplemental Letter (memorialized as an attachment to the staff report, dated January 28, 2025) and found that the proposed zoning changes and the latest revisions would result in a reduced buildout compared to the Addendum analysis. This reduction in residential units and the consistency in non-residential space reduction, specifically commercial FAR minimums and maximums, ensure that the impacts would be less significant, as previously analyzed, and similar to or reduced compared to the Addendum conclusions. Additionally, the proposed changes are consistent with the overall land use and growth projections assumed within the General Plan EIR, which has already accounted for and mitigated potential environmental impacts. Since the environmental conditions have not changed since the April 2024 Addendum, the baseline conditions for analyzing impacts remain the same. Consequently, the reduced buildout further supports the conclusion that the impacts would be less significant, and the conclusions of the Addendum remain valid.

Docusign Envelope ID: CBF2C20F-5303-4A8A-B89A-337ED5371F11

The Planning Commission has been provided the Addendum to the Milpitas General Plan 2040 EIR (SCH#: 2020070348) and the Supplemental Letter to the Addendum and findings to review and consider in making a recommendation to the City Council to adopt the Housing Opportunity Districts (HODs).

Subject to the City Council's ultimate adoption and approvals, the Planning Commission approves, recommends the City Council approve, and adopts this Addendum and the Supplemental Letter as if fully set forth herein and finds in light of the full record before it, including the Addendum and the Supplemental Letter, that its actions are consistent with CEQA and State CEQA guidelines.

SECTION 3. General Plan Map and Text Amendments (Milpitas Municipal Code Section XI-10-57.02(G) (1) (a), (b))

The Planning Commission approves and adopts the analysis, recommendations, and findings set forth in the final Housing Opportunity Districts (HODs) memorandum, as if fully set forth herein. The Planning Commission further and specifically makes the following findings based on the evidence in the public record in support of General Plan Amendment Permit No. GP24-0001:

a. *The proposed amendment is internally consistent with those portions of the General Plan which are not being amended.*

The proposed General Plan Map and Text Amendments are found to be internally consistent with those portions of the General Plan which are not being amended. The amendments do not introduce any conflicts or inconsistencies with the existing goals, policies, or programs of the General Plan. Instead, they build upon the existing framework of the General Plan, enhancing its effectiveness and relevance to current and future planning efforts. The General Plan envisioned opportunities in the NCMU for redevelopment of aging commercial centers by allowing multifamily dwelling units. The proposed changes facilitate this overall objective for the Project area consistent with planning objectives throughout the City and in a manner that is consistent and flexible with redevelopment needs. The General Plan similarly envisioned opportunities in the TWC for mixed-use and residential only projects that increase economic support for the commercial uses. These changes further the redevelopment of major shopping centers in these areas in a manner that supports economic growth. These changes also further the larger objectives of the General Plan for supporting the community's housing needs and guiding that development towards areas that can support this growth. The proposed changes are carefully integrated into the existing General Plan, ensuring that they align with its overall vision and objectives.

Pursuant to California Government Code Section 65863, the Planning Commission also finds the following:

Docusign Envelope ID: CBF2C20F-5303-4A8A-B89A-337ED5371F11

The Project scope includes a General Plan Map Amendment to remove the NCMU land use designation and to revert the land use designation back to General Commercial (GNC) on certain parcels. Although this would remove the allowance of housing on certain parcels, the proposed overall density in both TWC and NCMU General Plan land use designations have been greatly increased. Further, the Project site or a portion thereof was not identified in the Housing Element to accommodate a portion of the regional housing need. The 2021 General Plan update established the new NCMU land use designation, but the Zoning Ordinance had not yet been updated to reflect this change. For the Housing Element Sites Inventory, only vacant parcels or parcels with developer interest with the NCMU land use designation were considered with an assumed maximum density of 30 dwelling units per acre. Additionally, Program 15 of the Housing Element sets a goal to foster the development of at least 200 affordable housing units in the housing opportunity zones (districts) (TC and NCMU). Based on the City's Affordable Housing Ordinance (AHO), which requires 15 percent of total units to be affordable within a new development project, the Program 15's goal of 200 affordable units, and HCD's requirement to plan for at least a 30 percent buffer in planning for residential units, the minimum number of residential units needed to comply with the Housing Element is 1,733 units. Moreover, the Project would result in approximately 2,156 new residential housing units compared to existing conditions across both districts, which greatly exceeds the minimum number required for Housing Element compliance. Any reduction in residential density, as defined in Government Code Section 65863(g), is consistent with the General Plan, together with the Housing Element, because the Project continues to remove potential barriers to redevelopment of housing projects while preserving necessary commercial opportunities that will support that development and fulfill the planned vision of these zones. The Project's residential density is consistent with the Housing Element, and the remaining sites identified in the Housing Element remain unchanged and are adequate to meet the requirements of Government Code Section 65583.2 and to accommodate the City's share of the regional housing need pursuant to Section 65584. This finding demonstrates that the Project is not subject to Government Code Section 65583.2 and will still ensure that the City can accommodate the remaining share of the regional housing need pursuant to Section 65584.

b. *The proposed amendment will not adversely affect the public health, safety, and welfare.*

The proposed General Plan Map and Text Amendment are found to be consistent with the overall planning objectives and goals of the City of Milpitas. The map amendments affect a small number of parcels. The amendment is necessary to accommodate changing community needs and to promote sustainable growth within the city. The amendment aligns with the City's vision for responsible land use planning, economic development, and environmental stewardship. Additionally, the amendment is in compliance with applicable state and local laws, including the California Environmental Quality Act (CEQA). The proposed changes are supported by relevant data and analysis, demonstrating that they will not result in adverse

Docusign Envelope ID: CBF2C20F-5303-4A8A-B89A-337ED5371F11

impacts on the environment or public health, safety, or welfare. These changes increase housing and affordable housing stock to meet growing regional needs and expand the opportunity and flexibility of mixed-use development in areas identified by the City of being capable of sustaining additional and denser residential development. Also, the City retains authority through discretionary approvals to address project-specific health, safety, and welfare concerns. This amendment enables the City to modify its current Mixed Use Designations to prioritize the preservation of existing neighborhoods, channeling new housing growth to specific areas, and revitalize some of the older neighborhood-serving commercial land uses that support citywide community goals outlined in the Milpitas 2040 General Plan, specifically Goal LU-1: Accommodate a well-balanced mix of land uses that meet the diverse needs of Milpitas residents, businesses, and visitors with places to live, work, shop, be entertained and culturally enriched, and Goal LU-6: Support commercial centers that serve residential neighborhoods and provide for a variety of convenient, successful and attractive commercial uses throughout the city.

SECTION 4. Zoning Map and Text Amendments (Milpitas Municipal Code Section XI-10-57.02(G) (3) (a), (b))

The Planning Commission approves and adopts the analysis, recommendations, and findings set forth in the final Housing Opportunity Districts (HODs) memorandum, as if fully set forth herein. The Planning Commission further and specifically makes the following findings based on the evidence in the public record in support of Zoning Text amendment Permit No. ZA24-0001:

a. The proposed amendment is consistent with the General Plan.

The proposed text amendments are consistent with General Plan Policy LU 6-6, which states to encourage redevelopment and intensification of mixed-use areas by allowing standalone vertical mixed-use, or integrated horizontal mixed-use projects in mixed use areas, consistent with the Land Use Map and policies and actions included in this element. The proposed zoning adopts a place-based and flexible approach by establishing three distinct NCMU zones (NCMU1, NCMU2, and NCMU3) and three TC zones (TC1, TC2, and TC3). These zones consider factors such as parcel size, location, current use, and future potential. Each zone permits increased residential density and a reduced minimum non-residential FAR, promoting versatility in development. The Housing Element supports this change with Policy HE 3.7: support the adaptive reuse, renovation, conversion, or redevelopment of economically underutilized properties or buildings for residential or mixed-use development. This is further supported by the General Plan's proposed text updates associated with this Project to ensure consistency between the Zoning Text and the General Plan. The Project is specifically consistent with General Plan Policy LU 6-5, which states to promote reinvestment in strip commercial and shopping centers and maintain, revitalize, and redevelop aging and underperforming centers. The proposed map amendments are consistent with the text amendments and the General Plan because the proposed map changes to the identified parcels, zoned Town Center (TC) and Neighborhood

Docusign Envelope ID: CBF2C20F-5303-4A8A-B89A-337ED5371F11

Commercial Mixed Use (NCMU), are also implementing the existing General Plan land use designations. Furthermore, the proposed amendments introduce specific development standards related to permitted uses, parking, and open space, which are intended to implement the General Plan vision for the NCMU and TWC designations.

b. The proposed amendment will not adversely affect the public health, safety and welfare.

The proposed text and map amendment are found to have no adverse effects on the public health, safety, and welfare. The amendments are designed to enhance the efficiency and effectiveness of the City's zoning regulations, ensuring that they remain current and responsive to changing community needs. The amendments have been carefully reviewed and analyzed to assess their potential impacts on public health, safety, and welfare. This analysis has been done through a place-based approach sensitive to the needs and circumstances of the areas that will be rezoned. These areas have been selected as being capable of supporting this development, and development standards have been selected that are specific to this area and its circumstances. As confirmed by the Addendum to the Milpitas General Plan Update Final EIR and the Supplemental Letter to the Addendum, traffic, environmental impacts, access to essential services, and community well-being will not be impacted in a manner that would significantly affect public health, safety, and welfare. Also, the City retains authority through discretionary approvals to address project-specific health, safety, and welfare concerns.

SECTION 5. Planning Commission Action

The Planning Commission of the City of Milpitas hereby adopts Resolution No. 25-004 recommending that the City Council: 1) approve General Plan Map and Text Amendment No. GP24-0001 to change the description of the Town Center (TWC) and Neighborhood Commercial Mixed-Use (NCMU) descriptions, change the land use designation of certain parcels, and adopt the implementing proposed resolution in Exhibit "A"; 2) approve a Zoning Map and Text Amendment (ZA24-0001) to establish the Neighborhood Commercial Mixed-Use (NCMU-1,2,3) districts and subdistricts, and update the existing Town Center (TC) districts to establish the subdistricts (TC-1,2,3) and adopt the implementing proposed ordinance in Exhibit "B"; and 3) adopt the Housing Opportunity District Addendum to the Milpitas General Plan 2040 FEIR (SCH #2020070348) and the Supplemental Letter to the Addendum. This recommendation is made for the City Council's consideration in the alternative to the Planning Commission's previous approval recommendation for approval on April 24, 2024, which the Planning Commission reaffirms and continues to also recommend.

PASSED AND ADOPTED at a regular meeting of the Planning Commission of the City of Milpitas on February 26, 2025.

Signed by:
Parveen Gupta
6D1BF35005EF45F...
Mar-04-2025

Parveen Gupta, Chair

TO WIT:

Docusign Envelope ID: CBF2C20F-5303-4A8A-B89A-337ED5371F11

I HEREBY CERTIFY that the following resolution was duly adopted at a regular meeting of the Planning Commission of the City of Milpitas on February 26, 2025, and carried by the following roll call vote:

COMMISSIONER	AYES	NOES	ABSENT	ABSTAIN
Alexander Galang				X
Chia Ling Kong				X
Dipak Awasthi			X	
Mercedes Albana	X			
Michael Caulkins	X			
Parveen Gupta	X			
Sonia Medina-Ashby	X			

Docusign Envelope ID: CBF2C20F-5303-4A8A-B89A-337ED5371F11

Exhibit "1" General Plan Amendment City Council Resolution No. XX-XXX

Docusign Envelope ID: CBF2C20F-5303-4A8A-B89A-337ED5371F11

Exhibit "2" Zoning Map and Text Amendment - Ordinance No. XX-XXX

Docusign Envelope ID: CBF2C20F-5303-4A8A-B89A-337ED5371F11

REGULAR

NUMBER: XX.XXX

TITLE: AN ORDINANCE OF THE CITY COUNCIL OF THE CITY OF MILPITAS AMENDING CHAPTER 10, SECTION 6 OF TITLE XI OF THE MILPITAS MUNICIPAL CODE RELATING TO THE ESTABLISHMENT OF THE NEIGHBORHOOD COMMERCIAL MIXED-USE (NCMU) ZONING DISTRICT AND TOWN CENTER (TC) SUBDISTRICTS AND AMENDING THE ZONING MAP DESIGNATION OF CERTAIN PARCELS WITHIN THE ZONING MAP

HISTORY: This Ordinance was introduced (first reading) by the City Council at its meeting of _____, upon motion by_____ and was adopted (second reading) by the City Council at its meeting of _____, upon motion by _____. The Ordinance was duly passed and ordered published in accordance with law by the following vote:

AYES:

NOES:

ABSENT:

ABSTAIN:

ATTEST:

_____
Suzanne Guzzetta, City Clerk

APPROVED:

_____
Carmen Montano, Mayor

APPROVED AS TO FORM:

_____
Christopher Creech, Acting City Attorney

Docusign Envelope ID: CBF2C20F-5303-4A8A-B89A-337ED5371F11

RECITALS AND FINDINGS:

WHEREAS, the City of Milpitas, California (the "City") is a municipal corporation, duly organized under the constitution and laws of the State of California; and

WHEREAS, California Government Code Section 65800 et seq. authorizes the adoption and administration of zoning laws, ordinances, rules and regulations by cities as a means of implementing the General Plan; and

WHEREAS, Section 3.03 of Chapter 10 Zoning of Title XI of the Milpitas Municipal Code, divides the City into zoning districts; and

WHEREAS, the City Council is the final authority on General Plan, Specific Plan, and Zoning amendments, including amendments to the Zoning Map; and

WHEREAS, the City wishes to amend the Zoning map and Zoning text to establish the Neighborhood Commercial Mixed-Use (NCMU-1,2,3) districts and subdistricts, update the existing Town Center (TC) districts to establish the subdistricts (TC-1,2,3) within the Zoning Text and Zoning Map, which has been initiated by this Ordinance; and

WHEREAS, on February 26, 2025, the Planning Commission held a duly-noticed public hearing on the subject application, and considered evidence presented by City staff, the applicant, and other interested parties and recommended the City Council approve the proposed amendments; and

WHEREAS, per Milpitas Municipal Code § XI-10-57.02(G)(3), the City Council likewise finds that the Zoning Code Amendment set forth herein will not adversely affect the public health, safety and welfare, in that the Project will not adversely affect the public health, safety and welfare. Additionally, an Addendum to the Milpitas General Plan Update Final EIR (March 2021, SCH #2020070348) was prepared pursuant to CEQA Guidelines Sections 15162 and 15164, to evaluate whether the Project's environmental impacts are covered by and within the scope of the Milpitas General Plan FEIR. The Addendum Evaluation details any changes in the project, changes in circumstances under which the Project is undertaken, and/or "new information of substantial importance" that may cause one or more effects to environmental resources. The Addendum substantiates and supports the City's determination that the HOD changes are within the scope of the General Plan EIR, do not require subsequent action under CEQA Guidelines Section 15162, and adequately analyze potential environmental impacts in conjunction with the EIR; and

WHEREAS, a Supplemental Letter to the Addendum was prepared in response to the Project revisions and found that the proposed the proposed changes are consistent with the overall land use and growth projections assumed within the General Plan EIR, which already accounted for and mitigated potential environmental impacts; and

WHEREAS, since the environmental conditions have not changed since the April 2024 Addendum, the baseline conditions for analyzing impacts remain the same. Consequently, the reduced buildout further supports the conclusion that the impacts would be less significant, and the conclusions of the Addendum remain valid; and

WHEREAS, on _____, the City Council held a duly-noticed public hearing on the proposed action, and considered evidence presented by City staff and other interested parties; and

Docusign Envelope ID: CBF2C20F-5303-4A8A-B89A-337ED5371F11

WHEREAS, the City Council finds that with the approval (by separate resolution) of General Plan Map and Text Amendment No. GP24-0001, Zoning Text, and Map Amendment No. ZA24-0001 and, the Zoning Code and the General Plan will be internally consistent; and

WHEREAS, prior to taking action on this Ordinance, the City Council has taken separate action to adopt the Housing Opportunity District Addendum to the Milpitas General Plan 2040 EIR (SCH #2020070348) and the Supplement Letter to the Addendum and impose it as a condition of project approval; and

WHEREAS, these amendments represent a comprehensive approach to addressing housing challenges while promoting sustainable and vibrant mixed-use neighborhoods in Milpitas. The Project as a pivotal strategy in addressing Milpitas' housing needs while revitalizing our commercial centers. The project aligns with the City's General Plan and Housing Element overall, emphasizing the importance of balanced land uses that meet the needs of our residents and businesses.

NOW, THEREFORE, the City Council of the City of Milpitas does ordain as follows:

SECTION 1. RECORD AND BASIS FOR ACTION

The City Council has duly considered the full record before it, which may include but is not limited to such things as the City staff report, testimony by staff and the public, and other materials and evidence submitted or provided to the City Council. Furthermore, the recitals set forth above are found to be true and correct and are incorporated herein by reference.

SECTION 2. ZONING MAP AMENDMENT FINDINGS (XI-10-57.02)

The City Council makes the following findings based on the evidence in the public record in support of Zoning Amendment No. ZA24-0001:

a. *The proposed amendment is consistent with the General Plan.*

The proposed text amendments are consistent with General Plan Policy LU 6-6, which states to encourage redevelopment and intensification of mixed-use areas by allowing standalone vertical mixed-use, or integrated horizontal mixed-use projects in mixed use areas, consistent with the Land Use Map and policies and actions included in this element. The proposed zoning adopts a place-based and flexible approach by establishing three distinct NCMU zones (NCMU1, NCMU2, and NCMU3) and three TC zones (TC1, TC2, and TC3). These zones consider factors such as parcel size, location, current use, and future potential. Each zone permits increased residential density and a reduced minimum non-residential FAR, promoting versatility in development. The Housing Element supports this change with Policy HE 3.7: support the adaptive reuse, renovation, conversion, or redevelopment of economically underutilized properties or buildings for residential or mixed-use development. This is further supported by the General Plan's proposed text updates associated with this Project to ensure consistency between the Zoning Text and the General Plan. The Project is specifically consistent with General Plan Policy LU 6-5, which states to promote reinvestment in strip commercial and shopping centers and maintain, revitalize, and redevelop aging and underperforming centers. The proposed map amendments are consistent with the text amendments and the General Plan because the proposed map changes to the identified parcels, zoned Town Center (TC) and Neighborhood Commercial Mixed Use (NCMU), are also implementing the existing General Plan land use designations. Furthermore, the proposed amendments introduce specific development standards related to permitted uses, parking, and

Docusign Envelope ID: CBF2C20F-5303-4A8A-B89A-337ED5371F11

open space, which are intended to implement the General Plan vision for the NCMU and TWC designations.

b. The proposed amendment will not adversely affect the public health, safety and welfare.

The proposed text and map amendment are found to have no adverse effects on the public health, safety, and welfare. The amendments are designed to enhance the efficiency and effectiveness of the City's zoning regulations, ensuring that they remain current and responsive to changing community needs. The amendments have been carefully reviewed and analyzed to assess their potential impacts on public health, safety, and welfare. This analysis has been done through a place-based approach sensitive to the needs and circumstances of the areas that will be rezoned. These areas have been selected as being capable of supporting this development, and development standards have been selected that are specific to this area and its circumstances. As confirmed by the Addendum to the Milpitas General Plan Update Final EIR and the Supplemental Letter to the Addendum, traffic, environmental impacts, access to essential services, and community well-being will not be impacted in a manner that would significantly affect public health, safety, and welfare. Also, the City retains authority through discretionary approvals to address project-specific health, safety, and welfare concerns.

SECTION 3. AMENDMENT OF MILPITAS MUNICIPAL CODE TITLE XI, CHAPTER 10, SECTION 6.0

Title XI, Chapter 10, Section 6 Mixed Use Zones and Standards is hereby amended to read as follows:

Section 6 Mixed Use Zones and Standards

XI-10-6.01 Purpose and Intent

A. Mixed Use ("MXD") Zoning District. The purpose of the MXD zoning district is to encourage a compatible mix of residential, retail, entertainment, office and commercial service uses within the framework of a pedestrian-oriented streetscape. It is intended that the residential and commercial use allowed in the "MXD" District combine to provide for an "around-the-clock-environment" with urban open areas (i.e. plazas, squares) that serve multiple purposes and can be used for special events.

B. High Density Mixed Use ("MXD2") Zoning District. The purpose of the MXD2 zoning district is to encourage a mix of retail, restaurant, entertainment, and commercial service uses on the ground floor with residential or office uses on the floors above while maintaining a pedestrian-oriented streetscape. It is intended that the retail or restaurant space required will ensure neighborhood-oriented retail and services are provided within walking distance of high density residential development.

C. Very High Density Mixed Use ("MXD3") Zoning District. The purpose of the MXD3 zoning district is to provide very-high density housing, retail and employment uses.

D. Neighborhood Commercial Mixed Use ("NCMU") Zoning District. The purpose of the NCMU zoning district is to encourage a compatible mix of residential, retail, entertainment, office, and commercial uses. It is intended that the neighborhood-serving active uses such as grocery stores, retail, restaurants, and personal services at key locations on the ground level will help create a

Docusign Envelope ID: CBF2C20F-5303-4A8A-B89A-337ED5371F11

pedestrian oriented streetscape and public spaces. The NCMU Zoning District is subdivided into three subdistricts:

1. NCMU1 allows commercial or mixed-use development the primary function as a commercial center to provide goods and services to the immediate neighborhood. The mix of uses may be vertical or horizontal.

2. NCMU2 allows commercial or mixed-use development with some active commercial storefronts along the street frontages.

3. NCMU3 allows commercial, mixed use, or residential only development with no minimum commercial FAR. NCMU3 includes parcels that are less suitable for commercial use, such as those located on secondary streets, lacking street frontages, or adjacent to residential zones.

E. Town Center (TC) Zone. The purpose and intent of this zone is to provide for an area that supports a wide range of administrative, business, entertainment, dining, and cultural activities along with some residential uses in the geographic center of the City to suit the varying lifestyles of residents and visitors alike. The area is easily accessible via the City's transportation network. The TC Zoning District is subdivided into three subdistricts:

1. TC1 allows commercial or mixed-use development with the primary function as a commercial center to provide goods and services to the immediate neighborhood and larger community. The mix of uses may be vertical or horizontal.

2. TC2 allows commercial or mixed-use development with active commercial storefronts along the street frontages.

3. TC3 allows commercial, mixed-use or residential only development with no minimum commercial FAR. TC 3 includes parcels that are less suitable for retail uses, such as those located on secondary streets, lacking street frontages, or adjacent to residential zones.

XI-10-6.02 Mixed Use Regulations

A. Permitted and Conditionally Permitted Uses.

1. Primary uses. The uses identified in Table 6.02-1, Mixed Use Zone Uses, shall be the primary uses allowed to occur on a property. All uses except for those noted shall be conducted within enclosed structures. The primary uses identified in Table 6.02-1 shall be permitted or conditionally permitted, as indicated:

P	Where the symbol "P" appears, the use shall be permitted.
MCS	Where the symbol "MCS" appears, the use shall be permitted subject to the issuance of a Minor Conditional Use Permit by staff, in accordance with Section 57.04, Conditional Use Permits and Minor Conditional Use Permits, of this chapter.
P/C	Where the symbol "P/C" appears the use may be permitted if certain criteria is met or otherwise a Conditional Use Permit shall be required, in accordance with Section XI-10-57.04, Conditional Use Permits, of this Chapter.
C	Where the symbol "C" appears, the use shall be permitted subject to the issuance of a Conditional Use Permit, in accordance with Section 57.04, Conditional Use Permits and Minor Conditional Use Permits, of this chapter.
MC	Where the symbol "MC" appears, the use shall be permitted subject to the issuance of a Minor Conditional Use Permit, in accordance with Section 57.04, Conditional Use Permits and Minor Conditional Use Permits, of this chapter.

Docusign Envelope ID: CBF2C20F-5303-4A8A-B89A-337ED5371F11

O	Where the symbol "O" appears, the use is subject to an alternative review process described in a subsequent footnote.

2. Accessory Uses.

a. Massage Services. Massage services may be allowed as an accessory use to any permitted or conditionally permitted medical office, medical clinic, chiropractor practice, acupuncture practice, physical therapist, fitness and athletic facility, health care facility (such as hospitals, nursing homes and sanitariums), and accredited school, college, and university. Massage services, limited to massage of the head, neck, shoulders, hands and feet may be allowed as an accessory use to any permitted or conditionally permitted beauty salon, barbershop, and healing art practices. This section shall not exempt any person or business from complying with all the provisions of Title III, Chapter 6.

B. Prohibited Uses. The following uses are prohibited:

1. Uses where the symbol "NP" appears within Table 6.02-1.

2. The following uses are not permitted in any mixed use zone:

a. Adult Businesses as defined in Subsection 13.04, Adult Businesses, of this Chapter.

b. Disinfecting and extermination business.

c. Ground level residential in the Ground Level Commercial Area as shown on the Midtown Specific Plan Land Use Map, Figure 3.1 and Zoning Map.

d. Outdoor storage of vehicles.

e. Private self-storage facilities

f. Single family detached dwellings

g. Two family dwelling units

C. Other Uses. Any other uses may be considered by the Planning Commission that are similar in accordance with the procedure, prescribed in Subsection 10-54.02, Other Uses Permitted by Commission, of this Chapter.

Table XI-10-6.02-1
Mixed Use Zone Uses

Use	MXD	MXD2		MXD3	NCMU1,2,3	TC1,2,3
		Ground Level (Facing Retail street)	Upper Floor			
1. Commercial Uses						
Alcohol beverage sales	C	C	C	C	C	C
Business support services[1]	P/NP[2]	P/NP[2]	NP	P/NP[2]	P/NP[2]	MC
Grocery stores (supermarkets)[3]	C	C	C	C	P	P
Pawnshops[4]	C	C	C	C	NP	NP
Personal services[1, 5]	P	P	P	P	P	P

Docusign Envelope ID: CBF2C20F-5303-4A8A-B89A-337ED5371F11

Pet shops	C	NP	NP	NP	NP	P
Repair and cleaning shop, small items[1]	P	P	P	MC	MC	P
Retail stores, general merchandise[6]	P	P	MCS	MCS	P	P
Thrift shops (used merchandise)						
Retail	P	P	P	P	P	P
With collections	C	C	C	C	C	NP
Drive Through Uses	NP	NP	NP	NP	NP	C
2. Entertainment and Recreation						
Commercial athletic facilities	P	P	P	P	MCS in NCMU1	P
"Theaters (Indoor)"						
Recreation or entertainment facility	C	C	C	C	NP	C
3. Health and Veterinarian Uses						
Animal grooming (no boarding)	P	P	NP	P	NP	P
Hospitals or sanitariums[7]	C	C	C	C	NP	C
Massage establishment [8]	MC	MC	MC	MC	MC	MC
Massage establishment, accessory [8]	MCS	MCS	MCS	MCS	MCS	MCS
Medical or dental offices and clinics	P	NP	P	P	P (upper floors) MCS (ground floor)	P
Medical support laboratories	P	P	P	P	NP	C
Optician and optometrist shop	P	P	P	P	P (upper floors) MCS (ground floor)	P
Pharmacy or drug store	P	P	P	P	P	P
Veterinarian clinic	P	P	P	P	NP	P
4. Lodging						
Bed and breakfast	P	P	NP	NP	NP	NP
Boarding houses (3 or more persons)	C	C	C	C	C	C
Group dwellings	C	C	C	C	C	C
Hotels	C	P	P	P	C	P
Motels	C	C	C	C	NP	NP
5. Professional Offices, Financial Institutions and Related Uses						
Financial institutions (banks, savings and loans, etc.)	MCS	NP	MCS	P	P	P
Offices, business and professional[6]	MCS	NP	MCS	P	C	P
6. Public/Quasi Public and Assembly Uses						
Child care						

Docusign Envelope ID: CBF2C20F-5303-4A8A-B89A-337ED5371F11

Child care center	C	P	C	P	C	C
Day care school	C	C	C	C	C	C
Large family child care home	P	P	C	P	P	P
Small family child care home	P	P	P	P	P	P
Instruction						
Group[6]	P	NP	NP	NP	P	P
Private	P	P	P	P	P	P
Park, playground or community center[10]	O	O	O	O	O	O
Places of assembly[7]	C	C	C	C	C	C
Public utilities	C	C	C	C	C	C
Schools, private (elementary, middle and high)[5]	C	C	C	C	C	C
Theaters (Indoor)	C	C	C	C	NP	C
Trade and vocational schools[7]	C	C	C	C	NP	C
Transportation facilities[4]	C	C	C	C	NP	C
7. Residential Uses						
Multi-family housing[11]	P	NP[12]	P	P	P[12]	P
Transitional and supportive housing[11]	P	NP[12]	P	P	P[12]	P
Accessory Dwelling Unit[14]	P	NP	P	P	P	P
8. Restaurants or Food Service						
Bar or nightclub	C[15]	C[15]	C	C[15]	C[15]	C
Brewery/Eateries	MCS	MCS	NP	MCS	MCS	MCS
Catering establishments	C	C	C	C	NP	P
Restaurants[4]	P/C	P/C	NP	P/C	P/C	P
With music (indoor/outdoor)	P[15]	P[15]	NP	P[15]	P[15]	P
With other live entertainment/dancing	C	C	NP	C	C	C
Mobile Food Vending (individual vehicle)[16]	P	P	NP	P	P	P
Mobile Food Park[16]	MC	NP	NP	MC	NP	MC
Commissary	MC	NP	NP	MC	NP	MC
9. Unclassified Uses						
Artisan Studios & Live-work units, woodworking or glassworking, plumbing or metalworking and sign shops[4]	MCS	MCS	MCS	MCS	MCS	MCS
Lobbies and entries for upper floor uses	P	P	NP	P	P	P
Model home complex[17]	P	P	P	P	P	P
Mixed use developments[18]	P	P	P	P	P	P
Planned Unit Development[19]	P	P	P	P	P	P
Temporary seasonal sales[20]	P	P	P	P	P	P
Short-Term Rentals[21]	P	NP	P	P	P	P
10. Vehicle-Related Repair, Sales and Services						
Auto sales and rental[22]	C	C	C	C	NP	NP

Docusign Envelope ID: CBF2C20F-5303-4A8A-B89A-337ED5371F11

Auto broker (wholesale, no vehicles on site)[4]	MCS	MCS	MCS	MCS	NP	MCS
Vehicle service uses[23]	C	NP	NP	C	NP	C

[1] Refer to Subsection XI-10-6.02-1(B), Performance standards for certain uses, of this Chapter, for standards.

[2] Copy/quick-printing shops and mailbox rental facilities shall be permitted in all MXD, MXD2 (Ground Floor), MXD3, and all NCMU zones. All other uses classified as Business Support Services shall not be permitted in these zones.

[3] Grocery stores with floor area up to 15,000 square feet are permitted. Grocery stores exceeding 15,000 square feet may be permitted subject to the approval of a Conditional Use Permit pursuant to Subsection XI-10-57.04 of this Chapter.

[4] Refer to Subsection XI-10-6.02-1, Special Uses, of this Chapter, for standards.

[5]When located on the ground floor, retail sales of products related to the Personal Services provided shall be offered at the front of the premises near the pedestrian entrance and shall comprise at least 10 percent of the floor area of the business establishment.

[6] Refer to Subsection XI-10-6.02-1(B) Performance standards for certain uses, of this Chapter.

[7] Refer to Subsection XI-10-6.02-2, Quasi-Public Uses, of this Chapter, for standards.

[8]Massage establishments are subject to Title III, Chapter 6 of the Milpitas Municipal Code and Subsection XI-10-13.16 of this title. Refer to Subsection XI-10-13.16, of this Title, for special provisions for massage establishments.

[9] Reserved

[10] For parks, playgrounds or community center owned and operated by a government agency or a nonprofit community organization.

[11] Ground level residential is prohibited in the Ground Level Commercial Area as shown on the Midtown Specific Plan Land Use Map, Figure 3.1.

[12] Uses serving upper-floor residential uses, such as common gathering space, lobby, and resident services, may be allowed as ground floor uses where residential uses would otherwise not be permitted.

[14]Only allowed within multi-family dwellings, subject to the requirements of Subsection XI-10-13.08, Accessory Dwelling Units, of this Chapter.

[15] Indoor or outdoor music is permitted as an accessory use on the same parcel in conjunction with a restaurant or bar that is a principal permitted use or approved conditional use in the MXD, MXD2, MXD3, and NCMU zones. See also Subsection XI-10-6.06(B) for additional regulations.

[16]Refer to Subsection XI-10-13.18, Mobile Food Vending, of this Chapter.

[17]Refer to Subsection XI-10-13.11(E), Model Home Complexes and Sales Offices, of this Chapter for temporary tract offices.

[18]Which include only permitted uses.

[19]Refer to Section XI-10-54.07, Planned Unit Developments, of this Chapter, for standards.

[20]Refer to Section XI-10-13.11(D), Temporary Seasonal Sales, of this Chapter.

Docusign Envelope ID: CBF2C20F-5303-4A8A-B89A-337ED5371F11

[21]Only allowed within a dwelling unit, subject to the requirements of Subsection XI-10-13.17, Short-Term Rentals, of this Chapter.

[22]New and used auto, recreational vehicle and boat sales, excluding commercial vehicles, trucks, buses, vans, and farm equipment, with accessory repairs and services, only allowed if fully enclosed within a building. Bicycle and auto rental agency, excluding commercial vehicles, trucks, buses, vans, boats and RV rentals, only if fully enclosed within a building.

[23]Refer to Subsection XI-10-6.02-2, Special Uses, of this Chapter, for standards. Service stations shall follow the "General development policy: Gasoline service stations, and automotive service centers" adopted by the City Council on December 19, 1995.

6.02-1 Mixed Use Zone Special Uses

A. Special Uses within all MXD zones. Certain uses noted in Table 6.02-1, Mixed Use Zone Uses may be allowed through the approval of a Conditional Use Permit and Minor Conditional Use Permits, in accordance with Subsection 57.04, Conditional Use Permits, of this Chapter, if they are not located within one thousand (1,000) feet of another same use listed below. This distance shall be measured from the property line of the parcel where such use is located.

   1. Auto service uses, including but not limited to: gasoline service stations, car washes, tire shops, towing without vehicle storage and auto repair shops of all kinds, radiators, paint, body, glass, brakes, upholstery, and other similar types.

   2. Local transportation service facilities (e.g. taxi, parcel service, ambulance, armored car, and van storage) without outdoor storage of vehicles.

   3. Pawnshops.

B. Performance Standards for Certain Uses. For uses requiring approval of a Minor Conditional Use Permit by staff, in accordance with Section XI-10-57.04, Conditional Use Permits and Minor Conditional Use Permits, of this Chapter, the following performance standards below shall be met.

   1. Auto Brokers. Auto Brokers may be permitted by right if the following standards are met:

      a. Local Sales and Use Tax. In order to assist the City of Milpitas in its efforts to receive direct distribution of the local tax on materials associated with the project, the California Sales and Use Tax (the "Local Tax") shall be allocated to the project site, to the extent reasonably possible. Evidence of tax allocation or cause as to why such allocation cannot be made shall be submitted at the time of business license submittal.

   2. Auto Service Uses. Auto Service uses shall comply with the following standards:

      a. All operations shall be conducted completely within an enclosed building.

      b. Entrances to the service bays shall not be open to the street but shall be designed to face the rear or interior side property line.

   3. Artisans, Plumbing, Metalworking, Sign Shops and Woodworking or glass working shops. These uses shall comply with the following standards:

      a. All operations shall be conducted completely within an enclosed building.

      b. There shall be no dust, fume, or odor either emitted from the premise.

      c. The operations shall not create excessive vibrations.

Docusign Envelope ID: CBF2C20F-5303-4A8A-B89A-337ED5371F11

d. The operations shall be consistent with the City's noise standards.

e. Plumbing, metalworking, sign shops, woodworking or glass working shops shall not be closer than 1,000 feet of another same use measured from the property line.

4. Personal Services, Business Support Services, and Repair and Cleaning-Small Items uses shall comply with the following:

a. When located within the MXD zone:

i. Located in the area designated for ground floor retail and are less than or equal to ten thousand (10,000) square feet in gross floor area;

ii. Located in the areas not designated for ground floor retail and are less than or equal to fifty thousand (50,000) square feet in gross floor area.

b. When located within the MXD2 and MXD3 zones they are less than or equal to fifty thousand (50,000) square feet in gross floor area;

c. They are not open past 10:00 p.m.;

d. They are not specifically noted in Table 6.02-1, Mixed Use Zone Uses, of this chapter, requiring Conditional Use Permit approval or listed as a prohibited use;

e. They are not listed as a prohibited use in Section 10-6.02 (B), Prohibited Uses, of this Chapter.

If items a through c above are not met, then approval of a Conditional Use Permit is required in accordance with Subsection 57.04, Conditional Use Permits and Minor Conditional Use Permits, of this Chapter. Exceptions to the requirement for a Conditional Use Permit for such uses may be granted at the discretion of the Planning Director on a case-by-case basis, based upon a review of site-specific conditions.

5. Group Instruction uses shall comply with the following standards:

a. No loitering shall be permitted before or after any classes or sessions.

6. Restaurants may be permitted provided:

a. They have only ancillary on-premise consumption of beer and wine associated with food sales;

b. They have no separate bar area;

c. When located within the MXD2 and MXD3 zones they are located on the ground floor facing a public street designated as a retail mixed use street; and

d. They conform to the performance standards listed in this subsection (e) below.

If items (a) through (c) above are not met, then approval of a Conditional Use Permit is required in accordance with Section 57, of this Chapter.

e. Restaurant Performance Standards. Restaurants shall comply with the following performance standards:

i. Seating shall not exceed that which the amount of parking allocated for the restaurant space would allow. A sign measuring at least one (1) foot by one (1) foot, with a lettering height of at least three (3) inches, shall be placed in a conspicuous

Docusign Envelope ID: CBF2C20F-5303-4A8A-B89A-337ED5371F11

location near the restaurant front entrance stating the maximum total seating allowed. Outdoor seating is allowed if it has been approved as part of the facility's Minor Site Development Permit or Site Development Permit and is operated in conformance with any conditions of that approval.

ii. The restaurant shall comply with the City Council's Guidelines for Recycling Enclosures (Resolution No. 6296).

iii. The restaurant shall incorporate measures to reduce odors to acceptable levels, including, but not limited to, installation of a scrubber, carbon filter or similar equipment, on the roof vent to control odors.

iv. All the facility's floor drains, trash compactors and indoor mat and equipment washing areas shall be drained to the sanitary sewer.

v. Where applicable, the restaurant shall maintain an active account with a tallow hauling company.

vi. The restaurant shall prepare and implement a program assigning restaurant staff responsibility for complying with the following guidelines which shall be adhered to while the restaurant is in operation:

1) Wash all containers and equipment in the kitchen areas so that wash water may drain into the sanitary sewer.

2) Keep garbage dumpsters clean inside and out; replace very dirty dumpsters with new, clean ones.

3) Double bag waste to prevent leaking.

4) Place, do not drop or throw, waste-filled bags, to prevent leaking.

5) Keep the ground under and around the garbage dumpsters swept.

6) Sprinkle the ground lightly after sweeping with a mixture of water and a little bleach.

7) Hold training sessions to instruct employees on the proper procedures in the handling and disposal of food items; the general maintenance and use of the compactor and any other procedures that would assist the business in complying with all State and local health and sanitation standards. A record of such training must be kept to prove compliance with this requirement.

8) Post signs (in English and multi-lingual) inside the premises for all employees identifying procedures for food delivery and garbage disposal.

9) All garbage bins shall be stored in the garbage enclosure except for the twelve (12) hours immediately before and after garbage collection.

7. Retail and Offices shall comply with the following:

a. When located within the MXD zone:

i. Located in the area designated for ground floor retail and are less than or equal to ten thousand (10,000) square feet in gross floor area;

Docusign Envelope ID: CBF2C20F-5303-4A8A-B89A-337ED5371F11

ii. Located in the areas not designated for ground floor retail and are less than or equal to fifty thousand (50,000) square feet in gross floor area.

b. When located within the MXD2 and MXD3 zones they are less than or equal to fifty thousand (50,000) square feet in gross floor area; d. They are not open past 10:00 p.m.;

e. They are not specifically noted in Table 6.02-1, Mixed Use Zone Uses, of this Chapter, requiring Conditional Use Permit approval or listed as a prohibited use; and

f. They are not listed as a prohibited use in Section 10-6.02 (B), Prohibited Uses, of this Chapter.

If items a through c above are not met, then approval of a Conditional Use Permit is required in accordance with Section 57, Conditional Use Permits and Minor Conditional Use Permits, of this Chapter.

C. Mixed Use and Residential-Only Development Projects in the NCMU and TC zones.

1. Mixed use developments in the NCMU and TC zones shall provide commercial or active spaces designed to accommodate neighborhood-serving commercial uses at the ground level, and may include residential units. A proposed project in NCMU1, NCMU2, TC1, and TC2 shall include a minimum non-residential component in full compliance with the requirements of its zoning district as defined in section 11-10-6.04 Mixed Use Zone General Development Standards.

2. 100% affordable developments in NCMU1, NCMU2, TC1, and TC2 are exempt from the minimum non-residential requirement.

a. 100 percent of the residential units must be affordable to low-income (earning up to 80 percent of area median income) and/or very low income (earning up to 50 percent of area median income) households, as defined by the U.S. Department of Housing and Urban Development.

b. Affordability requirements shall be administered through a deed restriction, such as a restrictive covenant or other legally enforceable recorded instrument, for a minimum term of 55 years.

6.02-2 Quasi-Public Uses within MXD, NCMU, and TC Zones

A. Churches and religious institutions are permitted in any location within the MXD, NCMU, and TC Zones.

B. The following quasi-public uses may be permitted within the MXD zones provided their location is first approved by the Planning Commission, in accordance with Subsection 57.04, Conditional Use Permits and Minor Conditional Use Permits, of this Chapter, and they are not located within 1,000 feet of the parcel boundary of another quasi-public use listed below. This distance shall be measured from the property line of the parcel where such use is located.

1. Places of meeting or assembly, such as auditoriums, banquet halls, and fraternal or union halls.
2. Hospitals or sanitariums.

3. Private elementary, middle or high schools.

Docusign Envelope ID: CBF2C20F-5303-4A8A-B89A-337ED5371F11

4. Vocational schools, if not found objectionable due to noise, odor, vibration or other similar health, safety and welfare basis.

XI-10-6.03 Affordable Housing

Affordable housing units should be provided in all new housing projects. Except as provided in Subsection XI-10-6.02-1(C)(2), while twenty percent (20%) is the minimum goal, affordable unit requirements will be determined on a project by project basis, taking into consideration the size and location of the project, the type of housing unit, proximity to transit and the mix of affordable units in the vicinity.

XI-10-6.04 Mixed Use Zone General Development Standards

A. Standards within Specific Plan Areas. For properties located within a Specific Plan, refer to the Specific Plan for development standards. When a standard is not listed within the Specific Plan, the standards listed within the zoning ordinance shall govern.

B. General Standards. The following minimum requirements shall be observed. The minimum requirement shall be one of the following for the district classification as designated on the zoning map.

Table XI-10-6.04-1
Mixed Use Zone Development Standards

Standards	MXD	MXD2	MXD3
Non-residential lot area minimum	Individual sites shall be of such size that all space requirements provided in this section are satisfied.	Individual sites shall be of such size that all space requirements provided in this section are satisfied.	Individual sites shall be of such size that all space requirements provided in this section are satisfied.
Density, Minimum-Maximum Residential (Dwellings)[1]	21 min. 30 max. per gross acre. For additional standards refer to Section 6.04(C), Multi-Family Residential Density within the MXD, MXD2 and MXD3 zones	31 min. 40 max. per gross acre. For additional standards refer to Section 6.04(C), Multi-Family Residential Density within the MXD, MXD2 and MXD3 zones.	41 min. 60 max. per gross. For additional standards refer to Section 6.04(C), Multi-Family Residential Density within the MXD, MXD2 and MXD3 zones.
Front and Street-Side Yard Setback, Minimum	Refer to Section 6.04(D), Front and Street-Side Yard Setbacks.	Refer to Section 6.04(D), Front and Street-Side Yard Setbacks.	12 ft. min. 20 ft. max. For additional standards refer to Section 6.04(D), Front and Street-Side Yard Setbacks, of this chapter.
Interior-Side Yard Setback, Minimum[2]	Ground Level Commercial Area: 0 ft. All other areas: 10 ft.	0 ft. Except when abutting residential use and for portions of buildings over 60 ft. or four stories tall, where the interior side yards shall be a minimum of 10 ft.	10 ft. 15 ft. when abutting residential. 20 ft. for portions of buildings over 60 ft. or four stories tall.

Docusign Envelope ID: CBF2C20F-5303-4A8A-B89A-337ED5371F11

Rear Yard Setback, Minimum[3]	10 ft.	10 ft. 15 ft. when abutting residential 20 ft. for portions of buildings over 60 ft. or four stories tall.	15 ft. 20 ft. when abutting residential 30 ft. for portions of buildings over 60 ft. or four stories tall.
Floor Area Ratio, Non-Residential and Mixed Use projects	For buildings and portions thereof: .75 max.	1.5 max. Refer to Section 6.04(E), Floor Area Ratio, Non-Residential.	2.0 max. Refer to Section 6.04(E), Floor Area Ratio, Non-Residential.
Commercial Area, Minimum	Not Applicable	200 sq. ft. of retail, restaurant, or pedestrian-oriented commercial service uses, allowed in Table 6-02-1, Mixed Use Zone Uses, must be provided for every unit, using the minimum density.	Not Applicable
Building Height[4]	Principal building: 3 stories and 45 ft.	Principal building: 6 stories or 75 ft. Principal buildings with frontage along Great Mall Parkway: 12 Stories or 150 ft. Greater height, up to 20 stories may be allowed through the approval of a Conditional Use Permit.	Principal buildings: 12 stories or 150 ft. Greater height, up to 20 stories may be allowed through the approval of a Conditional Use Permit.
Landscaping	Refer to Section 6.04(G), Landscaping.	Refer to Section 6.04(G), Landscaping.	Refer to Section 6.04(G), Landscaping.
Parking	Refer to Section 53, Off Street Parking Regulations, of this Chapter.	Refer to Section 53, Off Street Parking Regulations, of this Chapter.	Refer to Section 53, Off Street Parking Regulations, of this Chapter.

[1] For MXD3 properties, density may be averaged over contiguous parcels.

[2] To mitigate the effects of adjacent service commercial or light industrial uses, increased setbacks and other measures, such as solid six-foot fence or masonry wall, shall be considered on a case by case basis by the Planning Commission during the Site Development Permit process, taking into consideration the nature of adjacent uses.

[3] See Note 2 above.

[4] Within the MXD zone, special architectural features, such as towers or corner elements may be up to 55 ft.

Table XI-10-6.04-2
NCMU Zone Development Standards

Docusign Envelope ID: CBF2C20F-5303-4A8A-B89A-337ED5371F11

Standards	NCMU1	NCMU2	NCMU3
Lot area minimum	None	None	None
Density, Minimum-Maximum Residential (Dwellings)[1]	Maximum: 60 du/ac	Maximum: 60 du/ac	Minimum: 30 du/ac Maximum: 60 du/ac
Front and Street-Side Yard Setback, Minimum	10' Residential 0' Commercial	10' Residential 0' Commercial	10' Residential 0' Commercial
Interior-Side Yard Setback, Minimum[2]	For residential only and mixed-use developments: 10 ft. For all other non-residential developments: None required On lots abutting a single-family residential zone: 25 ft.	For residential only and mixed-use developments: 10 ft. For all other non-residential developments: None required On lots abutting a single-family residential zone: 25 ft.	For residential only and mixed-use developments: 10 ft. For all other non-residential developments: None required On lots abutting a single-family residential zone: 25 ft.
Rear Yard Setback, Minimum[3]	For residential only and mixed-use developments: 10 ft. For all other non-residential developments: None required On lots abutting a single-family residential zone: 25 ft.	For residential only and mixed-use developments: 10 ft. For all other non-residential developments: None required On lots abutting a single-family residential zone: 25 ft.	For residential only and mixed-use developments: 10 ft. For all other non-residential developments: None required On lots abutting a single-family residential zone: 25 ft.
Floor Area Ratio, Non-Residential and Mixed Use projects	No min. for commercial only project. 0.20 min. commercial for mixed use projects. Minimum FAR may be calculated or distributed throughout a development and across multiple adjoining parcels. 0.50 max. Maximum FAR does not apply to hotels.	No min. for commercial only project. 0.10 min. commercial for first 100 feet of parcel depth fronting a public street for mixed-use projects. Note: Minimum commercial FAR may be calculated or distributed throughout a development and across multiple adjoining parcels and is not required to be located	No min. commercial FAR 0.50 max. Maximum FAR does not apply to hotels.

Docusign Envelope ID: CBF2C20F-5303-4A8A-B89A-337ED5371F11

		within the first 100 feet of parcel depth. 0.50 max. Maximum FAR does not apply to hotels.	
Building Height	60’ and 5 stories	60’ or 5 stories	60’ or 5 stories
Landscaping	Refer to Section 6.04(G), Landscaping.	Refer to Section 6.04(G), Landscaping.	Refer to Section 6.04(G), Landscaping.
Parking	Refer to Section 6.04 (H) Parking.	Refer to Section 6.04 (H) Parking.	Refer to Section 6.04 (H) Parking.

[1] For NCMU3 properties, density may be averaged over contiguous parcels.

[2] To mitigate the effects of adjacent service commercial or light industrial uses, increased setbacks and other measures, such as solid six-foot fence or masonry wall, shall be considered on a case by case basis by the Planning Commission during the Site Development Permit process, taking into consideration the nature of adjacent uses.

[3] See Note 2 above.

Table XI-10-6.04-3
TC Zone Development Standards

Standards	TC1	TC2	TC3
Lot area minimum	None	None	None
Density, Minimum-Maximum Residential (Dwellings)[1]	Maximum: 65 du/ac	Maximum: 65 du/ac	Minimum: 30 du/ac Maximum: 65 du/ac
Front and Street-Side Yard Setback, Minimum	For ground floor non-residential use: 15 ft. For ground floor residential use: 20 ft. For developments along E. Calaveras Blvd. 35 ft.	For ground floor non-residential use: 15 ft. For ground floor residential use: 20 ft. For developments along E. Calaveras Blvd. 35 ft.	For ground floor non-residential use: 15 ft. For ground floor residential use: 20 ft. For developments along E. Calaveras Blvd. 35 ft.
Interior-Side Yard Setback, Minimum[2]	For residential only and mixed-use developments: 10 ft. For all other non-residential developments: None required On lots abutting a single-family residential zone: 15 ft.	For residential only and mixed-use developments: 10 ft. For all other non-residential developments: None required On lots abutting a single-family residential zone: 15 ft.	For residential only and mixed-use developments: 10 ft. For all other non-residential developments: None required On lots abutting a single-family residential zone: 15 ft.

Docusign Envelope ID: CBF2C20F-5303-4A8A-B89A-337ED5371F11

Rear Yard Setback, Minimum[3]	For residential only and mixed-use developments: 10 ft. For all other non-residential developments: None required On lots abutting a single-family residential zone: 15 ft.	For residential only and mixed-use developments: 10 ft. For all other non-residential developments: None required On lots abutting a single-family residential zone: 15 ft.	For residential only and mixed-use developments: 10 ft. For all other non-residential developments: None required On lots abutting a single-family residential zone: 15 ft.
Floor Area Ratio, Non-Residential and Mixed Use projects	No min. for commercial only project. 0.35 min. commercial for mixed use projects. Minimum commercial FAR may be calculated or distributed throughout a development and across multiple adjoining parcels. 0.85 max. Maximum FAR does not apply to hotels.	No min. for commercial only project. 0.10 min.commercial for first 100 feet of parcel depth fronting a public street. Note: Minimum commercial FAR may be calculated or distributed throughout a development and across multiple adjoining parcels and is not required to be located within first 100 feet of parcel depth 0.85 max. Maximum FAR does not apply to hotels.	No min. commercial FAR 0.85 max. Maximum FAR does not apply to hotels.
Building Height	75’ and 6 stories	75’ and 6 stories	75’ and 6 stories
Landscaping	Refer to Section 6.04(G), Landscaping.	Refer to Section 6.04(G), Landscaping.	Refer to Section 6.04(G), Landscaping.
Parking	Refer to Section 6.04 (H) Parking.	Refer to Section 6.04 (H) Parking.	Refer to Section 6.04 (H) Parking.

[1] For TC3 properties, density may be averaged over contiguous parcels.

[2] To mitigate the effects of adjacent service commercial or light industrial uses, increased setbacks and other measures, such as solid six-foot fence or masonry wall, shall be considered on a case by case basis by the Planning Commission during the Site Development Permit process, taking into consideration the nature of adjacent uses.

[3] See Note 2 above.

NCMU2 and TC2 Minimum Commercial Floor Area Diagram

Docusign Envelope ID: CBF2C20F-5303-4A8A-B89A-337ED5371F11

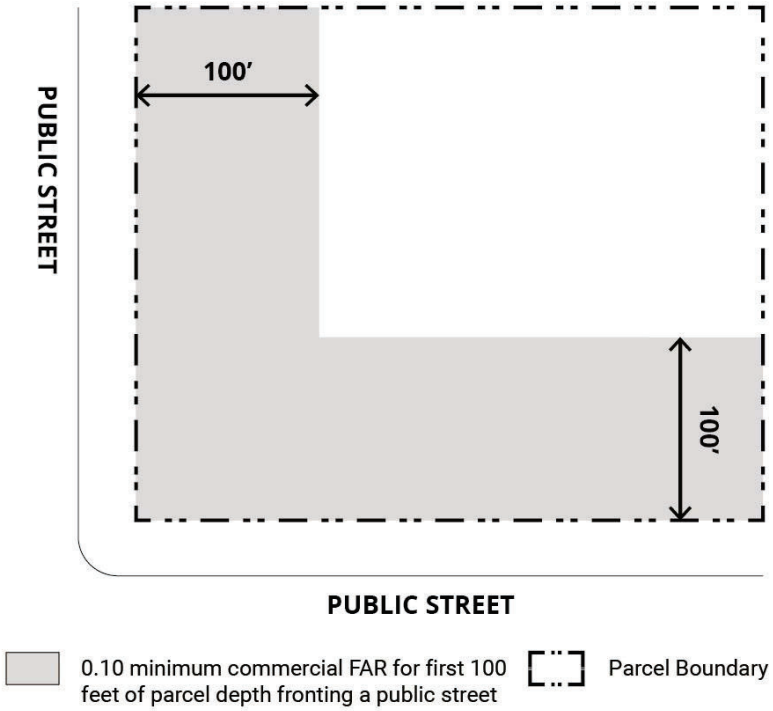

C. Multi-Family Residential Density within Mixed Use zones.

1. MXD Standards.

   a. The minimum number of multi-family residential units may be reduced for parcels less than 20,000 square feet.

   b. In buildings which have ground floor retail, restaurant, child care, or commercial service uses as allowed in Table 6.02-1, Mixed Use Zone Uses, the square footage of said uses does not contribute to the density limits.

2. MXD2 Standards.

   a. The minimum number of multi-family residential units may be reduced for parcels less than 20,000 square feet.

   b. Units with four bedrooms shall be counted as 1.5 units when calculating density.

   c. In buildings which have ground floor retail, restaurant, child care, or commercial service uses as allowed in Table 6.02-1, Mixed Use Zone Uses, the square footage of said uses does not contribute to the density limits.

3. MXD3 Standards.

   a. Units with four bedrooms shall be counted as 1.5 units when calculating density.

   b. In buildings which have ground floor retail, restaurant, child care, or commercial service uses as allowed in Table 6.02-1, Mixed Use Zone Uses, the square footage of said uses does not contribute to the density limits.

Docusign Envelope ID: CBF2C20F-5303-4A8A-B89A-337ED5371F11

4. NCMU1, NCMU2, and NCMU3 Standards.

    a. Residential units with four bedrooms shall be counted as 1.5 units when calculating density.

5. TC1, TC2, and TC3 standards

    a. Residential units with four bedrooms shall be counted as 1.5 units when calculating density.

D. Front and Street-Side Yard Setbacks. The following standards shall apply to front and street-side yard setbacks:

1. All MXD, NCMU, and TC zones.

    a. Where a public easement prevents a building from being located at its required minimum or maximum setbacks, the building shall be located as close to the back of said easement as possible.

    b. Trellises, canopies and fabric awnings may project up to five (5) into minimum front and street side setback areas and public right of ways, provided they are not less than eight (8) feet above the sidewalk.

    c. All buildings shall be oriented towards the street. Primary building entrances shall be oriented toward the street. For buildings located on a corner lots, either street primary building entrances may be oriented to either street.

2. MXD zones:

    a. All areas.

        i. Balconies, bay windows, porches, stoops, trellises, canopies and awnings may project into the minimum setback areas provided at least sixty percent (60%) of the required setback area is landscaping.

        ii. A building's first floor may be recessed from either the maximum front and street side building setback line or the specified build-to-line for the purposes of an arcade, or a small gathering/dining or special entry area.

            The arcade shall have a minimum height of (8) feet, a minimum width of eight (8) feet. Other recessed areas may have maximum depth of ten (10) feet, and may not exceed forty percent (40%) of the building's street facing elevation. An entry door area up to nine (9) feet wide may be recessed up to four (4) feet from the back of the sidewalk.

    b. Within the Midtown Specific Plan.

        i. The Ground Level Commercial Area (as shown on the Specific Plan Land Use Map, Figure 3.1), shall have a build-to-line that is fifteen (15) feet behind the curb. The fifteen (15) feet between the curb and the building build-to-line shall be developed with sidewalk and street trees.

    c. Outside the Midtown Specific Plan.

        i. Minimum of eight (8) feet and a maximum of fifteen (15) feet from back of sidewalk. The sidewalk shall be based on either the existing sidewalk or assumed ten (10) foot wide sidewalk, whichever is wider.

Docusign Envelope ID: CBF2C20F-5303-4A8A-B89A-337ED5371F11

3. MXD2 zones:

    a. All areas.

        i. Balconies, bay windows, porches, stoops, trellises, canopies and awnings may project into the setback areas up to the property line.

        ii. A building's first floor may be recessed from the front and street side building setback line for the purposes of an arcade, outdoor dining area, or special entry area.

        The arcade shall have a minimum height of (8) feet, and a minimum width of eight (8) feet. Other recessed areas may have a maximum depth of ten (10) feet, and may not exceed twenty percent (20%) of the building's street facing elevation. An entry door area up to nine (9) feet wide may be recessed up to four (4) feet from the front and street-side building setback.

    b. Within the Transit Area Specific Plan.

        i. Setbacks are defined and illustrated in the street sections of Chapter 5 of the Transit Area Specific Plan.

    c. Outside the Transit Area Specific Plan.

        i. Minimum eight (8) feet and a maximum of fifteen (15) feet from back of sidewalk.

E. Floor Area Ratio, Non-Residential. In addition to the standards listed in Table 6.04-1 Mixed Use Zone Development Standards for MXD2 and MXD3 zoned properties, the following shall apply:

1. A Floor Area Ratio of two and a half (2.5) for non-residential buildings may be considered for individual sites with a Conditional Use Permit, in accordance with Section 57, Conditional Uses Permitted by Commission, of this Chapter.

2. There are no FAR or density limits for hotels.

3. In buildings which have ground floor retail, restaurant, child care, or commercial service uses as provided for in Table 6.02-1, Mixed Use Zone Uses, the square footage of said uses does not contribute to the FAR calculation.

4. Buildings which include both non-residential uses and residential uses on the upper floors shall be considered "non-residential," and Floor Area Ratio standards shall apply.

F. Landscaping. All required front and street setback areas shall be landscaped or paved to allow for outdoor seating, display or goods, or street furniture.

G. Park and Open Space Requirements for Residential Uses.

1. Areas within Midtown Specific Plan.

    a. All residential projects within the Midtown Specific Plan area shall provide park land at a ratio of three and one-half (3½) acres per one thousand (1,000) population. Up to one and one-half (1½) of each three and one-half (3½) total park acres required (43%) may be satisfied by the provision of private recreational areas. The remaining park land requirement must be satisfied by either dedication of land to the City for public parks and open space, or payment of an in-lieu fee, as set forth in Section 9 (Park Dedication) of the Milpitas Subdivision Ordinance (Title XI, Chapter 1).

Docusign Envelope ID: CBF2C20F-5303-4A8A-B89A-337ED5371F11

b. A minimum of twenty-five percent (25%) of the total site shall be usable open space or recreational facilities. Balconies, porches, or roof decks may be considered usable open space when properly developed for work, play or outdoor living areas.

c. Balconies, porches, or roof decks may be considered usable open space when properly developed for work, play or outdoor living areas. Balconies and porches located above ground level with a minimum dimension of 4½ feet constructed for use by dwelling units shall be exempt from the useable open space dimension standards above and within Section 2 of this Chapter, and may be considered to satisfy usable open space requirements. Each dwelling unit shall be provided with private open space as follows:

i. Balconies and porches (above ground level): minimum sixty (60) square feet; or

ii. Patios (at ground level): minimum one hundred square feet.

2. Areas within Transit Area Specific Plan.

a. All residential projects shall provide park land at a ratio of three and one-half (3.5) acres per one thousand (1,000) population.

i. Two (2) of the required three and one-half (3.5) acres must be satisfied by either dedication of land to the City for public parks and open space, or payment of an in-lieu fee, as set forth in Section 9 (Park Dedication) of the Milpitas Subdivision Ordinance (Title XI, Chapter 1). Land dedication is required if a park is shown on a property on Figure 3-8 of the Transit Area Specific Plan.

ii. Up to one and one-half (1.5) of each three and one-half (3.5) total park acres required (43%) may be satisfied by the provision of private recreational areas. Private open space cannot be shared between separate developments.

b. Each residential project shall provide adequate on-site usable open space or recreational facilities to the approval of the Planning Commission through the Site Development Permit process. Each dwelling unit shall be provided with private open space as follows:

i. Balconies (above ground level): minimum forty (40) square feet; or

ii. Patios and porches (at ground level): minimum fifty (50) square feet.

c. All development projects shall dedicate land for parks if a park is shown on a property on Figure 3-8 of the Transit Area Specific Plan.

d. All commercial development projects shall dedicate and/or improve public trails if a trail is shown on a property on Figure 3-8 of the Transit Area Specific Plan.

e. Twenty percent (20%) of a landscape buffer area may count towards the public park and open space requirements when it includes trails or wide sidewalks connected to the pedestrian and bicycle network.

f. Park Sites: Parks must be bordered by public streets, or public right-of-way such as a trail or railroad right-of-way, on at least three sides.

3. Areas designated NCMU and TC

a. Park Land. All residential projects shall provide park land at a ratio of three and one-half (3.5) acres per one thousand (1,000) population.

Docusign Envelope ID: CBF2C20F-5303-4A8A-B89A-337ED5371F11

i. Park Land must be satisfied by either dedication of land to the City for public parks and open space, or payment of an in-lieu fee, as set forth in Section 9 (Park Dedication) of the Milpitas Subdivision Ordinance (Title XI, Chapter 1).

b. Publicly Accessible Parks and Open Spaces. All mixed use or residential only projects on sites between 3 acres and 5 acres shall dedicate 5% of total site area to publicly accessible parks and open space. All mixed use or residential only projects greater than 5 acres shall dedicate 10% of total site area to publicly accessible parks and open space. Publicly accessible parks, plazas, and open spaces provided to meet the requirement below may be counted towards the park land requirement above.

c. Usable Open Space. A minimum of twenty-five percent (25%) of the total site shall be usable open space or recreational facilities. Usable open space may be provided as Common Open Space or Private Open Space.

5. Areas outside Specific Plans.

a. All residential projects outside a Specific Plan area shall comply with the park land dedication provisions provided in Section 9.06 (Amount of Park Land to be Dedicated) of the Milpitas Subdivision Ordinance.

H. Parking Summary: Requirements are located in Section 53

1. Areas designated NCMU and TC

a. The minimum number of parking spaces required for residential uses shall be as follows:

Studio and 1-bedroom (up to 1,100 sf): 1 per unit
2-bedroom (up to 1,1100 sf): 1.5 per unit
3 or more bedrooms and/or 1,101 sf or larger: 2 per unit

b. The minimum number of parking spaces required for commercial uses shall be 1 space per 300 sq.ft. of commercial use.

For other parking-related standards, refer to Section 53, Off Street Parking Regulations, of this Chapter.

TABLE IS EXCEPRT FROM SECTION 53

Residential use	
Studio and 1 bedroom (up to 1,100 sf)	1 per unit
2 bedroom (up to 1,100 sf)	1.5 per unit
3 or more bedrooms and/or 1,101 sf or larger	2 per unit
Guest parking for residential	
Projects with Parking structures	10% of the total required, may be uncovered
Projects with Private garages	10% of the total required, may be uncovered

Docusign Envelope ID: CBF2C20F-5303-4A8A-B89A-337ED5371F11

Bicycle parking	5% of total required
Commercial use	
Ground Floor Retail	1 per 300 sq. ft.
Office	1 per 300 sq. ft.
Restaurants	1 per 300 sq.ft.
Short-Term Rentals	1 per unit
Other uses	Refer to specific uses within this table
Bicycle parking	5% of total auto spaces required
Mobile Homes	Refer to Section 13.07, Mobile Homes
Senior Housing	0.5 per unit plus 2 per manager's unit
Single Room Occupancy (SRO)	none required

XI-10-6.05 Reserved

XI-10-6.06 Special Development Standards

A. Utilities.

1. Utilities shall be placed in underground or subsurface conduits.
2. All mechanical equipment, ground transformers and meters shall be located and screened to minimize visual impacts.
3. Rooftop mechanical equipment shall be concealed from street level views through roof designs that area architecturally integrated with the building, such as equipment wells and parapets.
4. Public utility distribution meters, vaults and similar installations shall be consolidated in a single area whenever possible and located away from highly visible areas such as street corners and public open spaces.
5. Backflow preventors shall be located within landscaped setback areas and painted black or dark green to minimize visual impact. Where no landscaped setback areas exist the backflow preventors shall be incorporated into the front of the building to minimize visual obtrusiveness.

Docusign Envelope ID: CBF2C20F-5303-4A8A-B89A-337ED5371F11

6. Refuse and recycling containers shall not be visible from a public or private street. Such containers shall be stored either within the parking facility of the building or within a vehicular accessway with screening designed to meet the requirements of this section.

7. Trash enclosure walls shall incorporate building materials and colors that match the architecture of the building, and be well landscaped.

8. All telecommunications antennas shall be building facade or roof mounted and screened appropriately.

9. On Main Street only telecommunication facilities that are disguised to appear as a part of the building architecture (i.e. "stealth" antennas) may be used.

B. Outdoor music

1. Outdoor music as an accessory use in conjunction with a restaurant or bar in the MXD, MXD2, MXD3, NCMU, and TC zones shall be permitted for the entertainment and enjoyment of customers at the restaurant or bar during regular operating hours. Outdoor music as an accessory use shall be limited to the hours of 9:00 am to 11:00 pm.

2. Recorded background music may be permitted outdoors on public sidewalks and other public areas subject to the standards of this Chapter and Title V – Public Health, Safety and Welfare, Chapter 213 – Noise Abatement.

3. Noise levels for outdoor music, when permitted as an accessory use to a restaurant or bar, shall not exceed a maximum range of 70 to 90 decibels (dB). See also Title V – Public Health, Safety and Welfare, Subsections V-213-2 and V-213-3, for additional regulations.

4. Larger outdoor music events, both live and recorded music, that are intended for the entertainment and enjoyment of the general public shall not be considered accessory uses and shall require a Special Event Permit pursuant to Section 15, Special Events and Activities, of this Chapter.

XI-10-6.07 Exceptions to Standards

1. Exceptions to all but the use, floor area ratio, density, and park land requirement regulations of this Section may be approved by the Planning Commission through approval of a Conditional Use Permit in accordance with the requirements of Section 57, Conditional Uses Permitted by Commission, of this Chapter.

2. In addition to the required findings under Chapter 57, the Planning Commission must be able to make the following two additional findings for such exceptions:

   a. The exceptions meet the design intent identified within the Zoning District and/or Specific Plan and do not detract from the overall architectural, landscaping and site planning integrity of the proposed development.

   b. The exceptions allow for a public benefit not otherwise obtainable through the strict application of the specified standard.

Docusign Envelope ID: CBF2C20F-5303-4A8A-B89A-337ED5371F11

XI-10-6.08 Conformance with Specific Plans

Properties located within Specific Plans shall conform to the underlying Specific Plan in accordance with Section XI-10-11.06, Conformance with Specific Plans, of this Chapter.

SECTION 4. AMENDMENT OF MILPITAS MUNICIPAL CODE TITLE XI, CHAPTER 10, SECTION 6.0 (ZONING MAP)

The Zoning Map of the City of Milpitas, as amended, which was adopted as part of ordinance No. 38, enacted as Chapter XI-10 (Zoning, Planning, and Annexations) of the Milpitas Municipal Code, is hereby amended by rezoning the land use designation of approximately 273- acre area within the depicted maps as attached **Exhibit A, B, C, and D** and separately listed in **Exhibit E.**

SECTION 5. CALIFORNIA ENVIRONMENTAL QUALITY ACT

The adoption of this Ordinance is under the authority of an Addendum to the Milpitas General Plan Update Final EIR (March 2021, State Clearinghouse No. 2020070348); that was prepared pursuant to CEQA Guidelines Sections 15162 and 15164, to evaluate whether the Project's environmental impacts are covered by and within the scope of the Milpitas General Plan Update FEIR. The Addendum Evaluation details any changes in the project, changes in circumstances under which the project is undertaken, and/or "new information of substantial importance" that may cause one or more effects to environmental resources. The attached Addendum substantiates and supports the City's determination that the HOD changes are within the scope of the General Plan EIR, do not require subsequent action under CEQA Guidelines Section 15162, and adequately analyze potential environmental impacts in conjunction with the EIR. Further, although the Project has been revised from the initial Addendum, dated April 2024, Rincon Consultants, Inc., on behalf of the City, prepared a Supplemental Letter (memorialized as an attachment to the staff report, dated January 28, 2025) and found that the proposed zoning changes and the latest revisions would result in a reduced buildout compared to the Addendum analysis. This reduction in residential units and the consistency in non-residential space reduction, specifically commercial FAR minimums and maximums, ensure that the impacts would be less significant, as previously analyzed, and similar to or reduced compared to the Addendum conclusions. Additionally, the proposed changes are consistent with the overall land use and growth projections assumed within the General Plan EIR, which has already accounted for and mitigated potential environmental impacts. Since the environmental conditions have not changed since the April 2024 Addendum, the baseline conditions for analyzing impacts remain the same. Consequently, the reduced buildout further supports the conclusion that the impacts would be less significant, and the conclusions of the Addendum remain valid. Based on its independent review and consideration, the City Council hereby finds that the Addendum and the Supplemental Letter to the Addendum complies with the requirements of CEQA and adopts the conclusions in the Addendum and the Supplemental Letter to the Addendum on the basis of the evidence and reasoning set forth therein.

SECTION 6. SEVERABILITY

The provisions of this Ordinance are severable, and the invalidity of any phrase, clause, provision or part shall not affect the validity of the remainder.

SECTION 7. EFFECTIVE DATE AND POSTING

In accordance with Section 36937 of the Government Code of the State of California, this Ordinance shall take effect thirty (30) days from and after the date of its passage. The City Clerk of the City of Milpitas

Docusign Envelope ID: CBF2C20F-5303-4A8A-B89A-337ED5371F11

shall cause this Ordinance or a summary thereof to be published in accordance with Section 36933 of the Government Code of the State of California.

Docusign Envelope ID: CBF2C20F-5303-4A8A-B89A-337ED5371F11

Exhibit A: Proposed NCMU Zones at Calaveras Blvd

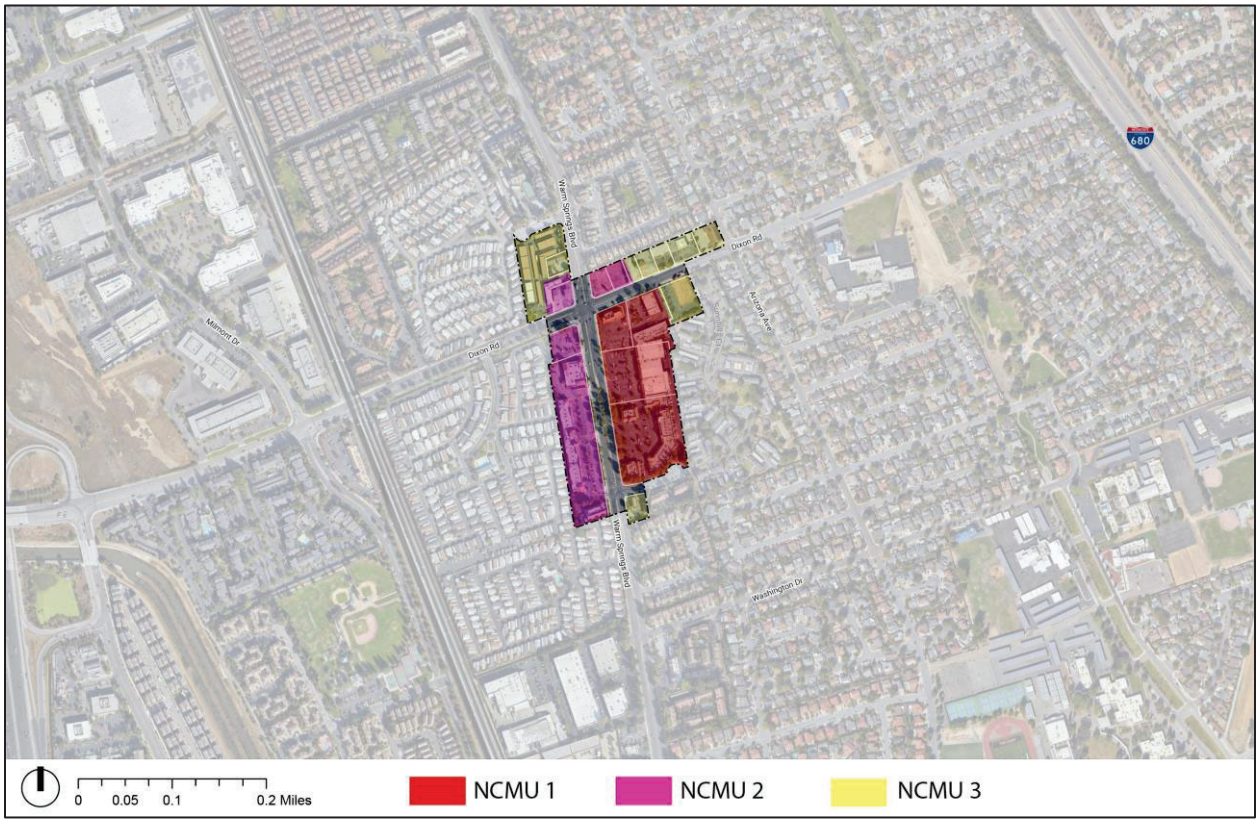

Docusign Envelope ID: CBF2C20F-5303-4A8A-B89A-337ED5371F11

Exhibit B: Proposed NCMU Zones at Landess Ave

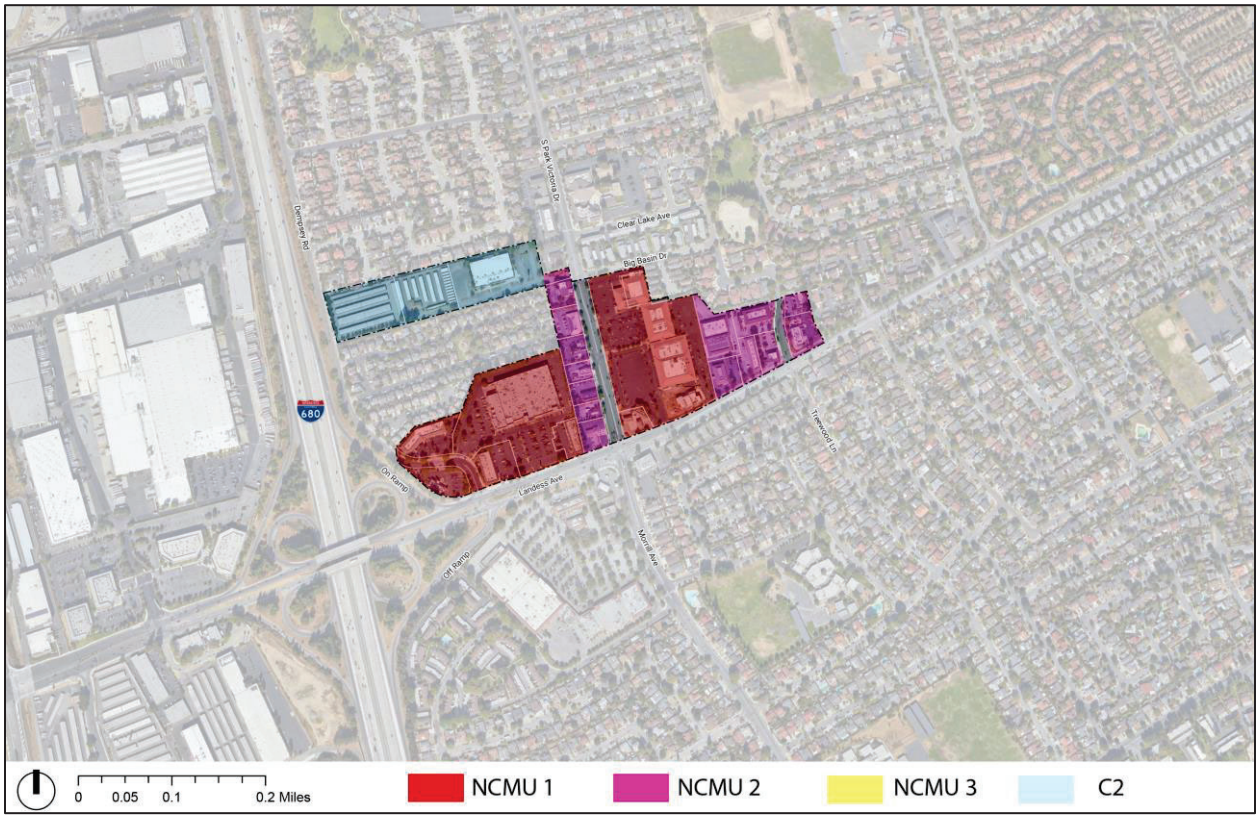

Docusign Envelope ID: CBF2C20F-5303-4A8A-B89A-337ED5371F11

Exhibit C: Proposed NCMU Zones at Dixon Rd

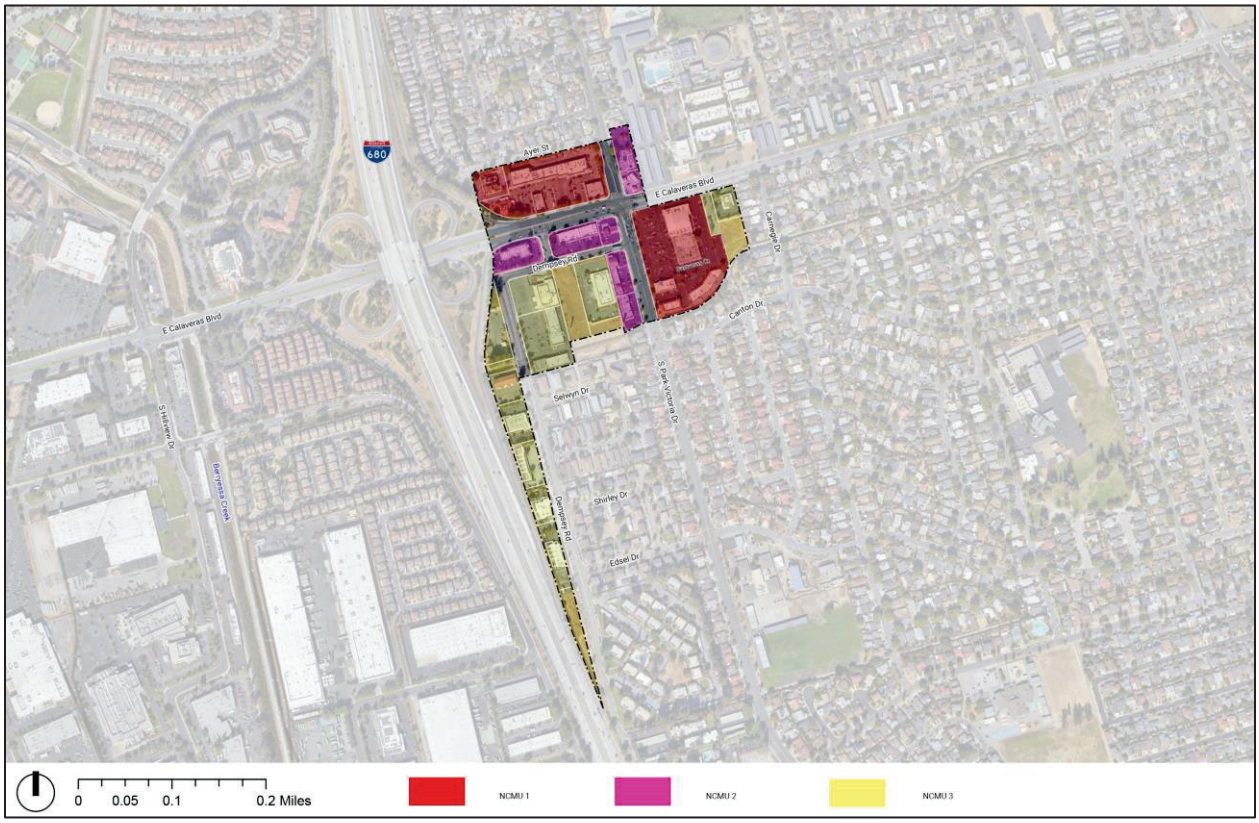

Docusign Envelope ID: CBF2C20F-5303-4A8A-B89A-337ED5371F11

Exhibit D: Proposed TC Zones

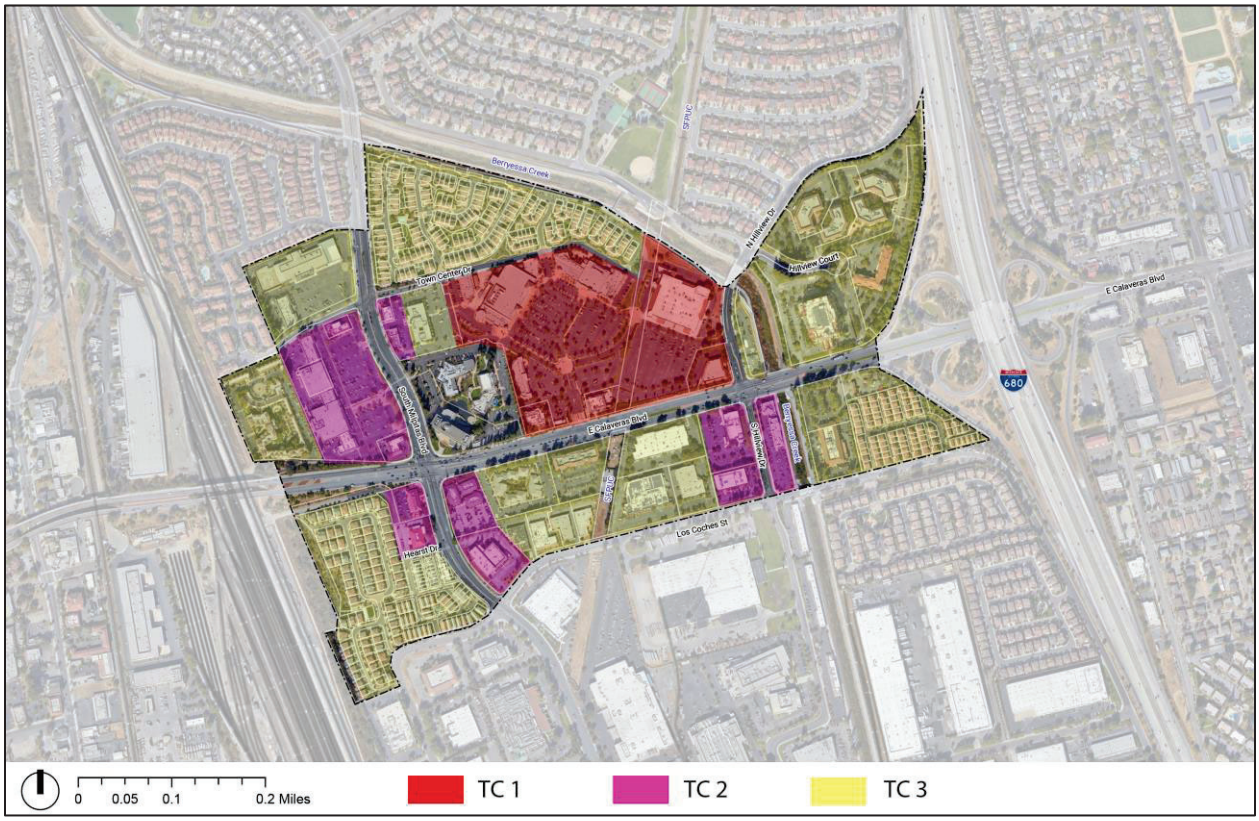

Docusign Envelope ID: CBF2C20F-5303-4A8A-B89A-337ED5371F11

Exhibit E: Proposed Zoning updates to implement the HODs, NCMU, and TC

APN	Existing Zoning	Proposed Zoning
8804078	C1	NCMU1
2606030	C	NCMU1
8835011	C2	NCMU1
2606010	C	NCMU1
2913039	C2	NCMU1
8835017	C2	NCMU1
8835018	C1	NCMU1
8836010	C2	NCMU1
2913041	C2	NCMU1
8836044	C2	NCMU1
8835015	C1	NCMU1
2606001	C1	NCMU1
8835016	C2	NCMU1
2606011	C	NCMU1
2606029	C	NCMU1
8836045	C2	NCMU1
8836002	CSS	NCMU2
8843043	C2	NCMU2
2913014	COS	NCMU2
8804010	C1	NCMU2
8804065	C1	NCMU2
8836040	CSS	NCMU2
8836041	CSS	NCMU2
8836025	CSS	NCMU2
8804075	C15	NCMU2
2605023	C1S	NCMU2
8804043	AS	NCMU2
2913013	C1H	NCMU2
2202050	S	NCMU2
8843031	C2S	NCMU2
8843002	C2	NCMU2
8843026	C2	NCMU2
2202049	S	NCMU2
2201004	HSS	NCMU2
8843028	C2	NCMU2
8836030	CSS	NCMU2
8843027	C2	NCMU2
8836036	CSS	NCMU2

Docusign Envelope ID: CBF2C20F-5303-4A8A-B89A-337ED5371F11

8836035	CSS	NCMU2
8804048	C1S	NCMU2
8843025	C2	NCMU2
2605024	MXD-S	NCMU2
8804077	R1	NCMU3
8804076	C1	NCMU3
2605019	C1S	NCMU3
2605021	C1S	NCMU3
2605018	C1S	NCMU3
2605020	C1S	NCMU3
8804072	C	NCMU3
2201011	HS	NCMU3
8804060	C1	NCMU3
8804001	C1S	NCMU3
8804056	C1S	NCMU3
8804073	C	NCMU3
2201003	HSS	NCMU3
2605053	C1S	NCMU3
2812025	TC	TC1
2822016	TC	TC1
2826001	TC	TC3
2812004	TC	TC1
2801001	TC	TC3
2822009	TC	TC1
2822132	TC	TC2
2822008	TC	TC1
2812013	TC	TC1
2812014	TC	TC1
2812016	TC	TC1
2822011	TC	TC2
8628051	TC	TC1
8628031	TC	TC1
8628032	TC	TC1
8628052	TC	TC1
8628033	TC	TC1
8628034	TC	TC1
2812020	TC	TC2
8628038	TC	TC2
8629079	TC	TC2
8628045	TC	TC2
8628035	TC	TC2
8628019	TC	TC2
8628040	TC	TC2

Docusign Envelope ID: CBF2C20F-5303-4A8A-B89A-337ED5371F11

8628029	TC	TC2
8679087	TC	TC2
2826004	TC	TC3
2826006	TC	TC3
2826005	TC	TC3
2826003	TC	TC3
2812021	TC	TC3
8629060	TC	TC3
8628047	TC	TC3
8628021	TC	TC3
8628020	TC	TC3
8629060	TC	TC3
2822012	TC	TC3
8679073	TC	TC3
8628035	TC	TC3
8679076	TC	TC3
8679037	TC	TC3
8679036	TC	TC3
8679035	TC	TC3
8679034	TC	TC3
8679072	TC	TC3
8679074	TC	TC3
8679075	TC	TC3
8679033	TC	TC3
8679077	TC	TC3
8679032	TC	TC3
8679078	TC	TC3
8679031	TC	TC3
8679079	TC	TC3
8679030	TC	TC3
8679080	TC	TC3
8679029	TC	TC3
8679043	TC	TC3
8679042	TC	TC3
8679044	TC	TC3
8679041	TC	TC3
8679045	TC	TC3
8679040	TC	TC3
8679046	TC	TC3
8679047	TC	TC3
8679048	TC	TC3
8679049	TC	TC3
8679050	TC	TC3

Docusign Envelope ID: CBF2C20F-5303-4A8A-B89A-337ED5371F11

8679051	TC	TC3
8679052	TC	TC3
8679071	TC	TC3
8679053	TC	TC3
8679070	TC	TC3
8679054	TC	TC3
8679069	TC	TC3
8679055	TC	TC3
8679068	TC	TC3
8679056	TC	TC3
8679067	TC	TC3
8679057	TC	TC3
8679066	TC	TC3
8679058	TC	TC3
8679065	TC	TC3
8679059	TC	TC3
8679064	TC	TC3
8679060	TC	TC3
8679063	TC	TC3
8679061	TC	TC3
8692029	TC	TC3
8679038	TC	TC3
8692019	TC	TC3
8679085	TC	TC3
8679062	TC	TC3
8679087	TC	TC3
8692005	TC	TC3
8692028	TC	TC3
8692026	TC	TC3
8692024	TC	TC3
8692023	TC	TC3
8692022	TC	TC3
8692020	TC	TC3
8692018	TC	TC3
8692016	TC	TC3
8692014	TC	TC3
8692013	TC	TC3
8692015	TC	TC3
8692017	TC	TC3
8626037	TC	TC3
8679039	TC	TC3
8628040	TC	TC3
8692027	TC	TC3

Docusign Envelope ID: CBF2C20F-5303-4A8A-B89A-337ED5371F11

8692006	TC	TC3
8692007	TC	TC3
8692008	TC	TC3
8692010	TC	TC3
8692011	TC	TC3
8692012	TC	TC3
8692025	TC	TC3
8668064	TC	TC3
8668068	TC	TC3
8668070	TC	TC3
8668090	TC	TC3
8668071	TC	TC3
8668089	TC	TC3
8668072	TC	TC3
8668065	TC	TC3
8668073	TC	TC3
8668016	TC	TC3
8668076	TC	TC3
8668019	TC	TC3
8668011	TC	TC3
8668020	TC	TC3
8668012	TC	TC3
8668013	TC	TC3
8668014	TC	TC3
8668017	TC	TC3
8668015	TC	TC3
8668059	TC	TC3
8668058	TC	TC3
8668057	TC	TC3
8668061	TC	TC3
8668056	TC	TC3
8668062	TC	TC3
8668054	TC	TC3
8668082	TC	TC3
8629027	TC	TC3
8668051	TC	TC3
8668049	TC	TC3
8668048	TC	TC3
8668050	TC	TC3
8668047	TC	TC3
8668046	TC	TC3
8668052	TC	TC3
8668045	TC	TC3

Docusign Envelope ID: CBF2C20F-5303-4A8A-B89A-337ED5371F11

8668053	TC	TC3
8668021	TC	TC3
8668030	TC	TC3
8668022	TC	TC3
8668029	TC	TC3
8668023	TC	TC3
8668028	TC	TC3
8668024	TC	TC3
8668027	TC	TC3
8668025	TC	TC3
8668026	TC	TC3
8668063	TC	TC3
8668005	TC	TC3
8668018	TC	TC3
8668084	TC	TC3
8668069	TC	TC3
8668010	TC	TC3
8668087	TC	TC3
8668009	TC	TC3
8668088	TC	TC3
8668008	TC	TC3
8668003	TC	TC3
8668007	TC	TC3
8668004	TC	TC3
8668006	TC	TC3
8668083	TC	TC3
8668078	TC	TC3
8668077	TC	TC3
8668081	TC	TC3
8668080	TC	TC3
8668075	TC	TC3
8668079	TC	TC3
8668074	TC	TC3
8668031	TC	TC3
8668032	TC	TC3
8668034	TC	TC3
8668036	TC	TC3
8668044	TC	TC3
8668043	TC	TC3
8668037	TC	TC3
8668042	TC	TC3
8668039	TC	TC3
8668041	TC	TC3

Docusign Envelope ID: CBF2C20F-5303-4A8A-B89A-337ED5371F11

8668040	TC	TC3
8668086	TC	TC3
8668033	TC	TC3
8668060	TC	TC3
8668035	TC	TC3
8668038	TC	TC3
8668055	TC	TC3
2831016	TC	TC3
2831032	TC	TC3
2835054	TC	TC3
2833001	TC	TC3
2831033	TC	TC3
2833014	TC	TC3
2831030	TC	TC3
2833034	TC	TC3
2831029	TC	TC3
2833035	TC	TC3
2831028	TC	TC3
2833037	TC	TC3
2833038	TC	TC3
2833040	TC	TC3
2833041	TC	TC3
2831027	TC	TC3
2833042	TC	TC3
2831026	TC	TC3
2831025	TC	TC3
2833044	TC	TC3
2833011	TC	TC3
2835012	TC	TC3
2835014	TC	TC3
2835015	TC	TC3
2835016	TC	TC3
2835018	TC	TC3
2835020	TC	TC3
2835028	TC	TC3
2835029	TC	TC3
2835032	TC	TC3
2835033	TC	TC3
2835034	TC	TC3
2835035	TC	TC3
2835038	TC	TC3
2835039	TC	TC3
2835040	TC	TC3

Docusign Envelope ID: CBF2C20F-5303-4A8A-B89A-337ED5371F11

2835043	TC	TC3
2835044	TC	TC3
2835045	TC	TC3
2835046	TC	TC3
2835047	TC	TC3
2835049	TC	TC3
2835050	TC	TC3
2835051	TC	TC3
2835053	TC	TC3
2835055	TC	TC3
2835056	TC	TC3
2835057	TC	TC3
2835059	TC	TC3
2835061	TC	TC3
2835062	TC	TC3
2835063	TC	TC3
2835064	TC	TC3
2835065	TC	TC3
2831037	TC	TC3
2831004	TC	TC3
2835019	TC	TC3
2833046	TC	TC3
2831039	TC	TC3
2831020	TC	TC3
2831012	TC	TC3
2832021	TC	TC3
2832014	TC	TC3
2835048	TC	TC3
2832018	TC	TC3
2833043	TC	TC3
2831034	TC	TC3
2833036	TC	TC3
2833019	TC	TC3
2832010	TC	TC3
2832009	TC	TC3
2832008	TC	TC3
2832002	TC	TC3
2833012	TC	TC3
2831009	TC	TC3
2835041	TC	TC3
2833023	TC	TC3
2832015	TC	TC3
2835030	TC	TC3

Docusign Envelope ID: CBF2C20F-5303-4A8A-B89A-337ED5371F11

2835031	TC	TC3
2831011	TC	TC3
2831001	TC	TC3
2835060	TC	TC3
2831007	TC	TC3
2835006	TC	TC3
2832016	TC	TC3
2831008	TC	TC3
2835005	TC	TC3
2832017	TC	TC3
2833031	TC	TC3
2833032	TC	TC3
2832030	TC	TC3
2832029	TC	TC3
2832028	TC	TC3
2832027	TC	TC3
2831014	TC	TC3
2831015	TC	TC3
2831013	TC	TC3
2831017	TC	TC3
2831018	TC	TC3
2831010	TC	TC3
2835042	TC	TC3
2835025	TC	TC3
2835037	TC	TC3
2833039	TC	TC3
2835010	TC	TC3
2835013	TC	TC3
2832012	TC	TC3
2832022	TC	TC3
2832013	TC	TC3
2832019	TC	TC3
2833030	TC	TC3
2833003	TC	TC3
2833029	TC	TC3
2833004	TC	TC3
2833028	TC	TC3
2833005	TC	TC3
2833027	TC	TC3
2833006	TC	TC3
2833026	TC	TC3
2833007	TC	TC3
2833008	TC	TC3

Docusign Envelope ID: CBF2C20F-5303-4A8A-B89A-337ED5371F11

2833009	TC	TC3
2833010	TC	TC3
2833025	TC	TC3
2833024	TC	TC3
2833021	TC	TC3
2833048	TC	TC3
2833015	TC	TC3
2833016	TC	TC3
2833017	TC	TC3
2833018	TC	TC3
2832011	TC	TC3
2835021	TC	TC3
2835001	TC	TC3
2835002	TC	TC3
2835022	TC	TC3
2835003	TC	TC3
2835023	TC	TC3
2835004	TC	TC3
2835024	TC	TC3
2835007	TC	TC3
2835026	TC	TC3
2835008	TC	TC3
2835027	TC	TC3
2835009	TC	TC3
2835011	TC	TC3
2831019	TC	TC3
2831021	TC	TC3
2831022	TC	TC3
2831023	TC	TC3
2831024	TC	TC3
2833045	TC	TC3
2833047	TC	TC3
2835036	TC	TC3
2833002	TC	TC3
2833033	TC	TC3
2832005	TC	TC3
2835052	TC	TC3
2835017	TC	TC3
2832020	TC	TC3
2833022	TC	TC3
2833013	TC	TC3
2835058	TC	TC3
2832007	TC	TC3

Docusign Envelope ID: CBF2C20F-5303-4A8A-B89A-337ED5371F11

2832006	TC	TC3
2832004	TC	TC3
2832023	TC	TC3
2832003	TC	TC3
2832024	TC	TC3
2832025	TC	TC3
2832001	TC	TC3
2832026	TC	TC3
2831038	TC	TC3
2831002	TC	TC3
2831003	TC	TC3
2831036	TC	TC3
2831035	TC	TC3
2831005	TC	TC3
2831006	TC	TC3
2831031	TC	TC3

Certificate Of Completion

Envelope Id: CBF2C20F-5303-4A8A-B89A-337ED5371F11
Status: Completed
Subject: Complete with Docusign: A Resolution 25-004 Combined Final for DocuSign lm.pdf
Source Envelope:
Document Pages: 53
Signatures: 1
Certificate Pages: 5
Initials: 0
AutoNav: Enabled
EnvelopeId Stamping: Enabled
Time Zone: (UTC-08:00) Pacific Time (US & Canada)

Envelope Originator:
Liz Medina
455 E Calaveras Blvd
Milpitas, CA 95035
emedina@milpitas.gov
IP Address: 50.59.22.125

Record Tracking

Status: Original
March 4, 2025 | 11:54
Holder: Liz Medina
emedina@milpitas.gov
Location: DocuSign

Security Appliance Status: Connected
Pool: StateLocal

Storage Appliance Status: Connected
Pool: City of Milpitas
Location: Docusign

Signer Events	Signature	Timestamp
Chair Parveen Gupta pg@cs-edit.com Security Level: Email, Account Authentication (None)	Signed by: 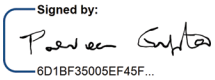 6D1BF35005EF45F... Signature Adoption: Drawn on Device Using IP Address: 147.185.47.129	Sent: March 4, 2025 | 12:16 Viewed: March 4, 2025 | 13:36 Signed: March 4, 2025 | 13:44

Electronic Record and Signature Disclosure:
Accepted: March 4, 2025 | 13:36
ID: 7283f9dd-f594-4c24-92fc-4bd17e0e65a4

In Person Signer Events	Signature	Timestamp

Editor Delivery Events	Status	Timestamp

Agent Delivery Events	Status	Timestamp

Intermediary Delivery Events	Status	Timestamp

Certified Delivery Events	Status	Timestamp

Carbon Copy Events	Status	Timestamp
Lillian VanHua lvanhua@ci.milpitas.ca.gov Security Level: Email, Account Authentication (None)	COPIED	Sent: March 4, 2025 | 13:44 Viewed: March 4, 2025 | 14:43

Electronic Record and Signature Disclosure:
Accepted: November 18, 2024 | 11:26
ID: d0f114af-c77b-40f8-8fed-3e42ee98becc

Witness Events	Signature	Timestamp

Notary Events	Signature	Timestamp

Envelope Summary Events	Status	Timestamps
Envelope Sent	Hashed/Encrypted	March 4, 2025 | 12:16
Certified Delivered	Security Checked	March 4, 2025 | 13:36
Signing Complete	Security Checked	March 4, 2025 | 13:44

Envelope Summary Events	Status	Timestamps
Completed	Security Checked	March 4, 2025 | 13:44

Payment Events	Status	Timestamps

Electronic Record and Signature Disclosure

ELECTRONIC RECORD AND SIGNATURE DISCLOSURE

From time to time, City of Milpitas (we, us or Company) may be required by law to provide to you certain written notices or disclosures. Described below are the terms and conditions for providing to you such notices and disclosures electronically through the DocuSign system. Please read the information below carefully and thoroughly, and if you can access this information electronically to your satisfaction and agree to this Electronic Record and Signature Disclosure (ERSD), please confirm your agreement by selecting the check-box next to 'I agree to use electronic records and signatures' before clicking 'CONTINUE' within the DocuSign system.

Getting paper copies

At any time, you may request from us a paper copy of any record provided or made available electronically to you by us. You will have the ability to download and print documents we send to you through the DocuSign system during and immediately after the signing session and, if you elect to create a DocuSign account, you may access the documents for a limited period of time (usually 30 days) after such documents are first sent to you. After such time, if you wish for us to send you paper copies of any such documents from our office to you, you will be charged a $0.00 per-page fee. You may request delivery of such paper copies from us by following the procedure described below.

Withdrawing your consent

If you decide to receive notices and disclosures from us electronically, you may at any time change your mind and tell us that thereafter you want to receive required notices and disclosures only in paper format. How you must inform us of your decision to receive future notices and disclosure in paper format and withdraw your consent to receive notices and disclosures electronically is described below.

Consequences of changing your mind

If you elect to receive required notices and disclosures only in paper format, it will slow the speed at which we can complete certain steps in transactions with you and delivering services to you because we will need first to send the required notices or disclosures to you in paper format, and then wait until we receive back from you your acknowledgment of your receipt of such paper notices or disclosures. Further, you will no longer be able to use the DocuSign system to receive required notices and consents electronically from us or to sign electronically documents from us.

All notices and disclosures will be sent to you electronically

Unless you tell us otherwise in accordance with the procedures described herein, we will provide electronically to you through the DocuSign system all required notices, disclosures, authorizations, acknowledgements, and other documents that are required to be provided or made available to you during the course of our relationship with you. To reduce the chance of you inadvertently not receiving any notice or disclosure, we prefer to provide all of the required notices and disclosures to you by the same method and to the same address that you have given us. Thus, you can receive all the disclosures and notices electronically or in paper format through the paper mail delivery system. If you do not agree with this process, please let us know as described below. Please also see the paragraph immediately above that describes the consequences of your electing not to receive delivery of the notices and disclosures electronically from us.

How to contact City of Milpitas:

You may contact us to let us know of your changes as to how we may contact you electronically, to request paper copies of certain information from us, and to withdraw your prior consent to receive notices and disclosures electronically as follows:
To contact us by email send messages to: helpdesk@milpitas.gov

To advise City of Milpitas of your new email address

To let us know of a change in your email address where we should send notices and disclosures electronically to you, you must send an email message to us at helpdesk@milpitas.gov and in the body of such request you must state: your previous email address, your new email address. We do not require any other information from you to change your email address.

If you created a DocuSign account, you may update it with your new email address through your account preferences.

To request paper copies from City of Milpitas

To request delivery from us of paper copies of the notices and disclosures previously provided by us to you electronically, you must send us an email to helpdesk@milpitas.gov and in the body of such request you must state your email address, full name, mailing address, and telephone number. We will bill you for any fees at that time, if any.

To withdraw your consent with City of Milpitas

To inform us that you no longer wish to receive future notices and disclosures in electronic format you may:

i. decline to sign a document from within your signing session, and on the subsequent page, select the check-box indicating you wish to withdraw your consent, or you may;

ii. send us an email to helpdesk@milpitas.gov and in the body of such request you must state your email, full name, mailing address, and telephone number. We do not need any other information from you to withdraw consent.. The consequences of your withdrawing consent for online documents will be that transactions may take a longer time to process..

Required hardware and software

The minimum system requirements for using the DocuSign system may change over time. The current system requirements are found here: https://support.docusign.com/guides/signer-guide-signing-system-requirements.

Acknowledging your access and consent to receive and sign documents electronically

To confirm to us that you can access this information electronically, which will be similar to other electronic notices and disclosures that we will provide to you, please confirm that you have read this ERSD, and (i) that you are able to print on paper or electronically save this ERSD for your future reference and access; or (ii) that you are able to email this ERSD to an email address where you will be able to print on paper or save it for your future reference and access. Further, if you consent to receiving notices and disclosures exclusively in electronic format as described herein, then select the check-box next to 'I agree to use electronic records and signatures' before clicking 'CONTINUE' within the DocuSign system.

By selecting the check-box next to 'I agree to use electronic records and signatures', you confirm that:

- You can access and read this Electronic Record and Signature Disclosure; and
- You can print on paper this Electronic Record and Signature Disclosure, or save or send this Electronic Record and Disclosure to a location where you can print it, for future reference and access; and
- Until or unless you notify City of Milpitas as described above, you consent to receive exclusively through electronic means all notices, disclosures, authorizations, acknowledgements, and other documents that are required to be provided or made available to you by City of Milpitas during the course of your relationship with City of Milpitas.

CITY OF MILPITAS
Planning Commission

MEETING MINUTES

7:00pm
Wednesday, February 26, 2025
CITY COUNCIL CHAMBERS,
455 E CALAVERAS BLVD, MILPITAS, CA
and
via TELECONFERENCE (Zoom Webinar)

CALL TO ORDER

Chair Gupta called the meeting to order at 7:00 pm.

PLEDGE OF ALLEGIANCE

Commissioner Galang led the pledge of allegiance.

ROLL CALL

Recording Secretary Medina called the roll.

PRESENT: Chair Gupta, Vice Chair Caulkins, Galang, Albana, Medina-Ashby and Kong.

ABSENT: Awasthi

STAFF: Jay Lee, Christopher Creech, Lillian VanHua, Chris Sensenig (Raimi+ Associates), and Elizabeth Medina

CONFLICT OF INTEREST/CAMPAIGN CONTRIBUTION DECLARATION

Assistant City Attorney Christopher Creech asked if any member of the commission had any personal or financial conflict of interest related to any of the items on the agenda, and there were none.

APPROVAL OF THE MEETING AGENDA

By motion, approve the meeting agenda for February 26, 2025.

Motion/Second Albana/Galang
Motion carried by a vote of AYES: 6 NOES: 0

APPROVAL OF THE MEETING MINUTES

By motion, approve the meeting minutes for February 12, 2025.

Motion/Second Kong/Caulkins
Motion carried by a vote of AYES: 4 NOES: 0 ABSTAIN: 2 (Albana, Galang)

ANNOUNCEMENTS

Planning Director Lee shared that the March 12 meeting will be cancelled. He also mentioned comment period for Comprehensive Zoning Update was open.

PUBLIC FORUM

Chair Gupta invited members of the public to address the commission, and there were none.

PUBLIC HEARING

IX-1 Housing Opportunity Districts (HODs) - P-GP24-0001, P-ZA24-0001: Addendum to the Milpitas General Plan 2040 EIR, General Plan Text Amendment, and Zoning Text and Map Amendments: Review and discuss the Final Housing Opportunity Districts (HODs) and Addendum to the Milpitas General Plan 2040 EIR (SCH#: 2020070348) and provide a recommendation for approval to the Milpitas City Council. The HODs project scope includes: 1) a General Plan Map and Text amendment (GP24-0001) to update the Town Center (TWC) and Neighborhood Commercial Mixed-Use (NCMU) descriptions and amend the land use designation for certain parcels; and 2) a Zoning Map and Text amendment (ZA24-0001) to establish

the Neighborhood Commercial Mixed-Use (NCMU-1,2,3) districts and subdistricts, and update the existing Town Center (TC) districts to establish the subdistricts (TC-1,2,3). CEQA: An Addendum to the Milpitas General Plan Update Final EIR (FEIR) (March 2021, SCH #2020070348) has been prepared pursuant to California Environmental Quality Act (CEQA) Guidelines Sections 15162 and 15164 to evaluate whether the Project's environmental impacts are covered by and within the scope of the Milpitas General Plan Update Final EIR (FEIR).

(47:26) Project Planner Lillian VanHua and Chris Sensenig from Raimi+ Associates addressed commissioners' clarifying questions on various topics related to:

1. **Project Extension and Legal Considerations**

    - The project deadline has passed, but an extension was granted by the California Housing and Community Development Department.
    - The extension allows the city to finalize zoning regulations to qualify for reimbursement.
    - Delay in project completion could risk funding being withheld.

2. **Impact on Housing Element Certification**

    - Failure to adopt the project could lead to the state decertifying the city's housing element.
    - Clarification requested on specific timelines for compliance and associated risks.

3. **Housing Site Inventory and Program Compliance**

    - Housing sites identified in the element update justify meeting regional housing allocations.
    - The city has a three-year window for rezoning identified sites.
    - Program 15, which calls for 200 affordable housing units, lacks a specific timeline but must be adopted to maintain compliance.

4. **Projected Housing Build-Out**

    - Discussion on expected development rates and potential reductions in total housing units.
    - Assumptions made based on economic conditions and development trends.

5. **Hotel Zoning and Floor Area Ratio (FAR) Regulations**

    - No maximum FAR applies to hotels to allow for feasible development.
    - Maximum height restrictions still apply.
    - Hotels are a conditional use in the CMU zone and a permitted use in the town center but require site development permits.

6. **Parking Regulations and Exemptions**

    - Some parcels fall under AB 2097, eliminating minimum parking requirements in high-transit areas.
    - Market demand will primarily determine parking needs.
    - Reduced parking minimums aim to encourage housing development by lowering construction costs.

7. **Affordable Housing Development Requirements**

- The city must foster, but not mandate, the development of 200 affordable housing units.
- Zoning changes are the city's main tool to facilitate this goal.
- Market conditions will influence actual development.

8. **Project Extension & Legal Implications:**

- Confirmation that an extension has been granted by the California Housing and Community Development Department (HCD).
- Discussion on legal deadlines for project completion and potential funding risks.
- Clarification that delays could lead to funding being withheld and potential decertification of the Housing Element.

9. **Housing Element Compliance & Timeline:**

- Inquiry on specific deadlines for project approval and the risk of decertification if not met.
- Explanation of zoning changes needed to maintain compliance.
- Three-year extension granted for rezoning efforts due to prior compliance.

10. **Projected Housing Development & Market Conditions:**

- Discussion on the requirement to foster, not mandate, the development of 200 affordable housing units.
- Analysis of economic factors affecting redevelopment likelihood.
- Identification of key sites that may be redeveloped within the current housing cycle (until 2031).

11. **Impact of Existing and Planned Housing Projects:**

- Clarification that recently approved projects (e.g., California Circle) contribute to the city’s total housing allocation.
- Differentiation between citywide Regional Housing Needs Allocation (RHNA) of 6,713 units and the 200 affordable units goal within the CMU.

12. **Hotel Development & Zoning Regulations:**

- Inquiry regarding floor area ratio (FAR) exemptions for hotels.
- Confirmation that hotels must adhere to maximum height regulations despite no FAR restrictions.
- Explanation of permitted and conditional use zones for hotels.

13. **Parking Regulations & Transit Proximity:**

- Discussion on reduced parking requirements, particularly in transit-adjacent areas.
- Explanation of legislative constraints (AB 2097) prohibiting parking minimums in designated high-transit areas.
- Stakeholder concerns on parking costs and market-driven parking demand.

14. **RHNA Allocation Methodology:**

- Explanation of how regional agencies determine housing growth projections.
- Overview of factors considered, including land availability, equity, amenities, and regional development priorities.

- Confirmation of city advocacy in determining a fair RHNA allocation.

15. **Traffic Impact and Mitigation Measures**

- Acknowledgment of significant community feedback regarding traffic concerns.
- Request for clarification on whether traffic mitigation was specifically addressed in the presentation.
- Inquiry about whether the city's traffic engineer has been consulted to assess the impact of the proposed project.
- Confirmation that a representative from the traffic engineering department is available to provide insight on project-specific and citywide traffic analysis.

Chair Gupta invited members of the public to address the commission and there were several speakers most :

- Shankar J
- Johnny Reed
- Amit Banjara
- Vidya Ullal
- Rigo Gallardo
- Vikas Gulati
- Irshad Rasheed
- Ken Kecskes
- Shalvi Varma
- Padma Subbaraya
- Nikunj Valdya
- Vishal Gandhi
- Eileen Fears
- Manali Desai
- Nithya P.
- Vaibhav Shah
- Albert Zamora

These community members shared their concerns on the following topics:

- **Opposition to the Project and Environmental Concerns**

A community member expressed strong disapproval, calling the project "atrocious" and questioning its environmental study approval.

Concerns were raised about the impact on traffic congestion, particularly on Dixon Landing Road, and the lack of proper engagement with the public.

The legitimacy of public notices was questioned, with one member highlighting missing links to essential documents.

- **Community Engagement & Decision-Making Transparency**

Several members emphasized that a small turnout (45 people at the meeting) does not equate to broad community engagement.

Concerns were raised about whether decisions were being made based on limited participation and inadequate outreach.

- **Impact on Quality of Life**

A resident living near the project site worried about losing sunlight due to building height, although they appreciated that the building height had been reduced from six to five stories.

Additional concerns included inadequate parking, increased traffic congestion, and the shrinking availability of open spaces.

Questions were raised about how previous housing developments have impacted traffic, schools, and infrastructure.

- **Request for More Time and Discussion**

A request was made to delay voting and allow residents more time to review the new proposals and changes.

The need for additional public dialogue was emphasized to ensure that residents' concerns are addressed before approval.

- **Labor Standards and Local Employment**

A representative from the Nor-Cal Carpenters Union urged the commission to prioritize hiring local workers and ensuring strong labor standards.

Advocacy for apprenticeship programs to create career pathways for local high school graduates was highlighted.

- **Transparency and Ethical Concerns**

A community member mentioned receiving an alleged financial offer to withdraw opposition, raising concerns about the integrity of the process.

Calls were made for transparency and ethical governance in project approvals.

Motion to close the Public Forum.

Motion/Second Caulkins/Medina-Ashby
**Request to postpone the vote on the motion*

Amendment to keep public forum open.
Motion/Second Kong/Medina-Ashby

Motion to close the Public Forum.

Motion/Second Kong/Medina-Ashby
Motion carried by a vote of AYES: 6 NOES: 0

Recommendation: Staff recommends that the Planning Commission open and close the public hearing and adopt Resolution No. 25-004, recommending that the City Council: 1) approve General Plan Map and Text Amendment No. GP24-0001 to change the descriptions of the Town Center (TWC) and Neighborhood Commercial Mixed-Use (NCMU) and change the land use designation of certain parcels; 2) approve Zoning Map and Text Amendment No. ZA24-0001 to establish the Neighborhood Commercial Mixed-Use (NCMU-1,2,3) districts and subdistricts, and update the existing Town Center (TC) districts to establish the subdistricts (TC-1,2,3); and 3) adopt the Housing Opportunity Districts Addendum to the Milpitas General Plan 2040 FEIR (SCH #2020070348) and the Supplemental Letter to the Addendum *with a suggestion to amend the parking regulations to be consistent with the Comprehensive Zoning Ordinance Update and amend section four of the resolution.

Motion/Second Caulkins/Gupta
Motion carried by a vote of AYES: 4 NOES: 0 ABSTAIN: 2 (Kong, Galang)

NEW BUSINESS

(2:31:00) Commissioner Kong prompted discussion on Traffic Management Task Force. The Planning Commission discussed a proposal to recommend the formation of a traffic management task force to the City Council, emphasizing community involvement in addressing congestion concerns. Commissioners strongly supported the idea, noting that traffic and parking issues have been major points of feedback from the public. The discussion expanded to include broader concerns such as school impact, health services, parks, and overall infrastructure, particularly in relation to the large-scale NCMU housing development. Staff clarified that while the commission could not take formal action, they could submit a consensus statement to the City Council. Ultimately, the commission unanimously agreed to recommend the creation of a task force, including community representatives, to study the impacts of the NCMU housing development on traffic, parking, schools, health services, parks, and overall quality of life. Staff will convey this recommendation to the City Council for consideration.

ADJOURNMENT

Chair Gupta adjourned the meeting at 9:33 pm
Motion/Second Medina-Ashby/Albana
Motion carried by a vote of AYES: 6 NOES: 0

Meeting Minutes submitted by
Planning Commission Secretary Elizabeth Medina

City of Milpitas

Housing Opportunity Districts

General Plan Amendment and Proposed Zoning Changes to NCMU and TC

Introduction

About the Project

In response to California's pressing affordable housing shortage and homelessness crisis, Governor Newsom's 2019-20 Budget Act earmarked $250 million for initiatives addressing these challenges. Notably, $119 million was allocated to the Local Early Action Planning Grant (LEAP), an essential non-competitive program empowering cities and counties to update planning documents and expedite housing production.

In September 2020, the City of Milpitas applied for LEAP funding to establish Housing Opportunity Districts (HOD) in priority areas outlined in its General Plan. HODs are designed to incentivize housing by allowing increased density, relaxed standards, streamlined permitting processes, and financial support for affordable housing. Securing a $300,000 LEAP grant, the city subsequently engaged Raimi and Associates through a professional services agreement to craft the HODs by June 2024, in tandem with other ongoing planning initiatives.

The Housing Opportunity Districts (HOD) project plays a critical role in implementing both the General Plan and the Housing Element to increase housing in the city while creating vibrant mixed-use neighborhoods.

Purpose of this Memorandum

This Memorandum presents the proposed General Plan amendment and zoning standards that implement the Town Center (TWC) and Neighborhood Commercial Mixed-Use (NCMU) designations. It is intended for review and approval by City staff, the Planning Commission, and the City Council.

The document outlines the project goals, the process employed to update the TC zone, create new NCMU zones along with the amendment to their General Plan definitions, and the final zoning and development standards recommended for incorporation in the citywide zoning code update initiated in 2023.

The recommended zoning and development standards are the result of extensive technical, financial, and modeling analyses, complemented by input from the community, relevant stakeholders, and city staff gathered over the past two years. Additionally, the Memorandum includes the detailed zoning and development standards in Appendix A and 3D renderings in Appendix B.

Project Goals

The HOD project was initiated with the primary objective of increasing the housing supply in the City of Milpitas while simultaneously reducing barriers associated with new housing construction. The overarching goals of the HOD project include:

- **Implementing General Plan policies**

  The HOD is intended to implement several General Plan policies identified through an extensive public input process.
- **Meeting current and future regional housing needs (RHNA)**

The city fell short in meeting its very low-, low-, and moderate- income regional housing targets over the implementation phase of the previous Housing Element and needs to plan for more housing, especially affordable housing, to overcome its housing shortfall.

- **Incentivizing affordable housing**
  Another goal is to incentivize affordable and special needs housing in the city. By creating tailored zoning regulations, these zones will help facilitate the production of all housing types. 100% affordable housing projects in NCMU and TWC are exempt from non-residential requirements.
- **Revitalizing aging shopping centers**
  Many existing commercial centers are underperforming, and their redevelopment as mixed-use projects can revitalize public spaces while adding to the city's tax base.

Project Summary

The HOD project introduces a comprehensive General Plan amendment and zoning update within the Neighborhood Commercial Mixed-Use (NCMU) and the Town Center (TC) areas of the City that allow for both horizontal and vertical mix of uses, enhancing the viability of mixed-use projects.

Based on the analysis completed for this HOD project, the proposed zoning adopts a place-based and flexible approach. It establishes three distinct NCMU zones (NCMU1, NCMU2, and NCMU3) and three TC zones (TC1, TC2, and TC3). These zones consider factors such as parcel size, location, current use, and future potential. Each zone permits increased residential density and a reduced minimum non-residential FAR, promoting versatility in development. Concurrently, the project outlines General Plan amendments to update the definitions associated with these land use designations.

The proposed NCMU Zones are:

1. NCMU1: includes big box retail and grocery stores with large surface parking lots. Parcels designated NCMU1 require a minimum 0.25 FAR of non-residential use for mixed-use developments.
2. NCMU2: includes smaller parcels with commercial uses along streets, which are ideal for mixed-use development. Parcels designated NCMU2 require a minimum of 0.1 FAR of commercial use, primarily on the ground floor with residential units above.
3. NCMU3: includes parcels that are less suitable for commercial use, such as those located on secondary streets, lacking street frontages, or adjacent to residential zones. NCMU3 would allow commercial, mixed-use, or residential-only development with no minimum commercial requirement.

The proposed TC Zones are:

1. TC1: includes some successful big box retail centers with long-term leases with large surface parking lots. Parcels designated TC1 require a minimum 0.35 FAR of non-residential use for mixed-use developments.
2. TC2: includes smaller parcels with commercial uses along streets, which are ideal for mixed-use development. Parcels designated TC2 require a minimum of 0.1 FAR of commercial use, primarily on the ground floor with residential units above.

3. TC3: includes parcels that are less suitable for commercial use, such as those located on secondary streets, lacking street frontages, or adjacent to residential zones. TC3 would allow commercial, mixed-use, or residential-only development with no minimum commercial requirement.

Furthermore, the HOD recommends a reduction in parking and open space requirements, aiming to enhance project feasibility. These proposed adjustments align with the overarching goals of the General Plan, specifically focusing on revitalizing aging shopping centers and fostering the creation of dynamic mixed-use neighborhoods.

Plan and Policy Overview

Milpitas General Plan 2040

The City of Milpitas adopted its General Plan 2040 in March 2021, outlining goals and policies to shape the future development of the city. The General Plan prioritizes the preservation of existing neighborhoods, channeling new housing growth to specific areas, and revitalizing some of the older neighborhood-serving commercial land use designations such as the NCMU and TWC.

Relevant General Plan goals and policies related to NCMU and TWC include:

Goal LU-1: Accommodate a well-balanced mix of land uses that meet the diverse needs of Milpitas residents, businesses, and visitors with places to live, work, shop, be entertained and culturally enriched.

Goal LU-6: Support commercial centers that serve residential neighborhoods and provide for a variety of convenient, successful and attractive commercial uses throughout the city.

> *Policy LU 6-1 Ensure new development in Neighborhood Commercial Mixed Use (NCMU) areas includes adequate commercial components to retain commercial uses as the dominant use type, and that the redevelopment of aging centers results in no net loss of viable commercial space. The City Council may consider opportunities to waive commercial requirements in mixed use areas for 100% affordable projects that increase the affordable housing stock within Milpitas for "very low income" and "low income" categories.*
>
> *Policy LU 6-4 Maintain viable neighborhood-serving commercial uses throughout the City in order to serve surrounding neighborhoods and minimize vehicle miles traveled. Encourage a diverse mix of commercial uses including retail, service, office, entertainment, and assembly uses.*
>
> *Policy LU 6-5 Promote reinvestment in strip commercial and shopping centers and maintain, revitalize, and redevelop aging and underperforming centers.*
>
> *Policy LU 6-6 Encourage redevelopment and intensification of mixed-use areas by allowing stand-alone vertical mixed-use, or integrated horizontal mixed-use projects in mixed use areas, consistent with the Land Use Map and policies and actions included in this element.*

While the General Plan designates the NCMU and TWC areas as mixed-use, the restrictive relationship between the non-residential and residential densities makes redevelopment in these areas unlikely to be feasible in practice. This limitation necessitates a critical review of the General Plan's definitions. The

HOD project reexamines these definitions and proposes a General Plan amendment to align them with the evolving needs and goals of the community.

Milpitas Housing Element 2023-2031

In January 2023, the City of Milpitas approved its 6th Housing Element, which outlines programs and actions the City will undertake to fulfill its regional housing growth obligations (RHNA). In the current RHNA cycle (2023-2031), the City of Milpitas has been allocated 6,713 units, which is more than double the allocation from the previous cycle. Furthermore, 3,786 of the units must be affordable (i.e., below market rate) with 2,655 of those units at the low- or very-low-income affordability level, which the City has historically struggled to provide.

Relevant Housing Element goals and policies related to NCMU and TWC include:

Goal HE-3: Continually assess the barriers to new housing production and proactively mitigate the governmental constraints to new housing development.

> *Policy HE 3.3: Implement recommendations in the Housing Opportunity Zone (HOZ) study to reduce barriers to new affordable housing production, while balancing the need for convenient neighborhood-serving retail stores and services for existing and future residents.*
>
> *Policy HE 3.7: Support the adaptive reuse, renovation, conversion, or redevelopment of economically underutilized properties or buildings for residential or mixed-use development.*

The Housing Element identified the existing General Plan definitions of NCMU and TWC as restrictive and as potential barriers to new housing development. The NCMU designation also falls short of the minimum density threshold deemed effective for contributing to low-income housing, as stipulated by the Housing and Community Development (HCD) department guidelines to accommodate RHNA in the Housing Element. To overcome this constraint, the Housing Element identified an action to establish Housing Opportunity Districts with higher residential densities, flexible commercial and development requirements, and incentives for affordable housing.

Comprehensive Zoning Code Update

In order to implement the General Plan, the city must update its zoning to ensure consistency with the land use designations.

In 2023, the City of Milpitas launched a separate effort to comprehensively update the Zoning Ordinance. This Zoning update will not only implement the changes in the General Plan but also ensure compliance with recent state laws aimed at fostering the production and preservation of housing throughout California. The new NCMU and updated TC zoning and development standards will be, adopted separately, and later integrated withing the citywide zoning code update..

Other Relevant Documents

The City of Milpitas adopted the Metro Specific Plan in March 2023 and is currently preparing an update to the Gateway/Main St. Specific Plan. These Specific Plans allow higher residential densities and a mix of commercial uses to create complete neighborhoods near transit stops. The City also approved its Objective Design Standards (ODS) in December 2022 which apply to all new residential and mixed-use developments in the City of Milpitas including projects in the NCMU and TC zones.

Community Engagement and Outreach

The consultant team performed outreach during various phases of the HOD project. The team with support from City staff focused outreach efforts citywide and locally around each of the NCMU and TC planning areas. The community engagement was conducted in two distinct phases: initially, at the project's outset, efforts were focused on creating awareness about the project through factsheets and conducting stakeholder interviews to gain insights into challenges related to housing construction. Subsequently, during the second half, the team produced informational videos to present the draft NCMU and TC zone recommendations to the community and facilitated focus group discussions with stakeholders. The valuable inputs gathered during these engagements were incorporated into the final draft of the zoning standards. A concise summary of these engagement efforts is provided below.

Factsheets

The consultant team prepared factsheets for both NCMU and TWC designations, explaining the project goals and what the HOD project aimed to achieve. These factsheets were made publicly accessible on the city website and distributed at various events throughout the city.

Stakeholder Interviews

The team conducted stakeholder interviews at two critical junctures in the project. Initially, interviews were focused on understanding the goals and challenges faced by stakeholders in housing development. Subsequently, stakeholders were engaged to present and gather feedback on draft changes to zoning and development standards. This approach extended to participation in the Community Development Roundtable. Engaged stakeholders included market-rate housing developers, affordable housing developers, and property owners.

Video presentation and survey

Recognizing the technical nature and limited geographic scope of the project, the team produced a series of informative videos outlining the project's intricacies and presenting draft recommendations. The videos were published on the city website and were followed by an open-ended survey asking the viewers to give feedback on the draft recommended standards for the NCMU and TC areas. (link to videos)

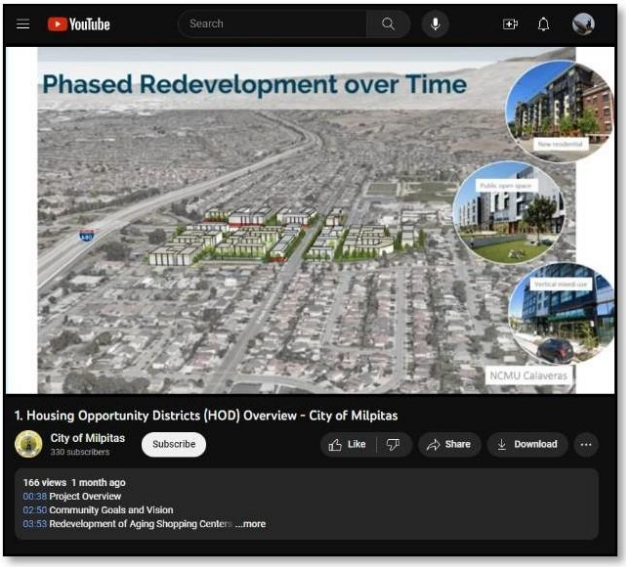

Pop-up Stations

Four dedicated pop-up events were hosted by the City, one at each location, which allowed City staff an opportunity to explain the project in person. Visitors, business owners, and property owners were directed to watch the informative videos and take part in the survey to provide feedback.

Planning Commission and City Council

The consultant team actively engaged with the City Council in August 2022 and October 2023 to present the analyses and draft recommendations. The project's progress will also shared with the Planning Commission.

Geographic Context

Neighborhood Commercial Mixed-Use

The Neighborhood Commercial Mixed-Use or NCMU land use designation covers many of the smaller aging shopping centers around the City. The map in Figure 1 identifies three NCMU locations along Dixon Road in the North, Calaveras Blvd in the center, and Landess Ave in the south.

Dixon Road currently hosts a diverse array of establishments, including restaurants, storage facilities, a gas station, the Lion supermarket, and some vacant parcels, along with surface parking. Calaveras Blvd. hosts the Ocean supermarket, Executive Inn hotel, restaurants, a smaller shopping center, vacant parcels, an event center, and surface parking. Meanwhile, Landess Avenue features banks, supermarkets, gas stations, Bowlero, storage facilities, restaurants, and surface parking.

Overall, these areas exhibit a high potential for redevelopment into mixed-use communities with neighborhood-serving retail and amenities to enhance the overall community experience.

Existing uses in NCMU

Figure 1: NCMU and TC areas in the city

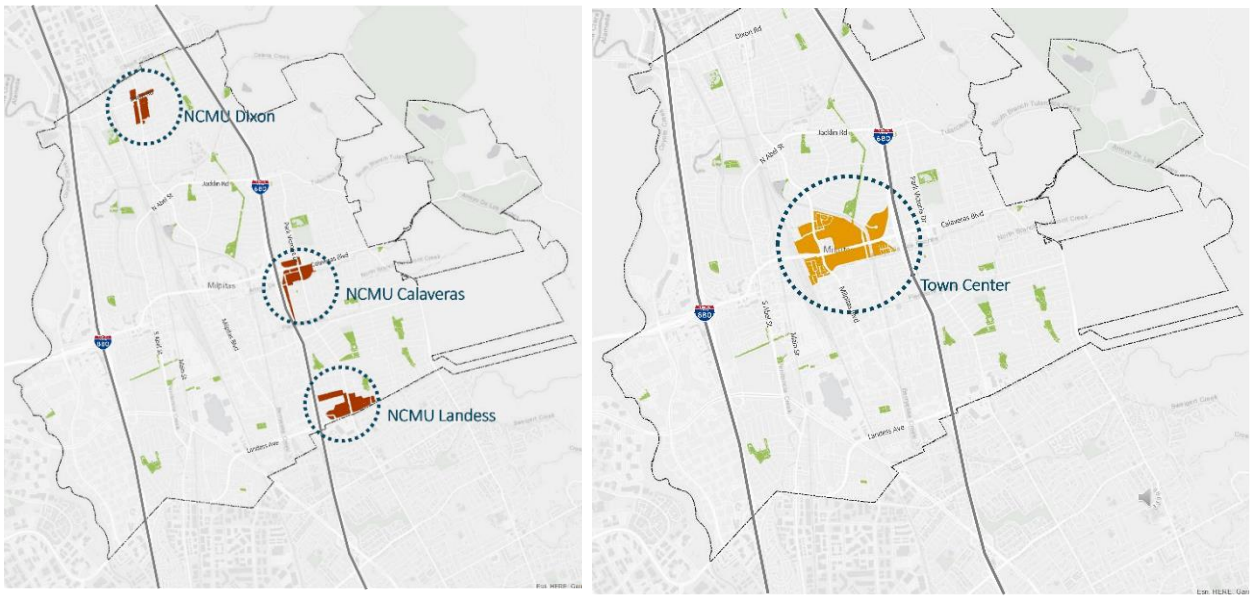

Town Center

The Town Center includes the commercial areas north and south of Calaveras Boulevard in the heart of the city. Currently, the Town center hosts multiple supermarkets, smaller shopping centers, restaurants, banks, professional offices, gas stations, cultural amenities, and surface parking lots. While certain well-established commercial entities are unlikely to undergo redevelopment in the near future, there is notable potential for transformation, particularly in the properties located south of Calaveras Blvd. These areas present an opportunity for mixed-use development with additional housing opportunities and neighborhood-serving retail and amenities.

Existing uses in Town Center

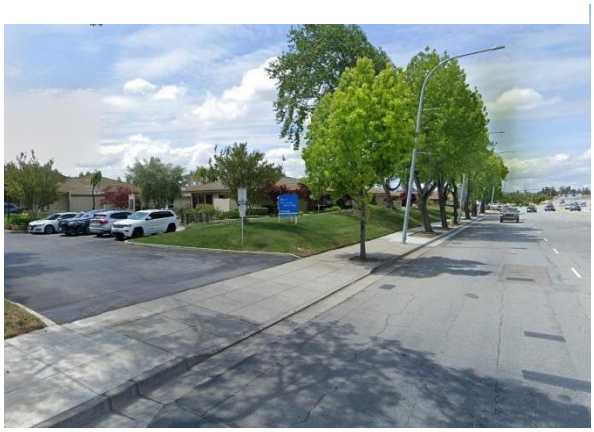

Currently, the NCMU and TC areas include shopping centers and small businesses that cater to the everyday needs of the local community. However, some of the buildings are aging and have underutilized commercial spaces. They are generally characterized by large surface parking lots and few vacant parcels. Overall, these areas present opportunities for mixed-use redevelopment.

Implementing HOD Goals and Vision

Vision

The HOD envisions transforming the NCMU and TWC neighborhoods into mixed-use communities that prioritize placemaking which involves creating public spaces, supporting local businesses, improving public health, and providing amenities and housing that align with the community's goals and vision. Accordingly, the proposed zoning and development standards would allow higher residential densities within mixed-use buildings in these zones, while certain parcels will allow residential-only projects with a strong emphasis on affordable housing throughout. Additionally, the redevelopment will be complemented by streetscape and other improvements that are contextual to the local area.

As a result, the city will stand to benefit from increased revenue, heightened demand for retail services and business, additional housing options, and increased availability of amenities for residents.

Figure 2: Conceptual phased redevelopment of NCMU at Calaveras Boulevard

Neighborhood Commercial Mixed Use

The General Plan allows for up to 0.75 FAR of non-residential commercial space which can accommodate a 5-8 story office building. The designation allows for residential mixed-use projects but has a restrictive ratio on the amount of housing that is possible. The maximum density allowed is approximately 21 dwelling units per acre, but it requires that you maximize the non-residential use to get there. This density falls below the threshold (approximately 30 dwelling units per acre) deemed effective for contributing to low-income housing, as stipulated by the California Department for HCD for the Housing Element. This mix of non-residential FAR and residential density is atypical and unlikely to be feasible in practice. The designation also allows 100% affordable residential-only projects but those require approval of the City Council which also may not be consistent with State law.

Moreover, the challenge is compounded by the fact that a 0.75 commercial FAR equates to the potential construction of an 8-story office building, a scenario deemed unlikely and economically unviable within the NCMU areas. The mismatch between the prescribed density and the associated development potential underscores the need for a reassessment and adjustment of the current land use designation to better align with both housing affordability objectives and the practical realities of development in the NCMU zones.

Based on the analysis completed for this HOD project, the proposed zoning utilizes a place-based and flexible approach by establishing three distinct NCMU zones (NCMU1, NCMU2, and NCMU3), based on the parcel size, location, current use, and future potential. Each zone allows a higher residential density along with a reduced minimum non-residential FAR that will help implement the General Plan goal to increase vibrancy and incentivize the redevelopment of aging strip retail centers into new mixed-use projects.

The new NCMU zones would apply to the Dixon Road (Sunny Hills), Calaveras and North Park Neighborhood, and Landess neighborhood commercial areas, which are currently designated NCMU in the 2040 General Plan. Currently, there is no NCMU zone in the Zoning Code. Parcels designated NCMU in the General Plan are currently assigned C1 (Neighborhood Commercial), C2 (General Commercial), or MP (Industrial Park) zones of the Zoning code.

General Plan Amendment

To implement the vision outlined in the HOD, the City must undertake a General Plan amendment to refine the definition of the NCMU land use designation.

Current Definition

Below is the definition for Neighborhood Commercial Mixed Use (NCMU) from the Milpitas General Plan 2040, Page LU-6-

“The Neighborhood Commercial Mixed-Use (NCMU) designation is intended to accommodate a mix of commercial and residential uses with an emphasis on commercial activity as the primary use, and residential uses, hotel, and office development allowed on a limited basis. The NCMU designation encourages active neighborhood serving uses at the ground level, including grocery stores, specialty retail, restaurants, plazas, or walk-in personal services such as banks and salons at FARs up to 0.75.

This designation also provides opportunities for vertical or horizontal mixed-use residential development to provide for area vibrancy and to encourage the redevelopment of aging commercial centers by allowing Multifamily dwelling units at a rate of 1 unit per 1,500 square feet of new or rehabilitated neighborhood-

serving retail and commercial services. The City Council may consider the approval of residential-only projects in the NCMU land use designation, provided the project is 100% affordable to the "low" and "very low" income categories, in order to increase the stock of affordable housing in Milpitas.

Projects with a residential component are subject to additional policy direction (Policy LU 6-1) to ensure that NCMU areas continue to primarily serve surrounding neighborhoods with commercial services."

Proposed Definition (changes are *italicized* and underlined and deleted text shown as strikethrough)

The Neighborhood Commercial Mixed-Use (NCMU) designation is intended to accommodate a *vertical and horizontal* mix of commercial and residential uses with an emphasis on *neighborhood* commercial activity. Residential uses, hotel, and office development are allowed *on upper floors*. The NCMU designation encourages active neighborhood-serving uses at the ground level, including grocery stores, specialty retail, restaurants, plazas, or walk-in personal services such as banks and salons at FARs up to 0.75.

This designation provides opportunities for vertical and horizontal mixed-use residential development to provide for area vibrancy and to encourage the redevelopment of aging commercial centers by allowing multifamily dwelling units *up to 65 dwelling units per acre for mixed-use and residential only projects. Redevelopment of larger neighborhood commercial centers shall provide a minimum of 0.25 FAR of new or rehabilitated neighborhood-serving retail and commercial services. Parcels fronting major streets shall provide a minimum 0.10 FAR of neighborhood-serving retail and commercial services. Other parcels do not require any minimum non-residential FAR. The zoning map implements the NCMU zones and their locations.*

~~Multifamily dwelling units at a rate of 1 unit per 1,500 square feet of new or rehabilitated neighborhood-serving retail and commercial services. The City Council may consider the approval of residential-only projects in the NCMU land use designation, provided the project is 100% affordable to the "low" and "very low" income categories, in order to increase the stock of affordable housing in Milpitas.~~

~~Projects with a residential component are subject to additional policy direction (Policy LU 6-1) to ensure that NCMU areas continue to primarily serve surrounding neighborhoods with commercial services.~~

Proposed Zoning

To implement the vision outlined in the HOD, the NCMU land use designation will be implemented by three distinct NCMU zones defined below.

NCMU1

Areas designated NCMU1 are currently characterized by big box retail and grocery stores with large surface parking lots. The goal of NCMU1 is to preserve the commercial uses while allowing for mixed-use development. This new zone would require 0.25 minimum non-residential FAR and allow up to 65 dwelling units per acre residential density. The proposed height limit is 75 feet or 6 stories.

NCMU2

NCMU2 includes smaller parcels with commercial uses along streets, which are ideal for mixed-use development with commercial establishments on the ground floor and residential units above. This new zone would require 0.10 minimum non-residential FAR and allow up to 65 dwelling units per acre residential density. The proposed height limit is 75 feet or 6 stories.

NCMU3

NCMU3 pertains to larger parcels that are unsuitable for commercial use, such as those located on secondary streets, lacking street frontages, or adjacent to residential zones. These sites have been classified as NCMU3 and would allow for residential-only projects, without precluding commercial development. This new zone would require no minimum non-residential FAR and allow up to 65 dwelling units per acre residential density. The proposed height limit is 75 feet or 6 stories.

Table 1: Proposed NCMU Zones

	Current Zones	Proposed Zones		
	C1, C2, MP	NCMU1	NCMU2	NCMU3
Non-residential FAR	0.35 (C1) 0.5 (C2 and MP)	0.25 minimum 0.75 maximum	0.10 minimum 0.75 maximum	No minimum 0.75 maximum
Residential Density	n/a	65 du/ac	65 du/ac	65 du/ac
Height	35 feet (C1 and MP) No height maximum (C2)	75 feet or 6 stories	75 feet or 6 stories	75 feet or 6 stories

Figure 3: Proposed NCMU Zones at Calaveras Blvd

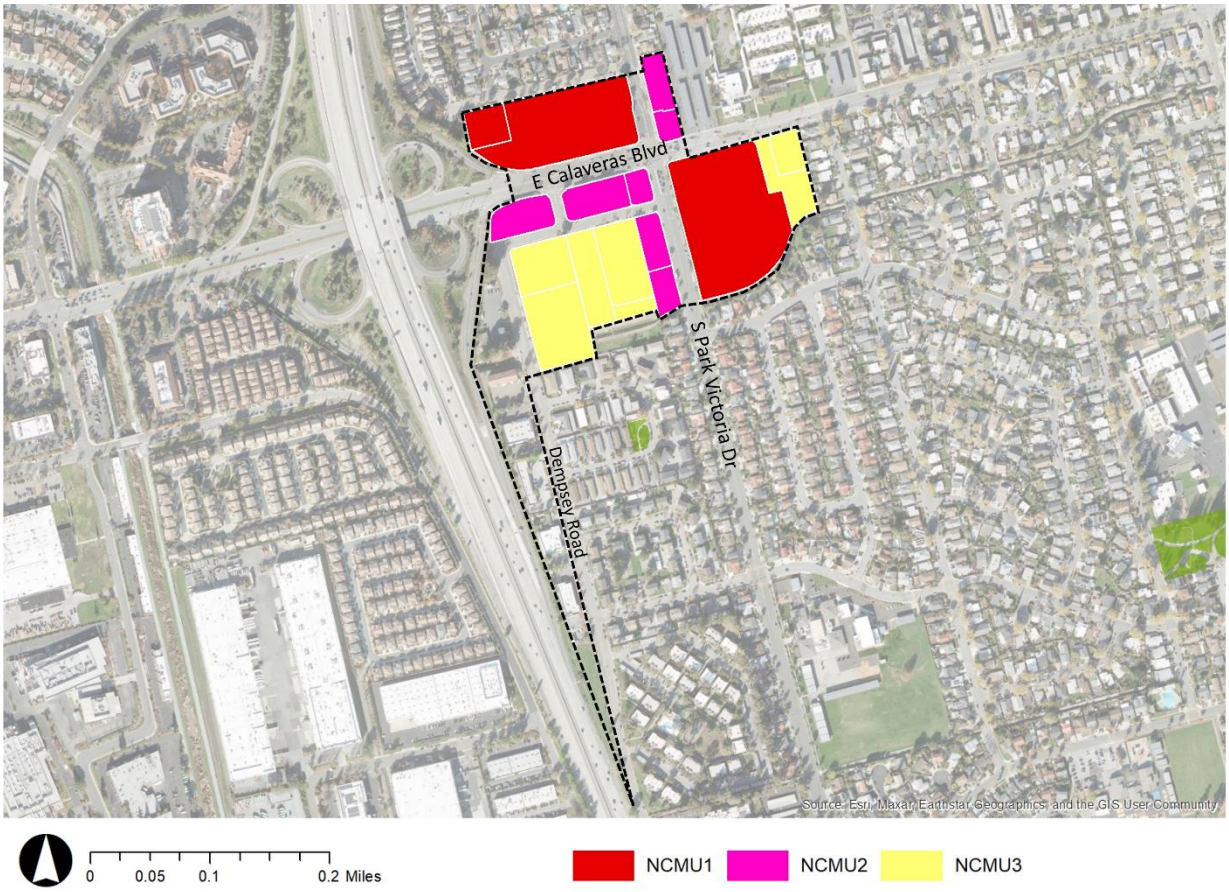

Figure 5: Proposed NCMU Zones at Landess Ave

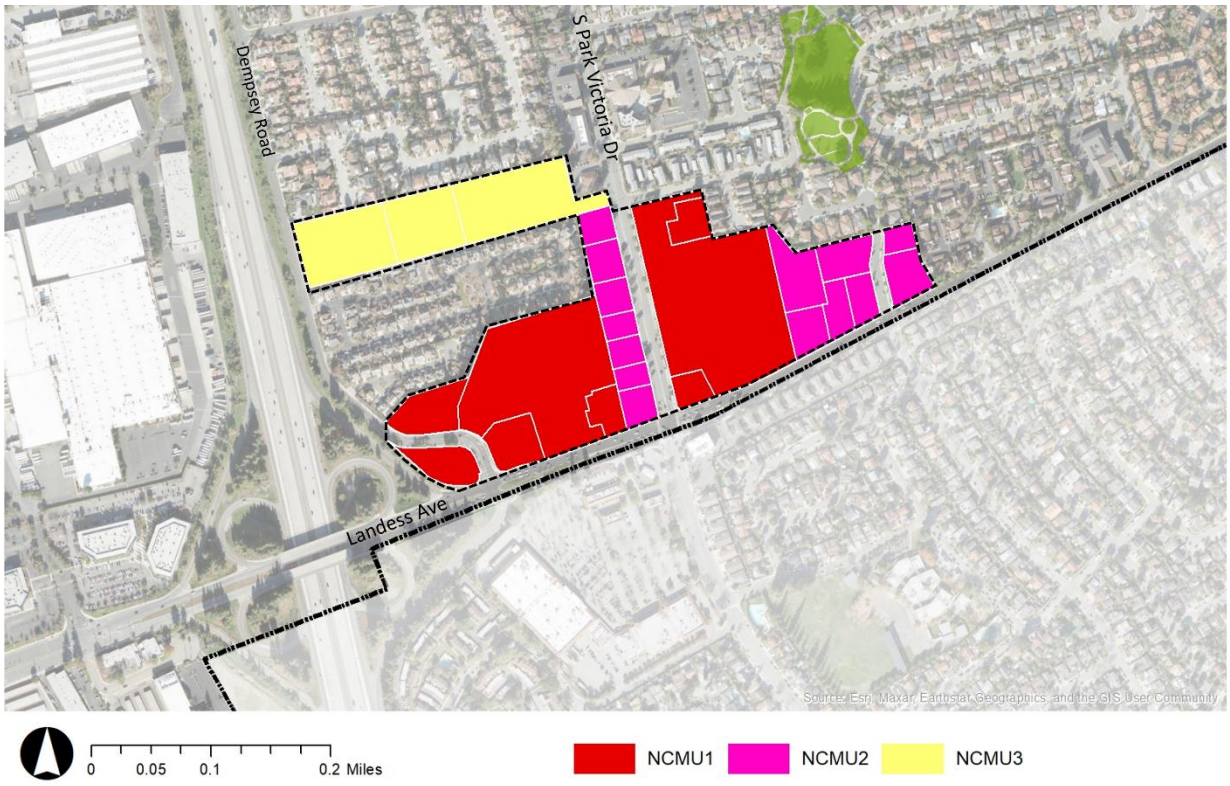

Figure 4: Proposed NCMU Zones at Dixon Rd

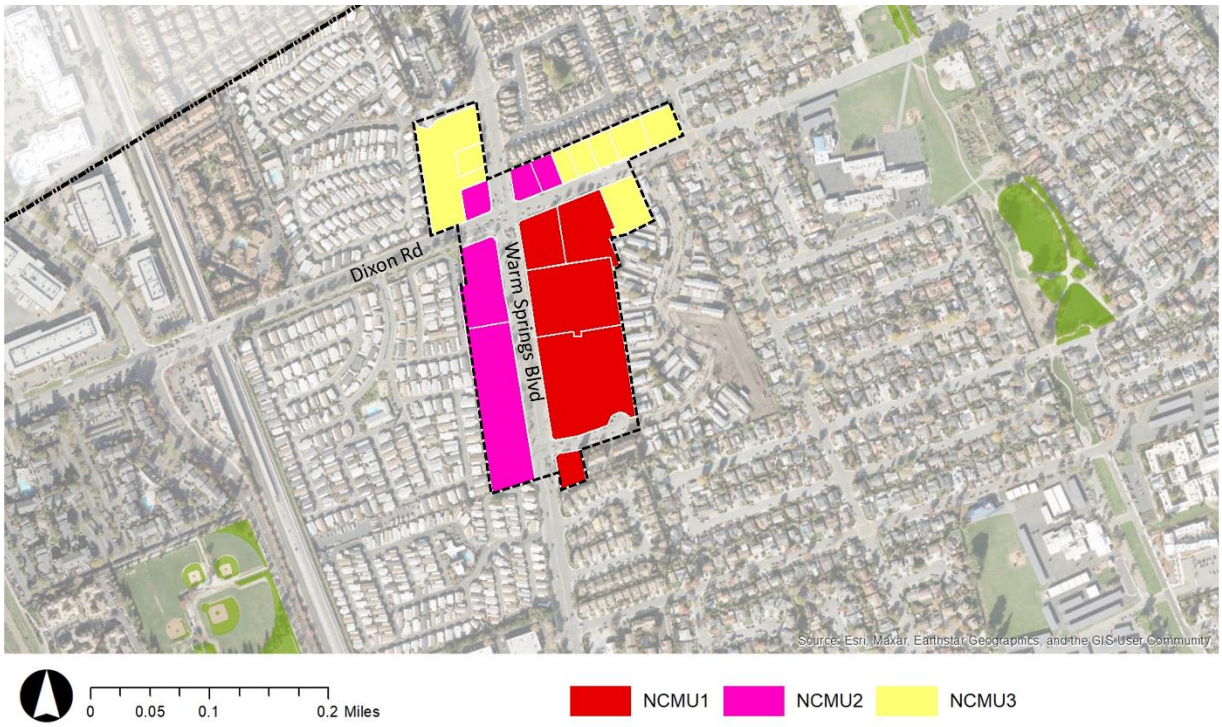

Town Center

The TWC designation of the General Plan allows for up to 40 dwelling units per acre and a FAR up to 0.85. Developers wanting to maximize the residential component of the parcel are required to provide a minimum FAR of 0.35 for the non-residential component which is higher than what is typically observed in mixed use buildings. Residential only projects are not permitted under any circumstance. The redevelopment potential of underutilized parcels in the TWC underscores the need for a reassessment and adjustment of the current TWC land use designation.

Similar to the NCMU areas, the proposed zoning utilizes a place-based and flexible approach by establishing three distinct Town Center zones (TC1, TC2, and TC3) based on their size, location, current use, and future use. While all Town Center zones would allow for a maximum density of 55 dwelling units per acre and maximum building height of 75 feet or 6 stories, each Town Center zone would provide a different minimum commercial FAR requirement.

Currently, the TWC General Plan designation corresponds to the TC zone in the zoning code. But with the updated General Plan definition, the TC zoning and development standards will be revised for the same geographic area.

General Plan Amendment

To implement the vision outlined in the HOD, the City must undertake a General Plan amendment to revise the TWC land use designation definition.

Current Definition

Below is the definition for Town Center (TWC) from the Milpitas General Plan 2040, Page LU-6-

"This designation provides for a variety of commercial, professional, civic, restaurants, hotels, residential, and entertainment uses. Projects may consist of a wholly non-residential development, or a mixed-use residential project that integrates residential and nonresidential uses vertically or horizontally. Residential-only projects are not permitted. Residential developments up to 40 units per acres may be permitted within the Town Center as part of a mixed-use development project to increase economic support for the commercial uses. Developers wanting to maximize the residential component of the parcel are required to provide a minimum FAR of 0.35 for the non-residential component. Sites developed with a mix of uses, or non-residential uses, must adhere to a FAR maximum of up to 0.85."

Proposed Definition (changes are *italicized* and underlined and deleted text shown as strikethrough)

The Town Center (TWC) designation provides for a variety of commercial, professional, civic, restaurants, hotels, residential, and entertainment uses *in a vertical and horizontal mixed-use neighborhood.* Residential developments up to *55 units per acre* are permitted within the Town Center to increase economic support to the commercial uses*. To maintain the importance of the Town Center area as a center for commercial, professional and civic uses, a minimum of 0.35 FAR of non-residential uses is required for redevelopment of major shopping centers and a minimum of 0.10 FAR of non-residential ground floor uses is required along major streets*. *All non-residential development must adhere to a FAR maximum of up to 0.85. The zoning map implements the TC zones and their locations.*

~~Projects may consist of a wholly non-residential development, or a mixed use residential project that integrates residential and nonresidential uses vertically or horizontally. Residential-only projects are not permitted. Developers wanting to maximize the residential component of the parcel are required to~~

~~provide a minimum FAR of 0.35 for the non-residential component. Sites developed with a mix of uses, or non-residential uses, must adhere to a FAR maximum of up to 0.85.~~

Proposed Zoning

To implement the vision outlined in the HOD, the TWC land use designation will be implemented by three distinct TC zones defined below.

TC1

Areas designated TC1 are currently characterized by big box retail and grocery stores with large surface parking lots. The goal of TC1 is to preserve commercial uses while allowing for mixed-use development. These include some successful shopping centers with long-term leases and are unlikely to redevelop anytime soon. This new zone would require 0.35 minimum non-residential FAR and allow up to 55 dwelling units per acre residential density. The proposed height limit is 75 feet or 6 stories.

TC2

TC2 includes smaller parcels with commercial uses along the streets, which are ideal for mixed-use development with commercial establishments on the ground floor and residential units above. This new zone would require 0.10 minimum non-residential FAR and allow up to 55 dwelling units per acre residential density. The proposed height limit is 75 feet or 6 stories.

TC3

TC3 pertains to larger parcels that are more suitable for residential-only use, such as those where property owners have expressed interest, are located on secondary streets with minimal street frontage, or are adjacent to existing residential developments. These sites have been classified as TC3 and would allow for residential-only projects, without precluding commercial development. This new zone would require no minimum non-residential FAR and allow up to 55 dwelling units per acre residential density. The proposed height limit is 75 feet or 6 stories.

Table 2: Proposed TC Zones

	Current Zones	Proposed Zones		
	TC	TC1	TC2	TC3
Non-residential FAR	0.85	0.35 minimum 0.85 maximum	0.10 minimum 0.85 maximum	No minimum 0.75 maximum
Residential Density	40 du/ac	55 du/ac	55 du/ac	55 du/ac
Height	35 feet or 3 stories 75 feet or 6 stories with CUP	75 feet or 6 stories	75 feet or 6 stories	75 feet or 6 stories

Figure 6: Proposed TC Zones

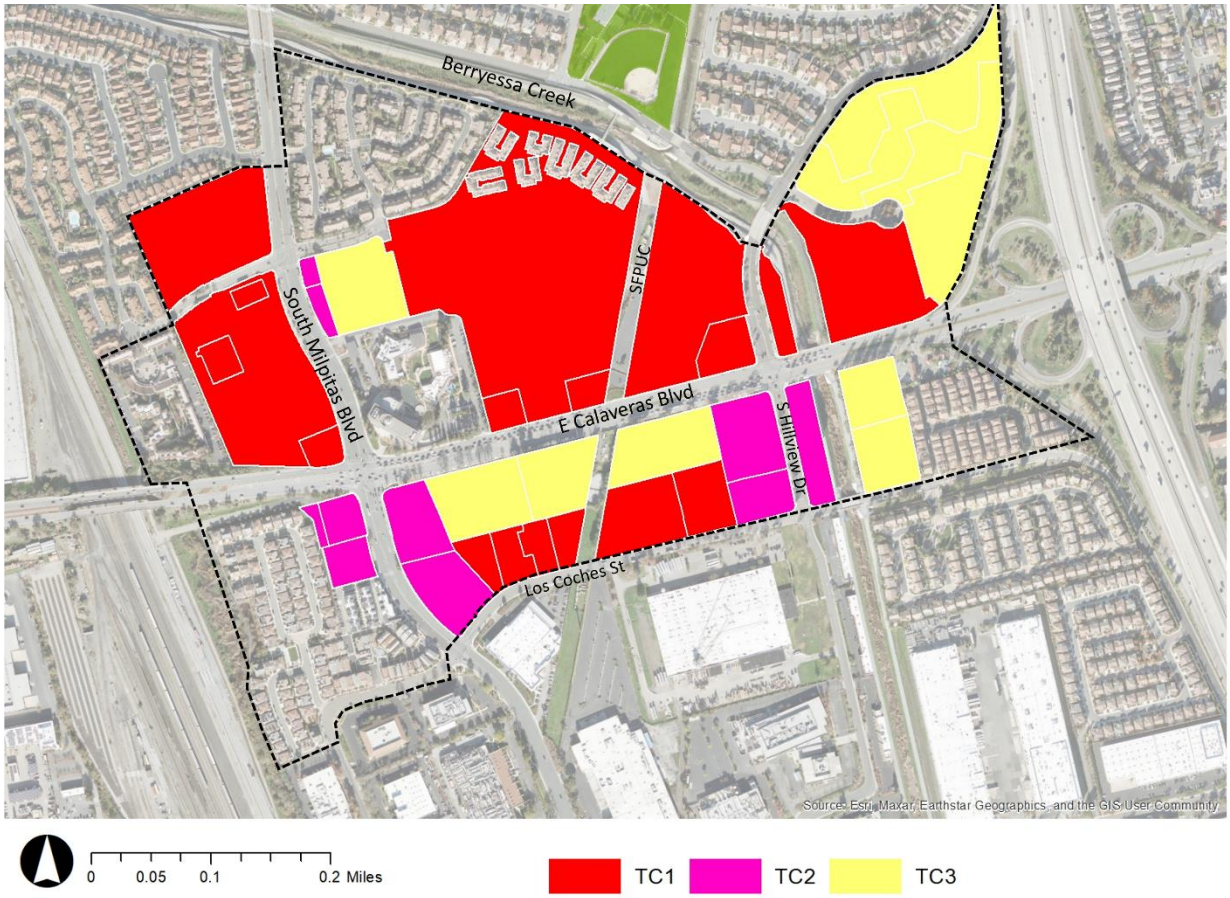

Additional Standards

Parking

Parking standards in Milpitas are generally high, except in Specific Plan areas. Accommodating a greater number of parking spaces would require substantial surface area or large structured parking garages, consequently increasing the cost of the project. Thus, to enhance the feasibility of housing development in the NCMU and TC zones, the HOD proposes a reduction in the residential parking requirement.

- Lower parking ratios will apply to areas designated NCMU and TC. For projects located in NCMU and TC
  - The number of parking spaces required for residential uses shall be 1 space per unit.
  - The number of parking spaces required for commercial use shall be 1 space per 300 square feet of commercial use.

Parks and Open Space

To allow housing or mixed-use developments in the NCMU and TC zones, the HOD recommends a reduction in the park land requirement compared to the citywide standard. Nevertheless, considering heightened population densities, it is crucial to emphasize the significance of high-quality open spaces in contributing to placemaking for both existing and future residents.

For projects located in the NCMU and TC zones, the following standards shall apply.

- **Park Land**. All residential projects in the NCMU and TC areas shall provide park land at a ratio of three and one-half (3.5) acres per one thousand (1,000) population. This is a reduction from the citywide requirement of five (5) acres per one thousand (1,000) population.
- **Publicly Accessible Parks and Open Spaces.** All mixed-use or residential-only projects on sites between 3 acres and 5 acres shall dedicate 5% of total site area to publicly accessible parks and open space. All mixed-use or residential-only projects greater than 5 acres shall dedicate 10% of total site area to publicly accessible parks and open space. Publicly accessible parks and open spaces provided to meet the requirement below may be counted towards the park land requirement above.
- **Usable Open Space.** A minimum of twenty-five percent (25%) of the total site shall be usable open space or recreational facilities. Usable open space may be provided as Common Open Space or Private Open Space.

Conclusion

This place-based and practical land-use approach to the NCMU areas and Town Center would allow for mixed-use redevelopment and more market-rate and affordable housing. It would implement the General Plan goals, revive aging shopping centers, and increase housing supply in the City. Additionally, increased housing would increase the demand for retail businesses. Overall, the HODs would also result in a net increase in the City's total revenue, which is further discussed below.

Fiscal analysis

Seifel Consulting was retained by the City of Milpitas to perform a fiscal analysis regarding proposed land use changes that would allow additional residential development to occur within the Town Center (TC) and Neighborhood Commercial Mixed-use (NCMU) zones. This analysis investigates the contribution of NCMU and TC areas to the overall sales tax revenues in the City, assessing the potential impact of the zoning updates on the City's sales tax revenue. Additionally, the study analyzes a prototypical redeveloped site within the NCMU, evaluating the cost-to-revenue ratio in various NCMU scenarios to provide insights into the financial implications of such redevelopment.

Sales Tax Revenues from HODs

Based on an evaluation of existing sales tax revenues in the City, the study highlighted that TC and NCMU areas only represent 9% of total City Sales Tax Revenue currently- with TC accounting for 3% and NCMU accounting for 6%. Overall, Sales Tax revenue is only about 30% of general fund revenues and the NCMU and TC zones only account for a small portion of that revenue category.

Figure 7: Proportion of Annual Sales Tax Revenue (2022), City of Milpitas

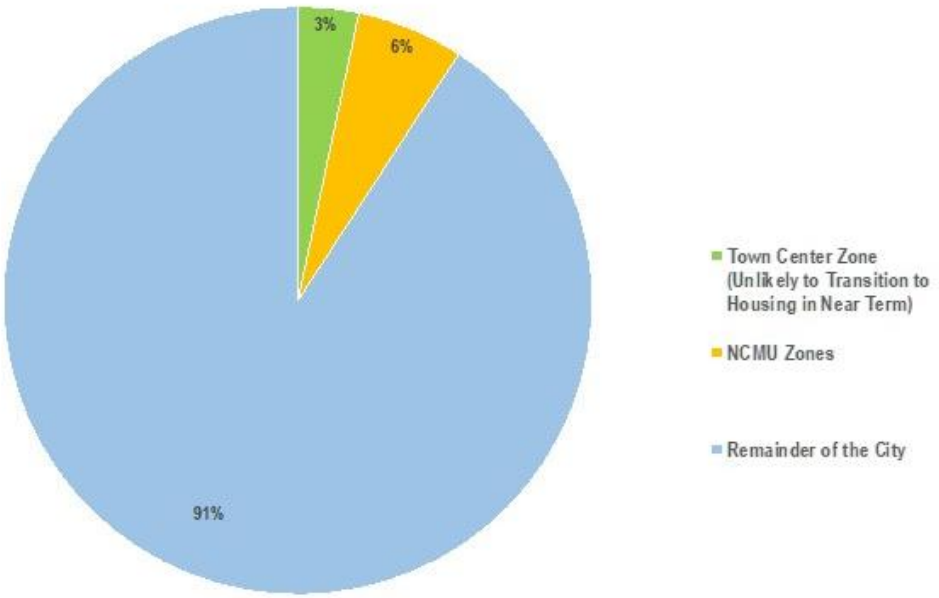

Fiscal Impact for Typical HOD Redevelopment Opportunity

The potential fiscal impact was analyzed by evaluating alternative development scenarios for a typical property in the NCMU zone because several properties within this area are currently underutilized and have vacant commercial space. The fiscal analysis evaluated what could occur if a typical property were to be redeveloped to include housing.

The key findings of the analysis are below:

- If no zoning changes are made, no redevelopment is likely as the current General Plan commercial to residential ratios are infeasible.

- Even with the implementation of a place-based strategy, which maintains a robust minimum commercial floor area requirement for much of the HODs, only small portions of the HODs are likely to redevelop in the near future.
- Projected total General Fund revenues from new development is anticipated to exceed the total fiscal costs of providing services to future residents and employees for each of the development scenarios. This analysis indicates that new infill mixed-use and residential development is likely to have a positive fiscal impact on the City of Milpitas.

Figure 8: Potential Fiscal Impact from Typical HOD Development opportunity in FY 2022/23 Constant Dollars

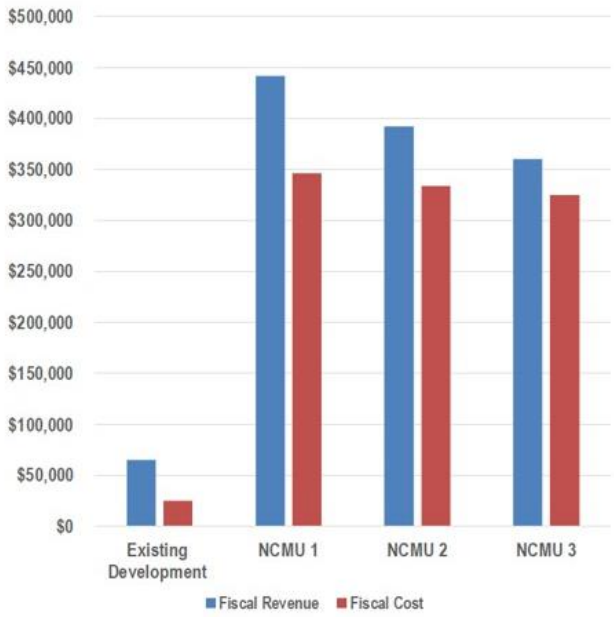

Next Steps

General Plan Amendment

The proposed zoning change will require a General Plan Amendment to update the definitions of NCMU and TWC land use designations. The proposed language of the updated definitions in the General Plan Amendment is included in this memo.

EIR Consistency Memo/Addendum

The EIR Consistency Memo/Addendum analyzes the proposed zoning and its potential impact on the environment compared to the scenario analyzed as part of the General Plan EIR. The HOD would not result in new impacts not addressed or analyzed in the General Plan EIR nor present new information that indicates that impacts would be more significant than those described in the General Plan EIR. Therefore, the impacts of the HOD would be within the scope of the General Plan EIR and no additional environmental assessment of aesthetics is required.

Integrate Zoning within Citywide Zoning Update

Once approved, the proposed zoning updates, both map and text edits, for the NCMU and TC zones will be integrated into the citywide zoning code.

Appendix B: Renderings of Phased Implementation

NCMU at Calaveras Boulevard Phase 1

NCMU at Calaveras Boulevard Phase 2

NCMU at Calaveras Boulevard Phase 3

NCMU at Calaveras Boulevard Phase 4

NCMU at Landess Ave Phase 1

NCMU at Landess Ave Phase 2

NCMU at Landess Ave Phase 3

NCMU at Landess Ave Phase 4

NCMU at Dixon Landing Phase 1

NCMU at Dixon Landing Phase 2

NCMU at Dixon Landing Phase 3

NCMU at Dixon Landing Phase 4

Town Center Phase 1

Town Center Phase 2

Town Center Phase 3

Town Center Phase 4

Housing Opportunity District Project

Addendum to the Milpitas General Plan 2040 EIR

State Clearinghouse #2020070348

prepared by

City of Milpitas
Department of Planning and Neighborhood Services
455 East Calaveras Boulevard
Milpitas, California 95035
Contact: Avery Stark, Senior Planner

prepared with the assistance of

Rincon Consultants, Inc.
449 15th Street, Suite 303
Oakland, California 94612

April 2024

RINCON CONSULTANTS, INC. SINCE 1994

Housing Opportunity District Project

Addendum to the Milpitas General Plan 2040 EIR

State Clearinghouse #2020070348

prepared by

City of Milpitas
Department of Planning and Neighborhood Services
455 East Calaveras Boulevard
Milpitas, California 95035
Contact: Avery Stark, Acting Senior Planner

prepared with the assistance of

Rincon Consultants, Inc.
449 15th Street, Suite 303
Oakland, California 94612

April 2024

RINCON CONSULTANTS, INC.
Environmental Scientists | Planners | Engineers
rinconconsultants.com

Table of Contents

1 Introduction and Project Description 1
1.1 Project Title 1
1.2 Lead Agency/Project Sponsor Name and Address 1
1.3 Contact Person and Phone Number 1
1.4 Project Location 1
1.5 Project Background 3
1.6 Project Description 5
1.7 Discretionary Action 14
1.8 Prior Environmental Document(s) 14
1.9 Location of Prior Environmental Document(s) 14
2 Overview of CEQA Guidelines Section 15164 and Section 15162 15
3 Environmental Effects and Determination 17
3.1 Environmental Areas Determined to Have New or Substantially More Severe Significant Effects Compared to Those Identified in the Previous EIR 17
3.2 Determination 18
4 Addendum Evaluation 19
4.1 Aesthetics 19
4.2 Agriculture and Forestry Resources 20
4.3 Air Quality 20
4.4 Biological Resources 21
4.5 Cultural Resources 22
4.6 Energy 23
4.7 Geology and Soils 24
4.8 Greenhouse Gas Emissions 25
4.9 Hazards and Hazardous Materials 26
4.10 Hydrology and Water Quality 26
4.11 Land Use and Planning 27
4.12 Mineral Resources 28
4.13 Noise 28
4.14 Population and Housing 29
4.15 Public Services 30
4.16 Recreation 32
4.17 Transportation/Traffic 32
4.18 Tribal Cultural Resources 34
4.19 Utilities and Service Systems 35
4.20 Wildfire 36

5 Summary of Findings 38
6 References 39
6.1 Bibliography 39
6.2 List of Preparers 39

Tables

Table 1 Summary of Areas of Potential Impact under the General Plan EIR 3
Table 2 NCMU Zone Development Standards 6
Table 3 TC Zone Development Standards 7
Table 4 Buildout Compared to General Plan EIR 8

Figures

Figure 1 Regional Project Location 2
Figure 2 NCMU Calaveras Blvd Likely Redevelopment Scenario 9
Figure 3 NCMU Landess Ave I Likely Redevelopment Scenario 10
Figure 4 NCMU Landess Ave II Likely Redevelopment Scenario 11
Figure 5 NCMU Dixon Road Likely Redevelopment Scenario 12
Figure 6 TWC Likely Redevelopment Scenario 13

This page intentionally left blank.

1 Introduction and Project Description

1.1 Project Title

City of Milpitas Housing Opportunity District Project

1.2 Lead Agency/Project Sponsor Name and Address

City of Milpitas
455 East Calaveras Boulevard
Milpitas, California 95035

1.3 Contact Person and Phone Number

Avery Stark
Acting Senior Planner
City of Milpitas
astark@milpitas.gov
(408) 586-3288

1.4 Project Location

The city of Milpitas is located in Santa Clara County, approximately 28 miles east of the Pacific Ocean and 38 miles southeast of San Francisco. The city is located north and east of the city of San Jose, and south of the city of Fremont. Much of the city is situated between two major freeways (Interstate 880 [I-880] and Interstate 680 [I-680]), State Route 237, and a County expressway. The project area is within Milpitas's city limits, which as shown in Figure 1.

Figure 1 Regional Project Location

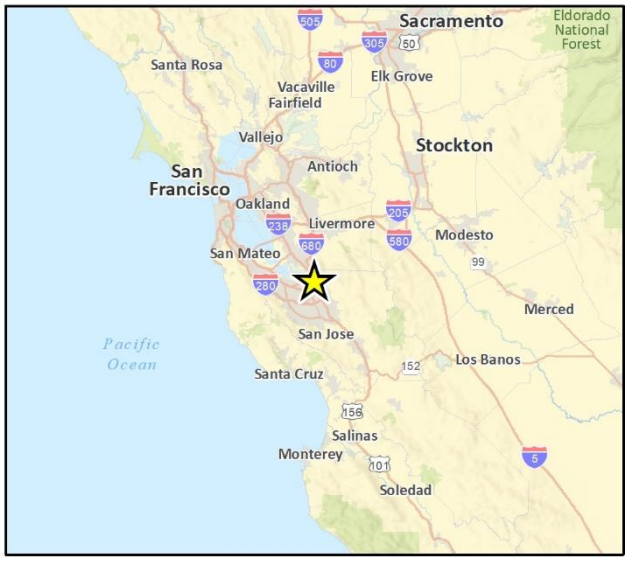

1.5 Project Background

In September 2020, the City of Milpitas applied for Local Early Action Planning Grant funding to establish Housing Opportunity Districts (HODs) in priority areas outlined in its General Plan. HODs are designed to incentivize housing by allowing increased density, relaxed standards, streamlined permitting processes, and financial support for affordable housing. The proposed project plays a critical role in implementing both the General Plan and the Housing Element to increase housing in the city while creating vibrant mixed-use neighborhoods.

Milpitas General Plan 2040 and EIR

The City of Milpitas adopted its General Plan 2040 in March 2021, outlining goals and policies to shape the future development of the city. The General Plan prioritizes the preservation of existing neighborhoods, channeling new housing growth to specific areas, and revitalizing some of the older neighborhood-serving commercial land use designations, including the Neighborhood Commercial Mixed-Use (NCMU) and Town Center (TWC). While the General Plan designates the NCMU and TWC areas as mixed-use, a less restrictive relationship between the non-residential and residential densities makes redevelopment in these areas more feasible in practice. This limitation necessitates a critical review of the General Plan's definitions. The HOD project reexamines these definitions and proposes a General Plan amendment to align them with the evolving needs and goals of the community.

The City's General Plan underwent extensive environmental review in the form of an Environmental Impact Report (EIR), which was certified in 2021. The City of Milpitas General Plan Update EIR (herein called the General Plan EIR) addressed the potential environmental effects of the planned buildout of Milpitas through the year 2040 and concluded that implementation of the General Plan would result in various levels of environmental impacts as detailed in Table 1. Mitigation measures were incorporated into the General Plan EIR to reduce potential impacts from development under the General Plan.

Table 1 Summary of Areas of Potential Impact under the General Plan EIR

Issue Area	Level of Significance after Mitigation	Mitigation Proposed in the General Plan EIR
Aesthetics	Less than Significant	None
Agricultural and Forest Resources	Less than Significant	None
Air Quality	Less than Significant	None
Biological Resources	Less than Significant	None
Cultural and Tribal Cultural Resources	Less than Significant	None
Geology	Less than Significant	None
Greenhouse Gases, Climate Change, and Energy	Less than Significant	None
Hazards and Hazardous Materials	Less than Significant	None
Hydrology and Water Quality	Less than Significant	None
Land Use Planning and Population/Housing	Less than Significant	None
Mineral Resources	Less than Significant	None

Issue Area	Level of Significance after Mitigation	Mitigation Proposed in the General Plan EIR
Noise	Significant and Unavoidable	Mitigated to the extent feasible through General Plan policies and actions. No additional feasible mitigation is available.
Public Services and Recreation	Less than Significant	None
Transportation	Significant and Unavoidable	Mitigated to the extent feasible through General Plan policies and actions. No additional feasible mitigation is available.
Utilities and Service Systems	Less than Significant	None
Wildfire	Less than Significant	None
Cumulative/Other CEQA-Required Topics	Significant and Unavoidable	Mitigated to the extent feasible through General Plan policies and actions. No additional feasible mitigation is available.

General Plan Assumptions

The General Plan buildout analysis assumes a 20-year horizon, and 2040 is assumed to be the buildout year of the General Plan. The General Plan is intended to accommodate future growth in Milpitas, including new businesses, expansion of existing businesses, and new residential uses.

As detailed in the General Plan EIR in Table 2.0-2 on Page 2.0-16, at full buildout the proposed General Plan could accommodate a total of up to 33,401 housing units, a population of 113,530 people, 47,737,536 square feet of non-residential building square footage, and 84,333 jobs within the General Plan planning area. As shown in Table 2.0-2 of the General Plan EIR, this represents development growth over existing conditions of up to 11,186 new housing units, 37,473 people, 19,729,648 square feet of new non-residential building square footage and 36,795 jobs.

Milpitas Housing Element 2023-2031

In January 2023, the City of Milpitas approved its 6th Cycle Housing Element, which outlines programs and actions the City intends to undertake to fulfill its regional housing growth obligations (RHNA). In the current RHNA cycle (2023-2031), the City of Milpitas has been allocated 6,713 units, which is more than double the allocation from the previous cycle. Furthermore, 3,786 of the units are planned to be affordable (i.e., below market rate) with 2,655 of those units at the low- or very-low-income affordability level.

The Housing Element identified the existing General Plan land use designations of NCMU and TWC as restrictive and potential barriers to new housing development. The NCMU designation was determined to fall short of the minimum density threshold deemed effective for contributing to low-income housing, as stipulated by the Housing and Community Development Department guidelines to accommodate the RHNA in the Housing Element. To overcome this constraint, the Housing Element identified an action to establish Housing Opportunity Districts with higher residential densities, flexible commercial and development requirements, and incentives for affordable housing.

Comprehensive Zoning Code Update

In order to implement the General Plan, the City is required to update its zoning as appropriate to ensure consistency with the land use designations. In 2023, the City of Milpitas launched an effort to comprehensively update the Zoning Ordinance. This update will not only address the changes in the

General Plan but also ensure compliance with recent state laws aimed at fostering the production and preservation of housing throughout California. The updated NCMU and TC zoning and development standards will be integrated into the citywide zoning code update to ensure consistency.

1.6 Project Description

The City of Milpitas Housing Opportunity District project, herein referred to as “project” or “HOD”, would involve amending the General Plan and zoning standards for the NCMU and TWC land use designations to allow for increased residential development and decreased non-residential development. The HOD envisions transforming the NCMU and TWC neighborhoods into mixed-use communities, which would involve creating public spaces, supporting local businesses, improving public health, and providing amenities and housing that align with the community's goals and vision. Accordingly, the proposed zoning and development standards would allow higher residential densities within mixed-use buildings in these zones, while allowing residential-only projects on certain parcels with a strong emphasis on affordable housing throughout. The envisioned buildout would be complemented by streetscape and other improvements that are contextual to the local area.

NCMU Designation

Through the 2021 General Plan Update, the City established a new NCMU designation. The NCMU consists of approximately 140 acres within the City of Milpitas General Plan Planning Area. This designation is intended to accommodate a mix of commercial and residential uses with an emphasis on neighborhood commercial activity. It is intended that neighborhood-serving active uses such as grocery stores, retail, restaurants, and personal services at the ground level will help create a pedestrian-oriented streetscape and public spaces.

The current General Plan designation for the NCMU allows residential uses, hotel, and office development on a limited basis. The proposed HOD would allow these uses on upper floors. Similar to the current NCMU designation, the HOD would encourage active neighborhood-serving uses at the ground level, including grocery stores, specialty retail, restaurants, plazas, or walk-in personal services such as banks and salons at FARs up to 0.75.

The current General Plan designation for the NCMU allows for either vertical or horizontal residential development. The proposed HOD would be updated to provide opportunities for both vertical and horizontal mixed-use residential development. Compared to the current designation which allows a rate of 1 unit per 1,500 square feet of new or rehabilitated neighborhood-serving retail and commercial services, the proposed HOD would allow multifamily dwelling units at up to 65 dwelling unit per acre for mixed-use and residential only projects. This is intended to provide for area vibrancy and to encourage the redevelopment of aging commercial centers. In addition, the HOD would require redevelopment of larger neighborhood commercial centers to provide a minimum of 0.25 FAR of new or rehabilitated neighborhood-serving retail and commercial services. Parcels fronting major streets would provide a minimum 0.10 FAR of neighborhood-serving retail and commercial services. Compared to the current General Plan designation, the HOD would not require any minimum non-residential FAR for parcels that allow residential only developments.

Currently, there is no NCMU zone in the Zoning Code. Parcels designated NCMU in the General Plan are currently assigned C1 (Neighborhood Commercial), C2 (General Commercial), or MP (Industrial Park) zones of the Zoning code. The new NCMU zones would apply to the Dixon Road (Sunny Hills),

Calaveras and North Park Neighborhood, and Landess neighborhood commercial areas, which are currently designated NCMU in the 2040 General Plan. Each zone allows a higher residential density along with a reduced minimum non-residential FAR that will help implement the General Plan goal to increase vibrancy and incentivize the redevelopment of aging strip retail centers into new mixed-use projects.

The proposed NCMU Zoning District is subdivided into three subdistricts:

1. **NCMU1** would allow commercial or mixed-use development with a minimum required commercial FAR of 0.25.
2. **NCMU2** would allow commercial or mixed-use development with a minimum required commercial FAR of 0.1.
3. **NCMU3** would allow commercial, mixed use, or residential only development with no minimum commercial FAR. NCMU3 includes parcels that are less suitable for commercial use, such as those located on secondary streets, lacking street frontages, or adjacent to residential zones.

The current and proposed NCMU development standards are provided in Table 2.

Table 2 NCMU Zone Development Standards

Standards	Current Zones (C1, C2, MP)	NCMU1	NCMU2	NCMU3
Density, Minimum-Maximum Residential (Dwellings)[1]	N/A	Maximum: 65 du/ac	Maximum: 65 du/ac	Minimum: 30 du/ac Maximum: 65 du/ac
Floor Area Ratio, Non-Residential and Mixed-Use projects	0.35 (C1) 0.5 (C2 and MP)	0.25 min. 0.75 max.	0.10 min. 0.75 max.	No minimum commercial FAR 0.75 max.
Building Height	35’ (C1 and MP) No height maximum (C2)	75’ or 6 stories	75’ or 6 stories	75’ or 6 stories

[1] For NCMU3 properties, density may be averaged over contiguous parcels

TWC Designation

The TWC designation of the 2040 General Plan consists of approximately 133 acres within the City of Milpitas General Plan Planning Area. This designation provides for a variety of administrative, business, entertainment, dining, and cultural activities along with some residential uses in the geographic center of the City to suit the varying lifestyles of residents and visitors alike. The area is easily accessible via the city's transportation network.

The current TWC General Plan designation states that projects may consist of a wholly non-residential development, or a mixed-use residential project that integrates residential and nonresidential uses either vertically or horizontally. The proposed HOD would provide opportunities for both vertical and horizontal mixed-use neighborhood uses. Currently, residential-only developments are not allowed within the Town Center but residential developments of up to 40 units per acres may be permitted as part of a mixed-use development project.

Under the current General Plan, developers wanting to maximize the residential component of the parcel are required to provide a minimum FAR of 0.35 for the non-residential component. Under the proposed HOD, to maintain the importance of the Town Center area as a center for commercial,

professional and civic uses, a minimum of 0.35 FAR of non-residential uses would be required for redevelopment of major shopping centers and a minimum of 0.10 FAR of non-residential ground floor uses would be required along major streets. Similar to the current designation, all non-residential development under the HOD would be required to adhere to a FAR maximum of up to 0.85.

Currently, the TWC General Plan designation corresponds to the TC zone of the zoning code. But with the updated General Plan definition, the TC zoning and development standards would be redefined for the same geographic area. Similar to the NCMU areas, the proposed zoning utilizes a place-based and flexible approach by establishing three distinct Town Center zones (TC1, TC2, and TC3) based on their size, location, current use, and future use.

The TC zone would be subdivided into three subdistricts:

1. **TC1** would allow commercial or mixed-use development with a minimum non-residential FAR of 0.35.
2. **TC2** would allow commercial or mixed-use development with a minimum non-residential FAR of 0.1.
3. **TC3** would allow commercial, mixed-use or residential only development with no minimum commercial FAR. TC3 includes parcels that are less suitable for retail uses, such as those located on secondary streets, lacking street frontages, or adjacent to residential zones.

While all TC zones would allow for a maximum density of 55 dwelling units per acre and maximum building height of 75 feet or 6 stories, each TC zone would provide a different minimum commercial FAR requirement. The current and proposed TC development standards are provided in Table 3.

Table 3 TC Zone Development Standards

Standards	Current Zone (TC)	TC1	TC2	TC3
Density, Minimum-Maximum Residential (Dwellings)[1]	40 du/ac	Maximum: 55 du/ac	Maximum: 55 du/ac	Minimum: 30 du/ac Maximum: 55 du/ac
Floor Area Ratio, Non-Residential and Mixed-Use projects	0.85	0.35 min. 0.85 max.	0.10 min. 0.85 max.	No min. commercial FAR 0.85 max.
Building Height	35’ or 3 stories 75’ or 6 stories with conditional use permit	75’ or 6 stories	75’ or 6 stories	75’ or 6 stories

[1] For TC3 properties, density may be averaged over contiguous parcels

Buildout

The proposed zoning changes under the HOD would result in changes to the allowable number of residential units and non-residential space within the NCMU and TC zones. The likely buildout scenario for the project is based on an estimate of the realistic number of units that could occur under the HOD based on current trends that the City has observed. The likely buildout scenario was based on analysis of existing uses, site constraints, and stakeholder interviews. The likely buildout scenario factors in that housing development is mainly accomplished by the private sector and dependent on factors independent of City control, such as financial resources. The City identified

the most likely properties to redevelop in the near and medium term. For each parcel that was included in the likely development scenario, it was assumed the project minimized the amount of non-residential use on site and maximized the allowed residential buildout.

A summary of the proposed likely buildout scenario compared to the existing buildout and the buildout scenario analyzed within the General Plan EIR is shown in Table 4.

Table 4 Buildout Compared to General Plan EIR

	Non-residential space (square feet)	Residential units (du)
TWC		
Existing	1,426,803	0
General Plan EIR Buildout Assumption	1,600,000	1,064
Likely Build-out Proposed TWC from existing (change from GP EIR)	**-262,085** (Δ-0.44 million)	**+1,013** (Δ-51)
NCMU		
Existing	987,077	0
General Plan EIR Buildout Assumption	3,200,000	1,578
Likely Build-out Proposed NCMU from existing (change from GP EIR)	**-206,091** (Δ-2.4 million)	**+1,895** (Δ+317)

The analysis within this Addendum relies upon the likely buildout scenario, which would result in an overall reduction in non-residential space and an increase in residential units. As shown in Table 4, the HOD would result in a reduction of approximately 262,085 square feet of non-residential space within the TWC and 206,091 square feet in the NCMU, compared to existing conditions. In total, the HOD would result in a reduction of roughly 468,176 square feet of non-residential space compared to existing conditions across both districts. Additionally, the HOD would result in approximately 2,908 new units compared to existing conditions across both districts. Compared to the General Plan EIR, the residential buildout within the TWC would result in a reduction of 51 units and an increase of 317 units within the NCMU. Therefore, the project would result in a net increase of 266 residential units[1], and a net reduction of approximately 2,840,000 square feet of non-residential space overall compared to the General Plan EIR. The likely buildout scenario in the NCMU is shown in Figure 2 through Figure 5 and the likely buildout in the TWC is shown in Figure 6.

[1] 266 units = 317 units – 51 units

Figure 2 NCMU Calaveras Blvd Likely Redevelopment Scenario

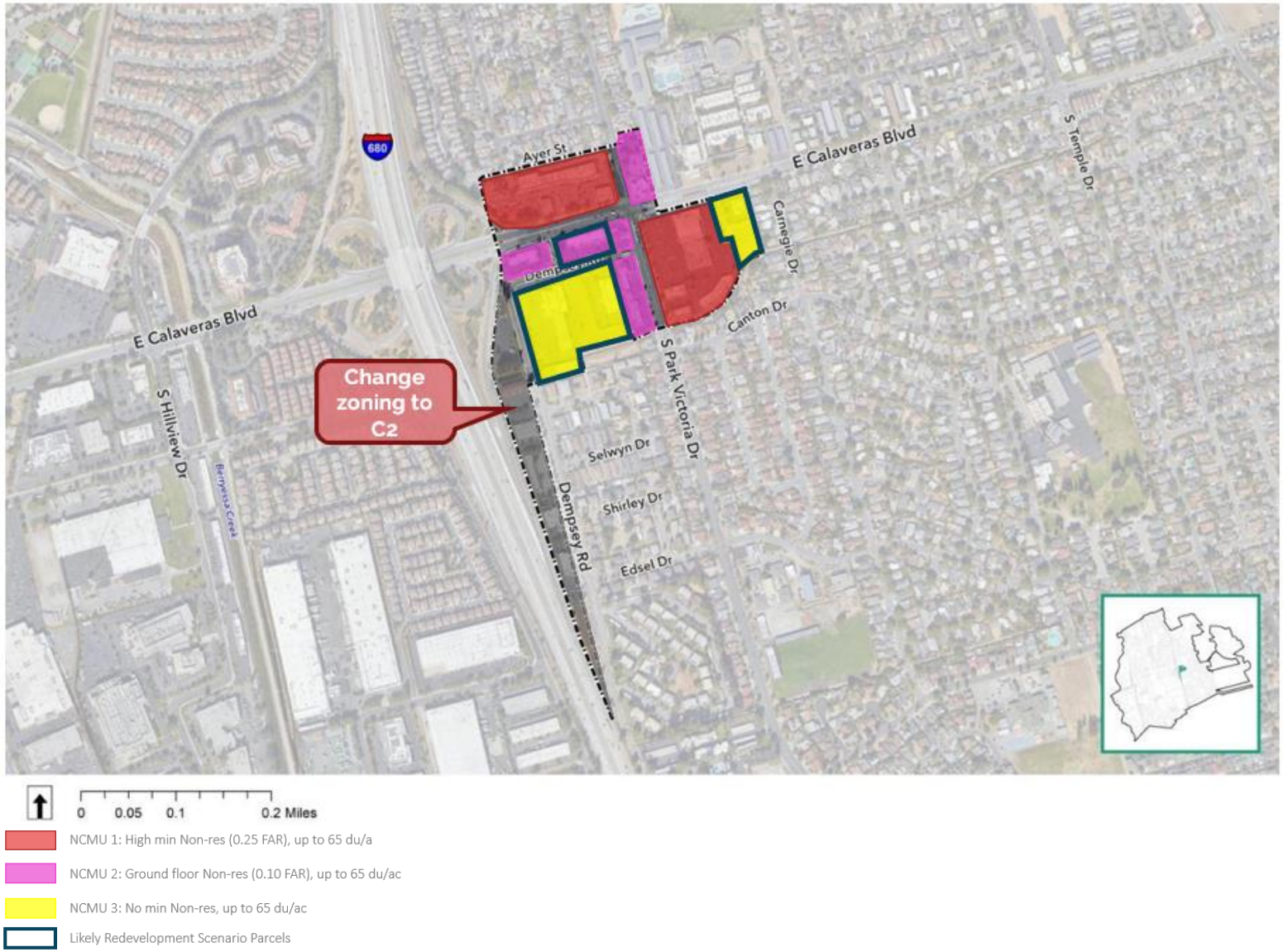

Figure 3 NCMU Landess Ave I Likely Redevelopment Scenario

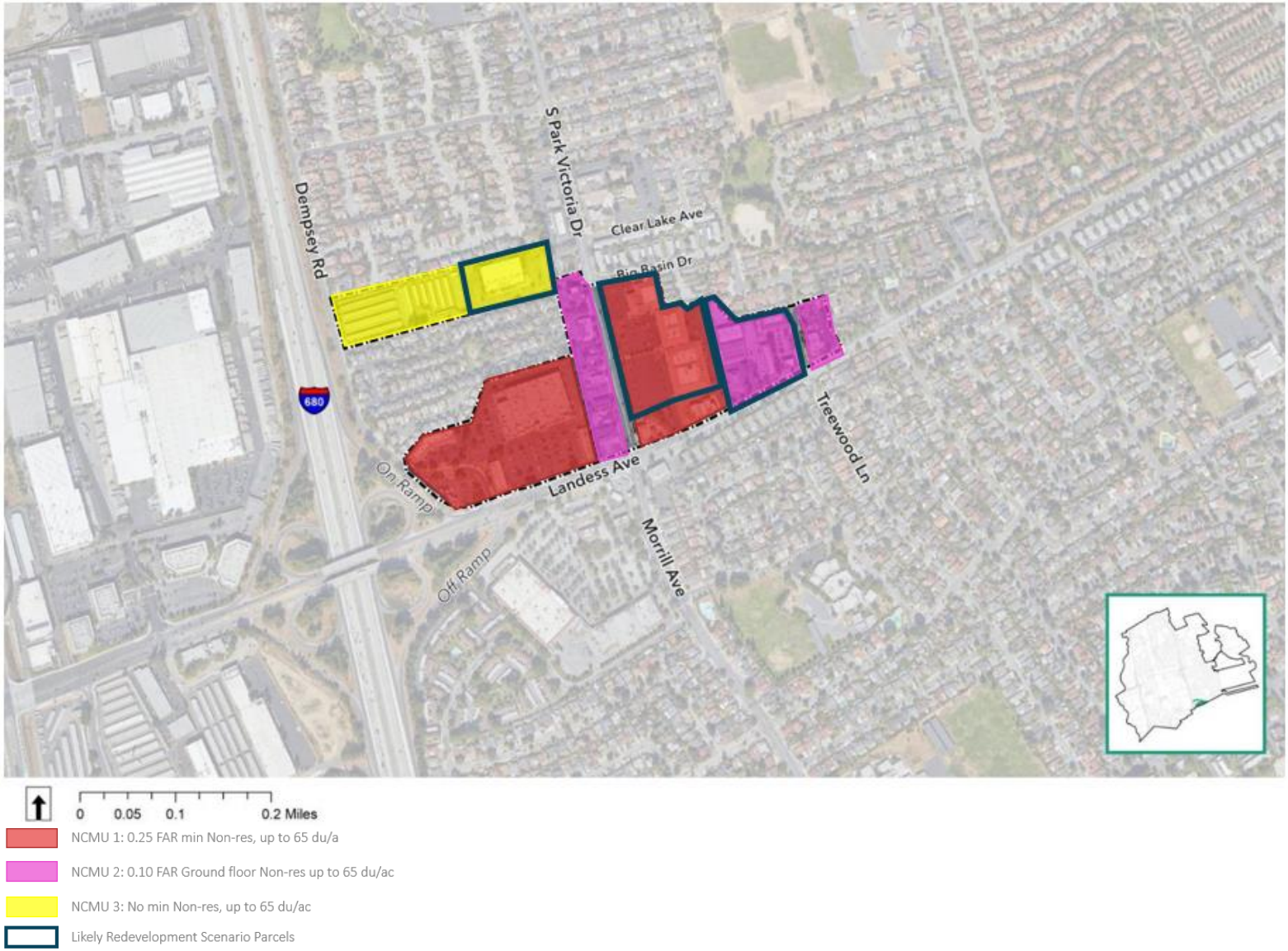

Figure 4 NCMU Landess Ave II Likely Redevelopment Scenario

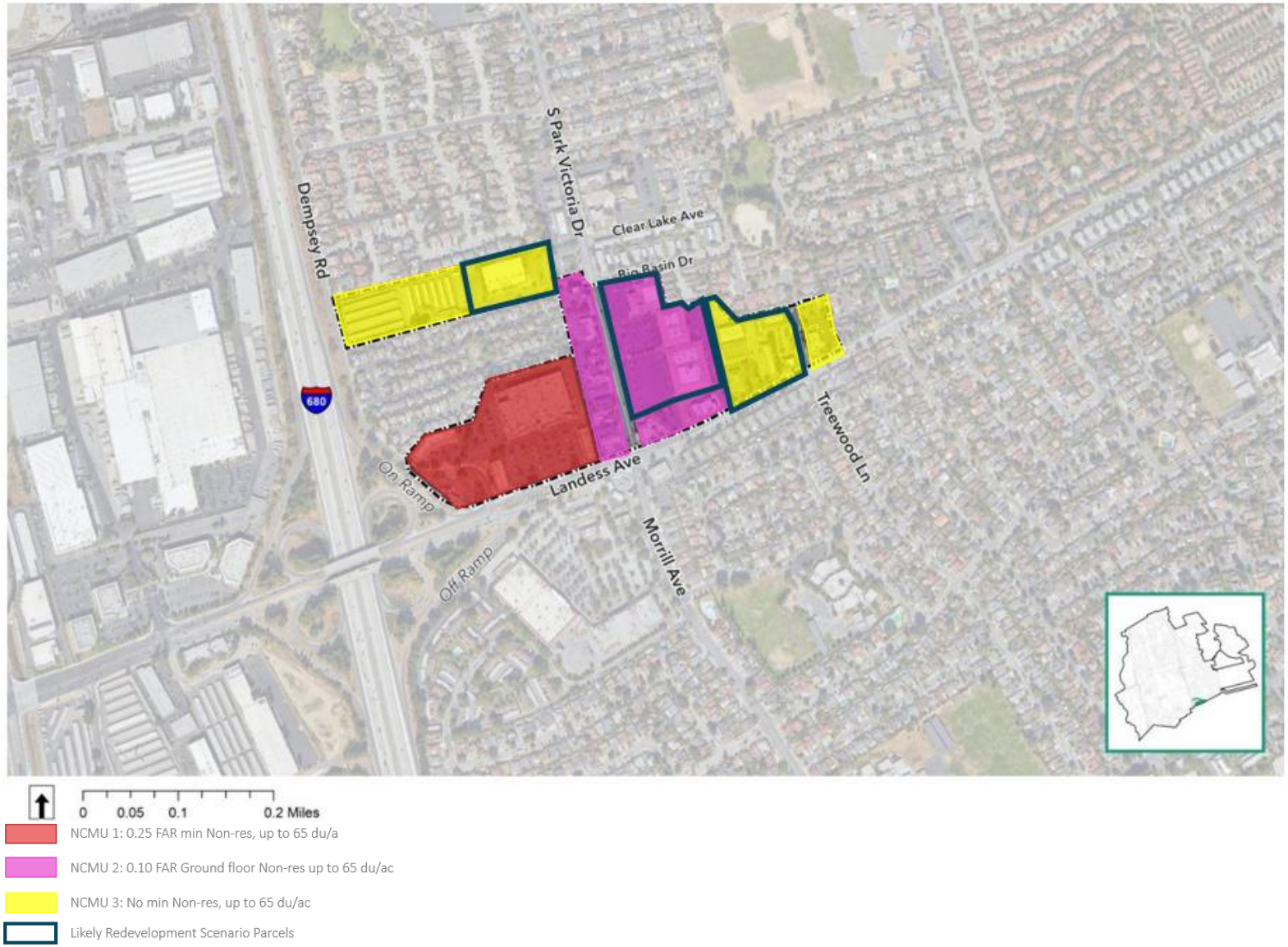

Figure 5 NCMU Dixon Road Likely Redevelopment Scenario

Figure 6 TWC Likely Redevelopment Scenario

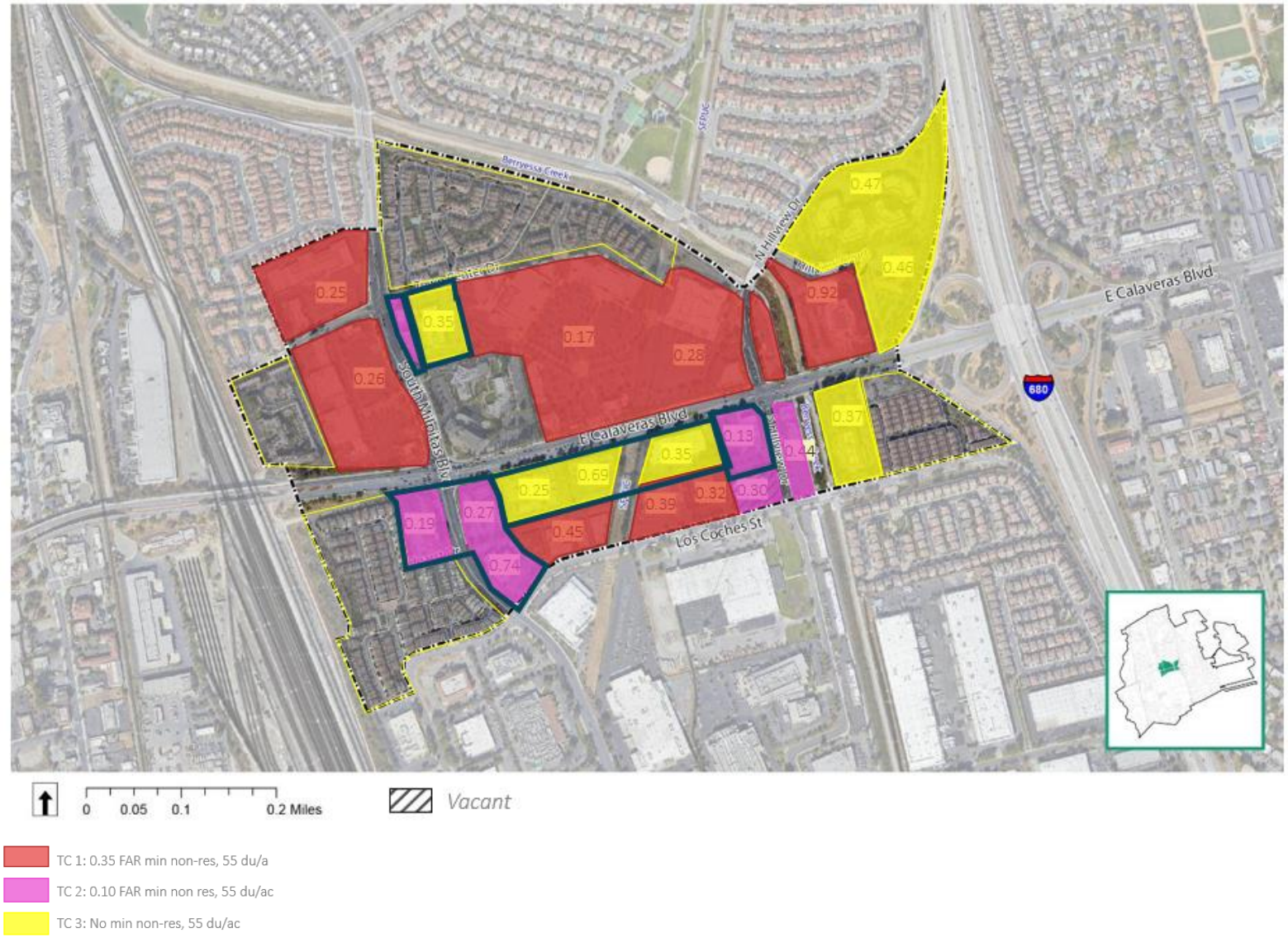

This Addendum, therefore, analyzes the changes and potential impacts related to the adoption of HOD. This Addendum is intended to evaluate consistency of the HOD with the existing General Plan EIR to comply with CEQA. In particular, and in line with Public Resources Code Section 21083.3, this Addendum assesses whether the HOD, as a policy and programs document, includes impacts not addressed or previously analyzed in the General Plan EIR.

1.7 Discretionary Action

Implementation of the HOD would require the following discretionary actions by the City of Milpitas Planning Commission/City Council:

- Consider an Addendum to the General Plan EIR
- Approval of a General Plan Amendment and Zoning Text and Map Amendments to establish Development Standards

1.8 Prior Environmental Document(s)

City of Milpitas, General Plan Update Environmental Impact Report (General Plan Update EIR). State Clearinghouse Number 2020070348, certified March 2021.

1.9 Location of Prior Environmental Document(s)

City of Milpitas, Planning Department Website:

https://www.milpitas.gov/milpitas/departments/environmentaldocuments/#1628098804620-bea5329a-9f62

2 Overview of CEQA Guidelines Section 15164 and Section 15162

CEQA Guidelines Sections 15162 and 15164 set forth the criteria for determining the appropriate additional environmental documentation, if any, to be completed when a project has a previously certified EIR.

CEQA Guidelines Section 15164 states that a lead agency shall prepare an addendum to a previously certified EIR if some changes or additions are necessary, but none of the conditions described in Section 15162 calling for preparation of a subsequent EIR have occurred. CEQA Guidelines Section 15162(a) states that no Subsequent or Supplemental EIR shall be prepared for a project with a certified EIR unless the lead agency determines, based on substantial evidence in the light of the whole record, one or more of the following:

1. Substantial changes are proposed in the project that will require major revisions of the previous EIR due to the involvement of new significant environmental effects or a substantial increase in the severity of previously identified significant effects.
2. Substantial changes occur with respect to the circumstances under which the project is undertaken which will require major revisions of the previous EIR due to the involvement of new significant environmental effects or a substantial increase in the severity of previously identified significant effects.
3. New information of substantial importance, which was not known and could not have been known with the exercise of reasonable diligence at the time the previous EIR was certified as complete, shows any of the following:
    A. The project will have one or more significant effects not discussed in the previous EIR.
    B. Significant effects previously examined will be substantially more severe than shown in the previous EIR.
    C. Mitigation measures or alternatives previously found not to be feasible would in fact be feasible and would substantially reduce one or more significant effects of the project, but the project proponents decline to adopt the mitigation measure or alternative.
    D. Mitigation measures or alternatives that are considerably different from those analyzed in the previous EIR would substantially reduce one or more significant effects on the environment, but the project proponents decline to adopt the mitigation measure or alternative.

The analysis pursuant to CEQA Guidelines Section 15162 demonstrates whether the lead agency can approve the activity as being within the scope of the existing certified EIR, that an addendum to the existing EIR would be appropriate, and no new environmental document, such as a new EIR, would be required. The addendum need not be circulated for public review but can be included in or attached to the Final EIR, and the decision-making body shall consider the addendum with the Final EIR prior to deciding on the project.

The City has prepared this Addendum, pursuant to CEQA Guidelines Sections 15162 and 15164, to evaluate whether the project's environmental impacts are covered by and within the scope of the Milpitas General Plan Update Final EIR (March 2021, State Clearinghouse Number 2020070348). The following Addendum Evaluation details any changes in the project, changes in circumstances under

which the project is undertaken, and/or "new information of substantial importance" that may cause one or more effects to environmental resources.

The responses herein substantiate and support the City's determination that the HOD changes are within the scope of the General Plan EIR, do not require subsequent action under CEQA Guidelines Section 15162 and, in conjunction with the EIR, adequately analyze potential environmental impacts.

3 Environmental Effects and Determination

3.1 Environmental Areas Determined to Have New or Substantially More Severe Significant Effects Compared to Those Identified in the Previous EIR

The subject areas checked below were determined to be new significant environmental effects or to be previously identified effects that have a substantial increase in severity either due to a change in project, change in circumstances, or new information of substantial importance, as indicated by the checklist and discussion on the following pages.

■ NONE

☐ Aesthetics	☐ Agriculture and Forestry Resources	☐ Air Quality
☐ Biological Resources	☐ Cultural Resources	☐ Energy
☐ Geology/Soils	☐ Greenhouse Gas Emissions	☐ Hazards & Hazardous Materials
☐ Hydrology/Water Quality	☐ Land Use/Planning	☐ Mineral Resources
☐ Noise	☐ Population/Housing	☐ Public Services
☐ Recreation	☐ Transportation	☐ Tribal Cultural Resources
☐ Utilities/Service Systems	☐ Wildfire	☐ Mandatory Findings of Significance

3.2 Determination

Based on this analysis:

☐ Substantial changes are proposed in the project or there are substantial changes in the circumstances under which the project will be undertaken that will require major revisions to the previous EIR due to the involvement of significant new environmental effects or a substantial increase in the severity of previously identified significant effects. Or, there is "new information of substantial importance," as that term is used in CEQA Guidelines Section 15162(a)(3). Therefore, a SUBSEQUENT or SUPPLEMENTAL EIR is required.

■ No substantial changes are proposed in the project and there are no substantial changes in the circumstances under which the project will be undertaken that will require major revisions to the previous EIR due to the involvement of significant new environmental effects or a substantial increase in the severity of previously identified significant effects. Also, there is no "new information of substantial importance" as that term is used in CEQA Guidelines Section 15162(a)(3). Therefore, the previously certified EIR is adequate and this evaluation serves as an ADDENDUM to the Milpitas General Plan Update Final Environmental Impact Report (General Plan FEIR), State Clearinghouse Number 2020070348 dated March 2021.

Avery Stark

Signature

April 2, 2024

Date

Avery Stark

Printed Name

Acting Senior Planner

Title

4 Addendum Evaluation

4.1 Aesthetics

General Plan EIR Findings

Aesthetics are discussed in Section 3.1, *Aesthetics and Visual Resources*, of the General Plan EIR. The General Plan EIR determined that with implementation of General Plan policies and actions, impacts would be less than significant for scenic vistas, scenic highways, visual quality, and light and glare.

Addendum Analysis

As discussed in Section 1.6, *Project Description*, the likely buildout scenario under the HOD would result in a net increase of 266 residential units and a net reduction of approximately 2,840,000 square feet of non-residential space overall compared to overall city buildout analyzed in the General Plan EIR. The proposed project would result in development that would occur in the same areas as those analyzed in the General Plan. Development standards in the zoning code, General Plan policies regarding design, and Residential Design Standards and Guidelines would also apply. The HOD focuses growth to areas located near existing commercial uses and services and on underutilized sites. According to the California Scenic Highway Mapping System, administered by Caltrans, there are no officially designated State Scenic Highways in the vicinity of the city of Milpitas (Caltrans 2023). Additionally, while the city contains numerous areas and viewsheds with relatively high scenic value, there are no officially designated scenic vista points in the city according to the 2040 Milpitas General Plan (Milpitas 2021). Therefore, the proposed project would not affect scenic vistas or highways within the city. Parcels in the NCMU and TCW designations that would likely be redeveloped under the HOD already contain some type of development or have been designated for future development in the General Plan. The HOD would not involve the extension of roads or other infrastructure that could indirectly lead to altered views. In addition, as shown in Table 2 and Table 3, the proposed project would not result in increased building heights beyond those currently allowed within the zoning code. The proposed residential and non-residential uses under the HOD would be similar to existing uses in the area and would not result in substantial new sources of light and glare. Furthermore, new development under the HOD would be required to comply with existing regulations and zoning standards regarding building height, scale, lighting, and design, similar to development analyzed within the General Plan EIR.

Furthermore, applications for development under the updated zoning standards would be subject to Chapter 500 of the Milpitas Municipal Code, which requires that future development be reviewed by the Planning Commission for consistency with applicable design guidelines and compatibility with existing character. Compliance with these requirements would ensure that the new housing would not substantially degrade the existing visual character in the proposed project area, damage existing scenic resources, or create light or glare that would adversely affect views.

The proposed project would not result in new or substantially more severe impacts to aesthetics compared to those identified in the General Plan EIR.

Conclusion

The HOD would not result in new impacts not addressed or analyzed in the General Plan EIR nor present new information that indicates that impacts would be more significant than those described in the General Plan EIR. Therefore, the impacts of the HOD would be within the scope of the General Plan EIR and no additional environmental assessment of aesthetics is required.

4.2 Agriculture and Forestry Resources

General Plan EIR Findings

Agriculture and forestry resources are discussed in Section 3.2, *Agricultural and Forest Resources*, of the General Plan EIR. The General Plan EIR found that impacts regarding the potential to conflict with existing farmlands, agricultural zoning or Williamson Act Contracts, and the conversion of farmlands, including prime farmland, unique farmland, and farmland of statewide importance would be less than significant.

There are no forest lands or timber lands located within the Milpitas Planning Area. The General Plan EIR found no impacts related to forest lands or timber lands.

Addendum Analysis

There are no areas zoned, designated or used for agriculture or forestry resources, and there are no agriculture or forestry resources, within or near the proposed NCMU or TC zones. Therefore, the proposed project would not introduce new impacts or substantially increased impacts related to agriculture and forestry resources compared to those identified in the General Plan EIR.

Conclusion

The HOD would not result in new impacts not addressed or analyzed in the General Plan EIR nor present new information that indicates that impacts would be more significant than those described in the General Plan EIR. Therefore, the impacts of the HOD would be within the scope of the General Plan EIR and no additional environmental assessment of agriculture and forestry is required.

4.3 Air Quality

General Plan EIR Findings

Air quality is discussed in Section 3.3, *Air Quality*, of the General Plan EIR. The General Plan EIR determined that impacts to air quality would be less than significant regarding conflicting with applicable air quality plans, cumulatively considerable net increase of criteria pollutants for which the region is in non-attainment, exposure of sensitive receptors to pollutant concentrations, and the potential to create objectionable odors. The General Plan EIR also stated that the City would enforce compliance with the Bay Area Air Quality Management District's 2017 Clean Air Plan and all applicable regional plans and programs that reduce air quality impacts.

Addendum Analysis

The proposed project would increase the maximum allowable dwelling units within the NCMU and TC zones, and no new sensitive land uses not already allowed in the project area would be added. The proposed project would result in a net increase of 266 residential units and a net reduction of approximately 2,840,000 square feet of non-residential space overall compared to overall city buildout analyzed in the General Plan EIR. The proposed population growth could lead to additional traffic and associated air pollutant emissions. However, as discussed in Section 4.14, *Population and Housing*, 266 new residential units would result in a total population increase of approximately 833 new residents compared to the General Plan EIR. The increase of 833 new residents would represent a small increase over the anticipated General Plan EIR population (2.2 percent). The proposed project would concentrate development along existing transit corridors and in existing urban areas where goods and services are accessible to bicyclists and pedestrians. This would reduce vehicle trips and vehicle miles traveled compared to development in more car-dependent areas of the city. Additionally, the proposed project would result in a net reduction of approximately 2,840,000 square feet of non-residential space compared to the General Plan EIR which would largely offset the potential increase in emissions due to increased residential units.

Furthermore, the HOD, in and of itself, does not propose specific projects but makes updates the General Plan and updates the zoning code which regulate various aspects of new development in Milpitas. Because it is a policy document, the HOD would not, in and of itself, result in impacts to air quality. Future development facilitated by the HOD would be required to comply with State, regional, and local requirements and regulations regarding air quality including SB 32, AB 32, SB 97, and SB 375, as well as California Air Resources Board and Bay Area Air Quality Management District guidelines. Therefore, the proposed project would not introduce new impacts or substantially increased impacts related to air quality compared to those identified in the General Plan EIR.

Conclusion

The HOD would not result in new impacts not addressed or analyzed in the General Plan EIR nor present new information that indicates that impacts would be more significant than those described in the General Plan EIR. Therefore, the impacts of the HOD would be within the scope of the General Plan EIR and no additional environmental assessment of air quality is required.

4.4 Biological Resources

General Plan EIR Findings

Biological resources are addressed in Section 3.4, *Biological Resources*, of the General Plan EIR. The General Plan EIR determined that impacts regarding special status species, riparian habitat or other sensitive natural communities, or protected wetlands would be less than significant. Similarly, impacts to protected movement corridors were determined to be less than significant.

The General Plan EIR found that the General Plan would not conflict with local policies or ordinances protecting biological resources, the provisions of an adopted Habitat Conservation Plan, Natural Community Conservation Plan, or other approved local, regional, or state habitat conservation plan. Impacts were determined to be less than significant.

Addendum Analysis

Policies and actions in the General Plan that were referenced in the General Plan EIR would help reduce impacts to less than significant levels. These policies and actions would be required with implementation of the HOD.

The proposed project would result in development that would occur in the same areas as those analyzed in the General Plan. The HOD focuses growth to areas located near existing commercial uses and services and on underutilized sites. Development under the project would occur on parcels that have already been developed and not within areas designated as open space or where vegetation and other biological resources would be affected. Future development facilitated by the HOD would be required to comply with federal, State, and local requirements and regulations regarding biological resources including General Plan policies and actions. As a result, the proposed project would not introduce new impacts or substantially increased impacts related to biological resources compared to those identified in the General Plan EIR.

Conclusion

The HOD would not result in new impacts not addressed or analyzed in the General Plan EIR nor present new information that indicates that impacts would be more significant than those described in the General Plan EIR. Therefore, the impacts of the HOD would be within the scope of the General Plan EIR and no additional environmental assessment of biological resources is required.

4.5 Cultural Resources

General Plan EIR Findings

Cultural resources are addressed in Section 3.5, *Cultural Resources*, of the General Plan EIR. The General Plan EIR determined that the implementation of the General Plan would result in a less than significant impacts regarding historic resources, archaeological resources, and human remains.

Addendum Analysis

The proposed project would result in development that would occur in the same areas as those analyzed in the General Plan. As such, the potential for impacts from the proposed project would be generally the same as what was identified in the General Plan EIR. Moreover, since the new housing units would be primarily infill development on already developed lots, depth and extent of grading would be similar to that anticipated and analyzed in the General Plan EIR. Therefore, the potential to uncover buried resources during construction of new housing would be similar to that anticipated and analyzed in the General Plan EIR. Future development facilitated by the HOD would be required to comply with State, regional, and local requirements and regulations regarding cultural resources including General Plan policies and actions, the City's municipal code, California Health and Safety Code Section 7050.5, and California Public Resources Code Section 5097.98. Therefore, the proposed project would not introduce new impacts or substantially increased impacts related to historic or other cultural resources compared to those identified in the General Plan EIR.

Conclusion

The HOD would not result in new impacts not addressed or analyzed in the General Plan EIR nor present new information that indicates that impacts would be more significant than those described

in the General Plan EIR. Therefore, the impacts of the HOD would be within the scope of the General Plan EIR and no additional environmental assessment of cultural resources is required.

4.6 Energy

General Plan EIR Findings

Energy impacts are discussed in Section 3.7, *Greenhouse Gases, Climate Change, and Energy*, of the General Plan EIR. The General Plan EIR determined that compliance with applicable Federal, State, and local regulations regarding energy use, increased use of renewable energy, and new building energy efficiency standards would result in less than significant impacts.

Addendum Analysis

The proposed project would result in additional housing units on certain parcels, where requested by applicants and approved by the City. As discussed in Section 1.6, *Project Description*, the likely buildout scenario under the HOD would result in a net increase of 266 residential units and a net reduction of approximately 2,840,000 square feet of non-residential space overall compared to overall city buildout analyzed in the General Plan EIR. However, new housing projects would be required to comply with standards set in California Building Code (CBC) Title 24, which would minimize the wasteful, inefficient, or unnecessary consumption of energy resources during operation. California's Green Building Standards Code (CALGreen; California Code of Regulations, Title 24, Part 11) requires implementation of energy efficient light fixtures and building materials into the design of new construction projects. Furthermore, the 2019 Building Energy Efficiency Standards (CBC Title 24, Part 6) requires newly constructed buildings to meet energy performance standards set by the California Energy Commission. As the name implies, these standards are specifically crafted for new buildings to result in energy efficient performance so the buildings do not result in wasteful, inefficient, or unnecessary consumption of energy. The standards are updated every three years, and each iteration is more energy efficient than the previous standards. Furthermore, new housing projects would further reduce their use of nonrenewable energy resources as the electricity generated by renewable resources provided by PG&E continues to increase to comply with state requirements through Senate Bill 100, which requires electricity providers to increase procurement from eligible renewable energy resources to 33 percent of total retail sales by 2020, 60 percent by 2030, and 100 percent by 2045. Therefore, the proposed project would not result in new or substantially more severe energy impacts compared to those identified in the General Plan EIR.

Conclusion

The HOD would not result in new impacts not addressed or analyzed in the General Plan EIR nor present new information that indicates that impacts would be more significant than those described in the General Plan EIR. Therefore, the impacts of the HOD would be within the scope of the General Plan EIR and no additional environmental assessment of energy is required.

4.7 Geology and Soils

General Plan EIR Findings

Impacts related to geology and soils are discussed in Section 3.6, *Geology and Soils*, of the General Plan EIR. The General Plan EIR determined that implementation of General Plan policies and actions, including those requiring project-specific geotechnical investigations, and applicable State and City regulations, impacts to geology and soils would be less than significant for adverse effects related to ground shaking, seismic-related ground failure, unstable soil, landslide, loss of topsoil, soil erosion, and paleontological resources.

The General Plan EIR determined that construction within the city limits allowed by the proposed Plan would not require the use of septic tanks or alternative wastewater disposal systems. Limited use of septic tanks may be required within hillside areas of the Planning Area outside the city limits and within the SOI. Adherence to required county health permits and reviews would reduce potential impacts. Impacts would be less than significant.

Addendum Analysis

The proposed project would result in development that would occur in the same areas as those analyzed in the General Plan. As a result, the proposed project would be subject to the same geologic conditions and hazards as those identified in the General Plan EIR. As discussed in Section 1.6, *Project Description*, the likely buildout scenario under the HOD would result in a net increase of 266 residential units and a net reduction of approximately 2,840,000 square feet of non-residential space overall compared to overall city buildout analyzed in the General Plan EIR. The proposed HOD would facilitate infill growth, promote housing in close proximity to employment opportunities and would not involve the extension of roads or other infrastructure that could result in significant impacts to geology and soils. The HOD would result in increased residential densities within the NCMU and TC zones but would not result in increased building heights beyond what is currently allowed under the existing code. Therefore, it can reasonably be assumed that the proposed project would not require ground-disturbing activities that would exceed those previously analyzed by the General Plan EIR

Furthermore, future development facilitated by the HOD would be required to adhere to State and City grading and building standards and requirements related to geological issues and paleontological resources including General Plan policies and actions, the California Building Standards Code, and the City's municipal code. New projects would be required to comply with Section XI-1-15.02 and Section XI-10-45.18 of the Milpitas Municipal Code, which include grading and erosion control requirements for new development within the city. Adherence to these requirements would reduce the potential for property damage, injury, or death resulting from seismic hazards. As a result, the proposed project would not introduce new impacts or substantially increased impacts related to geology, soils, and seismicity compared to those identified in the General Plan EIR.

Conclusion

The HOD would not result in new impacts not addressed or analyzed in the General Plan EIR nor present new information that indicates that impacts would be more significant than those described in the General Plan EIR. Therefore, the impacts of the HOD would be within the scope of the General Plan EIR and no additional environmental assessment of geology and soils is required.

4.8 Greenhouse Gas Emissions

General Plan EIR Findings

Greenhouse gas (GHG) impacts are discussed in Section 3.7, *Greenhouse Gases, Climate Change, and Energy*, of the General Plan EIR. The General Plan EIR determined that the General Plan is consistent with Milpitas' adopted Climate Action Plan (CAP) and would not conflict with an applicable plan, policy, or regulation adopted for the purpose of reducing the emissions of greenhouse gases. The General Plan EIR determined that with implementation of General Plan policies and actions, General Plan implementation would not generate GHG emissions, either directly or indirectly, that may have a significant impact on the environment. Impacts were determined to be less than significant.

Addendum Analysis

The proposed project would result in additional housing units on certain parcels, where requested by applicants and approved by the City. As discussed in Section 1.6, *Project Description*, the likely buildout scenario under the HOD would result in a net increase of 266 residential units and a net reduction of approximately 2,840,000 square feet of non-residential space overall compared to overall city buildout analyzed in the General Plan EIR.

The proposed population growth could lead to additional traffic and associated greenhouse gas emissions. However, as discussed in Section 4.3, *Air Quality*, the increase of 833 new residents would represent a small increase over the anticipated General Plan EIR population (2.2 percent). The proposed project would concentrate development along existing transit corridors and in existing urban areas where goods and services are accessible to bicyclists and pedestrians. This would reduce vehicle trips and greenhouse gas emissions compared to development in more car-dependent areas of the city. Additionally, the proposed net reduction of approximately 2,840,000 square feet of allowed non-residential space compared to the General Plan EIR would largely offset the potential increase in residential emissions, due to reduced vehicle trips associated with those uses.

Future building associated with the HOD would not include natural gas appliances or natural gas plumbing because the City requires that new residential buildings in the City of Milpitas be all electric, pursuant to City of Milpitas Municipal Code Section 4.106.5. Future buildings would not result in wasteful, inefficient, or unnecessary energy use, as explained in Section 4.6 of this Addendum. Finally, future development would achieve compliance with electric vehicle requirements in the most recently adopted version of CALGreen Tier 2, as this is a City requirement pursuant to Municipal Code Section 4.106.4. Moreover, future development would be required to adhere to General Plan actions and policies and the City's CAP as well as Federal, State, and regional plans, standards and requirements designed to reduce GHG emissions with new residential construction, including Title 20, Division 2, *State Energy Resources Conservation and Development Commission*; and Title 24, Part 11, *California Green Building Standards Code* of the California Code of Regulations. Therefore, the proposed project would not result in new or substantially more severe greenhouse gas impacts compared to those identified in the General Plan EIR.

Conclusion

The HOD would not result in new impacts not addressed or analyzed in the General Plan EIR nor present new information that indicates that impacts would be more significant than those described

in the General Plan EIR. Therefore, the impacts of the HOD would be within the scope of the General Plan EIR and no additional environmental assessment of GHG emissions is required.

4.9 Hazards and Hazardous Materials

General Plan EIR Findings

Hazards and hazardous materials are discussed in Section 3.8, *Hazards and Hazardous Materials,* of the General Plan EIR. The General Plan EIR determined that impacts for hazardous materials would be less than significant with implementation of General Plan policies and actions for impacts related to the routine transport, use, or disposal of hazardous materials; the emission of acutely hazardous materials, substances, or waste within 0.25 mile of an existing or proposed school; development on or near sites listed as hazardous material sites pursuant to Government Code Section 65962.5; implementation of emergency response or evacuation plans; and risk of loss, injury, or death involving wildland fires.

Addendum Analysis

The proposed project would result in development that would occur in the same areas as those analyzed in the General Plan EIR. As such, the proposed project and sites for development would be subject to the same conditions as those identified in the General Plan EIR. New housing does not typically introduce hazardous materials and any hazardous materials that would be generated by the proposed project would be limited to the kind of hazardous materials typically found in residential areas (i.e., cleaning projects, paint, etc.). New housing would be required to comply with the same local, state, and federal regulations identified in the General Plan, as well as the City's municipal code requirements regarding hazards and hazardous waste including Title 49, Parts 171-180 of the Code of Federal Regulations, and Title 8, Title 22, and Title 26 of the California Code of Regulations, and their enabling legislation set forth in Chapter 6.95 of the California Health and Safety Code. Additionally, Milpitas is not within an Airport Land Use Compatibility Plan zone and would not result in impacts related to airports. Thus, the proposed project would not introduce new impacts or substantially increased impacts related to hazards and hazardous materials compared to those identified in the General Plan EIR.

Conclusion

The HOD would not result in new impacts not addressed or analyzed in the General Plan EIR nor present new information that indicates that impacts would be more significant than those described in the General Plan EIR. Therefore, the impacts of the HOD would be within the scope of the General Plan EIR and no additional environmental assessment of hazards and hazardous materials is required.

4.10 Hydrology and Water Quality

General Plan EIR Findings

Hydrology and water quality is discussed in Section 3.9, *Hydrology and Water Quality*, of the General Plan EIR. The General Plan EIR determined that impacts to hydrology and water quality would be less than significant relating to violating any water quality standards or waste discharge requirements, substantially decreasing groundwater supplies or interfering substantially with

groundwater recharge, creating or contributing to runoff water which would exceed the capacity of existing or planned stormwater drainage systems, degrading water quality, and exposing people or structures to a significant risk of loss, injury or death involving flooding.

Addendum Analysis

The proposed project would result in development that would occur in the same areas as those analyzed in the General Plan EIR. Future development facilitated by the HOD would be required to adhere to General Plan actions and policies as well as Federal, State, regional, and municipal code regulations and requirements that would minimize exposure to flood-related hazards and minimize water quality impacts and impacts to wetlands resulting from new development. In addition, Milpitas is primary built out and proposed development under the HOD would occur in previously developed areas of the city. Therefore, construction of new housing units under the HOD would not substantially increase impervious surface area, alter drainage patterns, or expose additional residents to flood-related hazards. Finally, new projects would be required to comply with Section XI-1-13.02 of the Milpitas Municipal Code, which requires a storm drainage plan and fees for all parcels of real property in the city that drain into the city storm drainage system. As a result, the proposed project would not introduce new impacts or substantially increase impacts related to hydrology and flooding compared to those identified in the General Plan EIR.

Conclusion

The HOD would not result in new impacts not addressed or analyzed in the General Plan EIR nor present new information that indicates that impacts would be more significant than those described in the General Plan EIR. Therefore, the impacts of the HOD would be within the scope of the General Plan EIR and no additional environmental assessment of hydrology and water quality is required.

4.11 Land Use and Planning

General Plan EIR Findings

Land use is discussed in Section 3.10, *Land Use Planning and Population/Housing*, of the General Plan EIR. The General Plan EIR determined that impacts to land use would be less than significant as they pertain to conflicts with applicable land use plans, policies, or regulations; and physical division of an established community.

Addendum Analysis

As described in Section 1.6, *Project Description*, the HOD would result in zoning updates to parcels within the TC and NCMU zones that can be rezoned to allow residential uses or greater residential densities. The HOD would result in approximately 2,908 new units compared to existing conditions across both the TWC and NCMU land use designations. Compared to the General Plan EIR, the project would result in a net increase of 266 residential units. As shown in Table 2 and Table 3, the proposed project would allow for greater residential density compared to existing conditions.

The HOD, in and of itself, does not propose specific projects but makes updates to the General Plan and zoning code which regulate various aspects of new development in Milpitas. Because it is a policy document, the HOD would not, in and of itself, result in impacts to land use. However, policies and actions in the General Plan that were referenced in the General Plan EIR would help reduce impacts to less than significant levels. These policies and actions would be required with

implementation of the HOD. Furthermore, since most of the identified parcels within the TC and NCMU zones already contain some type of development, housing that may be built on these sites would not create a substantial change from current conditions. Therefore, with City Council adoption of the proposed land use and zoning changes the proposed project would not introduce new impacts or substantially increased impacts related to land use and planning compared to those identified in the General Plan EIR.

Conclusion

The HOD would not result in new impacts not addressed or analyzed in the General Plan EIR nor present new information that indicates that impacts would be more significant than those described in the General Plan EIR. Therefore, the impacts of the HOD would be within the scope of the General Plan EIR and no additional environmental assessment of land use is required.

4.12 Mineral Resources

General Plan EIR Findings

Mineral Resources are discussed in Section 3.11, *Mineral Resources*, of the General Plan EIR. The General Plan EIR states that there are areas of Regionally Significant Construction Aggregate Resources and important mineral resources within the General Plan Planning Area and Milpitas SOI; however, development facilitated by the General Plan would be within City limits and would not be developed within an identified regional mineral resource area or mining operation. Impacts related to loss of availability of a known mineral resource and locally-important mineral resource recovery were determined to be less than significant.

Addendum Analysis

The proposed project would not include uses or activities related to mineral resources and would not introduce uses or activities to areas designated for mineral resource mining. There would be no changes to the General Plan boundaries. The proposed project would not introduce new impacts or substantially increase impacts related to mineral resources compared to those identified in the General Plan EIR.

Conclusion

The HOD would not result in new impacts not addressed or analyzed in the General Plan EIR nor present new information that indicates that impacts would be more significant than those described in the General Plan EIR. Therefore, the impacts of the HOD would be within the scope of the General Plan EIR and no additional environmental assessment of mineral resources is required.

4.13 Noise

General Plan EIR Findings

Noise impacts are discussed in Section 3.12, *Noise*, of the General Plan EIR. The General Plan EIR determined that implementation of the General Plan would result in significant and unavoidable impacts regarding traffic noise on existing noise-sensitive uses in the city. Impacts due to noise from to railroad, stationary, and construction sources; construction vibration; and ground borne vibration were found to be less than significant. The General Plan EIR discusses airport land use in Section 3.8,

Hazards and Hazardous Materials, and determined that General Plan implementation is not located within an airport land use plan.

Addendum Analysis

The proposed project would increase the maximum allowable dwelling units within the NCMU and TC zones, and no new noise-sensitive land uses would be added. Furthermore, the proposed project would not alter existing General Plan policies and programs aimed at minimizing the impacts of noise sources. There would not be a significant increase in on-site stationary noise sources, such as heating, ventilation, and air conditioning equipment and systems and utility transformers, under the proposed project, as this equipment is allowed under current conditions. Additionally, development under the proposed project would result in construction noise and vibration similar to development under the General Plan EIR. The General Plan EIR identified a significant impact related to traffic noise, which was mitigated to the greatest extent feasible through General Plan policies and actions, but remained significant and unavoidable. Since the proposed project contains similar uses that would result in similar vehicle trips as those evaluated within the General Plan EIR, it would not result in new or more severe impacts related to conflicts with applicable noise standards and increases in ambient noise levels and groundborne vibration due to traffic. Policies and actions in the General Plan that were referenced in the General Plan EIR would help reduce impacts to the greatest extent possible. These policies and actions would be required with implementation of the HOD. In addition, future development facilitated by the HOD would be required to adhere to the City's municipal code, including the noise ordinance.

Therefore, the proposed project would not result in new or substantially more severe significant impacts related to conflicts with applicable noise standards compared to those identified in the General Plan EIR.

Conclusion

The HOD would not result in new impacts not addressed or analyzed in the General Plan EIR nor present new information that indicates that impacts would be more significant than those described in the General Plan EIR. Therefore, the impacts of the HOD would be within the scope of the General Plan EIR and no additional environmental assessment of noise is required.

4.14 Population and Housing

General Plan EIR Findings

Population and housing are discussed in Section 3.10, *Land Use Planning and Population/Housing*, of the General Plan EIR. The General Plan EIR determined implementation of the General Plan would result in a less than significant impact relating to unplanned population growth or the displacement of people or housing. At full buildout, the proposed General Plan could accommodate a total of up to 33,401 housing units, a population of 113,530 people, 47,737,536 square feet of non-residential building square footage, and 84,333 jobs within the General Plan planning area. As shown in Table 2.0-2 of the General Plan EIR, this represents development growth over existing conditions of up to 11,186 new housing units, 37,473 people, 19,729,648 square feet of new non-residential building square footage and 36,795 jobs.

Addendum Analysis

The HOD, in and of itself, does not propose specific development projects. As discussed in Section 1.6, *Project Description*, the likely buildout scenario under the HOD would result in a net increase of 266 residential units and a net reduction of approximately 2,840,000 square feet of non-residential space compared to overall city buildout analyzed in the General Plan EIR. The California Department of Finance estimates that Milpitas has an average household size of 3.13 residents per unit (DOF 2023). Therefore, the likely buildout scenario under the HOD would increase the number of residents by approximately 833 compared to the General Plan EIR. This translates to a population increase of approximately 2.2 percent under the HOD compared to the General Plan EIR. Although the proposed HOD would increase residential units compared to the General Plan EIR, the State requires that all local governments adequately plan to meet the housing needs of their communities. The increase in population would allow Milpitas to provide its fair share of the regional housing, which requires the City to plan capacity for 6,713 new units. Furthermore, according to ABAG growth patterns, North and East Santa Clara County (of which Milpitas is located between) are anticipated to see growth of 199 percent and 67 percent, respectively (ABAG 2020). This accounts for roughly 21 percent of the share of regional growth for the Bay Area. Development allowed under the HOD would increase the residential buildout capacity and associated population growth compared with development analyzed under the General Plan EIR. However, non-residential development would be reduced under the HOD. As such, growth that would occur under the HOD would not be substantial or unplanned growth.

The HOD directs growth to areas located near existing commercial uses and services and on underutilized sites. Parcels in the NCMU and TCW designations that would likely be redeveloped under the HOD already contain some type of development or have been designated for future development in the General Plan. As such, potential housing under the HOD would not result in loss of existing housing in the NCMU and TC zones; rather, it would serve to develop new housing opportunities within the city. The proposed HOD would facilitate infill growth, promote housing in proximity to employment opportunities, and support regional planning efforts. In addition, the project would not involve the extension of roads or other infrastructure that could indirectly lead to population growth. The city is mostly developed and is supported by existing public services and infrastructure which are sufficient to serve the additional housing units. As such, growth that would occur under the HOD would not result in displacement of existing people or housing. Therefore, the proposed project would not introduce new impacts or substantially increased impacts related to population and housing compared to those identified in the General Plan EIR.

Conclusion

The HOD would not result in new impacts not addressed or analyzed in the General Plan EIR nor present new information that indicates that impacts would be more significant than those described in the General Plan EIR. Therefore, the impacts of the HOD would be within the scope of the General Plan EIR and HOD and no additional environmental assessment of population and housing is required.

4.15 Public Services

General Plan EIR Findings

Public services are discussed in Section 3.13, *Public Services and Recreation*, of the General Plan EIR. The General Plan EIR determined that implementation of the General Plan would not result in

substantial adverse physical impacts associated with new or physically altered public services facilities, including those related to fire, police, schools, parks, and libraries, and impacts would be less than significant.

Addendum Analysis

The proposed project may result in additional housing units on certain parcels, where requested by applicants and approved by the City. However, development would be allowed in the same areas as analyzed in the General Plan EIR. The proposed project would result in additional population growth, which could place additional demand on public services (i.e., fire, police, schools, recreational resources).

The proposed population growth could lead to additional demand for police and fire services. However, the increase of 833 new residents would represent a small increase over the anticipated General Plan EIR population (2.2 percent). This potential growth would be concentrated within existing urban areas where police and fire services are accessible to residents. Furthermore, the proposed project would result in a net reduction of approximately 2,840,000 square feet of non-residential space compared to the General Plan EIR which would largely offset the potential increase in demand for police and fire services. Future projects would be required to comply with the City of Milpitas Municipal Code Section V-300-2.30 which covers the cost of the Milpitas Fire Department to review and inspect the intended activities, operations, and functions. As such, it can be anticipated that the proposed project would not result in an increased demand for police and fire services which would require expansion or construction of new facilities.

Regarding schools, future projects would be subject to Senate Bill 50 school impact fees (established by the Leroy F. Greene School Facilities Act of 1998). Section 65996 of the State Government Code states that the payment of the school impact fees established by Senate Bill 50, which may be required by any state or local agency, is deemed to constitute full and complete mitigation for school impacts from development. As such, potential impacts on schools from population growth associated with the proposed project would be addressed through the payment of fees.

Future projects under the proposed project would be required to meet recreation standards through the City of Milpitas Municipal Code Section XI-1-9.06 which states that the amount of land required to be provided as park land pursuant to this section in the rest of the City shall be that figure which is the result of multiplying the project's estimated population (as calculated in Section 9.05) and 217.80 square feet (5 acres per 1,000 people). As such, future development would allow and plan for recreational and open spaces within project plans and prior to project approval.

All future development associated with the HOD would be required to pay Public Facilities Impact Fees. The purpose of Public Facilities Impact Fees is to provide funding for necessary maintenance and improvements created by development projects, including general facilities and equipment, libraries, police, parks and recreation, streets and traffic, fire, and storm drainage. Public facilities impact fees are based on the uses, the number of dwelling units, and the amount of square footage to be located on the property after completion of the development project. As such, through payment of the Public Facilities Impact Fees, the incremental demand on public services from additional growth would be addressed. Furthermore, as described in the General Plan EIR, if expansion of fire, police, school, or recreational facilities is needed to meet demand, those future facilities would undergo a development review process and be subject to environmental review pursuant to CEQA. That environmental review would identify site-specific conditions and physical changes resulting from a facility expansion, construction of a new facility, and/or infrastructure improvements needed.

For these reasons, the proposed project would not introduce new impacts or substantially increased impacts related to public services compared to those identified in the General Plan EIR.

Conclusion

The HOD would not result in new impacts not addressed or analyzed in the General Plan EIR nor present new information that indicates that impacts would be more significant than those described in the General Plan EIR. Therefore, the impacts of the HOD would be within the scope of the General Plan EIR and no additional environmental assessment of public services is required.

4.16 Recreation

General Plan EIR Findings

Recreation is discussed in Section 3.13, *Public Services and Recreation*, of the General Plan EIR. The General Plan EIR determined that implementation of the General Plan would not result in substantial adverse physical impacts associated with new or physically altered recreational facilities, and impacts would be less than significant.

Addendum Analysis

As discussed above under Section 4.15, *Public Services*, future projects under the proposed project would be required to meet recreation standards through the City of Milpitas Municipal Code Section XI-1-9.06 which states that the amount of land required to be provided for new development is 5 acres per 1,000 people. Site-specific physical impacts of future park development and construction cannot be determined until future projects are proposed. The HOD, in and of itself, does not propose specific projects but updates the General Plan and updates the zoning code which regulate various aspects of new development in Milpitas. Future development facilitated by the HOD would undergo developmental review and would be evaluated for consistency with the General Plan policies and actions, State law, the City's municipal code including the dedication of land or the payment of fees and other applicable regulations. As such, the proposed project would not introduce new impacts or substantially increased impacts related to recreation compared to those identified in the General Plan EIR.

Conclusion

The HOD would not result in new impacts not addressed or analyzed in the General Plan EIR nor present new information that indicates that impacts would be more significant than those described in the General Plan EIR. Therefore, the impacts of the HOD would be within the scope of the General Plan EIR and no additional environmental assessment of recreation is required.

4.17 Transportation/Traffic

General Plan EIR Findings

Transportation impacts are discussed in Section 3.14, *Transportation and Circulation*, of the General Plan EIR. The General Plan EIR determined that impacts related to conflicts with an applicable plan, ordinance, or policy addressing the circulation system including roadway, bicycle, or pedestrian facilities would be less than significant.

The General Plan EIR determined that vehicle miles travelled (VMT) generated by the residential development associated with the proposed General Plan would constitute a less than significant impact. However, the VMT impacts associated with employment-based development and employment-based uses allowed by the proposed General Plan were determined to be considered significant and unavoidable.[2]

The General Plan determined that General Plan implementation would not substantially increase hazards due to a geometric design feature or incompatible use or result in inadequate emergency access. Impacts would be less than significant.

Addendum Analysis

The HOD, in and of itself, does not propose specific development projects. As discussed in Section 1.6, *Project Description*, the likely buildout scenario under the HOD would result in a net increase of 266 residential units and a net reduction of approximately 2,840,000 square feet of non-residential space overall compared to overall city buildout analyzed in the General Plan EIR. This increase of residential units would result in an incremental increase in vehicle miles traveled (VMT) from people traveling to and from their homes and employment centers. However, the proposed project would result in a net reduction of approximately 2,840,000 square feet of non-residential space compared to the General Plan EIR which would largely offset the potential increase in residential VMT.

The HOD directs growth to areas located near existing commercial uses and services and on underutilized sites. Parcels in the NCMU and TC zones that would likely be redeveloped under the HOD already contain some type of development or have been designated for future development in the General Plan. The proposed HOD would facilitate infill growth, promote housing in close proximity to employment opportunities, and support regional planning efforts. The proposed development areas would encourage multi-use residential development. The NCMU zone would encourage active neighborhood-serving uses at the ground level, including grocery stores, specialty retail, restaurants, plazas, or walk-in personal services such as banks and salons. The TC zone would encourage mixed-use residential project that integrates residential and nonresidential uses either vertically or horizontally. At its core, the HOD focuses on encouraging residential development near places of work and commercial services which encourages a reduction in VMT by making active transportation such as walking and cycling more accessible to residents. The General Plan EIR identified a significant impact related to VMT which was mitigated to the extent feasible through General Plan policies and actions but remained significant and unavoidable. Policies and actions in the General Plan that were referenced in the General Plan EIR would help reduce impacts to the extent possible. These policies and actions would be required with implementation of the HOD.

In addition, the project would not involve the extension of roads or other infrastructure that could indirectly lead to population growth. The city is mostly developed and is supported by existing roadways and transportation infrastructure which are sufficient to serve the additional housing units. Since non-vacant sites already contain some type of development, housing that may be built on these sites would not create a substantial change from current conditions. Most of the parcels identified in the HOD are in proximity to a mix of land uses, which would encourage walking and biking to commercial services such as restaurants, shops, and grocery stores. Therefore, rather than conflicting with transportation policies and plans, the HOD would support implementation of these

[2] Guidance provided by the California Governor's Office of Planning and Research (OPR) in the publication Transportation Impacts (SB 743) CEQA Guidelines Update and Technical Advisory, 2018, was used to evaluate VMT. After the General Plan EIR was certified, the Milpitas City Council adopted the SB 743 VMT policy on May 18, 2021 and guidelines are established in the City of Milpitas Transportation Analysis Guidelines (City of Milpitas 2022).

plans by accommodating non-vehicular travel, thereby reducing VMT. Future development facilitated by HOD would be required to comply with applicable regulations and plans related to roadway design standards and emergency access including the City's municipal code, and General Plan policies and actions.

Therefore, the proposed project would not introduce new impacts or substantially increased impacts related to transportation compared to those identified in the General Plan EIR.

Conclusion

The HOD would not result in new impacts not addressed or analyzed in the General Plan EIR nor present new information that indicates that impacts would be more significant than those described in the General Plan EIR. Therefore, the impacts of the HOD would be within the scope of the General Plan EIR and no additional environmental assessment of transportation is required.

4.18 Tribal Cultural Resources

General Plan EIR Findings

Tribal cultural resources are discussed in Section 3.5, *Cultural Resources*, of the General Plan EIR. The General Plan EIR determined that impacts to tribal cultural resources would be less than significant.

During the 2016 General Plan update process, the City sent SB 18 Tribal consultation letters to eight Tribal Organizations including the Native American Heritage Commission, Amah Mutsun Tribal Band, Amah Mutsun Tribal Band of Mission San Juan Bautista, Indian Canyon Mutsun Band of Coastanoan, Muwekma Ohlone Indian Tribe of the SF Bay Area, North Valley Yokuts, Ohlone Indian Tribe, and the Milpitas Historical Society via certified mail. Follow up letters were sent on June 23, 2020, during the NOP comment period to all tribes identified in the EIR. No responses had been received when the EIR was prepared.

Regarding tribal consultation pursuant to AB 52, City staff noted that no tribes have requested the City of Milpitas notify them through a formal notification process of proposed projects requiring the preparation of a negative (mitigated) declaration or EIR; therefore, no AB 52 tribal notification letters were sent out for the General Plan update.

Addendum Analysis

On March 15, 2024, the City sent letters to nine Tribal Organizations pursuant to SB 18: Amah Mutsun Tribal Band, Amah MutsunTribal Band of Mission San Juan Bautista, Indian Canyon Mutsun Band of Costanoan, Muwekma Ohlone Indian Tribe of the SF Bay Area, North Valley Yokuts Tribe, The Ohlone Indian Tribe, Wuksache Indian Tribe/Eshom Valley Band, The Confederated Villages of Lisjan, and Tamien Nation. No consultation has been requested at the time of publication of this document. Tribal responses, if any, would be considered by the City and incorporated as part of the final project approvals. Further, the areas considered as part of the proposed project were analyzed under the General Plan EIR and for which tribal consultation as required by SB 18 for the General Plan EIR was also completed and for which an opportunity to consult and address potential impacts was provided. No previously unidentified tribal cultural resources within the city have been identified during consultation, nevertheless, future development facilitated by the HOD would be required to comply with applicable State regulations including the City's municipal code, and General Plan policies and actions. Therefore, the proposed project would not introduce new impacts

or substantially increased impacts related to tribal cultural resources compared to those identified in the General Plan EIR.

Conclusion

The HOD would not result in new impacts not addressed or analyzed in the General Plan EIR nor present new information that indicates that impacts would be more significant than those described in the General Plan EIR. Therefore, the impacts of the HOD would be within the scope of the General Plan EIR and no additional environmental assessment of utilities is required.

4.19 Utilities and Service Systems

General Plan EIR Findings

Utilities and services systems are discussed in Section 3.15, *Utilities and Service Systems*, of the General Plan EIR. The General Plan EIR determined that General Plan implementation would result in sufficient water supplies available to serve the City and the impacts related to construction of new water treatment facilities or expansion of existing facilities would be less than significant. The General Plan EIR further determined that impacts related to wastewater treatment capacity, the relocation or construction of new or expanded wastewater facilities, and the relocation or construction of new or expanded storm water drainage facilities would be less than significant.

The General Plan EIR determined that General Plan implementation would comply with federal, state, and local management and reduction statutes and regulations related to solid waste and would not generate solid waste in excess of State or local standards, or in excess of the capacity of local infrastructure, or otherwise impair the attainment of solid waste reduction goals. Impacts were determined to be less than significant.

The General Plan EIR stated that future development would be required to connect to existing water distribution infrastructure, pay the applicable water system connection fees and water usage rates, and demonstrate how storm water runoff will be detained or retained on-site and/or conveyed to the nearest drainage facility as required by the City's NPDES Municipal Regional Permit.

Addendum Analysis

The proposed project could result in a net increase of up to 266 new residential units and a net reduction of approximately 2,840,000 square feet of non-residential space overall compared to the General Plan EIR. Population growth resulting from development allowed under the proposed project would increase demand for utilities including water, wastewater, natural gas, electricity, telecommunications, and solid waste.

Population growth resulting from residential development under the proposed project would incrementally increase demand for municipal facilities. However, this increased demand would be incremental, and partially offset by the proposed reduction of approximately 2,840,000 square feet of non-residential space compared to the General Plan EIR. Additionally, increased demand associated with population growth under the proposed project would be further offset by the project's reduction in non-residential space. The HOD would allow for denser residential development within the NCMU and TC zones, which would promote greater overall efficiency in community and municipal operations. All potential parcels within both zoning districts are located within the city limits and urbanized areas where existing infrastructure is already present.

Future development facilitated by the HOD would be required to adhere to Federal, State, regional, and City regulations, General Plan actions and policies, and the City's municipal code including applicable fees and NPDES permits. The project would not therefore require the expansion or relocation of these facilities such that significant environmental effects would occur. Therefore, the proposed project would not introduce new impacts or substantially increased impacts related to utilities and service systems compared to those identified in the General Plan EIR.

Conclusion

The HOD would not result in new impacts not addressed or analyzed in the General Plan EIR nor present new information that indicates that impacts would be more significant than those described in the General Plan EIR. Therefore, the impacts of the HOD would be within the scope of the General Plan EIR and no additional environmental assessment of utilities is required.

4.20 Wildfire

General Plan EIR Findings

Wildfire is discussed in Section 3.16, *Wildfires*, of the General Plan EIR. The General Plan EIR determined that there are some State Responsibility Areas to the east of the city limits within the SOI. However, there are no State Responsibility Areas within the city limits of Milpitas, and there are no "Very High Fire Hazard" areas within the Milpitas SOI. The General Plan EIR determined that impacts would be less than significant regarding adopted emergency response plan or emergency evacuation plan, hazards due to flooding or landslides, the installation or maintenance of associated infrastructure that may exacerbate fire risk. The General Plan EIR further determined that General Plan implementation would not exacerbate wildfire risks, or thereby expose project occupants to pollutant concentrations from a wildfire or the uncontrolled spread of a wildfire and impacts would be less than significant.

Addendum Analysis

None of the potential parcels identified within the TC or NCMU zones are located within a State Responsibility or Very High Fire Hazard Severity Zone (VHFSZ) (California Department of Forestry and Fire Protection 2007). The closest mapped VHFHSZ is located over four miles southeast near Alum Rock Park; thus, sites where housing is encouraged by the HOD are not near a VHFHSZ. In addition, the immediate surrounding area to where districts are located is developed with urban land uses and is generally level. The proposed project may result in additional housing units on certain parcels. However, development would still occur in the same areas as analyzed in the General Plan. Moreover, since the new housing would be located within areas with existing connections to transit and utilities, they would not require the installation of new infrastructure such as roads, which could exacerbate fire risk. Applications for development would be reviewed by the Milpitas Fire Department for compliance with applicable emergency response plans and requirements to reduce fire hazards. Future development facilitated by the HOD would be required to adhere to any Federal, and State and regulations, including the California Building Code, and California Fire Code, Public Resources Code Section 4292, Public Resources Code Section 4293, and Title 14, Section 1104.1(d) of the California Code of Regulations. Future development would also be required to comply with General Plan actions and policies, Zoning Ordinance, and the City's municipal code, including Title 5 – Public Health, Safety and Welfare (Chapter 300 Fire Code).

Therefore, the proposed project would not introduce new impacts or substantially increase impacts related to wildfire compared to those identified in the General Plan EIR.

Conclusion

The HOD would not result in new impacts not addressed or analyzed in the General Plan EIR nor present new information that indicates that impacts would be more significant than those described in the General Plan EIR. Therefore, the impacts of the HOD would be within the scope of the General Plan EIR and no additional environmental assessment of wildfire is required.

5 Summary of Findings

The City of Milpitas, acting as the lead agency, determined that an addendum is the appropriate environmental document under CEQA because the proposed project would not require revisions to the certified General Plan EIR due to the involvement of new significant environmental effects or substantial increases in the severity of significant effects previously identified in the General Plan EIR.

There are no changed circumstances or new information that meets the standards for requiring further environmental review under *CEQA Guidelines* Section 15162. Thus, these circumstances and information would not result in new or more severe impacts beyond what were addressed in the General Plan EIR and would not meet any other standards under *CEQA Guidelines* Section 15162(a)(3). No additional analysis is required based on the discussions throughout this addendum. The proposed Housing Opportunity District Project would not involve development in areas not assumed for development in the General Plan EIR. The project would not result in significant or substantially more severe impacts that were not discussed in the General Plan EIR. Also, there are no previously identified significant effects which, as a result of substantial new information that was not known at the time of the previous environmental review, would be substantially more severe than discussed in the General Plan EIR. Accordingly, no additional CEQA review is required.

CEQA Guidelines Section 15164 states that "[t]he lead agency or a responsible agency shall prepare an addendum to a previously certified EIR if some changes or additions are necessary but none of the conditions described in *CEQA Guidelines* Section 15162 calling for preparation of a subsequent EIR have occurred." An addendum is therefore appropriate because, as explained above, none of the conditions calling for preparation of a subsequent EIR have occurred.

6 References

6.1 Bibliography

Association of Bay Area Governments (ABAG). 2020. Plan Bay Area 2050 - The Final Blueprint Growth Pattern. https://www.planbayarea.org/sites/default/files/FinalBlueprintRelease_December2020_GrowthPattern_Jan2021Update.pdf. (accessed January 2024).

California Department of Finance (DOF). 2023 E-5 Population and Housing Estimates for Cities, Counties, and the State, 2020-2023. May 2023. https://dof.ca.gov/forecasting/demographics/estimates/e-5-population-and-housing-estimates-for-cities-counties-and-the-state-2020-2023/ (accessed January 2024).

California Department of Transportation (Caltrans). 2018. California State Scenic Highway System Map. https://caltrans.maps.arcgis.com/apps/webappviewer/index.html?id=465dfd3d807c46cc8e8057116f1aacaa (accessed February 2024).

California Department of Forestry and Fire Protection. 2007. FHSZ Viewer. https://egis.fire.ca.gov/FHSZ/ (accessed January 2024).

Milpitas, City of. 2021. Milpitas General Plan. Adopted March, 2021. https://static1.squarespace.com/static/57277b461d07c02f9c2f5c2c/t/60906e6349539311604cae70/1620078198914/Milpitas+General+Plan_Final_online+version.pdf (accessed January 2024).

_____. 2022. 2023-2031 Housing Element, HCD Review Draft. October 2022. https://milpitashousingelement.com/wp-content/uploads/2022/10/Milpitas_HE_HCD_Draft_2022_10.pdf (accessed January 2024).

6.2 List of Preparers

Rincon Consultants, Inc. prepared this Addendum under contract to the City of Milpitas. Persons involved in data gathering analysis, project management, and quality control are listed below.

RINCON CONSULTANTS, INC.

Abe Leider, AICP CEP, Principal-in-Charge
Gianna Meschi, Project Manager
Amber McEldowney, Environmental Planner

Rincon Consultants, Inc.
66 Franklin Street, Suite 300
Oakland, California 94607
510-834-4455

February 14, 2025
Project No: 21-11808

Chris Sensenig
Raimi & Associates, Inc.
1900 Addison Street, #200
Berkeley, California 94707
Via email: chris@raimiassociates.com

Subject: City of Milpitas Housing Opportunity Zone Project Supplemental Letter to the EIR Addendum – Minor Project Revisions

Dear Mr. Sensenig:

The purpose of this letter is to provide supplemental analysis to the City of Milpitas Housing Opportunity Zone Project Addendum, which was prepared in April 2024 and analyzes the potential impacts of the proposed Housing Opportunity Zone Project in relation to the analysis in the City of Milpitas General Plan Update EIR that was certified in 2021. The supplemental analysis is necessary to determine whether revisions to the proposed project that were made in January 2025 substantially affect the analysis or conclusions of the Addendum.

Summary of Proposed January 2025 Project Revisions

After gathering feedback from the community and holding discussions with landowners, the City re-evaluated the likely redevelopment scenario. This re-evaluation led to adjustments in the densities and sites involved in the project. The revised focus of this analysis considers a more conservative approach.

Changes outlined in the January 2025 Staff Recommended Zoning (henceforth referred to as "January 2025 zoning revisions") compared to the proposed project as analyzed in the April 2024 Addendum ("Addendum") include the following items:

- Reduction of dwelling units per acre (du/ac) in the NCMU district from 65 du/ac to 60 du/ac
- Reduction in maximum height in NCMU zones from 75 feet/6 stories to 60 feet/5 stories
- Increase of dwelling units per acre (du/ac) in the TC district from 55 du/ac to 65 du/ac

Comparison of January 2025 Project Revisions to the Addendum Analysis

The issue areas that were analyzed in the Addendum are discussed below with respect to the proposed project changes. No substantial changes have occurred in respect to environmental conditions; however, the projected overall number of net new residential units under the January 2025 zoning revisions has decreased compared to the Addendum analysis. The Addendum assumed a net increase of 266 residential units[1], and a net reduction of approximately 2,840,000 square feet of non-residential space overall compared to the General Plan EIR. The January 2025 zoning revisions assume reduced growth compared to the Addendum and would result in a maximum net decrease of

[1] 266 units = 317 units – 51 units

approximately 260 units[2], and a net reduction of approximately 2,840,000 square feet of non-residential space overall compared to the General Plan EIR.

The January 2025 zoning revisions compared to the Addendum and General Plan EIR buildout are shown below in Table 1. As shown therein, the Addendum anticipated approximately 2,908 new units compared to existing conditions across both districts. The January 2025 zoning revisions would result in approximately 2,156 new units compared to existing conditions across both districts. Accordingly, the proposed revisions would result in a decrease compared to the Addendum assumptions and would be within the General Plan EIR projections. Similarly, the net reduction of approximately 2,840,000 square feet of non-residential space remains unchanged from the project as analyzed in the Addendum and is consistent with the General Plan EIR projections.

Table 1 Buildout Compared to April 2024 Addendum and General Plan EIR

	Non-residential space (square feet)	Residential units (du)
TC		
Existing	1,426,803	0
General Plan EIR Buildout Assumption	1,600,000	1,064
April 2024 Addendum Buildout Assumption Proposed TC from existing (change from GP EIR)	**-262,085** (Δ -0.44 million)	**+1013** (Δ -51)
Staff Zoning Recommendation Proposed TC from existing (change from GP EIR)	**-262,085** (Δ -0.44 million)	**+786** (Δ -278)
NCMU		
Existing	987,077	0
General Plan EIR Buildout Assumption	3,200,000	1,578
April 2024 Addendum Buildout Assumption Proposed NCMU from existing (change from GP EIR)	**-206,091** (Δ -2.4 million)	**+1,895** (Δ +317)
Staff Zoning Recommendation Proposed TC from existing (change from GP EIR)	**-206,091** (Δ -2.4 million)	**+1,040-1,300** (Δ -538-278)

Δ = change
Source: Raimi & Associates 2025

[2] 260 units = -538 units + 278 units

The issue areas analyzed in the Addendum, such as traffic, air quality, noise, and public services, were based on the assumption of a net increase of 266 residential units and a net reduction of approximately 2,840,000 square feet of non-residential space compared to the General Plan EIR. The January 2025 zoning revisions, however, project a reduced growth scenario with a maximum net decrease of approximately 260 residential units and the same net reduction of non-residential space. This reduction in residential units means fewer new residents, which translates to less demand on infrastructure, public services such as police, fire and library services, and utilities such as water supply and water and wastewater conveyance and treatment. Fewer residents would also result in reduced local vehicle and other trips. Consequently, the impacts on traffic congestion, vehicle miles travelled, air quality, greenhouse gas emissions, energy demand, noise levels, and public service demand would be similar to or reduced compared to those as previously analyzed. Additionally, since the ground disturbance and location of development would remain the same, the impacts to biological resources, cultural resources, hazards and hazardous materials, geology and soils, hydrology and water quality, and tribal cultural resources would also remain consistent with the analysis in the Addendum. The unchanged environmental conditions and the reduced buildout further support the conclusion that the impacts would not be more significant than those previously analyzed, and the conclusions of the Addendum remain valid.

Conclusion

In conclusion, the proposed zoning changes and the January 2025 zoning revisions would result in a reduced buildout compared to the Addendum analysis. This reduction in residential units and the consistency in non-residential space reduction ensure that the impacts would be less significant, as previously analyzed, and similar to or reduced compared to the Addendum conclusions. Additionally, the proposed changes are consistent with the overall land use and growth projections assumed within the General Plan EIR, which has already accounted for and mitigated potential environmental impacts. Since the environmental conditions have not changed since the April 2024 Addendum, the baseline conditions for analyzing impacts remain the same. Consequently, the reduced buildout further supports the conclusion that the impacts would be less significant, and the conclusions of the Addendum remain valid.

Sincerely,
Rincon Consultants, Inc.

Gianna Meschi
Project Manager/Environmental Planner
gmeschi@rinconconsultants.com

Abe Leider, AICP CEP
Principal
aleider@rinconconsultants.com

NOTES:

New text that applies to NCMU and TC zones in **BLACK**.
Text that applies only to other mixed-use zones in GREY.

Updated General Plan Designations follow Zones and standards.

Section 6 Mixed Use Zones and Standards*

* Prior ordinance history: Ords. 38, 38.18, 38.19, 38.22, 38.207, 38.339, 38.687, 38.702, 38.761, 38.763 and 38.776.

XI-10-6.01 Purpose and Intent

A. Mixed Use ("MXD") Zoning District. The purpose of the MXD zoning district is to encourage a compatible mix of residential, retail, entertainment, office and commercial service uses within the framework of a pedestrian-oriented streetscape. It is intended that the residential and commercial use allowed in the "MXD" District combine to provide for an "around-the-clock-environment" with urban open areas (i.e. plazas, squares) that serve multiple purposes and can be used for special events.

B. High Density Mixed Use ("MXD2") Zoning District. The purpose of the MXD2 zoning district is to encourage a mix of retail, restaurant, entertainment, and commercial service uses on the ground floor with residential or office uses on the floors above while maintaining a pedestrian-oriented streetscape. It is intended that the retail or restaurant space required will ensure neighborhood-oriented retail and services are provided within walking distance of high density residential development.

C. Very High Density Mixed Use ("MXD3") Zoning District. The purpose of the MXD3 zoning district is to provide very-high density housing, retail and employment uses.

D. Neighborhood Commercial Mixed Use (“NCMU”) Zoning District. The purpose of the NCMU zoning district is to encourage a compatible mix of residential, retail, entertainment, office, and commercial uses, with an emphasis on commercial activity as the primary use. It is intended that the neighborhood-serving active uses such as grocery stores, retail, restaurants, and personal services at key locations on the ground level will help create a pedestrian oriented streetscape and public spaces. The NCMU Zoning District is subdivided into three subdistricts:

1. NCMU1 allows commercial or mixed-use development with the primary function as a commercial center to provide goods and services to the immediate neighborhood. The mix of uses may be vertical or horizontal.

2. NCMU2 allows commercial or mixed-use development with some active commercial storefronts along the street frontages.

3. NCMU3 allows commercial, mixed use, or residential only development with no minimum commercial FAR. NCMU3 includes parcels that are less suitable for commercial use, such as those located on secondary streets, lacking street frontages, or adjacent to residential zones.

E. Town Center (TC) Zone. The purpose and intent of this zone is to provide for an area that supports a wide range of administrative, business, entertainment, dining, and cultural activities along with some residential uses in the geographic center of the City to suit the varying lifestyles of residents and visitors alike. The area is easily accessible via the City's transportation network. The TC Zoning District is subdivided into three subdistricts:

1. TC1 allows commercial or mixed-use development with the primary function as a commercial center to provide goods and services to the immediate neighborhood and larger community. The mix of uses may be vertical or horizontal.

2. TC2 allows commercial or mixed-use development with some commercial storefronts along the street frontages

3. TC3 allows commercial, mixed-use or residential only development with no minimum commercial FAR. TC 3 includes parcels that are less suitable for retail uses, such as those located on secondary streets, lacking street frontages, or adjacent to residential zones.

(Ord. No. 38.803, § 7, 4/17/12; Ord. 38.777 (8) (part), 6/17/08)

XI-10-6.02 Mixed Use Regulations

A. Permitted and Conditionally Permitted Uses.

1. Primary uses. The uses identified in Table 6.02-1, Mixed Use Zone Uses, shall be the primary uses allowed to occur on a property. All uses except for those noted shall be conducted within enclosed structures. The primary uses identified in Table 6.02-1 shall be permitted or conditionally permitted, as indicated:

P	Where the symbol "P" appears, the use shall be permitted.
MCS	Where the symbol "MCS" appears, the use shall be permitted subject to the issuance of a Minor Conditional Use Permit by staff, in accordance with Section 57.04, Conditional Use Permits and Minor Conditional Use Permits, of this chapter.
P/C	Where the symbol "P/C" appears the use may be permitted if certain criteria is met or otherwise a Conditional Use Permit shall be required, in accordance with Section XI-10-57.04, Conditional Use Permits, of this Chapter.
C	Where the symbol "C" appears, the use shall be permitted subject to the issuance of a Conditional Use Permit, in accordance with Section 57.04, Conditional Use Permits and Minor Conditional Use Permits, of this chapter.
MC	Where the symbol "MC" appears, the use shall be permitted subject to the issuance of a Minor Conditional Use Permit, in accordance with Section 57.04, Conditional Use Permits and Minor Conditional Use Permits, of this chapter.
O	Where the symbol "O" appears, the use is subject to an alternative review process described in a subsequent footnote.

2. Accessory Uses.

a. Massage Services. Massage services may be allowed as an accessory use to any permitted or conditionally permitted medical office, medical clinic, chiropractor practice, acupuncture practice, physical therapist, fitness and athletic facility, health care facility (such as hospitals,

nursing homes and sanitariums), and accredited school, college, and university. Massage services, limited to massage of the head, neck, shoulders, hands and feet may be allowed as an accessory use to any permitted or conditionally permitted beauty salon, barbershop, and healing art practices. This section shall not exempt any person or business from complying with all the provisions of Title III, Chapter 6.

B. Prohibited Uses. The following uses are prohibited:

1. Uses where the symbol "NP" appears within Table 6.02-1.

2. The following uses are not permitted in any mixed use zone:

a. Adult Businesses as defined in Subsection 13.04, Adult Businesses, of this Chapter.

b. Disinfecting and extermination business.

c. Ground level residential in the Ground Level Commercial Area as shown on the Midtown Specific Plan Land Use Map, Figure 3.1 and Zoning Map.

d. Outdoor storage of vehicles.

e. Private self-storage facilities

f. Single family detached dwellings

g. Two family dwelling units

C. Other Uses. Any other uses may be considered by the Planning Commission that are similar in accordance with the procedure, prescribed in Subsection 10-54.02, Other Uses Permitted by Commission, of this Chapter.

Table XI-10-6.02-1
Mixed Use Zone Uses

Use	MXD	MXD2		MXD3	NCMU1,2,3	TC1,2,3
		Ground Level (Facing Retail street)	Upper Floor			
1. Commercial Uses						
Alcohol beverage sales	C	C	C	C	C	C
Business support services[1]	P/NP[2]	P/NP[2]	NP	P/NP[2]	P/NP[2]	MC
Grocery stores (supermarkets)[3]	C	C	C	C	P	P
Pawnshops[4]	C	C	C	C	NP	NP
Personal services[1, 5]	P	P	P	P	P	P
Pet shops	C	NP	NP	NP	NP	P
Repair and cleaning shop, small items[1]	P	P	P	MC	MC	P
Retail stores, general merchandise[6]	P	P	MCS	MCS	P	P
Thrift shops (used merchandise)						
Retail	P	P	P	P	P	P
With collections	C	C	C	C	C	NP

Drive Through Uses	NP	NP	NP	NP	NP	C
2. Entertainment and Recreation						
Commercial athletic facilities	P	P	P	P	MCS in NCMU1	P
"Theaters (Indoor)"						
Recreation or entertainment facility	C	C	C	C	NP	C
3. Health and Veterinarian Uses						
Animal grooming (no boarding)	P	P	NP	P	NP	P
Hospitals or sanitariums[7]	C	C	C	C	NP	C
Massage establishment[8]	MC	MC	MC	MC	MC	MC
Massage establishment, accessory[8]	MCS	MCS	MCS	MCS	MCS	MCS
Medical or dental offices and clinics	P	NP	P	P	P (upper floors) MCS (ground floor)	P
Medical support laboratories	P	P	P	P	NP	C
Optician and optometrist shop	P	P	P	P	P (upper floors) MCS (ground floor)	P
Pharmacy or drug store	P	P	P	P	P	P
Veterinarian clinic	P	P	P	P	NP	P
4. Lodging						
Bed and breakfast	P	P	NP	NP	NP	NP
Boarding houses (3 or more persons)	C	C	C	C	C	C
Group dwellings	C	C	C	C	C	C
Hotels	C	P	P	P	C	P
Motels	C	C	C	C	NP	NP
5. Professional Offices, Financial Institutions and Related Uses						
Financial institutions (banks, savings and loans, etc.)	MCS	NP	MCS	P	P	P
Offices, business and professional[6]	MCS	NP	MCS	P	C	P
6. Public/Quasi Public and Assembly Uses						
Child care						
Child care center	C	P	C	P	C	C
Day care school	C	C	C	C	C	C
Large family child care home	P	P	C	P	P	P
Small family child care home	P	P	P	P	P	P
Instruction						

Group[6]	P	NP	NP	NP	P	P
Private	P	P	P	P	P	P
Park, playground or community center[10]	O	O	O	O	O	O
Places of assembly[7]	C	C	C	C	C	C
Public utilities	C	C	C	C	C	C
Schools, private (elementary, middle and high)[5]	C	C	C	C	C	C
Theaters (Indoor)	C	C	C	C	NP	C
Trade and vocational schools[7]	C	C	C	C	NP	C
Transportation facilities[4]	C	C	C	C	NP	C
7. Residential Uses						
Multi-family housing[11]	P	NP[12]	P	P	P[12]	P
Transitional and supportive housing[11]	P	NP[12]	P	P	P[12]	P
Accessory Dwelling Unit[14]	P	NP	P	P	P	P
8. Restaurants or Food Service						
Bar or nightclub	C[15]	C[15]	C	C[15]	C[15]	C
Brewery/Eateries	MCS	MCS	NP	MCS	MCS	MCS
Catering establishments	C	C	C	C	NP	P
Restaurants[4]	P/C	P/C	NP	P/C	P/C	P
With music (indoor/outdoor)	P[15]	P[15]	NP	P[15]	P[15]	P
With other live entertainment/dancing	C	C	NP	C	C	C
Mobile Food Vending (individual vehicle)[16]	P	P	NP	P	P	P
Mobile Food Park[16]	MC	NP	NP	MC	NP	MC
Commissary	MC	NP	NP	MC	NP	MC
9. Unclassified Uses						
Artisan Studios & Live-work units, woodworking or glassworking, plumbing or metalworking and sign shops[4]	MCS	MCS	MCS	MCS	MCS	MCS
Lobbies and entries for upper floor uses	P	P	NP	P	P	P
Model home complex[17]	P	P	P	P	P	P
Mixed use developments[18]	P	P	P	P	P	P
Planned Unit Development[19]	P	P	P	P	P	P
Temporary seasonal sales[20]	P	P	P	P	P	P
Short-Term Rentals[21]	P	NP	P	P	P	P
10. Vehicle-Related Repair, Sales and Services						
Auto sales and rental[22]	C	C	C	C	NP	NP

Auto broker (wholesale, no vehicles on site)[4]	MCS	MCS	MCS	MCS	NP	MCS
Vehicle service uses[23]	C	NP	NP	C	NP	C

[1] Refer to Subsection XI-10-6.02-1(B), Performance standards for certain uses, of this Chapter, for standards.

[2] Copy/quick-printing shops and mailbox rental facilities shall be permitted in all MXD, MXD2 (Ground Floor), MXD3, and all NCMU zones. All other uses classified as Business Support Services shall not be permitted in these zones.

[3] Grocery stores with floor area up to 15,000 square feet are permitted. Grocery stores exceeding 15,000 square feet may be permitted subject to the approval of a Conditional Use Permit pursuant to Subsection XI-10-57.04 of this Chapter.

[4] Refer to Subsection XI-10-6.02-1, Special Uses, of this Chapter, for standards.

[5]When located on the ground floor, retail sales of products related to the Personal Services provided shall be offered at the front of the premises near a pedestrian entrance and shall comprise at least 10 percent of the floor area of the business establishment.

[6] Refer to Subsection XI-10-6.02-1(B) Performance standards for certain uses, of this Chapter.

[6 7] Refer to Subsection XI-10-6.02-2, Quasi-Public Uses, of this Chapter, for standards.

[8]Massage establishments are subject to Title III, Chapter 6 of the Milpitas Municipal Code and Subsection XI-10-13.16 of this title. Refer to Subsection XI-10-13.16, of this Title, for special provisions for massage establishments.

[10] For parks, playgrounds or community center owned and operated by a government agency or a nonprofit community organization.

[11] Ground level residential is prohibited in the Ground Level Commercial Area as shown on the Midtown Specific Plan Land Use Map, Figure 3.1.

[12] Uses serving upper-floor residential uses, such as common gathering space, lobby, and resident services, may be allowed as ground floor uses where residential uses would otherwise not be permitted.

[14]Only allowed within multi-family dwellings, subject to the requirements of Subsection XI-10-13.08, Accessory Dwelling Units, of this Chapter.

[15] Indoor or outdoor music is permitted as an accessory use on the same parcel in conjunction with a restaurant or bar that is a principal permitted use or approved conditional use in the MXD, MXD2, MXD3, and NCMU zones. See also Subsection XI-10-6.06(B) for additional regulations.

[16]Refer to Subsection XI-10-13.18, Mobile Food Vending, of this Chapter.

[17]Refer to Subsection XI-10-13.11(E), Model Home Complexes and Sales Offices, of this Chapter for temporary tract offices.

[18]Which include only permitted uses.

[19]Refer to Section XI-10-54.07, Planned Unit Developments, of this Chapter, for standards.

[20]Refer to Section XI-10-13.11(D), Temporary Seasonal Sales, of this Chapter.

[21]Only allowed within a dwelling unit, subject to the requirements of Subsection XI-10-13.17, Short-Term Rentals, of this Chapter.

[22]New and used auto, recreational vehicle and boat sales, excluding commercial vehicles, trucks, buses, vans, and farm equipment, with accessory repairs and services, only allowed if fully enclosed within a building. Bicycle and auto rental agency, excluding commercial vehicles, trucks, buses, vans, boats and RV rentals, only if fully enclosed within a building.

[23]Refer to Subsection XI-10-6.02-2, Special Uses, of this Chapter, for standards. Service stations shall follow the "General development policy: Gasoline service stations, and automotive service centers" adopted by the City Council on December 19, 1995.

6.02-1 Mixed Use Zone Special Uses

A. Special Uses within all MXD zones. Certain uses noted in Table 6.02-1, Mixed Use Zone Uses may be allowed through the approval of a Conditional Use Permit and Minor Conditional Use Permits, in accordance with Subsection 57.04, Conditional Use Permits, of this Chapter, if they are not located within one thousand (1,000) feet of another same use listed below. This distance shall be measured from the property line of the parcel where such use is located.

   1. Auto service uses, including but not limited to: gasoline service stations, car washes, tire shops, towing without vehicle storage and auto repair shops of all kinds, radiators, paint, body, glass, brakes, upholstery, and other similar types.

2. Local transportation service facilities (e.g. taxi, parcel service, ambulance, armored car, and van storage) without outdoor storage of vehicles.

3. Pawnshops.

B. Performance Standards for Certain Uses. For uses requiring approval of a Minor Conditional Use Permit by staff, in accordance with Section XI-10-57.04, Conditional Use Permits and Minor Conditional Use Permits, of this Chapter, the following performance standards below shall be met.

1. Auto Brokers. Auto Brokers may be permitted by right if the following standards are met:

a. Local Sales and Use Tax. In order to assist the City of Milpitas in its efforts to receive direct distribution of the local tax on materials associated with the project, the California Sales and Use Tax (the "Local Tax") shall be allocated to the project site, to the extent reasonably possible. Evidence of tax allocation or cause as to why such allocation cannot be made shall be submitted at the time of business license submittal.

2. Auto Service Uses. Auto Service uses shall comply with the following standards:

a. All operations shall be conducted completely within an enclosed building.

b. Entrances to the service bays shall not be open to the street but shall be designed to face the rear or interior side property line.

3. Artisans, Plumbing, Metalworking, Sign Shops and Woodworking or glass working shops. These uses shall comply with the following standards:

a. All operations shall be conducted completely within an enclosed building.

b. There shall be no dust, fume, or odor either emitted from the premise.

c. The operations shall not create excessive vibrations.

d. The operations shall be consistent with the City's noise standards.

e. Plumbing, metalworking, sign shops, woodworking or glass working shops shall not be closer than 1,000 feet of another same use measured from the property line.

4. Personal Services, Business Support Services, and Repair and Cleaning-Small Items uses shall comply with the following:

a. When located within the MXD zone:

i. Located in the area designated for ground floor retail and are less than or equal to ten thousand (10,000) square feet in gross floor area;

ii. Located in the areas not designated for ground floor retail and are less than or equal to fifty thousand (50,000) square feet in gross floor area.

b. When located within the MXD2 and MXD3 zones they are less than or equal to fifty thousand (50,000) square feet in gross floor area;

c. They are not open past 10:00 p.m.;

d. They are not specifically noted in Table 6.02-1, Mixed Use Zone Uses, of this chapter, requiring Conditional Use Permit approval or listed as a prohibited use;

e. They are not listed as a prohibited use in Section 10-6.02 (B), Prohibited Uses, of this Chapter.

If items a through c above are not met, then approval of a Conditional Use Permit is required in accordance with Subsection 57.04, Conditional Use Permits and Minor Conditional Use Permits, of this Chapter. Exceptions to the requirement for a Conditional Use Permit for such uses may be

granted at the discretion of the Planning Director on a case-by-case basis, based upon a review of site-specific conditions.

5. Group Instruction uses shall comply with the following standards:

   a. No loitering shall be permitted before or after any classes or sessions.

6. Restaurants may be permitted provided:

   a. They have only ancillary on-premise consumption of beer and wine associated with food sales;

   b. They have no separate bar area;

   c. When located within the MXD2 and MXD3 zones they are located on the ground floor facing a public street designated as a retail mixed use street; and

   d. They conform to the performance standards listed in this subsection (e) below.

   If items (a) through (c) above are not met, then approval of a Conditional Use Permit is required in accordance with Section 57, of this Chapter.

   e. Restaurant Performance Standards. Restaurants shall comply with the following performance standards:

      i. Seating shall not exceed that which the amount of parking allocated for the restaurant space would allow. A sign measuring at least one (1) foot by one (1) foot, with a lettering height of at least three (3) inches, shall be placed in a conspicuous location near the restaurant front entrance stating the maximum total seating allowed. Outdoor seating is allowed if it has been approved as part of the facility's Minor Site Development Permit or Site Development Permit and is operated in conformance with any conditions of that approval.

      ii. The restaurant shall comply with the City Council's Guidelines for Recycling Enclosures (Resolution No. 6296).

      iii. The restaurant shall incorporate measures to reduce odors to acceptable levels, including, but not limited to, installation of a scrubber, carbon filter or similar equipment, on the roof vent to control odors.

      iv. All the facility's floor drains, trash compactors and indoor mat and equipment washing areas shall be drained to the sanitary sewer.

      v. Where applicable, the restaurant shall maintain an active account with a tallow hauling company.

      vi. The restaurant shall prepare and implement a program assigning restaurant staff responsibility for complying with the following guidelines which shall be adhered to while the restaurant is in operation:

         1) Wash all containers and equipment in the kitchen areas so that wash water may drain into the sanitary sewer.

         2) Keep garbage dumpsters clean inside and out; replace very dirty dumpsters with new, clean ones.

         3) Double bag waste to prevent leaking.

         4) Place, do not drop or throw, waste-filled bags, to prevent leaking.

         5) Keep the ground under and around the garbage dumpsters swept.

6) Sprinkle the ground lightly after sweeping with a mixture of water and a little bleach.

7) Hold training sessions to instruct employees on the proper procedures in the handling and disposal of food items; the general maintenance and use of the compactor and any other procedures that would assist the business in complying with all State and local health and sanitation standards. A record of such training must be kept to prove compliance with this requirement.

8) Post signs (in English and multi-lingual) inside the premises for all employees identifying procedures for food delivery and garbage disposal.

9) All garbage bins shall be stored in the garbage enclosure except for the twelve (12) hours immediately before and after garbage collection.

7. Retail and Offices shall comply with the following:

a. When located within the MXD zone:

i. Located in the area designated for ground floor retail and are less than or equal to ten thousand (10,000) square feet in gross floor area;

ii. Located in the areas not designated for ground floor retail and are less than or equal to fifty thousand (50,000) square feet in gross floor area.

b. When located within the MXD2 and MXD3 zones they are less than or equal to fifty thousand (50,000) square feet in gross floor area; d. They are not open past 10:00 p.m.;

e. They are not specifically noted in Table 6.02-1, Mixed Use Zone Uses, of this Chapter, requiring Conditional Use Permit approval or listed as a prohibited use; and

f. They are not listed as a prohibited use in Section 10-6.02 (B), Prohibited Uses, of this Chapter.

If items a through c above are not met, then approval of a Conditional Use Permit is required in accordance with Section 57, Conditional Use Permits and Minor Conditional Use Permits, of this Chapter.

C. Mixed Use and Residential-Only Development Projects in the NCMU and TC zones.

1. Mixed use developments in the NCMU and TC zones shall provide commercial or active spaces designed to accommodate neighborhood-serving commercial uses at the ground level, and may include residential units. A proposed project in NCMU1, NCMU2, TC1, and TC2 shall include a minimum non-residential component in full compliance with the requirements of its zoning district as defined in section 11-10-6.04 Mixed Use Zone General Development Standards.

2. 100% affordable developments in NCMU1, NCMU2, TC1, and TC2 are exempt from the minimum non-residential requirement.

a. 100 percent of the residential units must be affordable to low-income (earning up to 80 percent of area median income) and/or very low income (earning up to 50 percent of area median income) households, as defined by the U.S. Department of Housing and Urban Development.

b. Affordability requirements shall be administered through a deed restriction, such as a restrictive covenant or other legally enforceable recorded instrument, for a minimum term of 55 years.

6.02-2 Quasi-Public Uses within MXD, NCMU, and TC Zones

A. Churches and religious institutions are permitted in any location within the MXD, NCMU, and TC Zones.

B. The following quasi-public uses may be permitted within the MXD zones provided their location is first approved by the Planning Commission, in accordance with Subsection 57.04, Conditional Use Permits and Minor Conditional Use Permits, of this Chapter, and they are not located within 1,000 feet of the parcel boundary of another quasi-public use listed below. This distance shall be measured from the property line of the parcel where such use is located.

1. Places of meeting or assembly, such as auditoriums, banquet halls, and fraternal or union halls. 2. Hospitals or sanitariums.
3. Private elementary, middle or high schools.
4. Vocational schools, if not found objectionable due to noise, odor, vibration or other similar health, safety and welfare basis.

(Ord. No. 38.840 , § 5, 6/16/20; Ord. No. 38.835 , § 6, 3/3/20; Ord. No. 38.839 , § 8, 12/3/19; Ord. No. 38.829, § 3, 6/6/17; Ord. No. 38.822, § 3, 5/5/15; Ord. No. 38.810, § 6, 12/3/13; Ord. No. 38.803, § 7, 4/17/12; Ord. No. 38.795, § 22, 4/6/10; Ord. 38.784 (1)—(3), 12/16/08; Ord. 38.780 (10)—(17), 8/19/08; Ord. 38.777 (8) (part), 6/17/08)

XI-10-6.03 Affordable Housing

Affordable housing units should be provided in all new housing projects. Except as provided in Subsection XI-10-6.02-1(C)(2), while twenty percent (20%) is the minimum goal, affordable unit requirements will be determined on a project by project basis, taking into consideration the size and location of the project, the type of housing unit, proximity to transit and the mix of affordable units in the vicinity.

(Ord. No. 38.803, § 7, 4/17/12; Ord. 38.777 (8) (part), 6/17/08)

XI-10-6.04 Mixed Use Zone General Development Standards

A. Standards within Specific Plan Areas. For properties located within a Specific Plan, refer to the Specific Plan for development standards. When a standard is not listed within the Specific Plan, the standards listed within the zoning ordinance shall govern.

B. General Standards. The following minimum requirements shall be observed. The minimum requirement shall be one of the following for the district classification as designated on the zoning map.

Table XI-10-6.04-1
Mixed Use Zone Development Standards

Standards	MXD	MXD2	MXD3
Non-residential lot area minimum	Individual sites shall be of such size that all space requirements provided in this section are satisfied.	Individual sites shall be of such size that all space requirements provided in this section are satisfied.	Individual sites shall be of such size that all space requirements provided in this section are satisfied.
Density, Minimum-Maximum Residential (Dwellings)[1]	21 min. 30 max. per gross acre. For additional standards refer to Section 6.04(C), Multi-Family Residential Density within the MXD, MXD2 and MXD3 zones	31 min. 40 max. per gross acre. For additional standards refer to Section 6.04(C), Multi-Family Residential Density within the MXD, MXD2 and MXD3 zones.	41 min. 60 max. per gross. For additional standards refer to Section 6.04(C), Multi-Family Residential Density within the MXD, MXD2 and MXD3 zones.

Front and Street-Side Yard Setback, Minimum	Refer to Section 6.04(D), Front and Street-Side Yard Setbacks.	Refer to Section 6.04(D), Front and Street-Side Yard Setbacks.	12 ft. min. 20 ft. max. For additional standards refer to Section 6.04(D), Front and Street-Side Yard Setbacks, of this chapter.
Interior-Side Yard Setback, Minimum[2]	Ground Level Commercial Area: 0 ft. All other areas: 10 ft.	0 ft. Except when abutting residential use and for portions of buildings over 60 ft. or four stories tall, where the interior side yards shall be a minimum of 10 ft.	10 ft. 15 ft. when abutting residential. 20 ft. for portions of buildings over 60 ft. or four stories tall.
Rear Yard Setback, Minimum[3]	10 ft.	10 ft. 15 ft. when abutting residential 20 ft. for portions of buildings over 60 ft. or four stories tall.	15 ft. 20 ft. when abutting residential 30 ft. for portions of buildings over 60 ft. or four stories tall.
Floor Area Ratio, Non-Residential and Mixed Use projects	For buildings and portions thereof: .75 max.	1.5 max. Refer to Section 6.04(E), Floor Area Ratio, Non-Residential.	2.0 max. Refer to Section 6.04(E), Floor Area Ratio, Non-Residential.
Commercial Area, Minimum	Not Applicable	200 sq. ft. of retail, restaurant, or pedestrian-oriented commercial service uses, allowed in Table 6-02-1, Mixed Use Zone Uses, must be provided for every unit, using the minimum density.	Not Applicable
Building Height[4]	Principal building: 3 stories and 45 ft.	Principal building: 6 stories or 75 ft. Principal buildings with frontage along Great Mall Parkway: 12 Stories or 150 ft. Greater height, up to 20 stories may be allowed through the approval of a Conditional Use Permit.	Principal buildings: 12 stories or 150 ft. Greater height, up to 20 stories may be allowed through the approval of a Conditional Use Permit.
Landscaping	Refer to Section 6.04(G), Landscaping.	Refer to Section 6.04(G), Landscaping.	Refer to Section 6.04(G), Landscaping.
Parking	Refer to Section 53, Off Street Parking Regulations, of this Chapter.	Refer to Section 53, Off Street Parking Regulations, of this Chapter.	Refer to Section 53, Off Street Parking Regulations, of this Chapter.

[1] For MXD3 properties, density may be averaged over contiguous parcels.

[2] To mitigate the effects of adjacent service commercial or light industrial uses, increased setbacks and other measures, such as solid six-foot fence or masonry wall, shall be considered on a case by case basis by the Planning Commission during the Site Development Permit process, taking into consideration the nature of adjacent uses.

[3] See Note 2 above.

[4] Within the MXD zone, special architectural features, such as towers or corner elements may be up to 55 ft.

Table XI-10-6.04-2
NCMU Zone Development Standards

Standards	NCMU1	NCMU2	NCMU3
Lot area minimum	None	None	None
Density, Minimum-Maximum Residential (Dwellings)[1]	Maximum: 60 du/ac	Maximum: 60 du/ac	Minimum: 30 du/ac Maximum: 60 du/ac
Front and Street-Side Yard Setback, Minimum	10' Residential 0' Commercial	10' Residential 0' Commercial	10' Residential 0' Commercial
Interior-Side Yard Setback, Minimum[2]	For residential only and mixed-use developments: 10 ft. For all other non-residential developments: None required On lots abutting a single-family residential zone: 25 ft.	For residential only and mixed-use developments: 10 ft. For all other non-residential developments: None required On lots abutting a single-family residential zone: 25 ft.	For residential only and mixed-use developments: 10 ft. For all other non-residential developments: None required On lots abutting a single-family residential zone: 25 ft.
Rear Yard Setback, Minimum[3]	For residential only and mixed-use developments: 10 ft. For all other non-residential developments: None required On lots abutting a single-family residential zone: 25 ft.	For residential only and mixed-use developments: 10 ft. For all other non-residential developments: None required On lots abutting a single-family residential zone: 25 ft.	For residential only and mixed-use developments: 10 ft. For all other non-residential developments: None required On lots abutting a single-family residential zone: 25 ft.
Floor Area Ratio, Non-Residential and Mixed Use projects[4]	No min. for commercial only project. 0.20 min. commercial for mixed use projects. Minimum commercial FAR may be calculated or distributed	No min. for commercial only project. 0.10 min. commercial for first 100 feet of parcel depth fronting a public street for mixed-use projects. *Note:*	No min. commercial FAR 0.50 max. Maximum FAR does not apply to hotels.

Standards	NCMU1	NCMU2	NCMU3
	throughout a development and across multiple adjoining parcels. 0.50 max. Maximum FAR does not apply to hotels.	Minimum commercial FAR may be calculated or distributed throughout a development and across multiple adjoining parcels and is not required to be located within first 100 feet of parcel depth. 0.50 max. Maximum FAR does not apply to hotels.	
Building Height	60’ and 5 stories	60’ and 5 stories	60’ and 5 stories
Landscaping	Refer to Section 6.04(G), Landscaping.	Refer to Section 6.04(G), Landscaping.	Refer to Section 6.04(G), Landscaping.
Parking	Refer to Section 6.04 (H) Parking.	Refer to Section 6.04 (H) Parking.	Refer to Section 6.04 (H) Parking.

[1] For NCMU3 properties, density may be averaged over contiguous parcels.

[2] To mitigate the effects of adjacent service commercial or light industrial uses, increased setbacks and other measures, such as solid six-foot fence or masonry wall, shall be considered on a case by case basis by the Planning Commission during the Site Development Permit process, taking into consideration the nature of adjacent uses.

[3] See Note 2 above.

[4] Redevelopment of an existing commercial property to include new residential uses shall calculate the minimum commercial FAR upon the redeveloped portion of the property only. The Review Authority shall have the discretion to give credit to any retained commercial areas on the same parcel or adjacent parcels under common ownership when calculating the required minimum FAR.

Table XI-10-6.04-3
TC Zone Development Standards

Standards	TC1	TC2	TC3
Lot area minimum	None	None	None
Density, Minimum-Maximum Residential (Dwellings)[1]	Maximum: 65 du/ac	Maximum: 65 du/ac	Minimum: 30 du/ac Maximum: 65 du/ac
Front and Street-Side Yard Setback, Minimum	For ground floor non-residential use: 15 ft. For ground floor residential use: 20 ft. For developments along E. Calaveras Blvd. 35 ft.	For ground floor non-residential use: 15 ft. For ground floor residential use: 20 ft. For developments along E. Calaveras Blvd. 35 ft.	For ground floor non-residential use: 15 ft. For ground floor residential use: 20 ft. For developments along E. Calaveras Blvd. 35 ft.
Interior-Side Yard Setback, Minimum[2]	For residential only and mixed-use developments: 10 ft.	For residential only and mixed-use developments: 10 ft.	For residential only and mixed-use developments: 10 ft.

	For all other non-residential developments: None required On lots abutting a single-family residential zone: 15 ft.	For all other non-residential developments: None required On lots abutting a single-family residential zone: 15 ft.	For all other non-residential developments: None required On lots abutting a single-family residential zone: 15 ft.
Rear Yard Setback, Minimum[3]	For residential only and mixed-use developments: 10 ft. For all other non-residential developments: None required On lots abutting a single-family residential zone: 15 ft.	For residential only and mixed-use developments: 10 ft. For all other non-residential developments: None required On lots abutting a single-family residential zone: 15 ft.	For residential only and mixed-use developments: 10 ft. For all other non-residential developments: None required On lots abutting a single-family residential zone: 15 ft.
Floor Area Ratio, Non-Residential and Mixed Use projects[4]	No min. for commercial only project. 0.35 min. commercial for mixed use projects. Minimum commercial FAR may be calculated or distributed throughout a development and across multiple adjoining parcels. 0.85 max. Maximum FAR does not apply to hotels.	No min. for commercial only project. 0.10 min. commercial for first 100 feet of parcel depth fronting a public street for mixed-use projects. *Note:* Minimum commercial FAR may be calculated or distributed throughout a development and across multiple adjoining parcels and is not required to be located within first 100 feet of parcel depth. 0.85 max. Maximum FAR does not apply to hotels.	No min. commercial FAR 0.85 max. Maximum FAR does not apply to hotels.
Building Height	75’ and 6 stories	75’ and 6 stories	75’ and 6 stories
Landscaping	Refer to Section 6.04(G), Landscaping.	Refer to Section 6.04(G), Landscaping.	Refer to Section 6.04(G), Landscaping.
Parking	Refer to Section 6.04 (H) Parking.	Refer to Section 6.04 (H) Parking.	Refer to Section 6.04 (H) Parking.

[1] For TC3 properties, density may be averaged over contiguous parcels.

[2] To mitigate the effects of adjacent service commercial or light industrial uses, increased setbacks and other measures, such as solid six-foot fence or masonry wall, shall be considered on a case by case basis by the Planning Commission during the Site Development Permit process, taking into consideration the nature of adjacent uses.

[3] See Note 2 above.

[4] Redevelopment of an existing commercial property to include new residential uses shall calculate the minimum commercial FAR upon the redeveloped portion of the property only. The Review Authority shall have the discretion to give credit to any retained commercial areas on the same parcel or adjacent parcels under common ownership when calculating the required minimum FAR.

NCMU2 and TC2 Minimum Commercial Floor Area Diagram

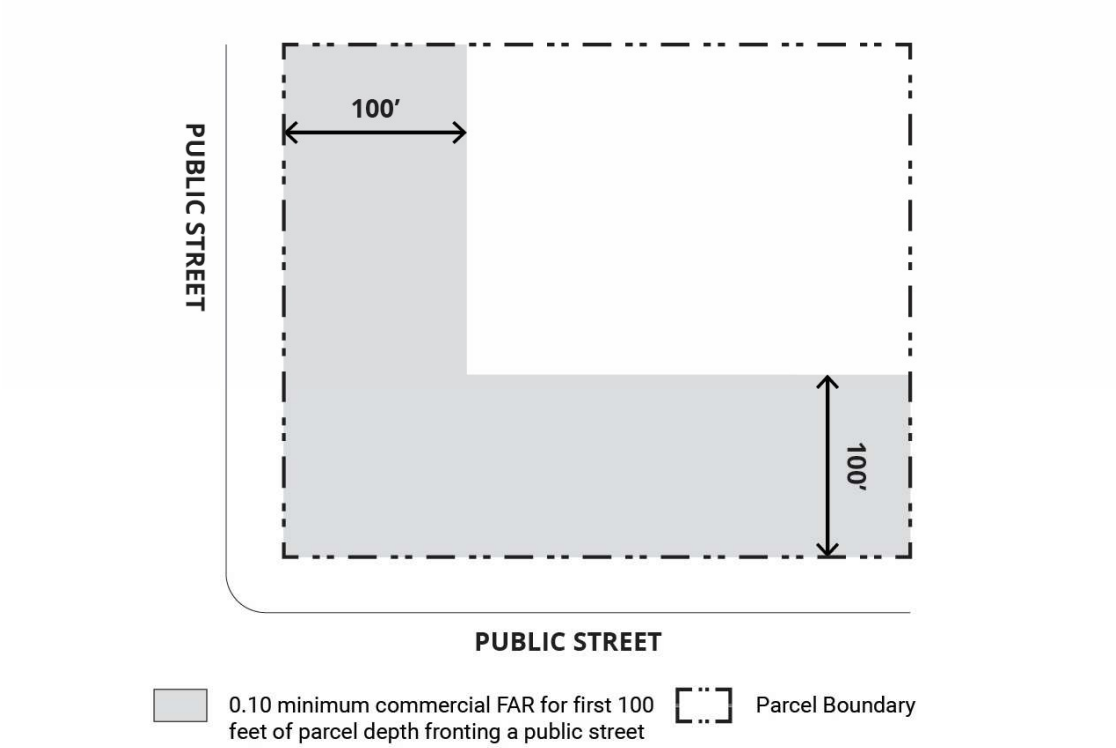

C. Multi-Family Residential Density within Mixed Use zones.

1. MXD Standards.

a. The minimum number of multi-family residential units may be reduced for parcels less than 20,000 square feet.

b. In buildings which have ground floor retail, restaurant, child care, or commercial service uses as allowed in Table 6.02-1, Mixed Use Zone Uses, the square footage of said uses does not contribute to the density limits.

2. MXD2 Standards.

a. The minimum number of multi-family residential units may be reduced for parcels less than 20,000 square feet.

b. Units with four bedrooms shall be counted as 1.5 units when calculating density.

c. In buildings which have ground floor retail, restaurant, child care, or commercial service uses as allowed in Table 6.02-1, Mixed Use Zone Uses, the square footage of said uses does not contribute to the density limits.

3. MXD3 Standards.

a. Units with four bedrooms shall be counted as 1.5 units when calculating density.

b. In buildings which have ground floor retail, restaurant, child care, or commercial service uses as allowed in Table 6.02-1, Mixed Use Zone Uses, the square footage of said uses does not contribute to the density limits.

4. NCMU1, NCMU2, and NCMU3 Standards.

a. Residential units with four bedrooms shall be counted as 1.5 units when calculating density.

5. TC1, TC2, and TC3 standards

a. Residential units with four bedrooms shall be counted as 1.5 units when calculating density.

D. Front and Street-Side Yard Setbacks. The following standards shall apply to front and street-side yard setbacks:

1. All MXD, NCMU, and TC zones.

a. Where a public easement prevents a building from being located at its required minimum or maximum setbacks, the building shall be located as close to the back of said easement as possible.

b. Trellises, canopies and fabric awnings may project up to five (5) into minimum front and street side setback areas and public right of ways, provided they are not less than eight (8) feet above the sidewalk.

c. All buildings shall be oriented towards the street. Primary building entrances shall be oriented toward the street. For buildings located on a corner lots, either street primary building entrances may be oriented to either street.

2. MXD zones:

a. All areas.

i. Balconies, bay windows, porches, stoops, trellises, canopies and awnings may project into the minimum setback areas provided at least sixty percent (60%) of the required setback area is landscaping.

ii. A building's first floor may be recessed from either the maximum front and street side building setback line or the specified build-to-line for the purposes of an arcade, or a small gathering/dining or special entry area.

The arcade shall have a minimum height of (8) feet, a minimum width of eight (8) feet. Other recessed areas may have maximum depth of ten (10) feet, and may not exceed forty percent (40%) of the building's street facing elevation. An entry door area up to nine (9) feet wide may be recessed up to four (4) feet from the back of the sidewalk.

b. Within the Midtown Specific Plan.

i. The Ground Level Commercial Area (as shown on the Specific Plan Land Use Map, Figure 3.1), shall have a build-to-line that is fifteen (15) feet behind the curb. The fifteen (15) feet

between the curb and the building build-to-line shall be developed with sidewalk and street trees.

c. Outside the Midtown Specific Plan.

i. Minimum of eight (8) feet and a maximum of fifteen (15) feet from back of sidewalk. The sidewalk shall be based on either the existing sidewalk or assumed ten (10) foot wide sidewalk, whichever is wider.

3. MXD2 zones:

a. All areas.

i. Balconies, bay windows, porches, stoops, trellises, canopies and awnings may project into the setback areas up to the property line.

ii. A building's first floor may be recessed from the front and street side building setback line for the purposes of an arcade, outdoor dining area, or special entry area.

The arcade shall have a minimum height of (8) feet, and a minimum width of eight (8) feet. Other recessed areas may have a maximum depth of ten (10) feet, and may not exceed twenty percent (20%) of the building's street facing elevation. An entry door area up to nine (9) feet wide may be recessed up to four (4) feet from the front and street-side building setback.

b. Within the Transit Area Specific Plan.

i. Setbacks are defined and illustrated in the street sections of Chapter 5 of the Transit Area Specific Plan.

c. Outside the Transit Area Specific Plan.

i. Minimum eight (8) feet and a maximum of fifteen (15) feet from back of sidewalk.

E. Floor Area Ratio, Non-Residential. In addition to the standards listed in Table 6.04-1 Mixed Use Zone Development Standards for MXD2 and MXD3 zoned properties, the following shall apply:

1. A Floor Area Ratio of two and a half (2.5) for non-residential buildings may be considered for individual sites with a Conditional Use Permit, in accordance with Section 57, Conditional Uses Permitted by Commission, of this Chapter.

2. There are no FAR or density limits for hotels.

3. In buildings which have ground floor retail, restaurant, child care, or commercial service uses as provided for in Table 6.02-1, Mixed Use Zone Uses, the square footage of said uses does not contribute to the FAR calculation.

4. Buildings which include both non-residential uses and residential uses on the upper floors shall be considered "non-residential," and Floor Area Ratio standards shall apply.

F. Landscaping. All required front and street setback areas shall be landscaped or paved to allow for outdoor seating, display or goods, or street furniture.

G. Park and Open Space Requirements for Residential Uses.

1. Areas within Midtown Specific Plan.

a. All residential projects within the Midtown Specific Plan area shall provide park land at a ratio of three and one-half (3½) acres per one thousand (1,000) population. Up to one and one-half (1½) of each three and one-half (3½) total park acres required (43%) may be satisfied by the provision of private recreational areas. The remaining park land requirement must be satisfied by either

dedication of land to the City for public parks and open space, or payment of an in-lieu fee, as set forth in Section 9 (Park Dedication) of the Milpitas Subdivision Ordinance (Title XI, Chapter 1).

b. A minimum of twenty-five percent (25%) of the total site shall be usable open space or recreational facilities. Balconies, porches, or roof decks may be considered usable open space when properly developed for work, play or outdoor living areas.

c. Balconies, porches, or roof decks may be considered usable open space when properly developed for work, play or outdoor living areas. Balconies and porches located above ground level with a minimum dimension of 4½ feet constructed for use by dwelling units shall be exempt from the useable open space dimension standards above and within Section 2 of this Chapter, and may be considered to satisfy usable open space requirements. Each dwelling unit shall be provided with private open space as follows:

i. Balconies and porches (above ground level): minimum sixty (60) square feet; or

ii. Patios (at ground level): minimum one hundred square feet.

2. Areas within Transit Area Specific Plan.

a. All residential projects shall provide park land at a ratio of three and one-half (3.5) acres per one thousand (1,000) population.

i. Two (2) of the required three and one-half (3.5) acres must be satisfied by either dedication of land to the City for public parks and open space, or payment of an in-lieu fee, as set forth in Section 9 (Park Dedication) of the Milpitas Subdivision Ordinance (Title XI, Chapter 1). Land dedication is required if a park is shown on a property on Figure 3-8 of the Transit Area Specific Plan.

ii. Up to one and one-half (1.5) of each three and one-half (3.5) total park acres required (43%) may be satisfied by the provision of private recreational areas. Private open space cannot be shared between separate developments.

b. Each residential project shall provide adequate on-site usable open space or recreational facilities to the approval of the Planning Commission through the Site Development Permit process. Each dwelling unit shall be provided with private open space as follows:

i. Balconies (above ground level): minimum forty (40) square feet; or

ii. Patios and porches (at ground level): minimum fifty (50) square feet.

c. All development projects shall dedicate land for parks if a park is shown on a property on Figure 3-8 of the Transit Area Specific Plan.

d. All commercial development projects shall dedicate and/or improve public trails if a trail is shown on a property on Figure 3-8 of the Transit Area Specific Plan.

e. Twenty percent (20%) of a landscape buffer area may count towards the public park and open space requirements when it includes trails or wide sidewalks connected to the pedestrian and bicycle network.

f. Park Sites: Parks must be bordered by public streets, or public right-of-way such as a trail or railroad right-of-way, on at least three sides.

3. Areas designated NCMU and TC

a. Park Land. All residential projects shall provide park land at a ratio of three and one-half (3.5) acres per one thousand (1,000) population.

i. Park Land must be satisfied by either dedication of land to the City for public parks and open space, or payment of an in-lieu fee, as set forth in Section 9 (Park Dedication) of the Milpitas Subdivision Ordinance (Title XI, Chapter 1).

b. Publicly Accessible Parks and Open Spaces. All mixed use or residential only projects on sites between 3 acres and 5 acres shall dedicate 5% of total site area to publicly accessible parks and open space. All mixed use or residential only projects greater than 5 acres shall dedicate 10% of total site area to publicly accessible parks and open space. Publicly accessible parks, plazas, and open spaces provided to meet the requirement below may be counted towards the park land requirement above.

c. Usable Open Space. A minimum of twenty-five percent (25%) of the total site shall be usable open space or recreational facilities. Usable open space may be provided as Common Open Space or Private Open Space.

5. Areas outside Specific Plans.

a. All residential projects outside a Specific Plan area shall comply with the park land dedication provisions provided in Section 9.06 (Amount of Park Land to be Dedicated) of the Milpitas Subdivision Ordinance.

(Ord. No. 38.828, §§ 2, 3, 2/21/17; Ord. No. 38.803, § 7, 4/17/12; Ord. No. 38.785, § 5, 4/7/09; Ord. 38.777 (6) (part), 6/17/08)

XI-10-6.05 Reserved

Editor's note(s)—Ord. No. 38.785, § 6, adopted April 7, 2009, amended the Code by repealing former § XI-10-6.05 in its entirety. Former § XI-10-6.05 pertained to off-street vehicle and bicycle parking, and derived from Ord. 38.777, adopted June 17, 2008.

XI-10-6.06 Special Development Standards

A. Utilities.

1. Utilities shall be placed in underground or subsurface conduits.

2. All mechanical equipment, ground transformers and meters shall be located and screened to minimize visual impacts.

3. Rooftop mechanical equipment shall be concealed from street level views through roof designs that area architecturally integrated with the building, such as equipment wells and parapets.

4. Public utility distribution meters, vaults and similar installations shall be consolidated in a single area whenever possible and located away from highly visible areas such as street corners and public open spaces.

5. Backflow preventors shall be located within landscaped setback areas and painted black or dark green to minimize visual impact. Where no landscaped setback areas exist the backflow preventors shall be incorporated into the front of the building to minimize visual obtrusiveness.

6. Refuse and recycling containers shall not be visible from a public or private street. Such containers shall be stored either within the parking facility of the building or within a vehicular accessway with screening designed to meet the requirements of this section.

7. Trash enclosure walls shall incorporate building materials and colors that match the architecture of the building, and be well landscaped.

8. All telecommunications antennas shall be building facade or roof mounted and screened appropriately.

9. On Main Street only telecommunication facilities that are disguised to appear as a part of the building architecture (i.e. "stealth" antennas) may be used.

B. Outdoor music

1. Outdoor music as an accessory use in conjunction with a restaurant or bar in the MXD, MXD2, MXD3, NCMU, and TC zones shall be permitted for the entertainment and enjoyment of customers at the restaurant or bar during regular operating hours. Outdoor music as an accessory use shall be limited to the hours of 9:00 am to 11:00 pm.

2. Recorded background music may be permitted outdoors on public sidewalks and other public areas subject to the standards of this Chapter and Title V – Public Health, Safety and Welfare, Chapter 213 – Noise Abatement.

3. Noise levels for outdoor music, when permitted as an accessory use to a restaurant or bar, shall not exceed a maximum range of 70 to 90 decibels (dB). See also Title V – Public Health, Safety and Welfare, Subsections V-213-2 and V-213-3, for additional regulations.

4. Larger outdoor music events, both live and recorded music, that are intended for the entertainment and enjoyment of the general public shall not be considered accessory uses and shall require a Special Event Permit pursuant to Section 15, Special Events and Activities, of this Chapter.

(Ord. No. 38.803, § 7, 4/17/12; Ord. 38.777 (8) (part), 6/17/08)

XI-10-6.07 Exceptions to Standards

1. Exceptions to all but the use, floor area ratio, density, and park land requirement regulations of this Section may be approved by the Planning Commission through approval of a Conditional Use Permit in accordance with the requirements of Section 57, Conditional Uses Permitted by Commission, of this Chapter.

2. In addition to the required findings under Chapter 57, the Planning Commission must be able to make the following two additional findings for such exceptions:

   a. The exceptions meet the design intent identified within the Zoning District and/or Specific Plan and do not detract from the overall architectural, landscaping and site planning integrity of the proposed development.

   b. The exceptions allow for a public benefit not otherwise obtainable through the strict application of the specified standard.

(Ord. No. 38.803, § 7, 4/17/12; Ord. 38.777 (8) (part), 6/17/08)

XI-10-6.08 Conformance with Specific Plans

Properties located within Specific Plans shall conform to the underlying Specific Plan in accordance with Section XI-10-11.06, Conformance with Specific Plans, of this Chapter.

(Ord. No. 38.803, § 7, 4/17/12; Ord. No. 38.795, § 23, 4/6/10)

Parking

Parking Summary: Requirements are located in Section 53.

1. Areas designated NCMU and TC
    a. The minimum number of parking spaces required for residential uses shall be 1 space per unit.
    b. The minimum number of parking spaces required for commercial uses shall be 1 space per 300 sq.ft. of commercial use.

For other parking-related standards, refer to Section 53, Off Street Parking Regulations, of this Chapter.

TABLE IS EXCERPT FROM SECTION 53

Residential use	
Studio	1 covered per unit
1 bedroom	1 covered per unit
2—3 bedrooms	1 covered per unit
4 or more bedrooms	1 per unit, plus 1 additional space for each additional bedroom (at least two covered). [4]
Guest parking for residential	
Projects with Parking structures	10% of the total required, may be uncovered
Projects with Private garages	10% of the total required, may be uncovered
Bicycle parking	5% of total required
Commercial use	
Ground Floor Retail	1 per 300 sq. ft.
Office	1 per 300 sq. ft.
Restaurants	1 per 300 sq. ft.
Short-Term Rentals	1 per unit

	Other uses	Refer to specific uses within this table
	Bicycle parking	5% of total auto spaces required
Mobile Homes		Refer to Section 13.07, Mobile Homes
Senior Housing		0.5 per unit plus 2 per manager's unit
Single Room Occupancy (SRO)		none required

GP Definitions

NCMU

Current GP Designation:

The Neighborhood Commercial Mixed-Use (NCMU) designation is intended to accommodate a mix of commercial and residential uses with an emphasis on commercial activity as the primary use, and residential uses, hotel, and office development allowed on a limited basis. The NCMU designation encourages active neighborhood serving uses at the ground level, including grocery stores, specialty retail, restaurants, plazas, or walk-in personal services such as banks and salons at FARs up to 0.75.

This designation also provides opportunities for vertical or horizontal mixed-use residential development to provide for area vibrancy and to encourage the redevelopment of aging commercial centers by allowing Multifamily dwelling units at a rate of 1 unit per 1,500 square feet of new or rehabilitated neighborhood-serving retail and commercial services. The City Council may consider the approval of residential-only projects in the NCMU land use designation, provided the project is 100% affordable to the “low” and “very low” income categories, in order to increase the stock of affordable housing in Milpitas.

Projects with a residential component are subject to additional policy direction (Policy LU 6-1) to ensure that NCMU areas continue to primarily serve surrounding neighborhoods with commercial services.

Proposed GP Designation

The Neighborhood Commercial Mixed-Use (NCMU) designation is intended to accommodate a vertical and horizontal mix of commercial and residential uses with an emphasis on neighborhood commercial activity. Residential uses, hotel, and office development are allowed on upper floors. The NCMU designation encourages active neighborhood-serving uses at the ground level, including grocery stores, specialty retail, restaurants, plazas, or walk-in personal services such as banks and salons at FARs up to 0.50.

This designation provides opportunities for vertical and horizontal mixed-use residential development to provide for area vibrancy and to encourage the redevelopment of aging commercial centers by allowing residential developments up to 60 dwelling units per acre for mixed-use and residential only projects. Redevelopment of larger neighborhood commercial centers shall provide a minimum of 0.20 FAR of new or rehabilitated neighborhood-serving retail and commercial services. Parcels fronting major streets shall provide a minimum 0.10 FAR of neighborhood-serving retail and commercial services for the first 100 feet of parcel frontage depth. The residential only developments do not require any minimum non-residential FAR.

Change the following Policy:

LU 6-1 Ensure new development in Neighborhood Commercial Mixed Use (NCMU) areas includes adequate commercial components to retain commercial uses as the dominant ground floor use type, and that the

redevelopment of aging centers results in maintain viable commercial space to meet neighborhood's daily service needs.

Town Center GP Designation

Existing GP Designation

This designation provides for a variety of commercial, professional, civic, restaurants, hotels, residential, and entertainment uses. Projects may consist of a wholly non-residential development, or a mixed use residential project that integrates residential and nonresidential uses vertically or horizontally. Residential-only projects are not permitted. Residential developments up to 40 units per acres may be permitted within the Town Center as part of a mixed use development project to increase economic support to the commercial uses. Developers wanting to maximize the residential component of the parcel are required to provide a minimum FAR of 0.35 for the non-residential component. Sites developed with a mix of uses, or non-residential uses, must adhere to a FAR maximum of up to 0.85.

Proposed GP Designation

The Town Center (TWC) designation provides for a variety of commercial, professional, civic, restaurants, hotels, residential, and entertainment uses. Projects may consist of a wholly non-residential development, or a mixed use residential project that integrates residential and nonresidential uses vertically or horizontal. Residential developments up to 65 units per acres are permitted within the Town Center to increase economic support to the commercial uses. To maintain the importance of the Town Center area as a center for commercial, professional and civic uses, a minimum of 0.35 FAR of non-residential uses is required for redevelopment of major shopping centers into mixed-use projects and a minimum of 0.10 FAR of non-residential ground floor uses is required along major streets. All non-residential development, except for hotel uses, must adhere to a FAR maximum of up to 0.85. Where permitted, residential only developments do not require any minimum non-residential FAR.

CITY OF MILPITAS
AGENDA REPORT
(AR)

Item Title:	**Receive a Presentation on the Draft Public Art Master Plan (Staff Contact: Renee Lorentzen, Recreation and Community Services Director, 408-586-3409)**
Category:	Community Services and Sustainable Infrastructure
Meeting Date:	4/15/2025
Recommendation:	Receive a presentation on the Draft Public Art Master Plan and provide feedback on Plan key strategies to staff.

BACKGROUND:

The City of Milpitas Public Art Program has been part of the City's broader effort to foster cultural expression and enrich the community's environment. Milpitas formally established its Public Art Program in the early 2000s and incorporated art into public spaces, such as parks, libraries, and City buildings via public projects.

To ensure the program's continued success, the City of Milpitas established the Milpitas Arts Commission in 2003. The Commission is responsible for reviewing and recommending public art installations and advising on arts-related policies. In 2014, the City of Milpitas adopted a Public Art Requirement for Private Development Ordinance, establishing a one-half of one percent for public art policy for private development projects.

In FY 2022-23, City Council approved funding for a Public Art Master Plan as part of the Public Art Capital Improvement Program (CIP) project and approved the Arts Commission annual work plan, which included working with staff on developing a formal Public Art Master Plan, including an assessment of the existing collection, maintenance recommendations, and public art policies.

In April 2024, following a formal Request for Proposals, the City engaged the services of consultant Designing Local to develop a Public Art Master Plan for Milpitas tailored to the community's vision and incorporating best practices in the field.

Designing Local conducted extensive community outreach to seek public impressions about the current perception of public art in Milpitas and what the community hopes to see going forward. Additionally, it contracted ACT Art Conservation to make a condition assessment of 28 pieces in the current collection and with the Roth Art Group to provide an appraisal report of the replacement value of the current pieces. This information informs Designing Local's Master Plan recommendations.

Community Engagement

Community engagement began in June 2024 and was conducted via city-wide surveys, stakeholder interviews, and onsite community engagement with interactive community art-making activities offered in conjunction with the onsite engagements. Comprehensive surveys were distributed in English, Spanish, Simplified Chinese and Vietnamese, with more than 150 people responding. One-on-one stakeholder conversations were conducted with 25 people including commissioners, artists, and city staff. On-site engagement was conducted at the Milpitas Library, Barbara Lee Senior Center, Milpitas Sports Center, Milpitas Teen Center, and Milpitas Community Center. The first series of on-site engagements occurred in September 2024 and included community artmaking at the Lantern Festival.

The second series of engagements to review the draft master plan recommendations began in February 2025. In-person community meetings to review the draft plan along with artmaking at various locations such as the

Community Center and Milpitas José Esteves Library, were held. Artwork created through these engagements was unveiled at the March 2025 Holi Festival.

Additional feedback to the draft master plan was also provided through an online survey.

Community Feedback

Respondents see Milpitas as a culturally-expansive, family-oriented City with a genuine small-town feel. They seek artwork that is vibrant, inclusive, meaningful, uplifting and invites curiosity. Survey and stakeholder responses to the current collection revealed that the concept of public art is generally misunderstood, for example, confusing art enhancements with public art projects. Additionally, respondents felt the current collection lacks continuity and the pieces are not representative of the diverse community. The types of art that were most desired are functional art, murals and sculptures.

Feedback received from the plan review were very positive, with members of the public excited about potential themes and locations, and pleased the City is making efforts to create a formal Public Art Master Plan.

ANALYSIS:

The draft Public Art Master Plan (Attachment A) is the guiding document that establishes policy guidelines to ensure a consistent decision-making process related to the acceptance, placement, display, and long-term maintenance of public art funded in full or in part by the City and/or public, and installed on City-owned property. The draft document includes assessment of the existing public art collection including valuation, recommendations for maintenance and deaccession, plan implementation, and funding strategies. The following are the recommended key strategies for implementation to provide a high-quality public art program for the Milpitas community.

Staff is seeking feedback from the City Council on these key strategies.

Vision for Public Art

Based on the community feedback, the draft Public Art Master Plan includes a vision statement for the program:

Milpitas will be a city where public art is a dynamic and inclusive force that fosters belonging among all, reflects Milpitas' diverse population, and deepens the quality of life for all residents.

Strategic Plan Recommendations

Strategies to achieve this vision are:

1. Make this collection **community-centric, inclusive and accessible**. This includes bilingual interpretive material, QR codes linking to additional information, and a Public Art Field Guide.
2. Operate within the **regional context** of larger cities San Francisco and San José, with Milpitas' emphasizing its community pride through public art on a local scale.
3. **Strategically place artwork** in high traffic areas and gathering places.
4. **Collaborate** with other city departments, the community, local businesses, schools, and cultural organizations.
5. **Balance tradition and innovation,** using different mediums to engage a wider audience and promote creative wellness in a STEM-centric community.
6. Establish **sustainable funding** mechanisms.

Potential Project Locations

Examples of strategic types of projects and/or installation locations where new artwork could be impactful are:

1. Engraved or inlaid paths (i.e. sidewalks, streets)
2. Expanded Utility Box Program
3. Functional art and social spaces
4. Hetch-Hetchy Trail Interventions
5. Hidden Lake Park Staircase Mural
6. Hillside Intervention
7. Media projects along Jacklin, Abel and North Milpitas.
8. Placemaking Public Art at key intersections
9. Rotating 2-D art on digital billboards
10. Skatepark Public Art Enhancement
11. Utility pole activations

Suggested Themes

Use of these themes, which reference Milpitas' past but recontextualize ideas for newer residents, could help make art more inclusive:

1. Always in Motion
2. A Common Language
3. The Gathering House
4. Land of Sunshine, Fruit, and Flowers

Strategic Recommendations

Changes that could make the Public Art Program operate more efficiently and in line with national best practices are:

1. Policy Updates including a **Collection Management Policy, Acquisition Policy** and formalize duties of the **Public Art Administrator**.
2. Audit of collection and appropriate maintenance, including considerations **of deaccession, on-call maintenance, emergency plan, and a five-year maintenance plan**.
3. Expand funding, including increase to 1.5% for art and define which projects are eligible.
4. Relationship building, including partnerships with **VTA, BART, Caltrans**, and Milpitas' own Office of **Economic Development** and **Planning** Department, explore **mural easements** with local businesses, consider **matching grants for murals** on private property, **collaborate** with local businesses on private installations, providing **courtesy reviews** of installation proposals.
5. Increase accessibility, including installing **consistent signage that is bilingual and has a QR code link** for more information, publish a **field guide** with new editions every 5-10 years, and add **online public art map**.

FISCAL IMPACT:

There is no fiscal impact associated with receiving this presentation. After the adoption of the Public Art Master Plan, funding will be required to implement recommendations of which the Public Art Fund will be the primary source of funding. The current balance in the Public Art Fund is $998,702. The current balance of the Public Art CIP project is $558,888.

CALIFORNIA ENVIRONMENTAL QUALITY ACT (CEQA):

This action is continuing administrative activity related to overall policy and procedure making and is not a project pursuant to Cal. Code Regs., tit. 14, § 15378. The project has no potential for resulting in either a direct

physical change in the environment, or reasonably foreseeable indirect physical change in the environment and is not a project pursuant to Pub. Resources Code, § 21065 and Cal. Code Regs., tit. 14, § 15378. The project entails the operation and minor alterations of existing public structures, facilities, or topographical features, involving negligible or no expansion of existing or former use and is exempt from CEQA pursuant to Cal. Code Regs., tit. 14, § 15301.

RECOMMENDATION:

Receive a presentation on the Draft Public Art Master Plan and provide feedback on Plan key strategies to staff.

ATTACHMENT(S):
(a) Draft Public Art Master Plan

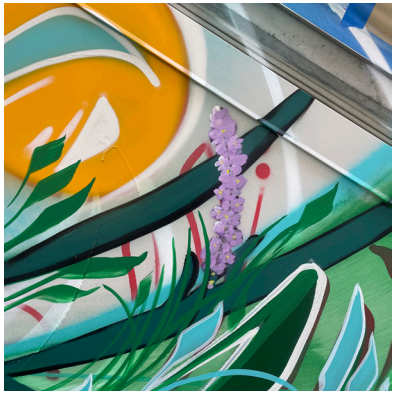

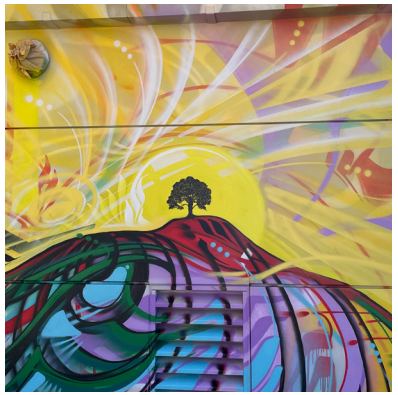

MILPITAS
PUBLIC ART MASTER PLAN

CONTENTS

INTRODUCTION.....4

Executive Summary 6
Why Explore a Public Art Plan Now? 7

COMMUNITY IDENTITY+ BACKGROUND.....8

Legacy + History of the Program 10
Current Collection, Placement + Context 11
Engagement + Outreach Summary 13
Survey Graphics 14
Stakeholder Report 20

PUBLIC ART VISION + GUIDING PRINCIPLES: AN EVERYONE-CENTERED APPROACH.....20

Vision for the Public Art Master Plan 25
Public Art Guiding Principles 26
Public Art Typologies 28

MILPITAS-SPECIFIC LOCATIONS + THEMES FOR PUBLIC ART.....38

Locations for Public Art Placement 40
Themes For Public Art 62

STRATEGIC RECOMMENDATIONS.....68

Program + Administrative Recommendations 70
Summary of Strategic Recommendations 72

APPENDIX.....74

ACT Conservation Collection Assessment
Roth Art Group Collection Appraisal Report
Percent for Art Case Studies
Percent for Art Ordinance Recommended Draft Updates
Public Art Policy Recommended Draft Updates

CHAPTER ONE

INTRODUCTION

01

EXECUTIVE SUMMARY
WHY EXPLORE A PUBLIC ART PLAN NOW?

Vickie Jo Sowell,
Legends of Milpitas

EXECUTIVE SUMMARY

Joe Bologna, Patricia Vader,
Kicker Kid

PLANNING PROCESS

The Milpitas Public Art Master Plan is informed by community engagement, stakeholder feedback, and national best practices.

Chapter 1 provides an overview of the Plan, and offers a vision for public art in Milpitas over the next decade. This chapter also addresses how the Plan connects with existing City initiatives to support growth, livability, and existing resources.

Chapter 2 outlines the City's current public art collection and program history through a present-day lens. This Plan's stakeholder report captures data, feedback, and community input about the current collection, as well as opportunities for its growth. Taking into account everything we heard from the community.

Chapter 3 offers a comprehensive suite of public art projects and placemaking ideas that align with this Plan's vision statement. In addition to specific project recommendations, this chapter also provides an overview of public art typologies, which are designed to introduce public art concepts to audiences (including developers or other prospective partners) who may be less familiar with the benefits and possibilities of public art.

Finally, Chapter 4 evaluates current administrative practices, and offers recommendations to maximize the facilitation and care of public art in Milpitas. General recommendations for the public art program and the role of public art in Milpitas are also presented in this chapter.

WHY EXPLORE A PUBLIC ART PLAN NOW?

Milpitas offers its over 80,000 residents a high quality of life through its community facilities, access to multiple public transit systems, diverse population, proximity to San Francisco, and picturesque location along the Diablo Range. As the City anticipates new development and growth, the Milpitas 2040 General Plan seeks to maximize livability while ensuring fiscal sustainability. Milpitas' population increased nearly 13% between 2012 and 2022, correlating with the rapid rise of the tech industry, yet many residents voiced that the City has retained a small-town feel, largely attributed to its close-knit neighborhoods, ample parks, and amenities.

Public art reveals a community's identity, in addition to creating a sense of place. Survey respondents and stakeholders repeatedly described Milpitas as a culturally-expansive, family-oriented City with a strong park system and proximity to Bay Area destinations. With a largely tech-driven workforce in the heart of Silicon Valley, Milpitas has attracted residents from across the world, resulting in a vibrant, highly diverse community, with a genuine small-town feel. This Public Art Master Plan aims to identify strategies for public art placement, typologies, and themes that enhance Milpitas' livability and quality of life, while supporting the City's goals for continued growth.

As it looks to the future, Milpitas is also in a distinct moment in its history. The City's population has become increasingly diverse with each generation, and will continue to embrace neighbors from around the world. Public art is not only a powerful mechanism for bridging the past and the future, but also it is an essential part of connecting residents with each other across language or cultural divides. Through its beloved parks, civic amenities, and other public spaces, Milpitas' public art will convey that all are welcome—and belong.

James Dinh,
Circle of Time

CHAPTER TWO

COMMUNITY IDENTITY + BACKGROUND

LEGACY + HISTORY OF THE PROGRAM
CURRENT COLLECTION, PLACEMENT, AND CONTEXT
ENGAGEMENT + OUTREACH SUMMARY
SURVEY GRAPHICS
STAKEHOLDER REPORT

02

Adrian Susnea-Litman,
Birds of Paradise

LEGACY + HISTORY OF THE PROGRAM

Milpitas has a long history with public art and reflects the community's long-standing desire for arts to be integrated into daily life.

Public art in Milpitas emerged from a community-led, grant-funded "Art in Your Park" project to enliven the City's neighborhood parks and represent the community. Project ideas and artwork selections were the result of resident input, and artworks reflected individual neighborhoods. Two decades later, Milpitas' beloved public spaces feature 28 artworks ranging from sculpture to functional mosaic benches.

As the program has evolved, the City has implemented artworks around Milpitas and in its civic facilities. In 2014, the City's public art ordinance was adopted, which formalized the program, the Arts Commission, and the City's one-half of one percent for art policy.

"This mural commemorates and celebrates members of our community who had a significant contribution to the development of the City of Milpitas."
Adrian Susnea Litman, *Thriving Legacy*

CURRENT COLLECTION, PLACEMENT + CONTEXT

Milpitas' current collection comprises 28 objects in an impressive range of styles, including traditional bronzes, contemporary murals, and kinetic sculpture. The collection is primarily focused on the City's history, and three-dimensional sculpture is the most represented public art typology in the collection.

As part of the Public Art Master Plan, the City has commissioned its first collection assessment, performed and developed by ACT Art Conservation. This assessment provides detailed information about each object's overall condition, outlines any recommended maintenance treatments, and proposes strategies for long-term object care.

Scott Donahue,
Watching You

The current collection has provided a foundation for public art in Milpitas, and many stakeholders expressed gratitude for the neighborhood-centered approach to the growth of its collection. The program's future should consider the following goals:

1. Clarifying public art approaches, typologies, and strategies:

Among community members, there is a desire to clarify the differences between public art, decoration, and artistic amenities. While public art can manifest in a number of ways throughout any community, setting a consistent tone for the display of the collection can distinguish Milpitas' public art collection from other features of public spaces.

2. Widening its community representation:

Public Art in Milpitas should embrace the community's many cultures and backgrounds. Many stakeholders expressed a desire for the City's public art collection to expand its storytelling, representation, and engagement with its diverse community.

Thematically, the current collection addresses local histories, community art making, and celebrates Milpitas' parks and green spaces. The public art program's origins emphasize the collection's placement and context, and the community has embraced the presence of art in these public spaces for decades. Taking this background into account, a key recommendation of the plan is to strategically place future art in locations that will yield positive, frequent engagement with the public, while also identifying non-traditional opportunities for public art placement.

ENGAGEMENT + OUTREACH SUMMARY

Community Engagement for this Plan occurred between July 2024 and March 2025. During this time, the project team...

- **Created and distributed public art surveys in English, Spanish, Simplified Chinese, and Vietnamese**
- **Gathered more than 150 survey responses**
- **Facilitated 25 one-on-one stakeholder conversations**
- **Conducted on-site community engagement at the Milpitas Library, Barbara Lee Senior Center, Milpitas Sports Center, and Milpitas Teen Center**
- **Managed two interactive community art-making activities: the first occurred in September 2024 during the Lantern Festival and was facilitated by artist Edi Hsu, and the second coincided with the March 2025 Holi Festival and was led by Saranya Chandrasekaran.**

Individual conversations took place with City staff, regional arts leaders, current and former Arts Commission members, local business owners, and elected officials.

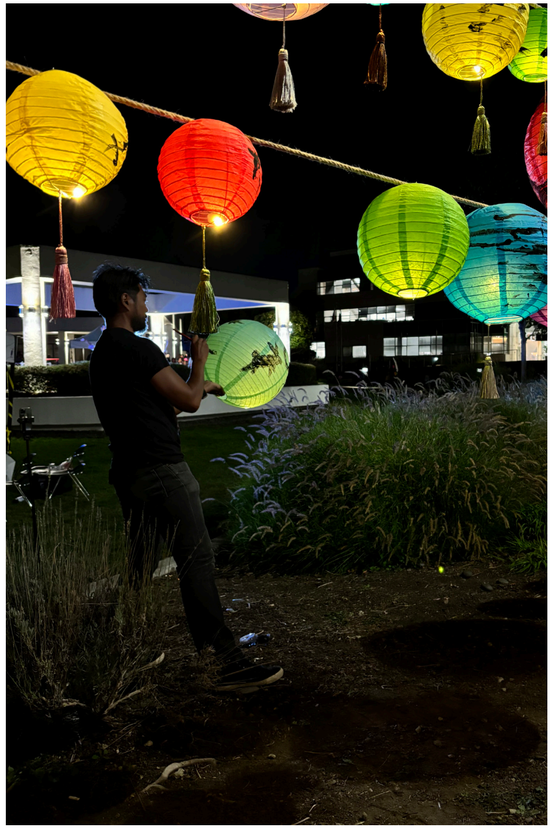

SHARE
YOUR VISION
FOR PUBLIC ART IN MILPITAS
MILPITAS
PUBLIC ART
MASTER PLAN
Take the survey!

SURVEY GRAPHICS

WHAT IS YOUR RELATIONSHIP TO MILPITAS?

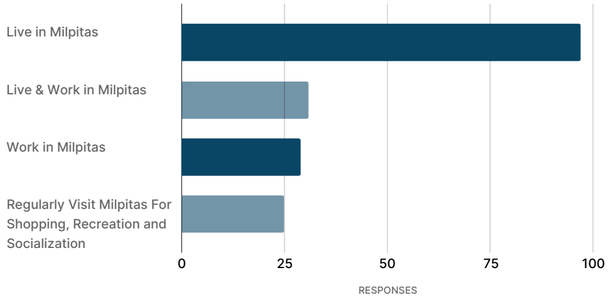

WHERE DO PEOPLE GATHER IN MILPITAS?

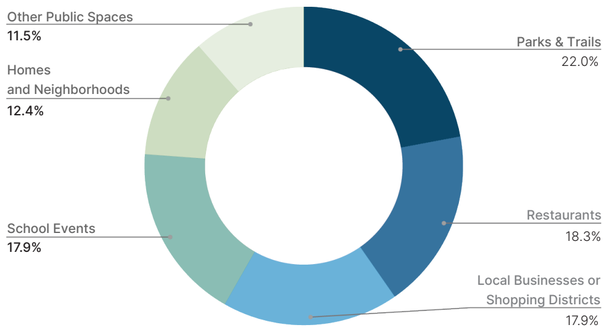

WHERE DO YOU RECALL SEEING PUBLIC ART IN MILPITAS?

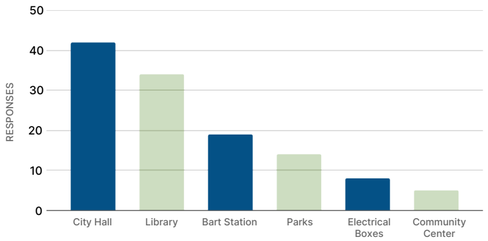

IF THERE WAS MORE PUBLIC ART IN MILPITAS, WOULD MILPITAS BE A BETTER PLACE TO LIVE?

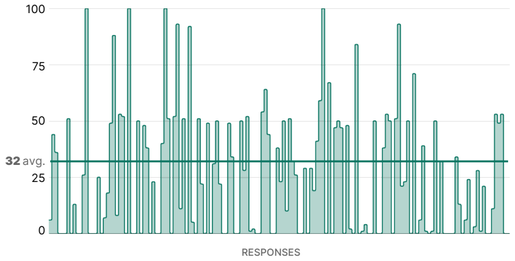

HOW WOULD YOU RATE THE OVERALL QUALITY OF PUBLIC ART IN MILPITAS?

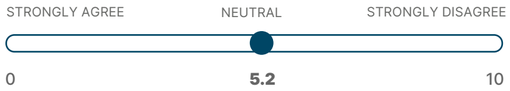

WHAT WORDS OR PHRASES WOULD YOU USE TO DESCRIBE MILPITAS?

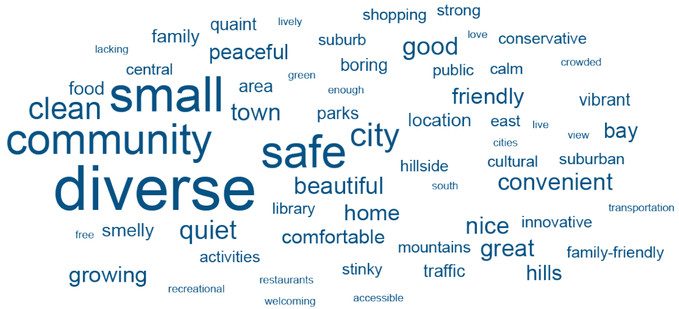

WHAT OTHER CITIES HAVE GOOD PUBLIC ART, IN YOUR OPINION?

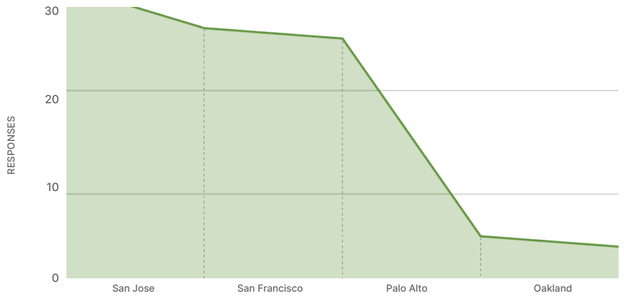

WHAT IS YOUR FAVORITE PUBLIC ART IN MILPITAS?

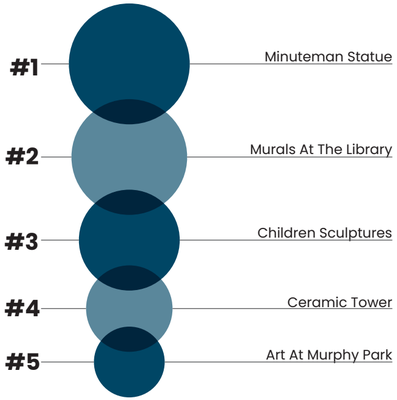

WHAT IMAGE COMES TO MIND WHEN YOU THINK ABOUT PUBLIC ART IN MILPITAS?

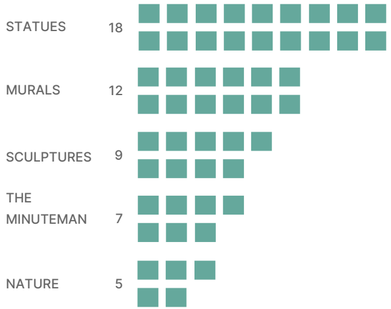

WHAT TYPES OF PUBLIC ART WOULD YOU LIKE TO SEE MORE OF IN MILPITAS?

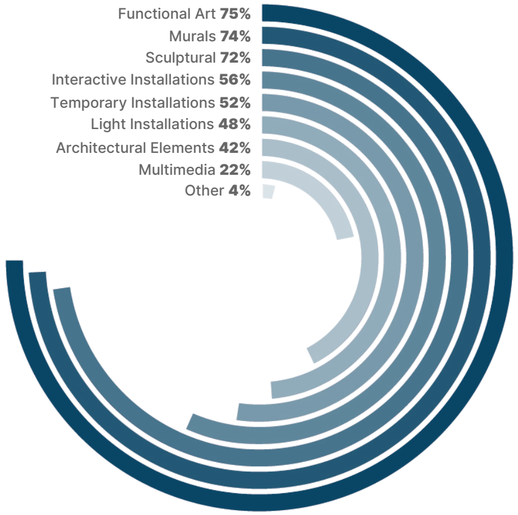

DO YOU FEEL LIKE EXISTING PUBLIC ART IN MILPITAS REFLECTS YOUR VALUES?

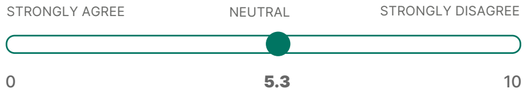

DO YOU FEEL LIKE EXISTING PUBLIC ART IN MILPITAS REFLECTS YOUR IDENTITIES?

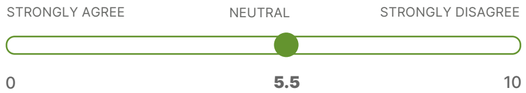

DO YOU FEEL LIKE PUBLIC ART IN MILPITAS REFLECTS THE MILPITAS COMMUNITY?

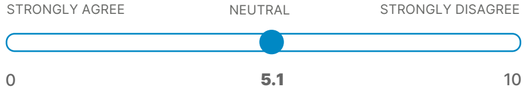

PUBLIC ART IN MILPITAS SHOULD FEEL:

WHERE WOULD YOU LIKE TO SEE MORE PUBLIC ART IN MILPITAS?

#1 **PARKS**

#2 **MIDTOWN AREA**

#3 **GATEWAYS**

#4 **MILPITAS METRO AREA**

#5 **GOVERNMENT BUILDINGS**

#6 **MAJOR INTERSECTIONS**

#7 **MIXED-USE DEVELOPMENTS**

WHAT ARE SOME CHARACTERISTICS OF A PLACE IN MILPITAS THAT MAKE YOU FEEL A SENSE OF BELONGING?

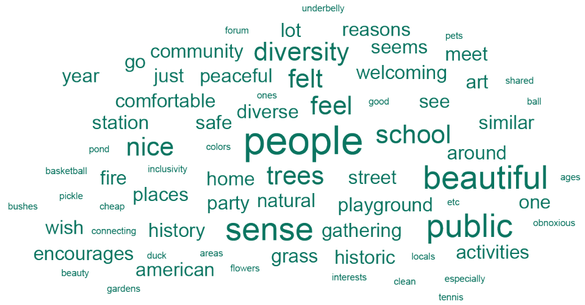

WHAT IMPACT SHOULD PUBLIC ART HAVE IN MILPITAS?

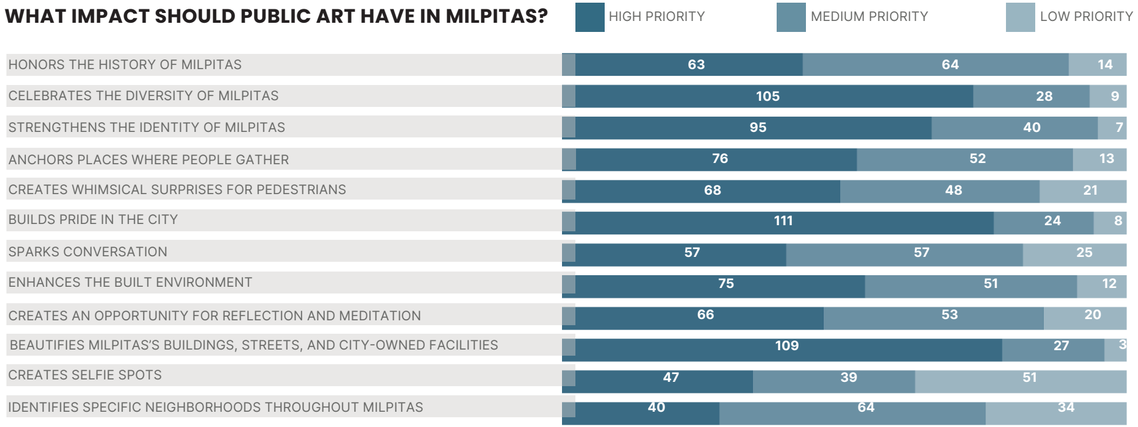

STAKEHOLDER REPORT

MILPITAS PUBLIC ART MASTER PLAN

The following questions were asked to each stakeholder:

1. What is your relationship with/ connection to public art in Milpitas?
2. Do you feel that the current public art landscape and/or collection is reflective of the identity of Milpitas? Why or why not?
3. What are the most successful examples of public art in Milpitas and why?
4. What are the least successful examples of public art in Milpitas and why?
5. What is your vision for public art in Milpitas and its impact?
6. Where would you like to see more public art in Milpitas?

Following is a summary of feedback heard during individual interviews. The information is divided into small sections to provide a snapshot of themes from the stakeholders.

WHAT IS THE CURRENT PERCEPTION OF PUBLIC ART IN MILPITAS?

- Public Art is misunderstood: Among community members, there are misconceptions about the differences between public art, decoration, and artistic amenities.
- Administrative hurdles: Processes for public art are complex and slow-moving, leading to fewer annual opportunities for project implementation.
- Unclear vision: Varying priorities and shifting program goals have made it difficult to unite the collection's identity.
- Not representative of Milpitas' diverse community: Public Art in Milpitas should embrace the community's many cultures and backgrounds, but according to survey results, half of the community does not feel that the collection fosters belonging

MaryAnn. Baker, *Happy Hats Bench*

WHAT IS THE IDENTITY OF MILPITAS?

Survey respondents and stakeholders repeatedly described Milpitas as a culturally-expansive, family-oriented City with a strong park system and proximity to Bay Area destinations. With a largely tech-driven workforce in the heart of Silicon Valley, Milpitas has attracted residents from across the world, resulting in a vibrant, highly diverse community, with a genuine small-town feel.

WHAT TRAITS DOES MILPITAS WANT TO SEE IN FUTURE PUBLIC ART?

- Visually vibrant: Colorful, inspiring, fun
- Curious: Interactive, stimulating, thought-provoking, transformative
- Inclusive: Diverse, representative of the community, welcoming to all
- Meaningful: Historic, contemplative, tells a story
- Positive: Happy, joyful, uplifting, peaceful

VISION STATEMENT FOR THE MILPITAS PUBLIC ART MASTER PLAN

Milpitas will be a city where public art is a dynamic and inclusive force that fosters belonging among all, reflects Milpitas' diverse population, and deepens the quality of life for all residents.

STRATEGIC RECOMMENDATIONS

The following recommendations in the Public Art Master Plan will offer strategies to support the Vision:

- Community-centric, Inclusive, and Accessible: Public art should resonate with the diverse community, especially younger demographics. The collection should be more accessible, which can be addressed through bilingual interpretive materials, contextualizing QR codes, and a Public Art Field Guide. The process of creating public art should involve residents in decision-making, from concept to installation.
- Regional context: Among larger, regional cities (such as San Francisco and San Jose), Milpitas' public art and cultural resources are well-sized to meet needs of the community, which supports a continued desire to emphasize community pride through Milpitas' public art on a local scale.
- Strategic placement: Art should be strategically placed to maximize its impact, such as in high-traffic areas and community gathering spaces to strengthen the bond between the community and public art.
- Collaboration: A collaborative approach between City Departments (including Planning, Recreation & Community Services, and Economic Development) and the Community (developers, artists, neighborhood groups, etc.) is crucial for successful public art initiatives. The Public Art Program should also seek collaboration with businesses, schools, and cultural organizations to expand the reach of public art.
- Balancing Tradition and Innovation: Milpitas should strike a meaningful balance between traditional forms of expression and innovative mediums to engage a wider audience and stay relevant in Silicon Valley. The City is poised to be an example of how public art can support creative wellness within a STEM-centric community.
- Sustainable funding mechanisms: While the existing Percent for Art ordinance provides substantial funding support for public art acquisition in Milpitas, stakeholders expressed a desire for clear forms of support for long-term collection care and maintenance. The City should consider increasing the half percent developer fee to one percent, or greater.

CHAPTER THREE

PUBLIC ART VISION + GUIDING PRINCIPLES: AN EVERYONE-CENTERED APPROACH

VISION FOR THE PUBLIC ART MASTER PLAN
PUBLIC ART GUIDING PRINCIPLES
PUBLIC ART TYPOLOGIES

03

Cork Marcheschi,
Fertile Ground

Milpitas will be a city where public art is a dynamic and inclusive force that fosters belonging among all, reflects Milpitas' diverse population, and deepens the quality of life for all residents.

PUBLIC ART GUIDING PRINCIPLES

Shannon More-Jervis, Marcia Smith,
Hand in Hand Around the Park

Building on the vision for Public Art in Milpitas, a set of guiding principles for future public art projects and programs will ensure that community feedback from the Public Art Master Plan process is at the heart of decision-making. The following principles are synthesized from community and survey input, and illuminate the traits that the public would like to see in future public art:

Visually Vibrant

Colorful, inspiring, fun

Sparks Curiosity

Interactive, stimulating, thought-provoking, transformative

Inclusive

Diverse, representative of the community, welcoming to all

Meaningful

Historic, contemplative, tells a story

Positive

Happy, joyful, uplifting, peaceful

PUBLIC ART TYPOLOGIES

Public art projects can have a range of positive, impactful outcomes in public spaces and communities. This section outlines some different types of public art interventions, engaging opportunities for public involvement in art, and strategies to select public art sites.

Carla Moss,
Little Alviso Water Tower

PUBLIC ART MEDIA

Matthew Mazzotta, *Cloud House,*
Springfield, Missouri (2016)

Patrick Dougherty, *Summer Palace*
Morris Arboretum, Philadelphia, PA (2009)

SCULPTURES

Sculptures are three-dimensional original artworks that can be made of any material that offers structural stability and durability. Sculptures are scaled to their surroundings and typically do not move from the location in which they are installed. Whether contemporary, whimsical, traditional or something more, sculptures are often the focal points of civic art. Sculptures may commemorate and celebrate our history, express civic pride, or be established as culturally-defining showpieces for the town.

Sculptures can take on many shapes and sizes and often fit well when created in or alongside gateways, parks, gathering spaces, and community centers. Because communities can celebrate and enhance their civic identity, they are especially appropriate in parks and downtown settings.

ENVIRONMENTAL ART

Environmental art is any kind of outdoor public art that uses materials with a direct connection to nature, landscaping, or organic materials. Environmental art can be temporary or permanent, and its scale can vary. Its thematic context addresses environmentalism and sustainability.

Sui Park, *Summer Vibe* (2021)
Riverside Park, New York City

FIBER

Fiber art is any kind of artwork that uses natural or synthetic fiber materials as the primary component of its overall composition. Fiber art can take the form of wall hangings, tree wraps, suspended sculptures, and beyond. Examples of fiber materials include fabric, yarn, polyurethane materials (like tarp), and mesh.

Beatriz Mayorca, *Evolve* (2019)
Oklahoma City, OK

FUNCTIONAL ART

Functional Art is ordinary infrastructure that has been reimagined and designed by an artist. Integrating unique designs into infrastructure may be an affordable and efficient way to create a major visual impact. Some possible options for functional art installations include bike racks, benches, play equipment, medians, subdivision walls, trash cans, transit stops, storm drains, manholes, monument signage, sidewalk treatments and more.

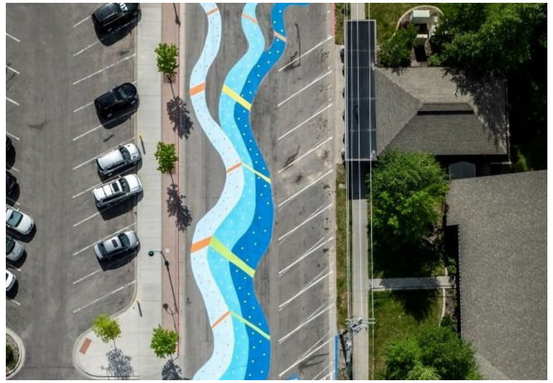

Maria Sengle, *Wild Tracks* (2024)
Jackson Hole, Wyoming

MURALS

Murals are large-scale, two-dimensional compositions that can be: 1) painted onto the surface 2) graphic reproductions printed onto vinyl that is adhered to a surface, or 3) painted onto a panel that is affixed to the building. Environmental conditions, artwork display duration, artist ability, timeline, and budget are all considerations for which mural application style is suitable for a project. While curating permanent works of art as part of the collection is important, ephemeral works such as murals allow for the exposure of many artists over a short period of time rather than a few artists over a long period of time.

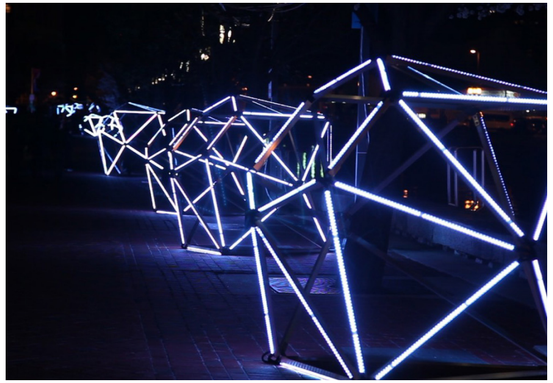

Mina Cheon, *Diamond Sculpture* (Series of 15) 2015

LIGHT INSTALLATIONS

Artists use lighting in creative and interesting ways in order to manipulate the built environment with limited physical impacts. Light installations may be used on existing buildings, in parks on substantial landscape features, or as part of a larger installation of sculpture. They may be especially useful and impactful when used in infrastructure projects.

Kerstin Brätsch, *Fossil Psychic Stone Mimicry (Palladiana, Mosaico_Bench I)*, 2024–2025

MOSAICS

Mosaics come in many shapes and sizes and include glass or ceramics. The relative flexibility of the application of mosaics responds well to many art contexts. Mosaics can be inlaid for flooring or wall elements, or they may be a component of a sculpture. Terrazzo floors can be considered as a kind of mosaic installation.

Allegory, *Flux Cocoon*
Lausanne

MULTIMEDIA

Multimedia installations may combine many other art types in ways that expand the imagination. Video, lighting, sculpture, murals, and more can be combined to make multimedia installations. Multimedia installations are especially useful for temporary or pop-up installations.

Meg White, *Muse of Discovery*
Lake Eola Park, Orlando, FL

SITE-SPECIFIC ART

Site-specific art is artwork that is aesthetically, conceptually, and/or thematically connected to the unique circumstances, culture, history, and environment of a particular site. Site-specific art can take many forms, and may be permanent or temporary. In this approach to art-making, artists extensively research the place, site, or area where the site-specific artwork will be placed. Site-specific art tells the story of a place through its surroundings, enriching the experience of the place itself.

City of Vacaville, CA 2024 Día de los Muertos celebration at Andrews Park & CreekWalk Plaza

PERFORMING ARTS

Dance, theater, and spoken word are common types of public performance. The scale and scope of these artforms may vary, as well as their performance spaces. Performing arts are not typically a permitted expenditure for public art funds.

PUBLIC ART PLACEMENT STRATEGIES

LUMA Festival 2023, Binghamton, NY

TIME-BASED MEDIA

Time-based Media is art that is created using photography, video, film, and/or audio whose composition transpired over a period of time. Time-based media artwork has clearly-defined beginning and ending points. This kind of artwork may run on a loop and is suitable for environments whose conditions are not suitable for traditional artwork materials. Time-based media typically assumes the form of projection mapping onto buildings, or sound-based artworks.

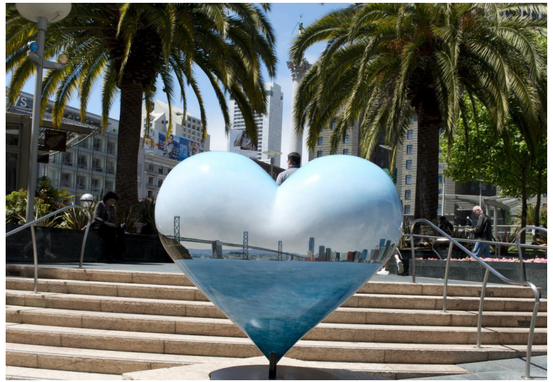

Hearts in San Francisco, Union Square, San Francisco, California (2012). Image by Carol Highsmith.

ITERATIVE PUBLIC ART PROJECTS

An iterative project is one that has many parts united by the same theme. For example, a park may commission an artist to create a series of sculptures placed in various locations around the park, united by the theme "Larger Than Life Flowers." Another example could be a recurring design motif or symbol placed in a range of sites around a town center, such as the famous San Francisco hearts, which take many iconic forms across the city. Iterative projects establish a "trail" for the community to follow across a predetermined area, making them a great option for retail areas, parks, or historic town centers.

William Crite, *Mosaic Tile Mural*, Pasadena, CA (1995)

SINGLE-PRESENTATION PUBLIC ART PROJECTS

Single-presentation public art projects are those that do not repeat in multiple locations and their compositions are limited to one site. Examples of these kinds of projects include, a large-scale sculpture commissioned for a city hall lawn; a unique mural on the facade of a community center; or light installation that is engineered to complement the detailed architecture of a historic building. Single-presentation projects may be temporary, or long-term, and they are primarily characterized by their function as a landmark in public space.

Cecilia Lueza, *A Timeless Journey*, Jacksonville, Florida (2017)

ART TRAIL + TRANSIT

Taking inspiration from the format of Iterative Public Art Programs, art that is placed along trails or integrated into a Public Transit system can shape transportation routes and provide a captivating, continuous experience for travelers. The benefits of art integrated into the mass transit experience includes increased ridership, enhanced system identity, and vandalism deterrence, in addition to an overall stimulating and engaging rider experience.

ENGAGING PUBLIC ART OPPORTUNITIES

Teddy Adams Band, Savannah, Georgia

PUBLIC PERFORMANCES

Dance, theater, spoken word, or another type of public performance is an ideal opportunity to be staged in public space or alongside public art. These displays have a particular relevance when staged at the unveiling of public artworks.

Open Air Studio, Gahanna, Ohio

POP-UP + TEMPORARY ART

Pop-up and Temporary Art are public art opportunities that exist in a community between one day and two years. Though temporary art is not intended to live for a generation, it can have a lasting impact on a community by creating a sense of surprise and joy in unexpected places. Some ideal locations for temporary installations include construction sites, sidewalks, alleyways, parks, and temporarily empty spaces and storefronts. Photography, chalk art, and artworks made using natural materials are ideal mediums for temporary, rotating experiences.

Community art in Milpitas, CA.

COMMUNITY PARTICIPATORY ART

Participatory art involves the community or a public group in the process of art-making, as guided by an artist. Artwork that emerges from a participatory experience enhances and celebrates its process and participants over short or long periods of time. Collaborative art pieces engage people to generate feelings of community pride and ownership. Milpitas has done a number of community participatory art projects in conjunction with special events, and are often a highlight of these programs.

CHAPTER FOUR

MILPITAS-SPECIFIC LOCATIONS + THEMES FOR PUBLIC ART

04

LOCATIONS FOR PUBLIC ART PLACEMENT
THEMES FOR PUBLIC ART PROJECTS

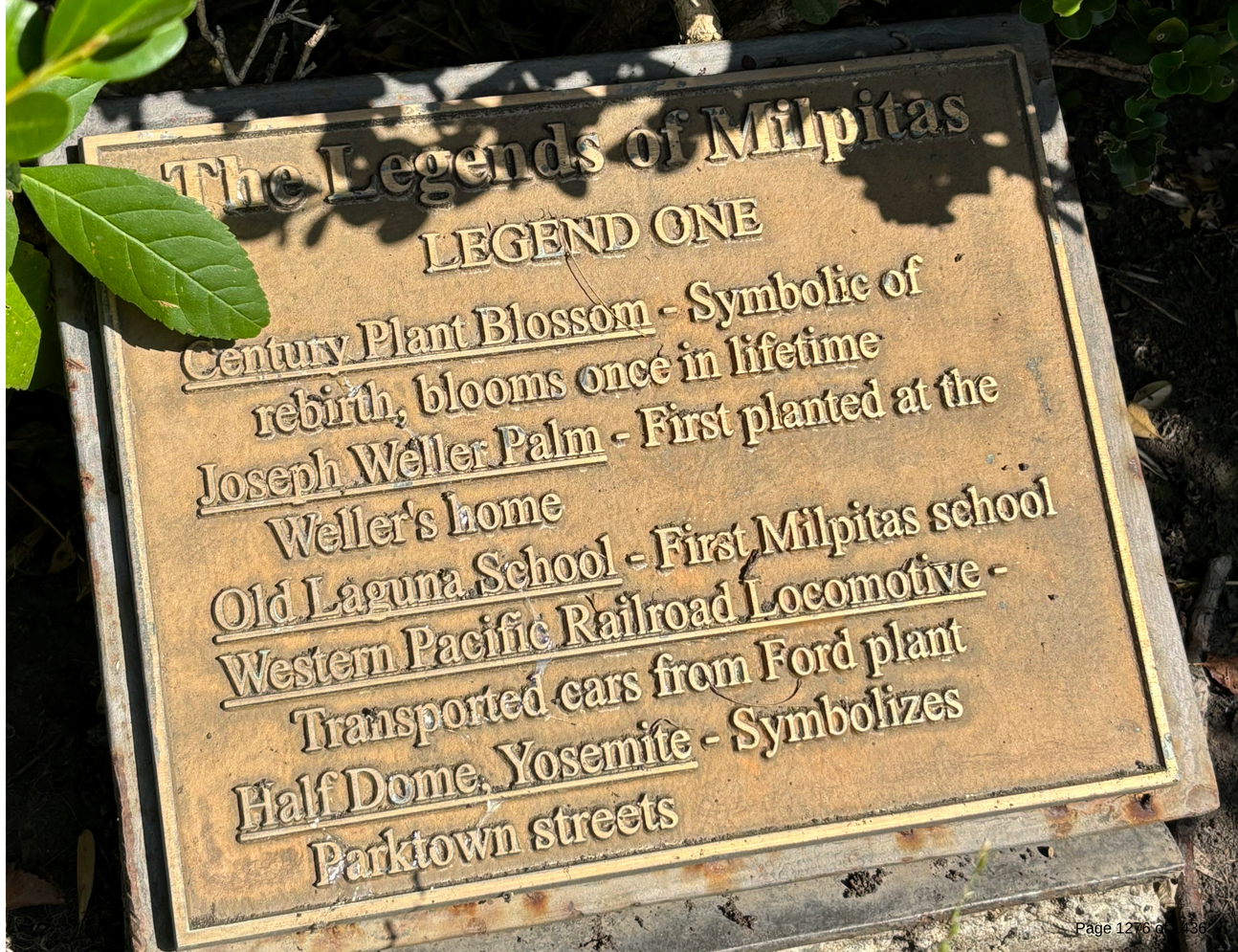

Vickie Jo Sowell,
Legends of Milpitas

STAIR MURAL + MOSAIC AT HIDDEN LAKE PARK

Hidden Lake Park is a true hidden gem in the center of Milpitas, but it does not yet have a prominent public art piece to anchor its sense of place.

This park provides pedestrian access to the Berryessa Creek Trail and multiple neighborhoods. Activating this site's highly visible staircases through a series of mosaic or mural treatments would emphasize Hidden Lake Park as a node for outdoor recreation and connectivity.

COST	$25,000 - $50,000 (Mural) $100,000 (Mosaic)
SPECIAL CONSIDERATIONS	None
IMPLEMENTATION TIMELINE	12 months

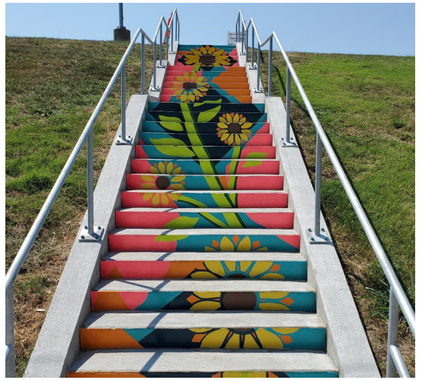

Ashley Corbello
Roeland Park, KS

Potential Project Placement

Tori Shao
Issaquah, WA

HILLSIDE INTERVENTION

Milpitas' picturesque hills have shaped the City's footprint, culture, and history for centuries. Public art could celebrate the landscape's history through a combination of temporary and permanent interventions, and offer an experience that is unique to Milpitas.

Although parts of the hillside may not have public access, public art can enhance the natural wonder and beauty of this majestic landscape, inspiring a strong sense of city-wide pride and sense of place.

COST	$25,000 - $200,000+
SPECIAL CONSIDERATIONS	Partnerships with private, county, and/or state entities would need consideration. Both temporary and permanent activations should withstand the regional rainy and fire seasons (November-March). Local ecological and/or environmental partners may be a helpful resource to implement projects that are sustainable and compliant with local and state laws.
IMPLEMENTATION TIMELINE	12- 18 months

Christo and Jeanne Claude, *The Umbrellas*
1991 (Los Angeles County)

Kelsi Anderson, *Birds of Paradise*
2024 Santa Rosa, CA

Bruce Munro, *Sensorio*
Paso Robles, CA

PUBLIC ART AND PLACEMAKING AT KEY INTERSECTIONS

Survey respondents selected Midtown Milpitas (near Main Street and Calaveras) as the place where they would most like to see public art in Milpitas. Implementing strategic public art projects along Main Street—specifically at the intersections with Weller (north end of Milpitas Library) and Serra (in front of Central Plaza)—offers a creative approach to defining Milpitas' intended public gathering areas. These nodes bookend Milpitas' downtown area, but could be better defined by crosswalk murals, gateway projects, or iterative treatments in walkways or on lightpoles.

It will be key to integrate public art at these sites in flexible ways: not only should public art enliven Main Street, but also it should define these intersections as primary sites for gathering, activities, and events. Paver compositions or murals would designate these intersections as centerpieces of the community.

COST	$25,000 - $200,000+
SPECIAL CONSIDERATIONS	Partnerships with private, county, and/or state entities would need consideration, based on right-of-way jurisdiction. Both temporary and permanent interventions should be considered and aligned with seasonal activities.
IMPLEMENTATION TIMELINE	6-18 months

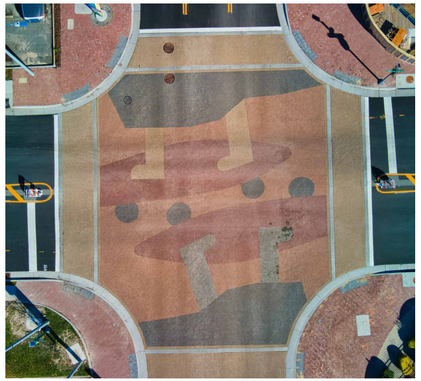

Richard Nickel, VIBE District Crosswalk
Virginia Beach, VA

Potential Project Placement

Cecilia Lueza, *Summertime,* 2021
Clearwater, Florida

ROTATING 2-DIMENSIONAL ART ON DIGITAL BILLBOARDS

The City has previously been given access to two digital billboards on Interstates 237 and 880. These sites are ideal for two-dimensional digital art opportunities that could rotate on a regular basis, but would require that the City enter into easement agreements with the billboard owners.

The digital billboard in front of City Hall would be an ideal opportunity for community-created artwork, or projects by local and emerging artists. Implementation for these projects is similar to mural processes, but because artists' work would be digital, this opportunity could offer emerging public artists hands-on experience with municipal art practices.

COST	$5,000 - $10,000 per project, before ongoing maintenance costs
SPECIAL CONSIDERATIONS	Partnerships with private, county, and/or state entities would need consideration, based on right-of-way jurisdiction. Both temporary and permanent interventions should be considered and aligned with seasonal activities.
IMPLEMENTATION TIMELINE	6 months

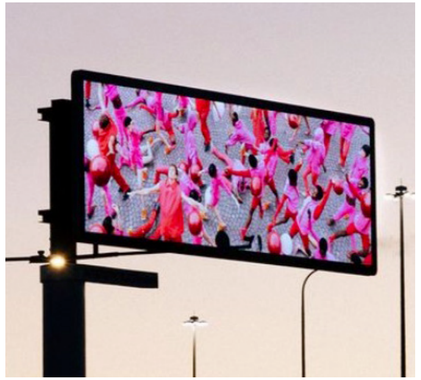

Pelle Cass, *Pink Dancers,* 2023
Override Billboard Project, Chicago, Illinois

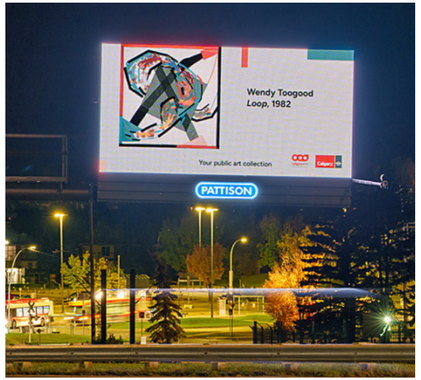

Wendy Toogood, *Loop,* 1982
Calgary Art Collection

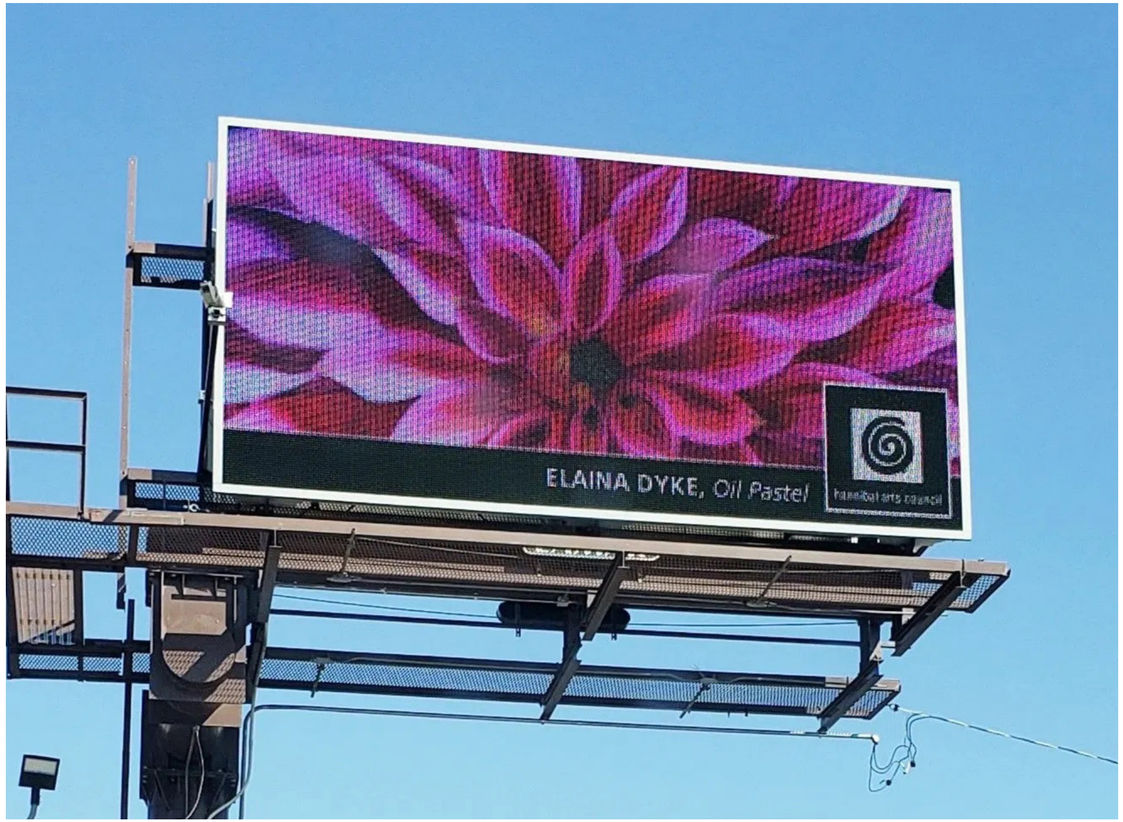

Elaina Dyke, *Petals,* 2021
Art in The Open, Hannibal Arts Council

MEDIAN PROJECTS ALONG JACKLIN, ABEL, AND N. MILPITAS BLVD.

Public art strategically located at primary entrance points into Midtown Milpitas and along major thoroughfares will welcome all into the city with unexpected whimsy, presence, and personality. Using infrastructure as a canvas, public art at these sites could be painted murals or structural enhancements designed by artists.

These interventions not only add character and visual interest to the area, but also provide opportunities for traffic calming and enhanced safety. Temporary and permanent interventions should be explored to maximize visual interest.

COST	$25,000 - $200,000+
POSSIBLE PARTNERS	County and State agencies
SPECIAL CONSIDERATIONS	Aim to site these works on City-controlled property and City-managed Rights-of Way. Aspirational projects along Calaveras/237 would require partnership with CalTrans.
IMPLEMENTATION TIMELINE	18-24 months

Papel Picado
Elizabeth Carrington

Potential Project Placement

Melissa Martinez, *Take Flight,* 2014
Tempe, Arizona

ENGRAVED OR INLAID PATHS

Milpitas' parks are already beautiful spaces for connection and recreation. Walking is both a popular pastime and transportation modality for residents of all ages. An ongoing series of engraved or invalid walking paths provide opportunities to enhance and enrich pedestrian experiences, while also elevating the City's infrastructure and public spaces.

These artist-designed projects could celebrate the many journeys of Milpitas' diverse community and the City's multilingual population through a series of words, phrases, and languages. The Hetch-Hetchy Trail is an ideal opportunity for this intervention, given its gravel paths and high visitorship.

COST	$25,000 - $100,000+
SPECIAL CONSIDERATIONS	Neighborhood groups, cultural organizations
IMPLEMENTATION TIMELINE	12 - 18 months

Esther Shalev-Gerz, *The Shadow,* 2018
University of British Columbia, Vancouver, Canada

Potential Project Placement

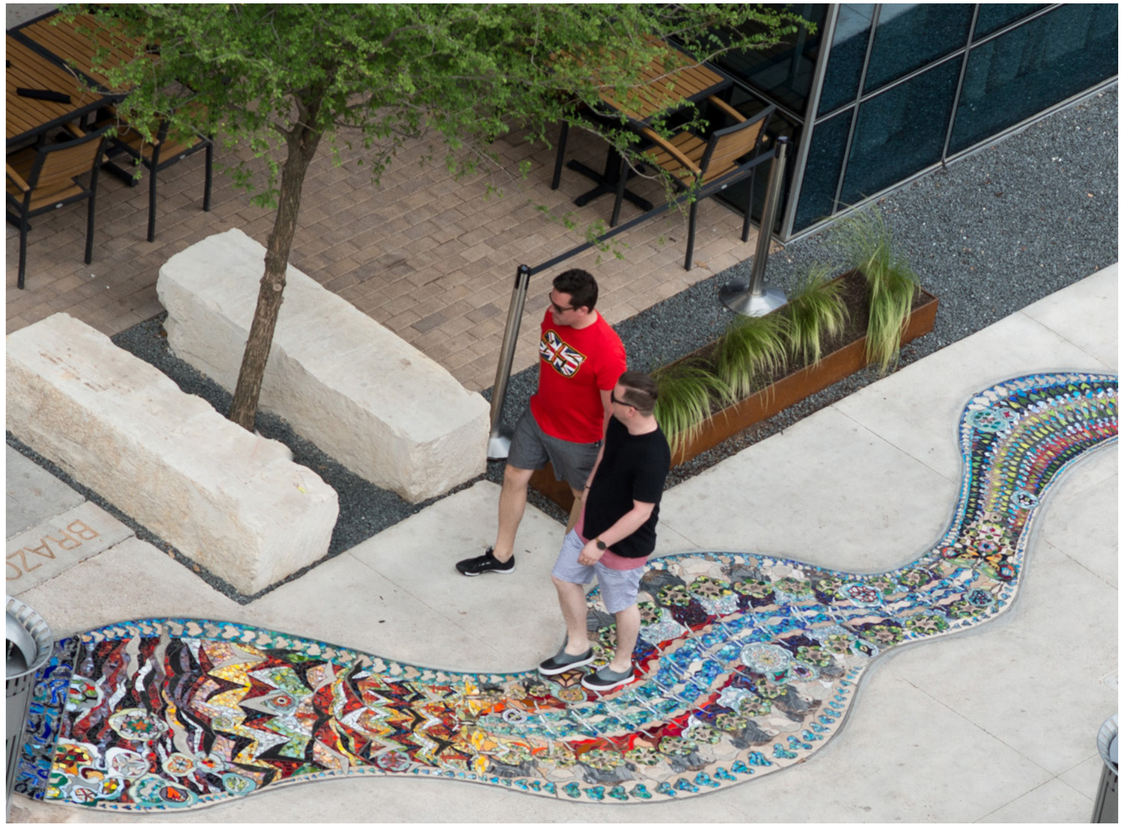

Ryah Christensen, *Reflections on the Brazos,* 2015
Austin, TX

HETCH-HETCHY TRAIL INTERVENTIONS

Despite being part of a larger trail system, Milpitas' Hetch-Hetchy Trail locations are integrated into the City's urban fabric. These could be ideal locations for pop-up experiences and temporary projects, which would not require permanent placement, structural engineering, or invasive installation. Similar pop-up experiences could occur in any of Milpitas' larger parks as well.

Additionally, the water tanks located in these parks are ideal opportunities for murals to enliven the trail experience.

ARTWORK	$5,000 - $25,000+
SPECIAL CONSIDERATIONS	An easement or MOU with the National Park Service will likely be required for all projects.
IMPLEMENTATION TIMELINE	12- 18 months

Chiaozza, Lawn Lumps Photo by Daniel Avila
NYC Parks

Fional Clarke

POTENTIAL LOCATIONS FOR HETCH-HETCHY TRAIL LOCATIONS

EXPANDED UTILITY BOX PROGRAM

Utility Box art remains one of the most high-impact, cost-effective approaches to public art and placemaking. There are 77 city-owned utility boxes that are prime opportunities for public art. Milpitas has implemented painted utility boxes in the past, but vinyl projects offer a greater range of project possibilities, as artists' work is digitally transformed into the vinyl wrap. This option also offers straightforward maintenance, and can be replaced every 3-5 years.

The structure of the Utility Box program could be expanded to the restroom facilities and service buildings at Milpitas' many parks.

COST	$1,500 - $5,000+
SPECIAL CONSIDERATIONS	None
IMPLEMENTATION TIMELINE	3-6 months

John Thurston, Hillcrest, CA

Unknown Utility Box

POTENTIAL LOCATIONS FOR UTILITY BOX PROGRAMING

FUNCTIONAL ART AND SOCIAL SPACES

Milpitas' parks are a beloved community asset, in addition to serving as the catalyst for the City's public art program over two decades ago. Artist-designed social spaces feature unique, visionary elements that foster interaction and connection.

Additionally, functional features enhance the site through otherwise ordinary elements of public spaces. The City already features a number of artist-designed benches in its collection, which could continue to grow through newly-commissioned waste receptacles, bike racks, shade structures, and other standard fixtures.

Incorporating such features around Milpitas bolsters neighborhood engagement and enhances park spaces through whimsical, yet highly practical artist-design features.

ARTWORK	$100,000 - $2 million, depending on size and scope of project
SPECIAL CONSIDERATIONS	Placement in high-traffic settings, material maintenance, seasonality of installations
IMPLEMENTATION TIMELINE	3 months for readymade pieces to 18 months for commissioned projects

Randy Purcell,
Bee Cycle, 2016, Nashville, TN

Yang Chi Lee,
The Wings, 2012, Phoenix

RE-site, *Nested Hive*, 2021
Charlotte, NC

MILPITAS SKATE PARK PUBLIC ART ENHANCEMENT

This 20,000 square foot canvas is an unparalleled opportunity to celebrate Milpitas' vibrancy in a recreational setting.

A series of murals at the Milpitas Skate Park could expand over time, centering around cultural celebration, feature bold and bright colors, and express the very best of Milpitas' diverse community.

ARTWORK	$45-$55 per square foot of artist-painted surface
SPECIAL CONSIDERATIONS	Ensuring that appropriate materials are used for painting the surface to ensure public safety, wear and tear, and artwork maintenance.
IMPLEMENTATION TIMELINE	6-10 months, but murals could develop over many years, rather than be installed at one time.

Ian Tilmann Skatepark, Safety Harbor, FL, Beth Warmath and Heather Richardson

Andrew Schoultz, Wynwood, Miami

POTENTIAL SKATE PARK PROJECT PLACEMENT

UTILITY POLE ACTIVATIONS

Utility poles around feature spaces for standard banners, which are currently utilized for local event advertising and other marketing purposes. Light poles along Calavares Blvd., in particular, feature spaces for banners, but are currently vacant.

These spaces could also be used for public art in an approach similar to that for utility cabinets and bus stations. If advertising space is a priority for the utility poles, then the program could explore smaller-scaled sculpture installations on the poles, creating a surprising public art trail above walkways and roads.

LOCATIONS	Any city-owned utility or light poles; any poles on state-owned roads may require CalTrans approval.
IMPLEMENTATION COSTS	Banner: $1,000 artist honorarium + $1,000 printing and installation fees Sculpture: up to $20,000 for a multi-site sculpture installation
SPECIAL CONSIDERATIONS	Projects should rotate every 8-10 months
IMPLEMENTATION TIMELINE	The overall project will require 3-4 months for selection and planning, but installation should require no more than a few days to a week. This is another prime opportunity for working with community organizations, emerging artists, and local youth artists.

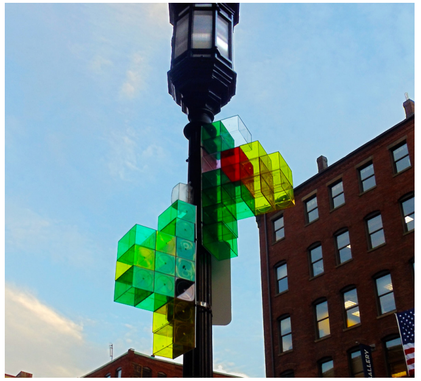

Claudia Ravaschiere and Michael Moss' Street Cathedral Boston

Ai, Summer Connections, 2022. Photography by Tori Lambermont, Mississauga

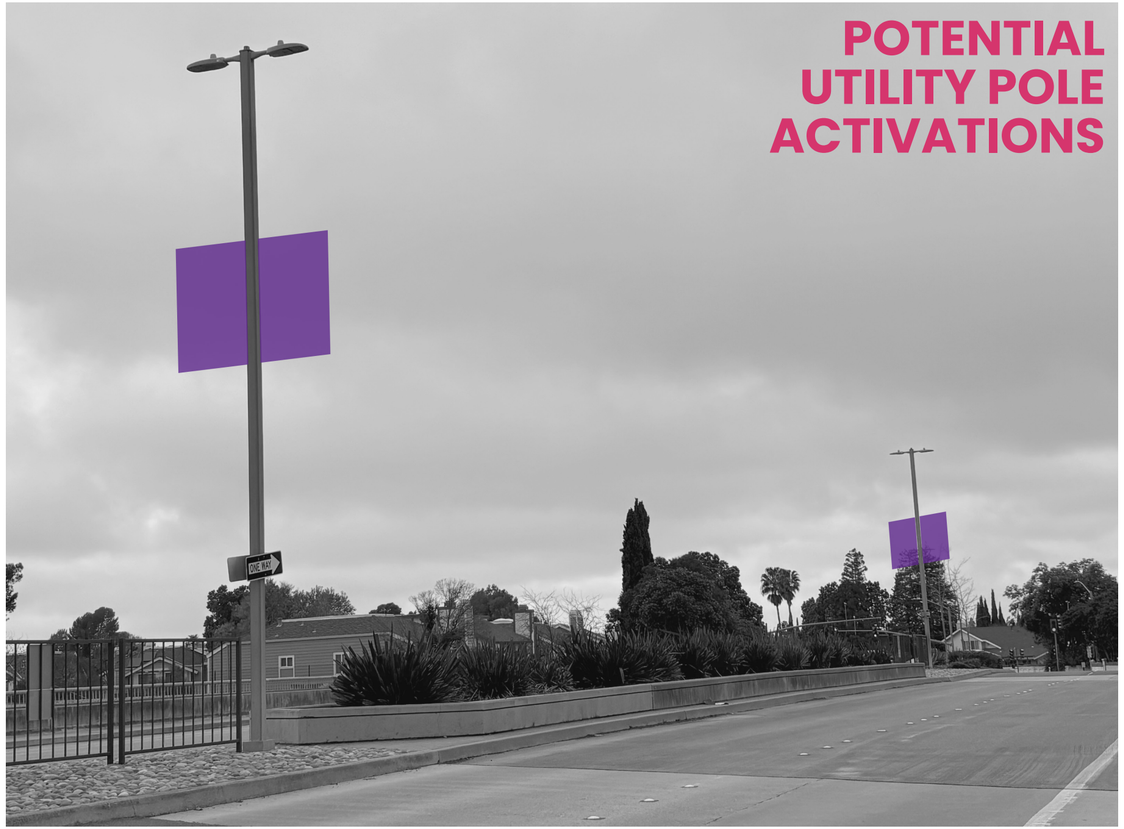

THEMES FOR PUBLIC ART PROJECTS

The community observed that future public art in Milpitas should strengthen the City's identity, celebrate the diversity of Milpitas, and beautify the City's buildings, streets, and city-owned facilities.

While honoring the City's history was not identified as a top priority for public art, proposed themes for future projects take inspiration from Milpitas' history, which can be recontextualized through different lenses to reveal the City's unique identity and align with the vision for the Public Art Plan.

Bill Gould,
Green Tree

LI-sculp-Runners-2002

ALWAYS IN MOTION

From its early days along the Transcontinental and Western Pacific Railroad, to its present-day VTA and BART services, Milpitas is always in motion. In the 1950s, Ford's Milpitas plant was known for manufacturing the iconic Mustang, Falcon, and Maverick. Even the modern-day sport of hang gliding has roots in Milpitas: the first successful foot-launch of a hang glider happened over Santa Clara County's Ed R. Levin County Park.

Today, Milpitas is within Silicon Valley and the Bay Area's mass transit system, and the City's stations feature works of public art that celebrate Milpitas' diversity and natural beauty. The idea that Milpitas is always in motion could be articulated through a number of public art typologies, including a kinetic project (not unlike the always popular Kicker Kid at Cardoza Park), or a series of functional artworks. Such projects should take a nuanced approach to Milpitas' history with progress, transportation, and motion, and offer neutral imagery and an abstract perspective that serves as a playful, unexpected conversation starter.

Shadows of Meaning
Urban Rock Design, Dreiser

Urban Rock Design, Vortex

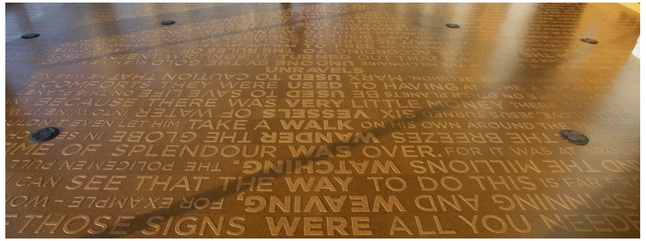

Verse,
Ann Hamilton

A COMMON LANGUAGE

Diverse communities and cultures have shaped Milpitas for centuries, and it continues to be a place where all are welcome. Public art should inspire inclusivity, belonging, and representation, yet half of survey respondents indicated that the current public art collection does not achieve these goals.

Future public art should embrace themes of cross-cultural connection and shared values, but could also highlight the distinct contributions of ethnic and cultural groups to the community. As mentioned above, an artist-designed engraved or inlaid walking path spanning a walkable distance could feature welcoming words in multiple languages. A community-centered project could include temporary photography displays in Milpitas' parks featuring original artwork by neighborhood residents, showcasing traditions, places, and customs of the many backgrounds that comprise Milpitas' rich cultural fabric. The City could also support annual light projections on City-owned buildings, featuring time-based artworks that represent stories, sensations, and experiences of Milpitas' many communities.

Mili Romano with Studio Ciorra and Sabrina Torelli,
Light Path

Urban Rock Design

I have a story to tell you...,
Pepón Osorio's

Cloud House,
Matthew Mazzotta

THE GATHERING HOUSE

The Gathering House is a proposed large-scale, permanent public art project for placement in one of Milpitas' main parks or public spaces. This structure functions as a place for connection, sharing, safety, and shelter, and its open structure invites all into its space. Inspired by the legacy of housing integration in the Sunnyhills neighborhood, this project emphasizes shared experiences with neighbors and coming together across our shared needs and values. The potential for community impact through this project is high, as it responds to the community's need for public art that fosters belonging, celebrates diversity, and honors Milpitas' history through a nuanced, recontextualization of Sunnyhills' revolutionary place in American history.

Erik and Israel Nordin, *The Seed,* (2017)
Sterling Heights, MI.

Matthew Mazzotta, *Wrapped in Sunbeams,* 2021,
LA, California

RE-site Chromatic Harvest Arvada Ridge Commuter
Rail Station, Arvada CO 2017

LAND OF SUNSHINE, FRUIT, AND FLOWERS

Milpitas is known for its fertile landscape and diverse plants and crops, but the City's workforce and professional industries have expanded over time. Today, references to its agricultural history are present everywhere, including in its public art. Going beyond realistic representations of this legacy, Milpitas could embrace its identity as the land of sunshine, fruit, and flowers through whimsical, unexpected projects, such as larger-than-life acorn sculptures, fig leaf-inspired roadway enhancements, and a vibrant, graphic mural at Main and Serra displaying a cornucopia of Milpitas' historic crops.

Other projects could take a more nuanced approach, including a subtle, artist-designed light installation responding to seasonal daylight cycles, or a series of mosaics that converge themes of development, childhood, and community. Growth is at the heart of Milpitas's identity and will continue to foster its future.

We Are Fairtrade, Isaac Tapia and Rodrigo Alvarez,
Lawrence, KS

CHAPTER FIVE

STRATEGIC RECOMMENDATIONS

05

PROGRAM + ADMINISTATIVE RECOMMENDATIONS
SUMMARY OF STRATEGIC RECOMMENDATIONS

Adrian Susnea-Litman,
Garden Fantasy

1. POLICY UPDATES

1.1. Expand the Public Art Program's current policy to include a Collection Management policy, which includes processes for loaned art, donations, maintenance, and deaccession. The proposed policy can be found on p. -.

1.2. Expand the Public Art Program's current policy to include an Acquisition policy, which outlines processes for purchasing existing artwork and commission artwork for addition to the collection. The proposed policy can be found on p. _.

1.3. Formalize the duties and responsibilities of a Public Art Administrator, who may be a part-time staff or consultant position.

2. AUDIT CURRENT COLLECTION AND EXPLORE APPROPRIATE MAINTENANCE TREATMENTS

2.1. Consult updated Public Art Policy document for updated deaccession and maintenance processes.

2.2. Determine which pieces, if any, should be candidates for deaccession by reviewing the Collection Assessment report.

2.3. Explore annual cost of an on-call Conservation Firm for conservation consultation, treatment services, preventative conservation support, and creating an emergency plan for the collection.

2.4. Develop a five-year maintenance plan for the collection, based on the Collection Assessment report.

3. EXPAND PUBLIC ART FUNDING

3.1. Milpitas should increase its public art assessment fees for private development from one-half (.5) percent to at least one and a half (1.5%), if not greater to be in line with surrounding communities and their commitment to public art in private development.

3.2. Milpitas should specify that the private development in-lieu fee is an amount equal to the assessed 1.5%

3.3. Specify definition of projects that are eligible (public and private)

4. COLLABORATE WITH PUBLIC AND PRIVATE ENTITIES

4.1. Strengthen partnerships with VTA, BART, and CalTrans around public art opportunities on their properties and infrastructure. Discuss partnerships for possible public art projects on transit infrastructure, including the Montague elevated tracks, and the Calaveras Blvd. medians.

4.4.1. Consider hosting a workshop for Milpitas' Arts Commission and members of the above transportation agencies' art boards and decision-making groups.

4.2. Deepen collaboration with the City's Economic Development and Planning departments to encourage private developers to install public artworks on their properties when appropriate, and create literature to support these efforts.

4.3. Work with local businesses to explore mural easements through the City's existing mural program to create opportunities for pedestrian friendly-enhancements to transit stations and crosswalks, which would support public safety and traffic calming goals.

4.3.1. Consider proposing a matching grant that the City administers to property owners who indicate interest in placing murals on their property within this designated area.

4.3.2. Collaborate with local businesses on private installations, and provide courtesy reviews of installation proposals.

5. INCREASE ACCESSIBILITY TO THE PUBLIC ART COLLECTION.

5.1. Consistent artwork signage, possibly in multiple languages, is needed across the City's collection in order to establish the collection's identity and presence around town. Signage should include the following content: Title of work, artist name, medium, year installed, artist statement (If applicable). Interactive QR codes or other contextual strategy could be implemented at each artwork to provide additional information about each work in the collection.

5.2. A published Public Art Field Guide could elevate the City's pride in the collection. Updating the guide and printing new editions would be recommended every 5-10 years.

5.3. The Collection's current online presence could be enhanced with an online public art map that could double as a collection management system for the collection. If this option is pursued, the collection should be professionally photographed, as not all artworks have been formally documented.

SUMMARY OF STRATEGIC RECOMMENDATIONS

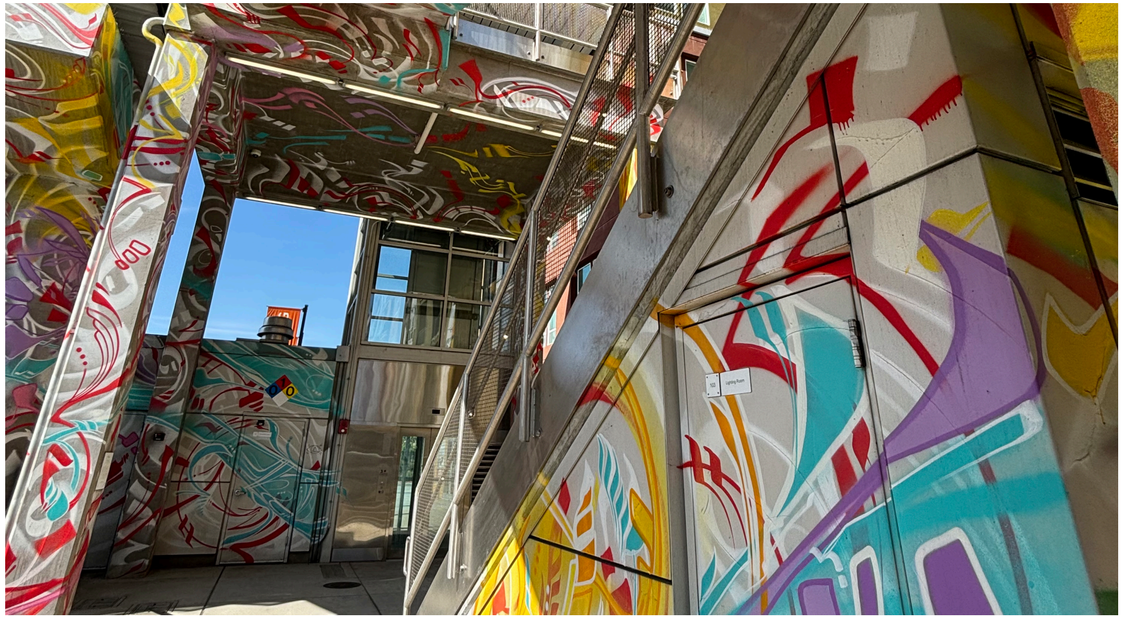

Ryan Petersen,
Together We Are More

The Plan specifically addresses recommendations for public art projects, themes, placement, and program strategies to ensure an expanded public art program that reflects Milpitas for generations to come. The following broadly summarizes the Plan's approach to its strategic recommendations, based on community feedback about:

- **Community-centric, Inclusive, and Accessible:** Public art should resonate with the diverse community, especially younger demographics. The collection should be more accessible, which can be addressed through bilingual interpretive materials, contextualizing QR codes, and a Public Art Field Guide. The process of creating public art should involve residents in decision-making, from concept to installation. Additionally, the City should explore opportunities for Community Art-making, led by local artists. As outlined in the Recommendations above, these projects should be funded separately from the Public Art Fund.
- **Regional context:** Among larger, regional cities (such as San Francisco and San Jose), Milpitas' public art and cultural resources are well-sized to meet needs of the community, which supports a continued desire to emphasize community pride through Milpitas' public art on a local scale.
- **Strategic placement:** Art should be strategically placed to maximize its impact, such as in high-traffic areas and community gathering spaces to strengthen the bond between the community and public art.
- **Collaboration:** A collaborative approach between City Departments (including Planning, Recreation & Community Services, and Economic Development) and the Community (developers, artists, neighborhood groups, etc.) is crucial for successful public art initiatives. The Public Art Program should also seek collaboration with businesses, schools, private entities, and cultural organizations to expand the reach of public art.
- **Balancing Tradition and Innovation:** Milpitas should strike a meaningful balance between traditional forms of expression and innovative mediums to engage a wider audience and stay relevant in Silicon Valley. The City is poised to be an example of how public art can support creative wellness within a STEM-centric community.
- **Sustainable funding mechanisms:** While the existing Percent for Art ordinance provides substantial funding support for public art acquisition in Milpitas, stakeholders expressed a desire for clear forms of support for long-term collection care and maintenance. The City should consider increasing the one-half percent developer fee to one and one-half percent, or greater.

CHAPTER SIX

APPENDIX

ACT CONSERVATION COLLECTION ASSESSMENT
ROTH ART GROUP COLLECTION APPRAISAL REPORT
PERCENT FOR ART CASE STUDIES
PERCENT FOR ART ORDINANCE RECOMMENDED DRAFT UPDATES
PUBLIC ART POLICY RECOMMENDED DRAFT UPDATES

Laurel True,
Starscape Bench

ACT Art Conservation
Fine Art Conservation

November 12, 2024

Anna Talarico
Designing Local
20 E Broad St. suite 1010,
Columbus, OH 43215

Dear Anna,

Thank you so much for the opportunity to work with Designing Local on the Conservation Assessment of 26 public artworks that comprise the public art collection of the City of Milpitas, CA.

Enclosed in this report is the following information:

- Condition Assessment of each of the 26 artworks
- Treatment Proposal for each of the 26 artworks
  - The Treatment Proposal is for a thorough treatment that would bring the artworks back to stable condition after years of not receiving any maintenance. Although the collection is doing well for having not been maintained, there are several artworks which require more invasive treatment to reach a stable condition and most pieces will require at least a few more hours beyond standard maintenance for this initial treatment.
- Estimate range for the proposed treatments
  - The estimates are presented with a minimum and maximum for both the estimated hours and cost.
- Estimated Materials Cost
  - The materials include specialized treatment supplies as well as lift rentals when necessary.
- Estimate for the Standard Maintenance for each of the 26 artworks
  - These estimates are also presented with a minimum and maximum for both the estimated hours and price.
  - A Standard Maintenance estimate differs from the Treatment Proposal in that it represents maintenance costs after the initial, thorough treatment that would bring the artwork back to stable condition. These estimates provide a more accurate representation of the cost of annual maintenance for the collection moving forward. As is recommended for most outdoor sculpture artworks, we recommended that the objects be maintained once a year. The condition of the artworks would be reassessed during each maintenance treatment, and recommendations to either lengthen or shorten the time between treatment would be made accordingly.

Contents in order:

1. Collection Manifest including Condition Assessments, Treatment Proposals, Estimated Cost, Estimated Materials Cost, Estimated Standard Maintenance.
2. Jobs List including Job Number, Artwork Location, Estimated Treatment Hours and Cost, Estimated Standard Maintenance Hours and Cost, Estimated Materials Cost.

Images, including overall images, detail images depicting condition concerns, and annotated images are provided in a DropBox folder for your convenience. Follow the link here.

All of the information that was collected and recorded about the artworks during this assessment is stored in a File Maker database dedicated to the collection. This database is only accessible by ACT Art Conservation staff, however individual reports or collections lists can be emailed upon request.

The Estimates provided for both the Treatment Proposals and for the Standard Maintenances are intended to assist with budgeting and are not a final quote for the work. Due to changes in costs for equipment rentals, materials and labor, new estimates would be generated if ACT Art Conservation is contracted to complete the treatment of the collection. We anticipate that there would be minimal change in the estimated costs, but due to the unpredictability of future pricing for equipment and supplies, pricing confirmation will be required if and when treatment is scheduled.

Sincerely,

Emily K. Rezes

Emily Rezes
Senior Objects Conservator
ACT Art Conservation LLC
objects@actartconservation.com

ACT Art Conservation, LLC
Fine art conservation of paintings, objects and works on paper
1033 S. Claremont St, San Mateo, CA 94402
Phone: 415.634.7489
E-Mail: studio@actartconservation.com Web: www.actartconservation.com

Client Name Anna Talarico

Designing Local
20 E Broad St. suite 1010,
Columbus, OH 43215

Total Estimate Minimum: $176,350

Total Estimate Maximum: $254,000

Estimated Materials: $18,200

Materials Include: equipment rentals and specialized treatment materials

Object	Condition / Treatment Proposal	Conservation Estimate
2024-172-1 Location: Jose Higuera Park James Dinh Circle of Time 2024 Granite, concrete, paint	Condition Overall soil and dust accumulation Organic debris Bird droppings Proposed Treatment Photodocument before, during and after treatment Overall surface cleaning with appropriate methods and materials	Minimum: $1,000 Maximum: $1,500 Estimated Materials: $150 **Standard Annual Maintenance Estimates:** Minimum Maintenance: $1,000 Maximum Maintenance: $1,500

Object	Condition / Treatment Proposal	Conservation Estimate

2024-172-2

Location: Civic Center Plaza

Carla Moss
Flute Player
NA

Condition

Overall soil and dust accumulation
Organic debris
Cobwebs
Blue/green copper corrosion
Copper corrosion due to prolonged contact with water
Orange ferrous corrosion found in discrete point around the chin of the figure, likely from and internal steel armature
Bird droppings and associated copper corrosion
Mineral deposits
Wax wear and loss
Bronze appears “dry” due to wax loss
Minor patina loss in green clothing with brown patina exposed underneath

Proposed Treatment

Photodocument before, during and after treatment
Overall surface cleaning with appropriate methods and materials
Corrosion reduction using appropriate chemical and/or mechanical methods
Patina integration using appropriate methods and materials
Hot wax application
Cold wax application

Minimum: $5,400

Maximum: $6,800

Estimated Materials: $300

Standard Annual Maintenance Estimates:

Minimum Maintenance: $3,400

Maximum Maintenance: $5,100

Object	Condition / Treatment Proposal	Conservation Estimate

2024-172-3

Location: Barbara Lee Senior Center

MaryAnn Baker
Cameo Bench
2009
Bronze, exterior grade acrylic

Condition

Overall soil and dust accumulation
Organic debris
Cobwebs
Blue/green copper corrosion
Copper corrosion due to liquid deposit on bench seat
Coating deterioration
Blistered and delaminated coating, appearing as white bubbles concentrated in the bronze that is textured to appear like tree bark on both the tree and the bench
Bronze appears "dry"
Areas of paint loss, concentrated in the gold painted frames that surround the cameos.
Bird droppings and associated corrosion

Proposed Treatment

Photodocument before, during and after treatment
Overall surface cleaning with appropriate methods and materials
Corrosion reduction using appropriate chemical and/or mechanical methods
Solubility testing was completed on the coating, resulting in minimal solubility in Acetone, Ethanol, and Mineral Spirits. This suggests that the coating has cross-linked, reducing its solubility. Further testing would be completed to determine the best removal method on the day of treatment
Reduction of deteriorated coating using appropriate chemical and/or mechanical methods
Patina integration using appropriate methods and materials
Cold wax application

*Consultation of historic images and communication with artist to determine if the areas of paint loss should be inpainted.

Minimum: $6,800

Maximum: $10,200

Estimated Materials: $500

Standard Annual Maintenance Estimates:

Minimum Maintenance: $3,400

Maximum Maintenance: $3,400

Object	Condition / Treatment Proposal	Conservation Estimate

2024-172-4

Location: Senior Center Patio

MaryAnn Baker
Happy Hats Bench
2009
Bronze, exterior grade acrylic paint

Condition

Overall soil and dust accumulation
Organic debris
Cobwebs
Copper corrosion due to prolonged contact with water around the feet of the bench
Copper corrosion due to liquid deposit and run-off
Bird droppings and associated corrosion
Areas of coating loss
Bronze appears "dry"

Proposed Treatment

Photodocument before, during and after treatment
Overall surface cleaning with appropriate methods and materials
Corrosion reduction using appropriate chemical and/or mechanical methods
Reduction of deteriorated coating using appropriate chemical and/or mechanical methods
Cold wax application

Minimum: $3,400
Maximum: $6,800
Estimated Materials: $500

Standard Annual Maintenance Estimates:
Minimum Maintenance: $1,700
Maximum Maintenance: $3,400

2024-172-5

Location: Senior Center Patio

MaryAnn Baker
Tulips Bench
2009
Bronze, exterior grade acrylic paint

Condition

Overall soil and dust accumulation
Organic debris
Cobwebs
Copper corrosion and minor mineral deposits on the back of the bench due to water runoff
Copper corrosion due to liquid deposit on the seat of the bench
Significant blue/green copper corrosion due to prolonged contact with water around the feet. The bench is bolted to the concrete, increasing water retention at the interface between the bronze and the concrete
Bird droppings and associated corrosion
Minor cracking the the paint film found in the tight curves in the flowers and leaves

Proposed Treatment

Photodocument before, during and after treatment
Overall surface cleaning with appropriate methods and materials
Corrosion reduction using appropriate chemical and/or mechanical methods
Reduction of deteriorated coating using appropriate chemical and/or mechanical methods
Cold wax application

Minimum: $3,400
Maximum: $6,800
Estimated Materials: $500

Standard Annual Maintenance Estimates:
Minimum Maintenance: $1,700
Maximum Maintenance: $3,400

Object	Condition / Treatment Proposal	Conservation Estimate

2024-172-6

Location: Cesar Chavez Plaza, Barbara Lee Senior Center

MaryAnn Baker
Let's Dance Bench
2009
Bronze, exterior grade acrylic paint

Condition

Overall soil and dust accumulation
Organic debris
Cobwebs
Several feet are partially embedded in the the grass and soil
Bright blue/green copper corrosion on the feet due to prolonged contact with water, soil and grass
Salt efflorescence on the legs of the bench due to water and salt migration up from the soil
Combination of copper corrosion and salts could lead to the development of bronze disease if left untreated
Copper corrosion due to prolonged contact with water on the seat of the bench
Bird droppings
Cracking in paint, concentrated in tight curves
Fading of paint film

Proposed Treatment

Photodocument before, during and after treatment
Overall surface cleaning with appropriate methods and materials
Corrosion reduction using appropriate chemical and/or mechanical methods
Treatment of bronze disease using appropriate methods and materials
Consolidation and stabilization of paint
Cold wax application

*Recommend that the bench be moved or that a new concrete pad be poured in the current location to eliminate contact between the bench and the soil

Minimum: $6,800

Maximum: $10,200

Estimated Materials: $500

Standard Annual Maintenance Estimates:

Minimum Maintenance: $1,700

Maximum Maintenance: $3,400

Object	Condition / Treatment Proposal	Conservation Estimate

2024-172-7

Location: Civic Center Plaza

MaryAnn Baker
Veterans Memorial Bench
NA
Bronze, exterior grade acrylic coating

Condition

Overall soil and dust accumulation
Organic debris
Coating deterioration
Blistered and delaminated coating
Areas of coating loss
Areas where the coating was never applied ("Holidays") where brushstrokes in the coating are visible next to bare and dry looking bronze
Areas of preferential copper corrosion due to the difference in exposure to the elements between coated and uncoated areas
Bird droppings

Proposed Treatment

Photodocument before, during and after treatment
Overall surface cleaning with appropriate methods and materials
Corrosion reduction using appropriate chemical and/or mechanical methods
Reduction of deteriorated coating using appropriate chemical and/or mechanical methods
Solubility testing was completed on the coating resulting in minimal solubility in acetone, ethanol and mineral spirits. This suggests that the coating has cross-linked, reducing its solubility. Further testing would be completed to determine the best removal method on the day of treatment
Cold wax application or application of acrylic coating depending on the results of the coating removal

Minimum: $6,800

Maximum: $10,200

Estimated Materials: $300

Standard Annual Maintenance Estimates:

Minimum Maintenance: $1,700

Maximum Maintenance: $3,400

Object	Condition / Treatment Proposal	Conservation Estimate
2024-172-8 Location: Hallway wall, Barbara Lee Senior Center 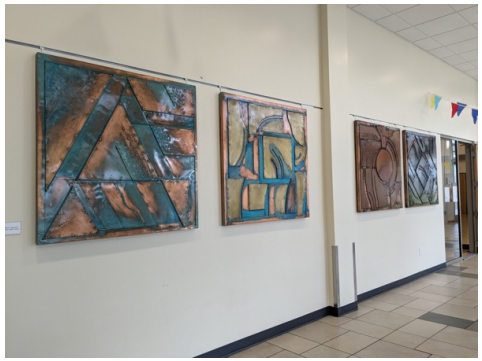 Adrian Susnea-Litman Four Seasons 2010 Sheet metal, metal wire, paint, clear coat	Condition Overall soil and dust accumulation concentrated on horizontal surfaces Minor scuffs and scratches in the clear coat Proposed Treatment Photodocument before, during and after treatment Surface vacuum with HEPA vacuum; recto, verso Surface clean with dry eraser method / soot sponge / soft cloth Polish with appropriate methods to reduce scuffs and scratches	Minimum: $2,000 Maximum: $4,000 Estimated Materials: $200 **Standard Annual Maintenance Estimates:** Minimum Maintenance: $1,000 Maximum Maintenance: $2,000

Object	Condition / Treatment Proposal	Conservation Estimate
2024-172-9 Location: Lobby, Barbara Lee Senior Center Adrian Susnea-Litman Garden Fantasy 2010 Tile, mortar, grout, paint	Condition Overall soil and dust accumulation Thin layer of grime overall Minor losses in some of the tiles Proposed Treatment Photodocument before, during and after treatment Surface vacuum with HEPA vacuum; recto, verso Overall surface cleaning with appropriate methods and materials Fill and inpaint small losses	Minimum: $2,000 Maximum: $4,000 Estimated Materials: $200 **Standard Annual Maintenance Estimates:** Minimum Maintenance: $2,000 Maximum Maintenance: $4,000

Object	Condition / Treatment Proposal	Conservation Estimate
2024-172-10 Location: Barbara Lee Senior Center	Condition Overall soil and dust accumulation Scratches / abrasions in the acrylic glazing	Minimum: $750 Maximum: $1,000 Estimated Materials: $100
 Joanie Popeo Our View 2021 Acrylic?	Proposed Treatment Photodocument before, during and after treatment Surface vacuum with HEPA vacuum; recto, verso Surface clean with dry eraser method / soot sponge / soft cloth --- Photodocument Have the piece reframed if the scuffs are a concern	**Standard Annual Maintenance Estimates:** Minimum Maintenance: $250 Maximum Maintenance: $250

Object	Condition / Treatment Proposal	Conservation Estimate
2024-172-11 Location: Barbara Lee Senior Center Adrian Susnea-Litman Thriving Legacy 2011 Acrylic mural	Condition Overall soil and dust accumulation Proposed Treatment Photodocument before, during and after treatment Surface vacuum with HEPA vacuum; recto, verso Surface clean with dry eraser method / soot sponge / soft cloth Aqueous clean with appropriate methods and materials Treatment requires a lift rental	Minimum: $6,000 Maximum: $9,000 Estimated Materials: $1,500 **Standard Annual Maintenance Estimates:** Minimum Maintenance: $4,000 Maximum Maintenance: $8,000

Object	Condition / Treatment Proposal	Conservation Estimate
2024-172-12 Location: Milpitas City Hall David Alan Clark David Alan Clark 2014 Bronze	**Condition** Overall soil and dust accumulation Organic debris, heavy pine needle and leaf deposit on bronze base from nearby tree Cobwebs Bird droppings and associated corrosion Wax deterioration Wax wear and loss Blue/green copper corrosion Rising damp with associated minerals, salts and blue/green copper corrosion found along the bottom 1/3 of the bronze base Possible salt efflorescence/mineral deposits from rising damp/water retention at the interface between the bronze and concrete base **Proposed Treatment** Photodocument before, during and after treatment Overall surface cleaning with appropriate methods and materials Corrosion reduction using appropriate chemical and/or mechanical methods Reduction of mineral deposits/salts using appropriate methods and materials Hot wax application Cold wax application Treatment requires a lift rental	Minimum: $10,200 Maximum: $13,600 Estimated Materials: $2,000 **Standard Annual Maintenance Estimates:** Minimum Maintenance: $3,400 Maximum Maintenance: $6,800

Object	Condition / Treatment Proposal	Conservation Estimate

2024-172-13

Location: Main & Great Mall Parkway
Bust Stop Roof

Adrian Susnea-Litman
Birds of Paradise
2011
Sheet metal, acrylic paint, clear coat

Condition

Overall soil and dust accumulation
Organic debris - concentrated in pockets between the sheet metal and on the roof of the bus stop
Cobwebs
Bird droppings
Coating deterioration - coating is cloudy and soft, no longer bound to the paint even in areas with no blistering
Blistered and delaminated coating - the coating is easily removed with minimal mechanical action
Areas of coating loss
Color shifting in paint - likely due in large part to deterioration of the clear coat

Proposed Treatment

Photodocument before, during and after treatment
Overall surface cleaning with appropriate methods and materials
Reduction of deteriorated coating using appropriate mechanical methods - testing shows that mechanical reduction readily removes the coating and does not damage the underlying paint layer

Minimum: $3,200

Maximum: $6,800

Estimated Materials: $200

Standard Annual Maintenance Estimates:

Minimum Maintenance: $3,200

Maximum Maintenance: $6,800

Object	Condition / Treatment Proposal	Conservation Estimate

2024-172-14

Location: Starlite Park

Laurel True
Starscape Bench
2005 (2007?)
glass tile, ceramic tile, grout, mortar, concrete, steel frame and foam, fiberglass mesh

Condition

Overall soil and dust accumulation
Organic debris
Biogrowth
Graffiti
Many tiles are cracked and chipped, several appear crushes with small fragments in the crushed area
7 clusters of missing round tiles including: red, orange, teal, purple
Several areas of missing glass/mirrored tiles
Large round tiles are 1.5" in diameter
Small round tiles are 0.75" in diameter
Rectangular glass tiles are 2.5-3" long

Proposed Treatment

Photodocument before, during and after treatment
Overall surface cleaning with appropriate methods and materials
Remove graffiti
Reduction of biogrowth using appropriate methods and materials
Source tiles
Replace missing tiles using appropriate methods and materials
Stabilize any cracks in the grout using appropriate methods and materials

Minimum: $8,500

Maximum: $11,900

Estimated Materials: $500

Standard Annual Maintenance Estimates:

Minimum Maintenance: $3,400

Maximum Maintenance: $6,800

Object	Condition / Treatment Proposal	Conservation Estimate

2024-172-15

Location: Rathbone Park

Scott Donahue
Watching You
2015
concrete, mineral paints/colored surface treatment, ceramic ties, fiberglass mesh, steel, plastic, silicone caulk

Condition

Overall soil and dust accumulation
Organic debris and cobwebs, concentrated in recess
Multiple linear cracks in the concrete panels - the different elements feel stable
There is a crack in the wrist of the large mountain lion. The paw feels stable but if the crack grows, the paw could become detached
Chips and small losses in both the tile and concrete elements. An ear is missing from a small mountain lion, revealing the original gray color of the concrete substrate. There is a chip missing from near the hind legs of a deer.
Biogrowth
Bird droppings
Streaking due to water runoff, bird droppings and soil accumulation
Mineral deposits and efflorescence due to water retention and evaporation points in concrete
The silicone caulk is pulling away from the concrete is several areas and should be monitored

Proposed Treatment

Photodocument before, during and after treatment
Overall surface cleaning with appropriate methods and materials
Reduction of biogrowth using appropriate methods and materials
Consolidate and stabilize cracks with injection grout
Fill and inpaint any large cracks, chips and losses in the concrete and tiles with appropriate methods and materials
Refabricate the missing ear from the mountain lion
Inpaint areas of worn and missing mineral paint/colored finish using appropriate methods and materials

Minimum: $8,500

Maximum: $10,200

Estimated Materials: $300

Standard Annual Maintenance Estimates:

Minimum Maintenance: $3,400

Maximum Maintenance: $6,800

2024-172-16

Location: Pinewood Park

Bill Gould
Green Tree
2010
Mild steel, mild steel wire, stainless steel wire, wire crimps, recycled materials

Condition

Overall soil and dust accumulation
Organic debris
Large and heavily soiled cobwebs cover most of the hanging elements

The mild steel components are corroded

The coiled round bar and balls are covered in a dark orange brown layer of ferrous corrosion
There are bird droppings with associated bright orange and yellow ferrous corrosion

The mild steel wires are corroded all the way through and as a result they are very brittle. Approximately 12 connection points between the wire and coiled bar have broken. The corrosion could be exacerbated by the galvanic reaction between the mild steel and stainless steel wires.

The hanging elements are suspended on stainless steel wires which are in good condition
The plastic recycled elements are yellowed, cloudy and brittle with small losses
Some of the glass components are chipped
Approximately 10 of the hanging elements are tangled. Some are horizontal, stuck on several other hanging elements
Approximately 2 hanging elements have fallen off of the sculpture. One is hung on the trunk of the tree

The level of instability in the upper mild steel wires requires attention soon. The brittle wires combined with the flexibility of the sculpture could easily lead to significant losses of the hanging elements in the near future. There is a concern for public safety if the heavier elements fall

Proposed Treatment

Photodocument before, during and after treatment
Overall surface cleaning with appropriate methods and materials
Corrosion reduction using appropriate chemical and/or mechanical methods on the orange ferrous corrosion associated with bird droppings
Restringing in parallel to mild steel wire with a plastic coated wire, following the same zig-zag pattern and threading through the loops of the hanging elements. The plastic coating on the new wire would match the brown color of the mild steel and both would be left in-situ. The intent of the new wire would be to catch the hanging elements as the mild steel wire fails. There is no way to stabilize and reinforce the original mild steel wire that would prevent this eventual structural failure.

Minimum: $24,800
Maximum: $30,600
Estimated Materials: $2,500

Standard Annual Maintenance Estimates:
Minimum Maintenance: $10,200
Maximum Maintenance: $13,600

Object	Condition / Treatment Proposal	Conservation Estimate
	Treatment requires a lift rental.	
2024-172-17 Location: Milpitas Sports Center, Baseball Field backdrop Niles Palmer Baseball Figures 2000? Painted Metal	Condition Overall soil and dust accumulation Organic debris Cobwebs Proposed Treatment Photodocument before, during and after treatment Overall surface cleaning with appropriate methods and materials Treatment requires a lift rental	Minimum: $3,400 Maximum: $6,800 Estimated Materials: $1,500 **Standard Annual Maintenance Estimates:** Minimum Maintenance: $3,400 Maximum Maintenance: $6,800

Object	Condition / Treatment Proposal	Conservation Estimate

2024-172-18

Location: Milpitas Library

Carla Moss
Cartwheels
2004
Bronze

Condition

Overall soil and dust accumulation
Organic debris
Cobwebs
Copper corrosion due to prolonged contact with water, especially seen around the hands of the figures which are in contact with the concrete bases
Bird droppings and associated corrosion
Mineral deposits from nearby sprinklers

On 10/28/24 ACT Art was informed by the city that figure with the pink shirt and socks was vandalized and knocked over, breaking the pin that attached the proper left hand to the concrete base. When the sculpture was assessed, it was determined that the figure with the pink shirt and the figure in the tan shirt shift slightly on their pins when pressure is applied. There was no indication however that the pins were broken or that there was imminent danger of structural failure.

We recommend that the pins/mounting mechanisms be reinforced

Proposed Treatment

Photodocument before, during and after treatment
Overall surface cleaning with appropriate methods and materials
Corrosion reduction using appropriate chemical and/or mechanical methods
Reduction of mineral deposits using appropriate chemical and/or mechanical methods
Hot wax application
Cold wax application

Minimum: $6,800

Maximum: $10,200

Estimated Materials: $200

Standard Annual Maintenance Estimates:

Minimum Maintenance: $3,400

Maximum Maintenance: $6,800

Object	Condition / Treatment Proposal	Conservation Estimate

2024-172-19

Location: Milpitas Library

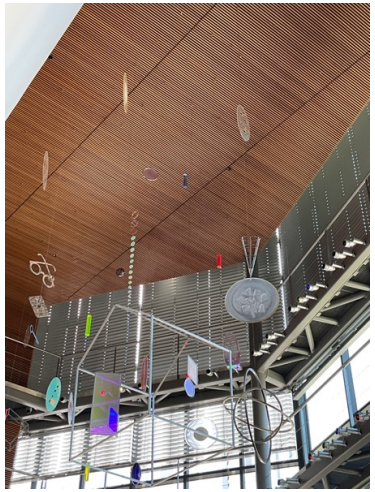

Cork Marcheschi
Fertile Ground
2008
Plastic, dichroic glass, mono filament

Condition

Overall soil, grime and dust accumulation
Fingerprints - likely from initial installation that have accumulated more dust than surrounding surfaces
Cobwebs
One element appears to be missing with only the strand of mono filament remaining

Proposed Treatment

Photodocument before, during and after treatment
Surface vacuum with HEPA vacuum; recto, verso
Overall surface cleaning with appropriate methods and materials

Treatment requires a lift rental

Minimum: $3,400

Maximum: $6,800

Estimated Materials: $1,500

Standard Annual Maintenance Estimates:

Minimum Maintenance: $3,400

Maximum Maintenance: $6,800

Object	Condition / Treatment Proposal	Conservation Estimate

2024-172-20

Location: Hillcrest Park

Shannon Moore-Jervis, Marcia Smith
Hand in Hand Around the Park
2004
Ceramic tile, mortar, grout, steel sheet metal, paint

Condition

Overall soil and dust accumulation
Organic debris
Cobwebs
Biogrowth concentrated in the grout
Ferrous corrosion on the painted steel peak, sphere and ribbon with open worked letters
Pitting
Blistered and delaminated paint
Cracking in paint
Areas of paint loss
Approximately 30 cracks in the ceramic tiles
Approximately 4 missing tiles - 4" curved edge and corner black tiles
Approximately 2 chipped tiles that expose the ceramic substrate

Proposed Treatment

Photodocument before, during and after treatment
Overall surface cleaning with appropriate methods and materials
Removal of deteriorated paint using appropriate chemical and/or mechanical methods
Corrosion reduction using appropriate chemical and/or mechanical methods
Corrosion conversion to reduce the development of ferrous corrosion
Application of black and white direct to metal paint systems to the treated steel

Reduction of biogrowth using appropriate methods and materials
Stabilization of cracks in grout and tile using injection grout

Source tiles
Remove chipped tiles
Replace all missing tiles

Minimum: $8,500

Maximum: $11,900

Estimated Materials: $400

Standard Annual Maintenance Estimates:

Minimum Maintenance: $3,400

Maximum Maintenance: $6,800

2024-172-21

Location: Cardoza Park

Joe Bologna, Patricia Vader
Joe Bologna, Patricia Vader
2015
Aluminum, steel, paint, clear coat

Condition

The kinetic sculpture does still move. There is some wear on the aluminum rod that suspends the soccer ball due to repeated sliding against the inverted arch

Overall soil and dust accumulation
Organic debris
Cobwebs

The clear coat found on the socks, shoes, shorts, circles in the bicycle wheel and on the unpainted aluminum is deteriorated:
Blistered and delaminated coating
Areas of coating loss

The gold paint is deteriorated:
Blistered and delaminated paint
Cracking in paint
Areas of paint loss
It does not appear that the underlying red paint was prepped, causing the gold paint to crack, blister and peel

The red paint on the shorts and shoes is faded, likely due to UV exposure through the clear coat. The areas of red paint that were protected by the overlaid gold paint are much more vibrant and saturated

The gold paint and clear coat on the circles in the bicycle wheel is deteriorated:
The gold paint and the clear coat appear to be incompatible. The clear coat fused to the paint layer but shrunk and discolored over time. The clear coat is insoluble and the exposed gold paint is readily soluble in most solvents

Proposed Treatment

Photodocument before, during and after treatment
Overall surface cleaning with appropriate methods and materials

Reduction of deteriorated clear coat using appropriate chemical and/or mechanical methods

Removal of peeling gold paint from the legs and reapplication of gold paint after proper surface prep of the underlying red paint

Removal of gold paint and cross-linked clear coat on the circles.
Reapplication of gold paint after proper surface prep of the underlying sheet metal
Cold wax application where necessary

Minimum: $10,200

Maximum: $13,600

Estimated Materials: $2,500

Standard Annual Maintenance Estimates:

Minimum Maintenance: $3,400

Maximum Maintenance: $6,800

Treatment requires a lift rental

2024-172-22
Location: Murphy Park

Vickie Jo Sowell
Legends of Milpitas
2003
Painted steel

Condition

Overall soil and dust accumulation
Ferrous corrosion on all elements
Pitting concentrated near seams and the ground on the tower elements. This is likely due to water ingress and retention where steel panels come together and where the steel meets the concrete bases
Blistered and delaminated paint associated with the voluminous ferrous corrosion
Paw prints suggest wildlife interaction that could be exacerbating corrosion and paint loss
The landscaping around the sculptures was soaked during the assessment, suggesting a high moisture level in the steel being maintained by nearby sprinklers
Bird droppings

Proposed Treatment

Photodocument before, during and after treatment

Deinstall top elements to provide access to the inside of the steel towers and allow the tops to be treated in the studio

Overall surface cleaning with appropriate methods and materials
Corrosion reduction using appropriate chemical and/or mechanical methods
Corrosion conversion to reduce the development of ferrous corrosion
Backing, filling, resurfacing, and inpainting areas of loss in the steel
Filling and inpainting areas of paint loss on the top elements

The sprinklers should be relocated away from the artworks. Consider removing all landscaping/plants that require regular watering from the area

The other option is to clean and repair the artworks as much as possible in situ. Without access to the inside of the towers, some of the patches in the steel sheet will not be as robust, however this could option could be a good intermediate choice. A lift would have to be rented in this scenario, increasing the estimated materials cost by $1500-$2500.

Minimum: $18,700
Maximum: $25,500
Estimated Materials: $1,000

Standard Annual Maintenance Estimates:
Minimum Maintenance: $3,400
Maximum Maintenance: $6,800

Object	Condition / Treatment Proposal	Conservation Estimate

2024-172-23

Location: Sunnyhills Albert Augustine Jr. Memorial Park

Dan Snyder
The Sundial
2002
Cement, stainless steel

Condition

Overall soil and dust accumulation
Organic debris
Graffiti
Ferrous corrosion spots on some of the steel elements
Tea staining (overall thin layer of ferrous corrosion) found on some of the steel elements
Ferrous corrosion staining on the adjacent cement in some areas
Minor cracks, chips and losses in the cement
Minor abrasions in the dial

Proposed Treatment

Photodocument before, during and after treatment
Overall surface cleaning with appropriate methods and materials
Corrosion reduction using appropriate chemical and/or mechanical methods
Stain removal from the cement using appropriate methods and materials
Graffiti removal

Minimum: $3,400

Maximum: $6,800

Estimated Materials: $200

Standard Annual Maintenance Estimates:

Minimum Maintenance: $2,000

Maximum Maintenance: $3,400

Object	Condition / Treatment Proposal	Conservation Estimate

2024-172-24

Location: Alviso Adobe Park

Carla Moss
Little Alviso Water Tower
2012
Acrylic panels (likely Plexiglass), printed images, paint, painted steel, roof shingles, pebbles, grout, fiberglass mesh, concrete

Condition

Overall soil and dust accumulation
Organic debris
Cobwebs
Areas of paint loss on the painted metal frame
Cracking in paint
Cracks, chips and losses on 3 plexiglass panels
Most of the panels are warped to varied degrees of severity
Significant fading and color shifting on the printed panels
Biogrowth on the shingles
Approximately 20 black pebbles are missing. Pebbles range in size from 1 - 2"

Proposed Treatment

Photodocument before, during and after treatment
Overall surface cleaning with appropriate methods and materials
Reduction of biogrowth using appropriate methods and materials
Touch-in any missing black paint
Replace the three damaged plexiglass panels
Have the discolored printed panels reprinted and installed
Source black pebbles
Replace the missing black pebbles

Minimum: $5,000

Maximum: $6,000

Estimated Materials: $200

Standard Annual Maintenance Estimates:

Minimum Maintenance: $2,000

Maximum Maintenance: $3,400

Object	Condition / Treatment Proposal	Conservation Estimate

2024-172-25

Location: Alviso Adobe Park

Adrian Susnea-Litman
Old Farm Wagon
2012
wood, steel, copper sheeting, paint

Condition

Overall soil and dust accumulation
Organic debris
Cobwebs
Liquid deposits and staining, likely from surrounding trees
Blue/green copper corrosion
Significant fading and wear on the paint overall. Brown top coat appears to be missing from much of the wagon, revealing the underlying green layer
Evidence of pest activity including hollow boards, tunneling, holes and large losses in some boards
Three of the wheels are partially sunk into the mulch
There are holes in the ground surrounding the concrete pad, likely from rodent activity
The concrete pad is partially sunken into the mulch in some areas
One steel railing on the proper right side of the platform is loose

Proposed Treatment

Photodocument before, during and after treatment
Overall surface cleaning with appropriate methods and materials
Corrosion reduction using appropriate chemical and/or mechanical methods
Cold wax application to metal components
Fill loss in wood platform with appropriate materials
Inpaint fills
Realign and secure the unstable railing
Lift the wagon and place stone or concrete pavers under each of the wheels and at the end of the tow bar

After thorough cleaning, assess full extent of paint loss and consider future plans to repaint or inpaint and clear coat or inpaint and wax

Minimum: $5,400

Maximum: $6,800

Estimated Materials: $300

Standard Annual Maintenance Estimates:

Minimum Maintenance: $3,400

Maximum Maintenance: $6,800

Object	Condition / Treatment Proposal	Conservation Estimate

2024-172-26

Location: Portable

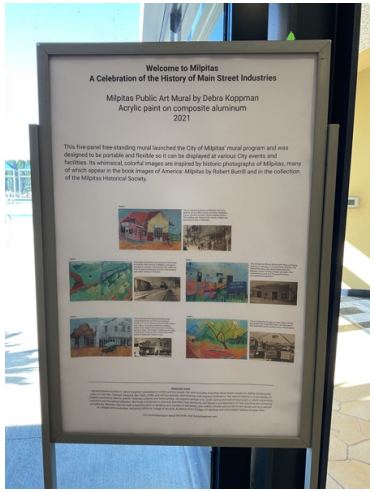

Debbie Koppman
Welcome to Milpitas
2021
Acrylic on panel, aluminum stands/frames

Condition

Overall soil and dust accumulation
Abrasions and losses to the paint, likely due to movement from site to site and from people walking by.
Fly spots/insect droppings

Proposed Treatment

Photodocument before, during and after treatment
Surface vacuum with HEPA vacuum; recto, verso
Surface clean with dry eraser method / soot sponge / soft cloth
Surface clean with AC3%
Inpaint areas of paint loss

*We recommend putting Plexiglas in front of each of the painting to prevent future scratches and abrasions

Minimum: $12,000
Maximum: $16,000
Estimated Materials: $150

Standard Annual Maintenance Estimates:
Minimum Maintenance: $8,000
Maximum Maintenance: $12,000

AUTHORIZATION
The undersigned authorizes Alexandra Thrapp and her studio (hereinafter collectively referred to as "The Studio") to proceed with proposed minimum treatment of the object identified above (hereinafter referred to as 'the object" as described in this report, subject to the conditions listed in the terms and conditions.

AUTHORIZED BY:

DATE:

Please sign and date above and initial and date below

Total Estimate Minimum $176,350
Total Estimate Maximum $254,000
Estimated Materials: $18,200

Estimate Annual Maintenance
Minimum $81,250
Maximum $145,050
Estimated Materials: $18,200

Job Number		Job Status	ReportDate	Client Name	ObjectArtist	Title	Location	Treatment Work Hours	Treatment Minimum Maximum	Maintenance Work Hours	Maintenance Minimum Maximum	Materials
2024-172-1		☐	10/29/2024	Anna Talarico	James Dinh	Circle of Time	Jose Higuera Park	4 - 6	$1,000 $1,500	4 - 6	$1,000 $1,500	$150
2024-172-2		☐	10/29/2024	Anna Talarico	Carla Moss	Flute Player	Civic Center Plaza	24 - 32	$5,400 $6,800	16 - 24	$3,400 $5,100	$300
2024-172-3		☐	10/29/2024	Anna Talarico	MaryAnn Baker	Cameo Bench	Barbara Lee Senior Center	32 - 48	$6,800 $10,200	16 - 16	$3,400 $3,400	$500
2024-172-4		☐	10/29/2024	Anna Talarico	MaryAnn Baker	Happy Hats Bench	Senior Center Patio	16 - 32	$3,400 $6,800	8 - 16	$1,700 $3,400	$500
2024-172-5		☐	10/29/2024	Anna Talarico	MaryAnn Baker	Tulips Bench	Senior Center Patio	16 - 32	$3,400 $6,800	8 - 16	$1,700 $3,400	$500
2024-172-6		☐	10/30/2024	Anna Talarico	MaryAnn Baker	Let's Dance Bench	Cesar Chavez Plaza, Barbara Lee Senior Center	32 - 48	$6,800 $10,200	8 - 16	$1,700 $3,400	$500
2024-172-7		☐	10/30/2024	Anna Talarico	MaryAnn Baker	Veterans Memorial Bench	Civic Center Plaza	32 - 48	$6,800 $10,200	8 - 16	$1,700 $3,400	$300
2024-172-8		☐	10/30/2024	Anna Talarico	Adrian Susnea-Litman	Four Seasons	Hallway wall, Barbara Lee Senior Center	8 - 16	$2,000 $4,000	4 - 8	$1,000 $2,000	$200
2024-172-9		☐	10/30/2024	Anna Talarico	Adrian Susnea-Litman	Garden Fantasy	Lobby, Barbara Lee Senior Center	8 - 16	$2,000 $4,000	8 - 16	$2,000 $4,000	$200
2024-172-10		☐	10/30/2024	Anna Talarico	Joanie Popeo	Our View	Barbara Lee Senior Center	3 - 4	$750 $1,000	1 - 1	$250 $250	$100
2024-172-11		☐	10/30/2024	Anna Talarico	Adrian Susnea-Litman	Thriving Legacy	Barbara Lee Senior Center	24 - 36	$6,000 $9,000	16 - 32	$4,000 $8,000	$1,500
2024-172-12		☐	10/30/2024	Anna Talarico	David Alan Clark	Minute Man	Milpitas City Hall	48 - 64	$10,200 $13,600	16 - 32	$3,400 $6,800	$2,000
2024-172-13		☐	10/30/2024	Anna Talarico	Adrian Susnea-Litman	Birds of Paradise	Main & Great Mall Parkway Bust Stop Roof	16 - 32	$3,200 $6,800	16 - 32	$3,200 $6,800	$200
2024-172-14		☐	10/30/2024	Anna Talarico	Laurel True	Starscape Bench	Starlite Park	40 - 56	$8,500 $11,900	16 - 32	$3,400 $6,800	$500
2024-172-15		☐	10/30/2024	Anna Talarico	Scott Donahue	Watching You	Rathbone Park	40 - 48	$8,500 $10,200	16 - 32	$3,400 $6,800	$300
2024-172-16		☐	10/30/2024	Anna Talarico	Bill Gould	Green Tree	Pinewood Park	? - 144	$24,800 $30,600	48 - 64	$10,200 $13,600	$2,500
2024-172-17		☐	10/30/2024	Anna Talarico	Niles Palmer	Baseball Figures	Milpitas Sports Center, Baseball Field backdrop	16 - 32	$3,400 $6,800	16 - 32	$3,400 $6,800	$1,500
2024-172-18		☐	10/30/2024	Anna Talarico	Carla Moss	Cartwheels	Milpitas Library	32 - 48	$6,800 $10,200	16 - 32	$3,400 $6,800	$200

Job Number		Job Status	ReportDate	Client Name	ObjectArtist	Title	Location	Treatment Work Hours	Treatment Minimum Maximum	Maintenance Work Hours	Maintenance Minimum Maximum	Materials
2024-172-19		☐	10/31/2024	Anna Talarico	Cork Marcheschi	Fertile Ground	Milpitas Library	16 - 32	$3,400 $6,800	16 - 32	$3,400 $6,800	$1,500
2024-172-20		☐	10/31/2024	Anna Talarico	Shannon Moore-Jervis, Marcia Smith	Hand in Hand Around the Park	Hillcrest Park	40 - 56	$8,500 $11,900	16 - 32	$3,400 $6,800	$400
2024-172-21		☐	10/31/2024	Anna Talarico	Joe Bologna, Patricia Vader	Kicker Kid	Cardoza Park	48 - 64	$10,200 $13,600	16 - 32	$3,400 $6,800	$2,500
2024-172-22		☐	10/31/2024	Anna Talarico	Vickie Jo Sowell	Legends of Milpitas	Murphy Park	88 - 120	$18,700 $25,500	16 - 32	$3,400 $6,800	$3,000
2024-172-23		☐	10/31/2024	Anna Talarico	Dan Snyder	The Sundial	Sunnyhills Albert Augustine Jr. Memorial Park	16 - 32	$3,400 $6,800	8 - 16	$2,000 $3,400	$200
2024-172-24		☐	10/31/2024	Anna Talarico	Carla Moss	Little Alviso Water Tower	Alviso Adobe Park	20 - 24	$5,000 $6,000	8 - 16	$2,000 $3,400	$200
2024-172-25		☐	10/31/2024	Anna Talarico	Adrian Susnea-Litman	Old Farm Wagon	Alviso Adobe Park	24 - 32	$5,400 $6,800	16 - 32	$3,400 $6,800	$150
2024-172-26		☐	10/31/2024	Anna Talarico	Debbie Koppman	Welcome to Milpitas	Portable	48 - 64	$12,000 $16,000	32 - 48	$8,000 $12,000	$150

ACT Art Conservation
Fine Art Conservation

December 12, 2024

Anna Talarico
Designing Local
20 E Broad St. suite 1010,
Columbus, OH 43215

Dear Anna,

The following table ranks the 26 artworks in the Public Art Collection of the City of Milpitas.

Each artwork is given a number from 1 through 26, with 1 being the highest priority and 26 being the least.

Each artwork is also placed in one of four categories: Public Safety Concern, Active Structural Condition Issue, Active Condition Issue, Requires Maintenance. Below are the definitions of each of these categories.

Public Safety Concern:

- These artworks pose a potential threat to public safety due to their condition issues. These threats include the potential for falling elements as well as sharp and broken components in areas where the public is intended to interact with a piece.

Active Structural Condition Issue:

- These artworks have actively developing condition issues that are already compromising the structural integrity of the artwork.

Active Condition Issue:

- These artworks have active condition issues that will continue to develop without intervention.

Requires Maintenance:

- These artworks are in stable condition but are soiled or have minor damages that should be treated in order to reduce the risk of more severe condition issues due to weather and/or interaction with the public.

Sincerely,

Emily K. Rezes

Emily Rezes
Senior Objects Conservator
ACT Art Conservation LLC
objects@actartconservation.com

Primary Image	Condition Priority #	Priority Level	Priority Rationale	JobNum	ObjectArtist	Title	Materials Cost Estimate	Estimate Min Hrs	Estimate Max Hrs	Min Estimate	Max Estimate	Projected Maintenance Min Hrs	Projected Maintenance Max Hrs	Min Maintenance	Max Maintenance	Location
	1	Public Safety Concern	Public safety concern for falling glass elements; Signs of active deterioration with broken, fallen and missing elements; High traffic area in a park ie. people picnicing nearyby during assessment	2024-172-16	Bill Gould	Green Tree	$2,500.00	112	144	$24,800.00	$30,600.00	48	64	$10,200.00	$13,600.00	Pinewood Park
	2	Public Safety Concern	Public safety concern for stability of heavy bronze sculptures on their mounts; Recent vandalism shows how they can be damaged by human force; High traffic area in front of the library; Copper corrosion due to prolonged exposure to water on the ground; Untreated corrosion can lead to structural instability	2024-172-18	Carla Moss	Cartwheels	$200.00	32	48	$6,800.00	$10,200.00	16	32	$3,400.00	$6,800.00	Milpitas Library
	3	Public Safety Concern	Public safety concern of sharp broken tiles and exposed concrete and substructure on the seat of the bench; Tile loss; Potential for water ingress where there are cracks; Heavy ferrous corrosion on painted steel elements	2024-172-20	Shannon Moore-Jervis, Marcia Smith	Hand in Hand Around the Park	$400.00	40	56	$8,500.00	$11,900.00	16	32	$3,400.00	$6,800.00	Hillcrest Park
	4	Public Safety Concern	Public safety concern of falling acrylic elements - two elements appear to have already fallen based off of dangling monofilament with no pieces on the ends; Complete stability assessment and reinforcement where possible would be competed during cleaning	2024-172-19	Cork Marcheschi	Fertile Ground	$1,500.00	16	32	$3,400.00	$6,800.00	16	32	$3,400.00	$6,800.00	Milpitas Library
	5	Public Safety Concern	Public safety concern of sharp broken glass tiles and exposed concrete and substructure on the seat of the bench; Tile loss; Potential for water ingress where there are cracks	2024-172-14	Laurel True	Starscape Bench	$500.00	40	56	$8,500.00	$11,900.00	16	32	$3,400.00	$6,800.00	Starlite Park
	6	Active Structural Condtion Issue	Structural condition concern of the corroded and delaminated painted steel towers; Could become structurally unsound and unfit to support the weight of the narrative finials; Heavy corrosion and paint loss on the finials reduces legibility	2024-172-22	Vickie Jo Sowell	Legends of Milpitas	$3,000.00	88	120	$18,700.00	$25,500.00	16	32	$3,400.00	$6,800.00	Murphy Park
	7	Active Structural Condtion Issue	Structural condtion concern of hairline cracks on concrete and some losses to sculptural elements; Cracks have the potential to grow and cause losses if left on untreated, especially over freeze/thaw cycles	2024-172-15	Scott Donahue	Watching You	$300.00	40	48	$8,500.00	$10,200.00	16	32	$3,400.00	$6,800.00	Rathbone Park
	8	Active Structural Condtion Issue	Structural condition concern in the wood due to water exposure and pests; Soft ground support is causing condition issues on the wheels; condition issues will be exacerbated if not treated	2024-172-25	Adrian Susnea-Litman	Old Farm Wagon	$150.00	24	32	$5,400.00	$6,800.00	16	32	$3,400.00	$6,800.00	Alviso Adobe Park
	9	Active Condition Issue	Copper and ferrous corrosion will be exacerbated by water from the fountain if the bronze is not treated; Untreated corrosion can lead to structural instability	2024-172-2	Carla Moss	Flute Player	$300.00	24	32	$5,400.00	$6,800.00	16	24	$3,400.00	$5,100.00	Civic Center Plaza
	10	Active Condition Issue	Heavy copper corrosion due to prolonged exposure to water on the ground; Untreated corrosion can lead to structural instability	2024-172-6	MaryAnn Baker	Let's Dance Bench	$500.00	32	48	$6,800.00	$10,200.00	8	16	$1,700.00	$3,400.00	Cesar Chavez Plaza, Barbara Lee Senior Center
	11	Active Condition Issue	Copper corrosion due to prolonged exposure to water on the ground; Untreated corrosion can lead to structural instability; Gaps in the acrylic coating lead to preferential corrosion of the bronze; Could cause further corrosion and patina shifts if left untreated; Gold acrylic paint on frames is very unstable and is at risk of further loss	2024-172-3	MaryAnn Baker	Cameo Bench	$500.00	32	48	$6,800.00	$10,200.00	16	16	$3,400.00	$3,400.00	Barbara Lee Senior Center
	12	Active Condition Issue	Copper corrosion due to prolonged exposure to water on the ground; Untreated corrosion can lead to structural instability	2024-172-4	MaryAnn Baker	Happy Hats Bench	$500.00	16	32	$3,400.00	$6,800.00	8	16	$1,700.00	$3,400.00	Senior Center Patio
	13	Active Condition Issue	Copper corrosion due to prolonged exposure to water on the ground; Untreated corrosion can lead to structural instability	2024-172-5	MaryAnn Baker	Tulips Bench	$500.00	16	32	$3,400.00	$6,800.00	8	16	$1,700.00	$3,400.00	Senior Center Patio
	14	Active Condition Issue	Copper corrosion due to prolonged exposure to water on horizontal surfaces, bird droppings and acidic organic matter; Untreated corrosion can lead to structural instability	2024-172-12	David Alan Clark	Minute Man	$2,000.00	48	64	$10,200.00	$13,600.00	16	32	$3,400.00	$6,800.00	Milpitas City Hall
	15	Active Condition Issue	Gaps in the acyrlic coating lead to preferential corrosion of the bronze; Could cause further corrosion and patina shifts if left untreated	2024-172-7	MaryAnn Baker	Veterans Memorial Bench	$300.00	32	48	$6,800.00	$10,200.00	8	16	$1,700.00	$3,400.00	Civic Center Plaza

Primary Image	Condition Priority #	Priority Level	Priority Rationale	JobNum	ObjectArtist	Title	Materials Cost Estimate	Estimate Min Hrs	Estimate Max Hrs	Min Estimate	Max Estimate	Projected Maintenance Min Hrs	Projected Maintenance Max Hrs	Min Maintenance	Max Maintenance	Location
	16	Active Condition Issue	Deterioration of the acrylic coating causing overall discoloration; Discoloration will continue with UV and weather exposure; Heavy oraganic deposits could lead to corrosion and pest infestation	2024-172-13	Adrian Susnea-Litman	Birds of Paradise	$200.00	16	32	$3,200.00	$6,800.00	16	32	$3,200.00	$6,800.00	Main & Great Mall Parkway Bust Stop Roof
	17	Active Condition Issue	Deterioration, blistering, peeling and signficant loss to paint layers; Deterioration will continue with UV and weather exposure	2024-172-21	Joe Bologna, Patricia Vader	Kicker Kid	$2,500.00	48	64	$10,200.00	$13,600.00	16	32	$3,400.00	$6,800.00	Cardoza Park
	18	Active Condition Issue	Discoloration, scratches and loss to the protective acrylic panels; Deterioration will continue with UV and weather exposure	2024-172-24	Carla Moss	Little Alviso Water Tower	$200.00	20	24	$5,000.00	$6,000.00	8	16	$2,000.00	$3,400.00	Alviso Adobe Park
	19	Active Condition Issue	Ferrous corrorsion on stainless steel elements; Cracking and minor losses in concrete; Condition issues will continue to develop with weather exposure	2024-172-23	Dan Snyder	The Sundial	$200.00	16	32	$3,400.00	$6,800.00	8	16	$2,000.00	$3,400.00	Sunnyhills Albert Augustine Jr. Memorial Park
	20	Requires Maintenance	Overall soiling and organic debris accumulation; soil and debris will continue to accumulate; full assessment of substrate condition would be completed during cleaning	2024-172-17	Niles Palmer	Baseball Figures	$1,500.00	16	32	$3,400.00	$6,800.00	16	32	$3,400.00	$6,800.00	Milpitas Sports Center, Baseball Field backdrop
	21	Requires Maintenance	New installation with minor soiling and bird droppings; It's important to begin maintenance early to avioid larger condition issues down the road	2024-172-1	James Dinh	Circle of Time	$150.00	4	6	$1,000.00	$1,500.00	4	6	$1,000.00	$1,500.00	Jose Higuera Park
	22	Requires Maintenance	Scratches, abrasions, paint loss. More scratches and losses could develop due to interactions with the public but indoor location protects it from the elements	2024-172-26	Debbie Koppman	Welcome to Milpitas	$150.00	48	64	$12,000.00	$16,000.00	32	48	$8,000.00	$12,000.00	Portable
	23	Requires Maintenance	Scuffs and minor abrasions. More scuffs could develop due to interactions with the public but indoor location protects it from the elements	2024-172-8	Adrian Susnea-Litman	Four Seasons	$200.00	8	16	$2,000.00	$4,000.00	4	8	$1,000.00	$2,000.00	Hallway wall, Barbara Lee Senior Center
	24	Requires Maintenance	Minor chips and losses and overall soiling; More losses could develop due to interactions with the public, and dust and grime will continue to accumulate, but indoor location protects it from the elements	2024-172-9	Adrian Susnea-Litman	Garden Fantasy	$200.00	8	16	$2,000.00	$4,000.00	8	16	$2,000.00	$4,000.00	Lobby, Barbara Lee Senior Center
	25	Requires Maintenance	Minor scuffs on the glazing; More scuffs could develop due to interactions with the public but indoor location protects it from the elements	2024-172-10	Joanie Popeo	Our View	$100.00	3	4	$750.00	$1,000.00	1	1	$250.00	$250.00	Barbara Lee Senior Center
	26	Requires Maintenance	Overall dust accumulation and soiling; Dust and grime will continue to accumulate, but indoor location protects it from major weather impacts	2024-172-11	Adrian Susnea-Litman	Thriving Legacy	$1,500.00	24	36	$6,000.00	$9,000.00	16	32	$4,000.00	$8,000.00	Barbara Lee Senior Center

Appraisal Report

Appraisal Reference Number 032032

Type of Value	**Replacement Value - New**
Intended Use	**Insurance Coverage**
Subject Property	A collection of public artworks

Client

City of Milpitas

C/O Ms. Anna Talarico
Designing Local
20 E. Broad Street
Columbus, OH 43215

Effective Date	October 31, 2024
Date of Examination	October 29-31, 2024
Report Date	March 5, 2025

Appraised by: Liza Hickey, ASA
Roth Art Group
P.O. Box 545
Lafayette, CA 94549

TABLE OF CONTENTS

Title Page 1

Table of Contents 2

Transmittal Letter 3

Subject Property Summary List 5

Terms and Notes 8

Approaches to Value 9

Limiting Conditions and Liabilities 10

Privacy Policy Notification 13

Item Description 14

Condition Ranking 40

State of the Market 41

Valuation Analysis 42

Certifications 44

Works and Authorities Consulted 46

Appraisers Credentials 48

Glossary of Terms 53

March 5, 2025
Re: Appraisal No. 032032

City of Milpitas
C/O Ms. Anna Talarico
Designing Local
20 E. Broad Street
Columbus, OH 43215

Dear Ms. Talarico:

APPRAISAL REPORT FOR REPLACEMENT VALUE - NEW

We have prepared an appraisal report for a collection of public artworks in order to determine Replacement Value - New for Insurance Coverage as of the effective date of October 31, 2024. The conclusion of Replacement Value - New is $1,445,800.

This report is intended for use in Insurance Coverage only and not for any other use. The definition of Replacement Value - New is the cost to replace a property with an equivalent, or substitute which is new, using modern materials, techniques and standards that satisfy the description or use of the replaced property. It is the present cost of replacing the property with one having the same quality and utility, but in new condition.

This report is intended for use only by you and the relevant representatives of the City of Milpitas, as well as their designated insurance agent or broker. Use of this report by others is not intended by the appraiser. You have declared that the City of Milpitas is the owner of the subject property listed below and that all items are located at public locations throughout the city. We did not conduct any further research on ownership rights of the subject property.

In order to conclude our assignment, the scope of work in this appraisal report included relying on condition reports provided by ACT Conservation. ACT provided identification information, condition assessment, high resolution photographs, in some cases, measurements of the subject properties. As the artworks are custom, site-specific pieces, we determined that the most relevant market in which to replace the subject properties is through the artists' studios. We gathered current pricing information to re-create the works from the artists, or pricing for new comparable pieces by artists of similar stature and reputation in cases where the original artist was unavailable for comment. The detailed results of this analysis are presented in the Item Description and Valuation Analysis portions of the appraisal report.

The subject property was examined by ACT on October 29-31, 2024. In preparing this appraisal, we considered various characteristics of value based on our expertise including but not limited to

the recognition of the artist and his/her position in the current art market, the subject matter, its rarity, the condition of the property, size, age and provenance.

I certify that I have no present or contemplated future interest in the subject property which might prevent me from making a fair and unbiased appraisal. The compensation to Roth Art Group is not based on a percentage of the appraised value of the subject property.

The appraisal report contains 53 pages and all components must be present for the report to be valid. Any item missing from this report renders it invalid. The report was prepared for intended use in Insurance Coverage and reflects the Replacement Value - New. It is valid only when used for this use and only when used in its entirety. Should you need an appraisal of the subject properties for a different intended use, a new appraisal with a new value conclusion would be required, and this would constitute a new assignment.

This appraisal report conforms to the 2024 edition of the *Uniform Standards of Professional Appraisal Practice* of the Appraisal Foundation and the Code of Ethics of the American Society of Appraisers, an organization dedicated to promoting high standards of the practice within the appraisal profession.

Submission of this report concludes the appraisal assignment. Please review this report carefully. If you have any further questions, or if I can be of further assistance to you, do not hesitate to call us. It has been our pleasure to work with you on this project.

Sincerely,

Liza Hickey, ASA

Roth Art Group
EIN: 20-2794654

Item #	Artist	Title	Medium / Materials	Value
1	Mary Ann Baker	*Generations Bench*	Bronze, exterior grade acrylic	$30,000
2	Mary Ann Baker	*Happy Hats Bench*	Bronze, exterior grade acrylic	$15,000
3	Mary Ann Baker	*Tulips Bench*	Bronze, exterior grade acrylic	$15,000
4	Mary Ann Baker	*Let's Dance Bench*	Bronze, exterior grade acrylic paint	$15,000
5	Mary Ann Baker	*Veterans Memorial Bench*	Bronze, wood	$8,000
6	Joe Bologna and Patricia Vader	*Kicker Kid*	Aluminum, steel, and paint	$30,000
7	David Alan Clark	*Milpitas Minute Man*	Bronze	$278,000
8	James Dinh	*Circle of Time*	Granite, concrete, paint	$45,000
9	Scott Donahue	*Watching You*	Concrete, ceramic tile, paint	$100,000
10	Bill Gould	*Green Tree*	Steel, recycled materials	$100,000
11	Debra Koppman	*Welcome to Milpitas*	Acrylic paint on composite aluminum	$10,000
12	Cork Marcheschi	*Fertile Ground*	Plastic, dichroic glass, monofilament	$140,000
13	Shannon Moore and Marcia Smith	*Hand in Hand around the Park*	Ceramic mosaic tile, steel, paint	$50,000

Item #	Artist	Title	Medium / Materials	Value
14	Carla Moss	*Flute Player*	Bronze	$30,000
15	Carla Moss	*Cartwheels*	Bronze	$60,000
16	Carla Moss	*Little Alviso Water Tower*	Acrylic panels, mixed media	$40,000
17	Niles Palmer	*Baseball Figures*	Painted metal	$75,000
18	Joanie Popeo	*Our View*	Pastel	$12,000
19	Dan Snyder	*The Sundial*	Cement, stainless steel	$100,000
20	Vickie Jo Sowell	*Legends of Milpitas*	Painted steel	$45,000
21	Adrian Susnea Litman	*Old Farm Wagon*	Wood, steel, copper sheeting, paint	$52,000
22	Adrian Susnea-Litman	*Four Seasons*	sheet metal, metal wire, paint	$40,000
23	Adrian Susnea-Litman	*Garden Fantasy*	Ceramic tile	$30,000
24	Adrian Susnea-LItman	*Thriving Legacy*	acrylic on wood panel	$68,800
25	Adrian Susnea-Litman	*Birds of Paradise*	Sheet metal, acrylic paint	$32,000
26	Laurel True	*Starscape Bench*	Glass and ceramic mosaic tile, concrete	$25,000

Item #	Artist	Title	Medium / Materials	Value

Total Replacement Value - New: $1,445,800

Notes and Terms for the Appraisal

Type of Value:
The type of value used in this appraisal document is Replacement Value - New.

Intended Use:
This report is intended only for use in Insurance Coverage. This report is not intended for any other use.

Intended Users:

This report is intended for use by Anna Talarico of Designing Local, relevant representatives of the City of Milpitas, as well as their designated insurance agent or broker. Use of this report by others is not intended by the appraiser.

Definition of Replacement Value - New:

Replacement Value-new is the cost to replace a property with an equivalent, or substitute which is new, using modern materials, techniques and standards that satisfy the description or use of the replaced property. It is the present cost of replacing the property with one having the same quality and utility, but in new condition.

Source: American Society of Appraisers. *Monograph 2: Types of Value for Varied Intended Uses,* 2012. p. 2-10.

Approaches To Value

The following three approaches to value have been considered in estimating value for the subject property.

Sales Comparison Approach to Value:
A procedure to conclude an opinion of value for a property by comparing it with similar properties that have been sold or are for sale in the relevant marketplace by making adjustments to prices based on marketplace conditions and the properties' characteristics of value. The sales comparison approach was used for analysis in this appraisal because there are a sufficient number of properties in the relevant marketplace comparable to the subject properties on which to base a credible value conclusion.

Alternative Methodologies Considered:

Cost Approach to Value:
A procedure to estimate the current costs to reproduce or create a property with another of comparable use and marketability. This approach to value was considered; however, the age, maker, and history of the properties in this appraisal contribute to value. Currently produced reproduction properties are not therefore comparable to the subject properties. This approach to value was therefore not used for analysis in this appraisal.

Income Approach to Value:
A procedure to conclude an opinion of present value by calculating the anticipated monetary benefits (such as a stream of income) for an income-producing property. This approach is not relevant in this case since income from the subject property is not contemplated at this time.

(Source for definitions: Personal Property Committee of the American Society of Appraisers, Approaches to Value, last modified March 3, 2011, http://appraisers.org/PPHome/PPHome.aspx.)

Limiting Conditions and Liabilities

This document is limited by those conditions that are implicit in the document's Transmittal Letter.

The type of value of the enclosed appraisal report is Replacement Value - New for the intended use of Insurance Coverage. It is to be used for this specific purpose only.

The opinions of values expressed in this report are the direct result of data and materials researched, organized, and analyzed by the appraisers. The data was obtained from appropriate and reliable sources as stated in the "Works Consulted" section of the report. Provenance information and purchase receipts were provided, either verbally or through direct examination, to the appraisers by the client. The appraisers have relied on information supplied to them by the client, concerning undisputed title to the objects, acquisition history, purchase price, et al. The client, in accepting this report, acknowledges that the information supplied by him/her has been accurately transcribed and utilized by the appraisers. The client, in accepting this report, also acknowledges that no significant information has been withheld from the appraisers which may have caused the appraiser to arrive at a valuation conclusion different from the one(s) stated in this report, had such information been known at the time of the report's preparation.

The enclosed valuations do not represent the net resale value of the works of art. Definitions of Replacement Value - New, Valuation Approach, and other terms required to be used in this type of report are contained in the body of the report. No opinion is expressed on past or future value of the appraised items.

Roth Art Group assumes no responsibility for changes in market conditions or the inability to locate a potential replacement item for a potential buyer for the items appraised.

The objective of an appraiser is to estimate values for a specific purpose. Appraisers are not authenticators; however, every effort has been made to properly identify the items listed herein by means of reviewing client paperwork and invoices to learn where each item was purchased; and by referencing catalogues raisonné, standard industry source books, auction catalogues, exhibition catalogues, and artist's monographs. Wherever possible, catalogue raisonné numbers are cited in the Item Description section of the report. This is done to facilitate identification and indicate where further information on the work is available. Roth Art Group cannot be held accountable if a work listed in this appraisal report is not deemed authentic at a future date. The appraisers have based descriptions of the appraised objects on their professional experience as appraisers in the fields of fine and decorative arts, and on the information supplied by third parties who are named in the report, where appropriate. Consequently, the appraisers believe that the descriptions of the appraised objects are accurate and correct. However, additional research by scholars in the field, at some point in the future, may cause the appraisers to alter their assessment of the objects described in the report. While every effort has been made by the appraisers to ascertain the accuracy of descriptions of the appraised object(s) and their attribution, this report is not intended to serve as a certificate of authenticity

or warranty.

Since condition is an important factor in estimating value, each item was personally inspected by ACT Art Conservation (exceptions are noted). No chemical analysis or black light inspection was made of the subject works; therefore, only condition problems that are easily seen could be noted. Roth Art Group is not responsible for noting prior restorations and damage if not apparent or not disclosed by the client.

The client claimed ownership of the properties appraised. The values estimated in the report are based upon the assumption that the client is entitled to the rights and benefits of 100% ownership of the properties, and that the properties are unencumbered by any notes or partial ownerships. However, the appraiser makes no certification to legal title concerning the items appraised in this report.

This report must be used in its entirety. Neither all nor any part of the contents of this report (especially the conclusions as to the value or the identity of the appraiser) shall be reproduced or disseminated to the public through advertising, public relations, news, sales, or other media without the prior written consent and approval of the appraiser.

Measurements are considered approximations. Values provided represent values of the works unframed.

Photographs are taken as simple visual record and are not considered professional photographs.

When appropriate, consultants have been chosen for their specialized expertise and are assumed to be reliable. However, no responsibility is taken for the accuracy of their opinions.

Paintings were not removed from frames. No responsibility will be taken for information gleaned by removal of a work from a frame and any correlated adjustment to monetary value

Items are assumed to be in good condition unless otherwise mentioned.

The appraisers have not been disqualified by the IRS.

The completion and acceptance of this report finalizes the obligation of Roth Art Group as outlined in the scope of the assignment. Any future work related to this assignment will require additional fees if such services are requested.

Roth Art Group shall be held harmless from and against any actions, claims, liabilities or expenses incurred as a result of claims based on or arising from the appraisal by third parties unrelated to the immediate purpose of this appraisal.

Any dispute between the client and appraiser concerning this report which cannot be settled between the two parties will be referred to a neutral third-party mediation service. The cost of

such mediation shall be borne equally by both parties. In the event mediation is not successful, the parties will agree to submit the dispute to binding arbitration under the laws of the State of California.

PRIVACY POLICY NOTIFICATION

Roth Art Group is committed to safeguarding the confidential information of our clients. We hold all of our clients' personal information provided to our appraisal service company in the strictest confidence and in accordance with the *Uniform Standards of Professional Appraisal Practice* (USPAP) and American Society of Appraisers (ASA) Code of Ethics and standards of confidentiality. Our files include information collected from clients in connection with the personal property appraisal services provided by our company. At no time in the past have we ever disclosed information to third parties, except as specifically authorized by our clients, or as required by law, and we do not anticipate doing so in the future. We are prohibited under federal law from changing our policy without first advising a client and obtaining permission. We use the personal property information provided by our clients to help meet their appraisal requests, while guarding against any real or perceived infringements of their rights of privacy.

Our policy with respect to personal information about our clients is as follows:

- We limit employee and agent access to information only to those who have a business or professional reason to know, and only to nonaffiliated parties as required by law.

- We maintain a secure office and computer environment to ensure that your information is not placed at unreasonable risk.

- The categories on non-public personal information that we collect from a client depend upon the scope of the client's appraisal engagement. This includes information about personal property assets, information about tax identification numbers, and other non-public information necessary. Additionally, it may include information about transactions between clients and third parties, and information from third party sources.

- Unaffiliated third parties that require access to our clients' personal information, such as Federal and State tax regulators, insurance companies, and the like, may only review company records as permitted by law.

- We do not provide client information to mailing list vendors or solicitors for any reason whatsoever.

- Personally identifiable information will be maintained during the time a client is a client of the company and for the appropriate time thereafter that such records are required to be maintained by USPAP, and consistent with the ASA ethics code. After this required period of record retention, all such information will be destroyed in a manner consistent with providing confidentiality to our clients.

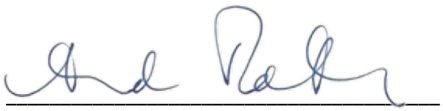

3/5/2025

Andrea Z. Roth, Ph.D., ASA
ROTH ART GROUP

ITEM DESCRIPTIONS

Item Number **1**

Object Type **Sculpture**

MARY ANN BAKER

Title *Generations Bench*

Date 2009

Medium Bronze, exterior grade acrylic

Dimensions 80 x 84 inches

Condition Assumed fair; overall soil and dust accumulation, corrosion, coating deterioration

Location Barbara Lee Senior Center

Description A curving, serpentine bench with pierced back composed of cameo depictions of various figures in historical dress, continuing to a slatted seat supported on ten legs joined by arched X-form stretchers, connected on the side to a tall tree issuing multiple branches sprouting green leaves and red apples

Replacement Value - New	**$30,000**

ITEM DESCRIPTIONS

Item Number **2**

Object Type **Sculpture**

MARY ANN BAKER

Title *Happy Hats Bench*

Date 2009

Medium Bronze, exterior grade acrylic

Dimensions 40 x 60 x 20 inches

Condition Assumed Fair; overall soil and dust accumulation, corrosion

Marks/Inscriptions Stamped on back "09 MABaker"

Location Senior Center Patio

Description The bench with pierced colorful back composed of an assortment of hats continuing to slatted seat, with rose blosom cut-outs, flanked by branch form armrests and supported by eight branch form legs joined by arched stretchers

Replacement Value - New	**$15,000**

ITEM DESCRIPTIONS

Item Number **3** **Object Type** **Sculpture**

MARY ANN BAKER

Title *Tulips Bench*

Date 2009

Medium Bronze, exterior grade acrylic

Dimensions 35 x 60 x 30 inches

Condition Assumed Fair; overall soil and dust accumulation, corrosion

Location Senior Center Patio

Description The serpentine form bench with backrest composed of colorful frieze of tulips and butterflies, continuing to a slatted seat accented by cutout butterflies, flanked by branch form armrests and supported by eight branch form legs joined by arched stretchers

Replacement Value - New	**$15,000**

ITEM DESCRIPTIONS

Item Number **4**

Object Type **Sculpture**

MARY ANN BAKER

Title *Let's Dance Bench*

Date 2009

Medium Bronze, exterior grade acrylic paint

Dimensions 40 x 60 x 30 inches

Condition Assumed Fair; overall soil and dust accumulation, corrosion, salt efflorescence, fading

Location Cesar Chavez Plaza, Barbara Lee Senior Center

Description The semicircular bench with painted, pierced backrest decorated with four registers of gold and red stylized forms, including stars, continuing to slatted seat accented with star-form cutouts, flanked by branch form armrests and supported by eight branch form legs terminating in high heel shoe and boot feet, all joined by arched stretchers

Replacement Value - New	**$15,000**

ITEM DESCRIPTIONS

Item Number **5**

Object Type **Sculpture**

MARY ANN BAKER

Title *Veterans Memorial Bench*

Medium Bronze, wood

Dimensions 35 x 60 x 20 inches

Condition Assumed Fair; overall soil and dust accumulation, coating deterioration and areas of loss, areas of corrosion

Location Civic Center Plaza

Description The bench with branch framed scene of American flag, soldiers, medals, and eagle amid stylized elements, continuing to slatted wood seat flanked by branch form armrests and supported on four branch form legs

Replacement Value - New	**$8,000**

ITEM DESCRIPTIONS

Item Number **6**

Object Type **Sculpture**

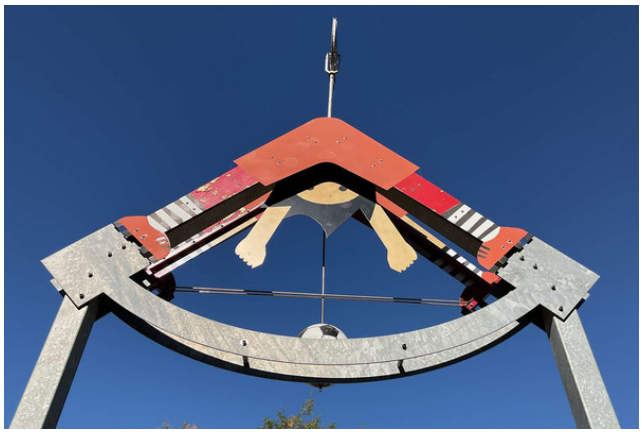

JOE BOLOGNA AND PATRICIA VADER

Title *Kicker Kid*

Date 2015

Medium Aluminum, steel, and paint

Dimensions

Condition Assumed Fair; operational, some wear, overall soil and dust accumulation, areas of coating loss, areas of paint loss

Location Cardoza Park

Description A kinetic sculpture in the form of a child in soccer uniform bending over between outstretched legs, with arms extended, a soccer ball below the child's head and a bike wheel above, connected by rods to the soccer ball

Replacement Value - New	**$30,000**

ITEM DESCRIPTIONS

Item Number **7**

Object Type **Sculpture**

DAVID ALAN CLARK

Title *Milpitas Minute Man*

Date 2013

Medium Bronze

Dimensions

Condition Assumed Fair; overall soil and dust accumulation, wax deterioration, corrosion

Signature Incised on base with date

Marks/Inscriptions Informational plaque on plinth

Location Milpitas City Hall

Description A standing man in Colonial dress wearing a tricorn hat and holding a musket in one hand and resting his hand on a plough with the other, a jacket folded over the plough

Replacement Value - New	**$278,000**

ITEM DESCRIPTIONS

Item Number **8**

Object Type **Sculpture**

JAMES DINH

Title *Circle of Time*

Date 2024

Medium Granite, concrete, paint

Dimensions

Condition Assumed Good; overall soil and dust accumulation, organic debris, bird droppings

Marks/Inscriptions Plaque on base, with information about the artwork

Location Jose Higuera Park

Description a circular disc with hollow center, reminiscent of a milestone, engraved with a design of black flowing tule reeds, positioned on a circular podium textured on the sides to evoke the weave of Ohlone baskets

Replacement Value - New	**$45,000**

ITEM DESCRIPTIONS

Item Number **9**

Object Type **Sculpture**

SCOTT DONAHUE

Title *Watching You*

Date 2015

Medium Concrete, ceramic tile, paint

Dimensions 138 x 66 x 66 inches (Overall)

Condition Assumed Fair; overall soil and dust accumulation, multiple cracks

Location Rathbone Park

Description Five tall columnar forms in gray and rose toned concrete separated by veins of orange and red tile, the columns featuring raccoons, eagles, deer, mountain lions, and steel head trout

Replacement Value - New	**$100,000**

ITEM DESCRIPTIONS

Item Number **10**

Object Type **Sculpture**

BILL GOULD

Title *Green Tree*

Date 2010

Medium Steel, recycled materials

Dimensions 240 x 144 x 144 inches

Condition Assumed Fair; overall soil and dust accumulation, cobwebs, corrosion, some chips and tangles

Location Pinewood Park

Description A stylized tree anchored by five spherical terminals, with a central cylindrical trunk issuing four arched branches, each ending in a spherical finial, all connected by a series of graduated rings, all hung with assorted ornaments composed of found objects

Replacement Value - New	**$100,000**

ITEM DESCRIPTIONS

Item Number **11**

Object Type **Painting**

DEBRA KOPPMAN

Title *Welcome to Milpitas*

Date 2021

Medium Acrylic paint on composite aluminum

Dimensions 30 x 48 inches (Each)

Condition Assumed good; overall soil and dust accumulation, abrasions and losses to paint

Location Variable

Description A five-panel freestanding mural, designed to be portable and flexible, with colorful images inspired by historic photographs of Milpitas, including the Smith's Corner general store, the Southern Pacific train, the Windsor Blacksmith Shop, the Pashote Building, and the Ford Assembly plant

Replacement Value - New	**$10,000**

ITEM DESCRIPTIONS

Item Number **12**

Object Type **Sculpture**

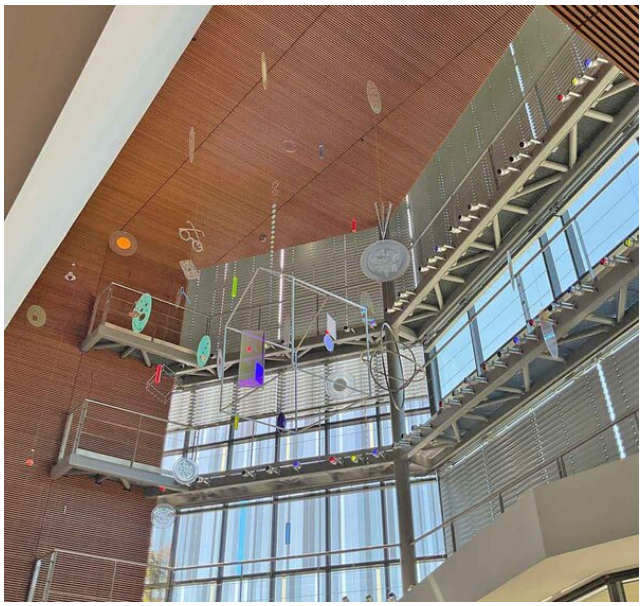

CORK MARCHESCHI

Title *Fertile Ground*

Date 2008

Medium Plastic, dichroic glass, monofilament

Dimensions

Condition Assumed good; overall soil, grime and dust accumulation, one element appears to be missing

Marks/Inscriptions Explanatory plaque below installation

Location Milpitas Library

Description A mobile installation with a series of objects (glasses, key, rings, airplane, shapes) suspended by monofilament from the ceiling, the objects meant to represent "kernels of thoughts, some have taken form, some have structure, but most float and await the collision that will start the process to form an idea."

Replacement Value - New	**$140,000**

ITEM DESCRIPTIONS

Item Number **13**

Object Type **Sculpture**

SHANNON MOORE AND MARCIA SMITH

Title *Hand in Hand around the Park*

Date 2004

Medium Ceramic mosaic tile, steel, paint

Dimensions 96 x 72 x 72 inches

Condition Assumed fair; overall soil and dust accumulation, corrosion to steel, cracking to tiles, some losses

Location Hillcrest Park

Description A central tapered column covered in colorful mosaic tile flowers and vignettes, topped by a sphere surrounded by a pierced metal ring with cutout words and hand prints the lower section with four seats further decorated with tile mosaic scenes and banner of text quoting Anne Frank

Replacement Value - New	**$50,000**

ITEM DESCRIPTIONS

Item Number **14**

Object Type **Sculpture**

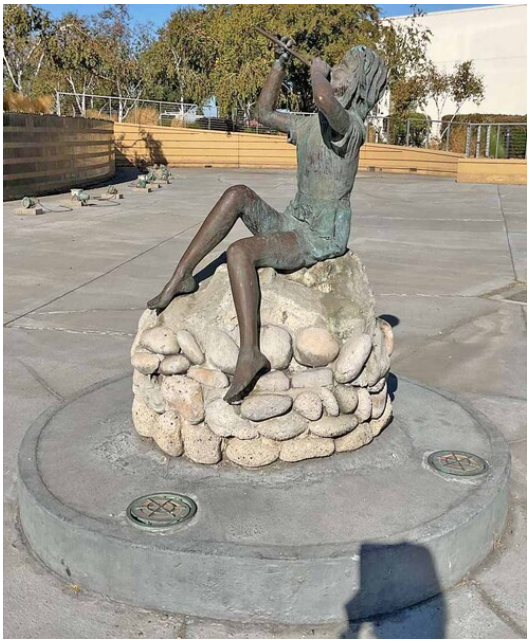

CARLA MOSS

Title *Flute Player*

Date 1996

Medium Bronze

Dimensions 60 x 30 x 30 inches

Condition Assumed Fair: overall soil and dust accumulation, corrosion, wax wear and loss, patina loss

Signature Incised on base, "C. Moss/S. Moss"

Marks/Inscriptions Incised date on base

Location Civic Center Plaza

Description A child seated on a rocky plinth playing a flute

Replacement Value - New	**$30,000**

ITEM DESCRIPTIONS

Item Number **15**

Object Type **Sculpture**

CARLA MOSS

Title *Cartwheels*

Date 2004

Medium Bronze

Dimensions 50 x 50 x 10 inches (Each)

Condition Assumed fair; overall soil and dust accumulation, corrosion

Signature Each with incised signature "C. Moss" and date

Location Milpitas Library

Description Three figures of children wearing colorful clothing, each in the act of turning a cartwheel, each figure positioned on a circular concrete base

Replacement Value - New	**$60,000**

ITEM DESCRIPTIONS

Item Number **16**

Object Type **Sculpture**

CARLA MOSS

Title *Little Alviso Water Tower*

Date 2012

Medium Acrylic panels, mixed media

Dimensions 84 x 40 x 40 inches

Condition Assumed fair; overall soil and dust accumulation, areas of paint loss and cracking

Location Alviso Adobe Park

Description A four-sided structure set on a aggregate square base, supported by four squared legs, each side set with horizontal panels depicting historical figures/scenes, alternating with friezes of grapes, horses, wagon wheels, cattle, maize, trees, and other elements, capped by a peaked adobe tile roof

Replacement Value - New	**$40,000**

ITEM DESCRIPTIONS

Item Number **17**

Object Type **Sculpture**

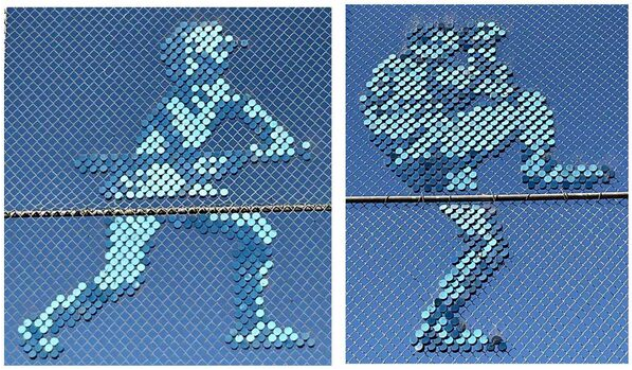

NILES PALMER

Title *Baseball Figures*

Date 2000?

Medium Painted metal

Dimensions

Condition Assumed good; overall soil and dust accumulation

Location Milpitas Sports Center, Baseball Field

Description Two baseball players, each composed of gradated blue circular metal discs fitted onto the chain link fence support, one in the act of batting and the other pitching

Replacement Value - New	**$75,000**

ITEM DESCRIPTIONS

Item Number **18**

Object Type **Painting**

JOANIE POPEO

Title *Our View*

Date 2021

Medium Pastel

Dimensions

Condition Assumed Good

Location Barbara Lee Senior Center

Description The vertical landscape with a dark green field and scattered trees below a central tan hill, dotted with areas of dark green foliage, under an expansive blue sky with scattered clouds

Replacement Value - New	**$12,000**

ITEM DESCRIPTIONS

Item Number 19

Object Type Sculpture

DAN SNYDER

Title *The Sundial*

Date 2002

Medium Cement, stainless steel

Dimensions

Condition Assumed fair; overall soil and dust accumulation, graffiti, corrosion on steel elements, minor cracks and abrasions

Location Sunnyhills, Albert Augustine Jr. Memorial Park

Description A curved path inset with angelic figures, musical notes, spirals and stars, leading to a circular surface divided into wedge segments, each further embellished with inlaid spirals, stars and musical notes, centered by a wide disc, with the text "Welcome Home,"supporting an octagonal column, inlaid on sides with directional indicators interspersed with further figural motifs, capped by a circular sundial, composed of Roman numeral dial face with the motto "only sunny hours" and a wave-form gnomon pierced with star and figural cut-outs

Replacement Value - New	**$100,000**

ITEM DESCRIPTIONS

Item Number 20

Object Type Sculpture

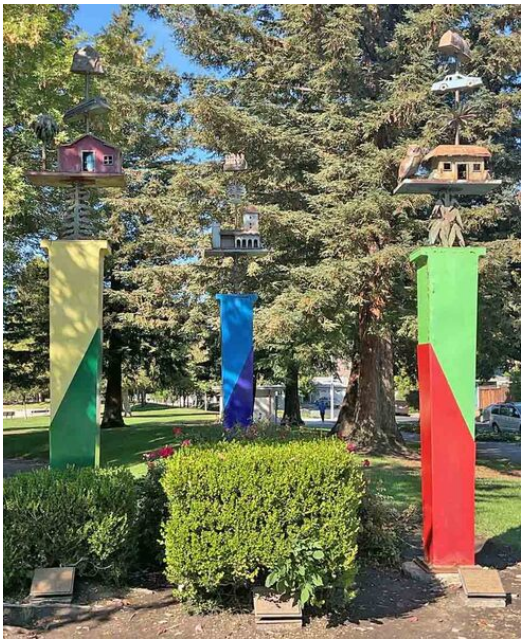

VICKIE JO SOWELL

Title *Legends of Milpitas*

Date 2003

Medium Painted steel

Dimensions 168 x 18 x 18 inches (Each)

Condition Assumed fair; overall soil and dust accumulation, corrosion throughout, pitting near seams

Marks/Inscriptions Explanatory plaque below each column

Location Murphy Park

Description Three columns each painted in two-tone color scheme: "Legend One" painted in yellow/green and capped by symbolic elements of a century plant blossom, the Joseph Weller palm, Old Laguna School, a Western Pacific Railroad locomotive, and Half Dome; "Legend Two" painted in light blue/dark blue and capped by symbolic elements of hummingbird sage blossom, a Mission style building, an olive tree and Ohlone Indians; "Legend Three" painted in green/red and capped by symbolic elements of corn, a burrowing owl, a century plant, the Higuera Adobe, a Ford sedan and the Milpitas Hills

Replacement Value - New	**$45,000**

ITEM DESCRIPTIONS

Item Number **21**

Object Type **Sculpture**

ADRIAN SUSNEA LITMAN

Title *Old Farm Wagon*

Date 2012

Medium Wood, steel, copper sheeting, paint

Dimensions 47 x 221 x 70 inches

Condition Assumed fair; overall soil and dust accumulation, corrosion, significant fading and wear to paint, evidence of pest activity

Location Alviso Adobe Park

Description A platform wagon with brightly painted blue and red wheels, set with a bench seat at front and continuing to a red and blue painted wagon tongue; the platform of the wagon fitted with metal text, "Jose Maria de Jesus Alviso, Rancho Milpitas, 1837 "and an array of fruits

Replacement Value - New	**$52,000**

ITEM DESCRIPTIONS

Item Number **22**

Object Type **Sculpture**

ADRIAN SUSNEA-LITMAN

Title *Four Seasons*

Date 2010

Medium sheet metal, metal wire, paint

Dimensions 48 x 48 x 3 inches (Each)

Condition Assumed Good

Marks/Inscriptions Each with applied plaque with artist's name and title

Location Hallway, Barbara Lee Senior Center

Description Top left, "Winter" - a square composition of geometric silver/gray fields and curving lines
Top right, "Spring" - square composition of diagonals and bright green patination patterns
Bottom left, "Summer" - square composition of matte gold fields, bordered in blue/green patination, a glossy copper background
Bottom right, "Autumn" - square composition of varying tones of red and brown elements and incised curving lines

Replacement Value - New	**$40,000**

ITEM DESCRIPTIONS

Item Number **23**

Object Type **Sculpture**

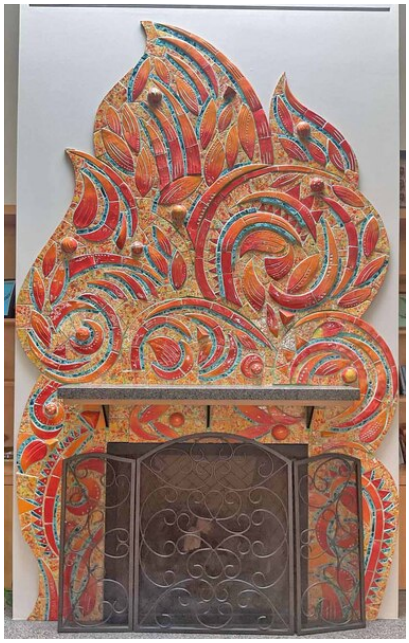

ADRIAN SUSNEA-LITMAN

Title *Garden Fantasy*

Date 2010

Medium Ceramic tile

Dimensions 144 x 84 inches

Condition Assumed Good; minor losses to some tiles, overall soil and dust accumulation

Location Lobby, Barbara Lee Senior Center

Description The fireplace surround composed of mosaic flame composition in swirling patterns red and orange, accented by areas of blue and green

Replacement Value - New	**$30,000**

ITEM DESCRIPTIONS

Item Number **24**

Object Type **Painting**

ADRIAN SUSNEA-LITMAN

Title *Thriving Legacy*

Date 2011 and 2024

Medium acrylic on wood panel

Dimensions

Condition Assumed Good

Location Barbara Lee Senior Center

Description The rectangular four panel mural featuring portraits of numerous figures and the seal of the City of Salinas, all on a bright yellow/orange background, together with two 36" circular portraits, one of a man wearing a fedora and smoking a pipe, and the other of a woman wearing glasses and a blue garment

Replacement Value - New	**$68,800**

ITEM DESCRIPTIONS

Item Number **25**

Object Type **Sculpture**

ADRIAN SUSNEA-LITMAN

Title *Birds of Paradise*

Date 2011

Medium Sheet metal, acrylic paint

Dimensions 30 x 150 x 36 inches

Condition Assumed Fair; overall soil and dust accumulation, coating deterioration and areas of coating loss

Location Main & Great Mall Parkway, Bus Shelter

Description The shelter top consisting of assorted sections of metal, some solid and some mesh, arranged to represent red bird of paradise blossoms amid wide green leaves

Replacement Value - New	**$32,000**

ITEM DESCRIPTIONS

Item Number **26**

Object Type **Sculpture**

LAUREL TRUE

Title *Starscape Bench*

Date 2007

Medium Glass and ceramic mosaic tile, concrete

Dimensions 42 x 84 x 84 inches

Condition Assumed Fair: overall soil and dust accumulation, graffiti, cracks and chips to tiles

Marks/Inscriptions Plaque on base with title, artist's name and dedication

Location Starlite Park

Description A star shaped bench with domed center covered in colorful mosaic pattern dotted with stars

Replacement Value - New	**$25,000**

Condition Ranking

Excellent: Works are usually contemporary or less than 20 years old. They are flawless without tears, fading, foxing and free of any debris.

Very Good: Used for works are usually older than 20 years and are clean, free of tears or paint chips. There may be some wear or fading that is considered normal and expected by the market due to the age of the work and does not cause a decrease in value.

Good: The work has some minor imperfections or has been restored. Minor imperfections include some debris that can be easily cleaned and brought to the level of “very good” or “excellent.” The work has been restored by a skilled restorer and evidence of damage or restoration is negligible.

Fair: The work is slightly damaged and requires some repair. The canvas has a small tear or has buckled or has some minor paint chips. The work has faded in color. Works on paper have minor tears, some brown discoloration, foxing spots or creases that can be restored.

Poor: The work is highly damaged, often beyond repair or requires a great deal of repair. For example the gap in a tear of the canvas is so large that it requires much alteration by a restorer.

State of the Market

Art Market End of 2024

In 2024, the global art market witnessed a period of transition, navigating economic challenges while embracing new trends. Overall, the art market experienced a modest contraction, with global sales declining by approximately 4% to $65 billion. This downturn was influenced by high interest rates, inflation, and geopolitical instability, which affected collector confidence and spending. The U.S. market share, although decreased by 10% to $27.2 billion, still represents 42% of the global market.

A notable shift was observed in collector motivations as art buyers showed a more investment-driven approach to art collecting. Additionally, younger collectors, particularly Millennials and Gen X, demonstrated increased activity, with a growing interest in contemporary and emerging artists. Female artists also gained greater representation, comprising 44% of artworks sold to high-net-worth individual collections, up from 33% in 2018.

The integration of technology continued to reshape the art market. Online-only sales reached $440.3 million, nearly tripling from 2020 levels, reinforcing digital platforms as critical components of the art market. However, sales in art-related NFTs declined sharply, from a peak of $2.9 billion in 2021 to $1.2 billion, reflecting a cooling interest in this segment.

There was significant activity in the market for affordable art, with works priced under $5,000 accounting for 82% of contemporary art sales. This trend highlights a shift toward accessibility and inclusivity, attracting new and younger collectors. The prints and editions sector also gained attention, offering a more accessible entry point into the art market with rising financial returns.

Despite a challenging year, the November 2024 auctions indicated signs of recovery. Approximately 35% of lots exceeded their mid-estimates, and new artist records were set, reflecting renewed confidence among collectors. However, some high-profile works, including pieces by Matisse and Rousseau, remained unsold, highlighting selective buying patterns. There is, therefore, resilience in the art market, with significant sales and a cautious yet optimistic collector base.

Looking ahead, experts predict that the art market will stabilize, with more gradual growth following the volatility of recent years. The market may expand by another 5-7% by 2025, with much of this growth coming from younger artists and collectors. Blue-chip works and traditional fine art are expected to remain strong, particularly as a hedge against inflation.

VALUATION ANALYSIS

Introduction to Our Valuation Analysis of Fine Art:

The most significant characteristic of value in determining value of artwork is the identity of the artist. The artist's skill and career are major factors in appraising a work of art and are the primary drivers of his/her market. An artist who is beginning to exhibit is considered an "emerging artist" and is typically accepted in art centers, universities and small, local galleries only, regardless of the quality of the work. An artist is considered to be "mid-career" when he/she shows their work with established galleries in metropolitan areas and local museums while also entering competitions to obtain commissions and awards. When the artist is juried into shows at larger commercial galleries and museums that span a larger area than just their local region, and is the subject of art reviews or is published in catalogues, the demand generally increases as the work gets exposure to a larger public. An artist at this stage is considered "established." The extent to which an artist is represented by a reputable gallery or dealer is an indication of the investment a gallery/dealer is willing to make into promoting a promising artist.

The works of mid-career and established artists may also appear at auction. Established artists with a strong market for their work on an international level, may also have a market with the major auction houses including Sotheby's and Christie's. Artists whose recognition is limited nationally with representation at galleries that specialize in that particular country and period might also sell at Sotheby's and Christie's but are more likely to be sold at other nationally recognized auction houses including Bonhams and Butterfields in California and London, Phillips de Pury in London, Heritage Galleries in Dallas, or Skinner in Boston.

Once the attribution of a work of art has been determined, either through the existence of the artist's signature or through provenance or expert analysis, the next characteristic of value is the type of work. Some artists have certain periods, styles or genres (subject matter) in their overall output that are more sought after than others. The importance of the specific piece within the artist's body of work as well as the work's rarity are taken into consideration in valuing a work of art.

The next characteristic of value is the quality of the work and its medium. A work's quality of execution, pictorial technique, richness, detail, color palette that appeals to most collectors and critics is assessed. In terms of medium, oils on canvas or board are traditionally the most valuable with watercolors, pastels, charcoal, ink and other drawing techniques on paper taking the next place. Prints and other types of multiples fall into the third category of value since the availability of the work in relationship to the demand influences the price as well. A print or multiple is valued according to type of printing process, its rarity and edition size. A larger edition size is less valuable than a smaller one and works that are out of print and rare on the open market, but popular, have more value.

The next categories determining value are condition and size. Works that are damaged or dirty are rarely sold at fine galleries, but may come up at auction at significantly reduced prices. Size is an important indicator of value as many works of art are often priced according to size;

however, in some cases large sizes may be a deficit as large paintings require adequate wall space.

Finally, whether or not a work may have won a prestigious award or have been included in a major museum exhibit, or published in a text book or museum catalogue would also have an impact on its value.

Valuing the City of Milpitas Art Collection:

The City of Milpitas collection consists of commissioned, site-specific installations. In order to arrive at replacement values for the subject properties, we researched the artists who made each piece. The majority of the artists are mid-career, active and working on projects. Replacement value for the works by these artists is based on their current pricing structure to re-create their commissioned works. In the case of artists who were unavailable to provide this information or appear to be no longer actively working, replacement value is based on pricing for a comparable new work by an artist of similar stature and reputation.

Certification: Andrea Roth

I certify that, to the best of my knowledge and belief:

•The statements of fact contained in this report are true and correct.

•The reported analyses, opinions, and conclusions are limited only by the reported assumptions and limiting conditions and are my personal, impartial, and unbiased professional analyses, opinions, and conclusions.

•I have no present or prospective interest in the property that is the subject of this report and no personal interest with respect to the parties involved.

•I have performed no services, as an appraiser or in any other capacity, regarding the property that is the subject of this report within the three-year period immediately preceding acceptance of this assignment.

•I have no bias with respect to the property that is the subject of this report or to the parties involved with this assignment.

•My engagement in this assignment was not contingent upon developing or reporting predetermined results.

•My compensation for completing this assignment is not contingent upon the development or reporting of a predetermined value or direction in value that favors the cause of the client, the amount of the value opinion, the attainment of a stipulated result, or the occurrence of a subsequent event directly related to the intended use of this appraisal.

•My analyses, opinions, and conclusions were developed, and this report has been prepared in conformity with the *Uniform Standards of Professional Appraisal Practice.*

•I have not made a personal inspection of the property that is the subject of this report.

•No one provided significant personal property appraisal assistance to the person signing the certification.

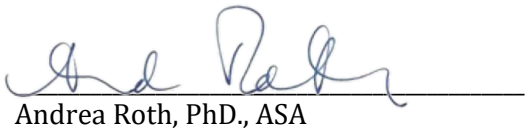

Andrea Roth, PhD., ASA
Roth Art Group

Certification: Liza Hickey

I certify that, to the best of my knowledge and belief:

•The statements of fact contained in this report are true and correct.

•The reported analyses, opinions, and conclusions are limited only by the reported assumptions and limiting conditions and are my personal, impartial, and unbiased professional analyses, opinions, and conclusions.

•I have no present or prospective interest in the property that is the subject of this report and no personal interest with respect to the parties involved.

•I have performed no services, as an appraiser or in any other capacity, regarding the property that is the subject of this report within the three-year period immediately preceding acceptance of this assignment.

•I have no bias with respect to the property that is the subject of this report or to the parties involved with this assignment.

•My engagement in this assignment was not contingent upon developing or reporting predetermined results.

•My compensation for completing this assignment is not contingent upon the development or reporting of a predetermined value or direction in value that favors the cause of the client, the amount of the value opinion, the attainment of a stipulated result, or the occurrence of a subsequent event directly related to the intended use of this appraisal.

•My analyses, opinions, and conclusions were developed, and this report has been prepared in conformity with the *Uniform Standards of Professional Appraisal Practice.*

•I have not made a personal inspection of the property that is the subject of this report.

•No one provided significant personal property appraisal assistance to the person signing the certification.

Liza Hickey, ASA
Roth Art Group

Printed Sources:

American Society of Appraisers Personal Property Committee, *Monographs 1-5, 6,7 and 13* (2017).

Appraisal Standards Board, *Uniform Standards of Professional Appraisal Practic*e. Washington, D.C.: The Appraisal Foundation, 2024.

Lucie-Smith, Edward, *The Thames and Hudson Dictionary of Art Terms*, London: Thames and Hudson, Ltd. 1984.

Soucy, Patricia C. and Smyth, Janella N., eds. *The Appraisal of Personal Property, Principles, Theories, and Practice Methods for the Professional Appraiser,* Washington, D. C.: American Society of Appraisers, 1994.

Internet Sources:

1stDibs

Year in Review Database
Public Art Network
Americans for the Arts
https://www.americansforthearts.org/

Galleries and Dealers Consulted:

Randolph Rose Collection
Yonkers, NY

Xanadu Gallery
Scottsdale, AZ

Artists Consulted:

David Alan Clark

James Dinh

Artik Art & Architecture (Bill Gould)

Dr. Debbie Koppman

Cork Marcheschi

Carla Moss

Joanie Popeo

Dan Snyder

Vickie Jo Sowell

Adrian Susnea Litman

Laurel True

Patricia Vader and Joe Bologna

APPRAISER'S CREDENTIALS

ANDREA Z. ROTH, PH.D.

EDUCATION

Ph.D., Art History, University of Southern California, 2002
M.A., Art History, University of Southern California, 1995
B.A., Honors, Political Science, University of California, Los Angeles, 1987

American Society of Appraisers (ASA), Accredited Senior Appraiser
American Society of Appraisers, Accreditation Program
Introduction to Personal Property Valuation (PP/GJ201), 2004
Personal Property Valuation Methodology, Research and Analysis (PP/GJ202), 2005
Appraisal Methodology: Report Writing (PP/GJ203), Rhode Island School of Design, 2005
Insurance and the Legal Environment (PP/GJ204), U.C. Irvine, 2006
California Art and Design, U.C. Irvine, 2006
Uniform Standards of Professional Appraisal Practice (USPAP), 7-Hour Update, August 8, 2024

EMPLOYMENT

October 2003 – Present
Roth Art Group: Founder & CEO
Independent fine art appraiser specializing in American and European paintings and sculpture from 1800 to contemporary. Prepare appraisal reports for insurance coverage, estate planning and tax, charitable donations, division of property, damage/loss claims, bankruptcy and collateral valuations. Offer art consultation services for sale and purchase, art investment, authentication research, market condition analysis and collection cataloging. May serve as expert witness at trials involving fine art and sculpture disputes.

Certified by California State Board of Education to offer courses for continuing education. Course offered: The Fine Art Appraisal and the Art Market

Offer seminars in IRS requirements for estate tax appraisals to estate planners and estate attorneys

Offer seminars in the current state of the art market and appraisal requirements to insurance brokers, estate planning, and family law professionals.

LECTURES & SEMINARS

AAML (American Academy of Matrimonial Lawyers)– Northern California Chapter, "What do we do with all this stuff? Valuations, Distribution and Selling Valuable Objects in Divorce." January, 17, 2024.

Central Oregon Estate Planning Council, "Protecting the Castle and Treasures: Risk Management for Valuable Items in an Estate." January, 31, 2024.

American Society of Appraisers, "Jewelry as Art, Art as Jewelry: Blurring the Boundary for the Appraiser," Webinar, June 2022.

San Francisco Trusts and Estate Planning Affinity Group, Provisors Trusted Advisors Group, "Digging for Treasure: How to Find and Protect Hidden Art Assets," March 2021

American Society of Appraisers, "Protecting Your Art: What You Need to Know About Copyright, Restitution, Money Laundering and Other Art Related Transactions," Webinar October, 2020

Bar Association of San Francisco, "The Art of Planning for Valuable Collections," July 2020

American Society of Appraisers, "The Value of Fame-Appraising Hollywood and Rock 'n' Roll Memorabilia," Webinar, June 2020

Santa Clara Estate Planning Council, "Case Studies in Complex Fair Market Value Appraisals," February 2020.

RIMS, Risk Insurance Management Society, San Francisco Chapter, "The Essentials of Art Asset Protection," January 2018.

Chubb Insurance, San Francisco, "The Fundamentals of Appraising Fine Art," November 2014.

Diablo Valley Estate Planning Council, Walnut Creek, "Challenging Your Own Value Wizard," June 2013.

City National Bank, Private Client Group, San Francisco, "Navigating the Current State of the Art Market," May 2012.

EMPLOYMENT(CONTINUED)

September 1994 - August 1996
***The Art Bulletin*: Editorial Assistant**
Monitored all daily operations of the *Art Bulletin*, the most prestigious journal in the discipline of art history. Reviewed and evaluated manuscript submissions, occasional editing of manuscripts, performed editorial-related research, extensive record keeping.

January 1992 - August 1993
J. Paul Getty Art History Information Program: Associate Editor
Edited all entries for the *Thesaurus of Geographic Names* (TGN), the first automated source of hierarchically-arranged international geographic data. Participated in strategic planning. Performed research, and wrote summaries for publishing.

July 1989 - December 1991
Bowles/Sorokko Galleries: Gallery Administrator
Supervised gallery administrative operations. Coordinated exhibitions and auctions. Maintained gallery archives, performed provenance research, prepared educational material. Wrote administrative procedures and training manuals. Gained overall familiarity with modern and contemporary art market trends.

TEACHING EXPERIENCE

Visiting Lecturer at the following institutions in the Department of Art History, teaching courses in European 16th and 17th century art:

University of California at Davis, Fall and Spring 2003
Mills College, Winter 2003

Santa Clara University, Fall 1999
University of California at Riverside, Spring 1997

Fellowships And Honors

William J. Fulbright Scholarship for Research in Italy, 1997-98
Gladys Krieble Delmas Foundation, Dissertation Writing Grant, 1999-2000
University of Southern California, Dissertation Writing Award, 2002

Professional Affiliations

Accredited Senior Appraiser (ASA), American Society of Appraisers
ASA NorCal Chapter Vice President, 2020-2022
ASA NorCal Chapter Board Member, 2022- present
ArtTable
J. Paul Getty Research Institute Affiliate

Foreign Languages

Italian, Romanian, Spanish reading ability

LIZA HICKEY, A.S.A.

EDUCATION

Master of Philosophy, European Fine & Decorative Art History, University of Glasgow (Christie's Education) 2002-2003
Bachelor of Arts, Psychology, Minor, Art History, University of California Santa Barbara, 1996 -2000

American Society of Appraisers (ASA), Accredited Senior Appraiser
American Society of Appraisers, Accreditation Program
- Introduction to Personal Property Valuation (PP/GJ201), 2009
- Personal Property Valuation Methodology, Research and Analysis (PP/GJ202), 2010
- Appraisal Methodology: Report Writing (PP/GJ203), 2010
- Insurance and the Legal Environment (PP/GJ204), 2011
- Uniform Standards of Professional Appraisal Practice (USPAP), 7-Hour Update, June 5, 2024

EMPLOYMENT

2024-Present
Roth Art Group: Head of Appraisal Services, Decorative Art & Antiques Appraiser
Conduct professional art appraisals for insurance coverage, estate planning and tax, charitable donations, division of property, damage/loss claims, bankruptcy, and collateral valuations. Offer project management, art market analysis, trend monitoring, and provide informed advice to clients to make strategic decisions within the art market.

2023-2024
Applied Art Appraisals: President and Decorative Art Appraiser
Accredited Senior Appraiser, American Society of Appraisers - Appraisal knowledge and expertise to solve valuation problems, with an emphasis on the functional arts, including ceramics, glass, metalwork, and furniture. Applied Art Appraisals offers professional, detailed, thorough and organized valuation reports for insurance coverage, charitable contribution and estate management.

2007-2022
Hobart Associates, Inc.: Associate Appraiser
Responsible for valuation of decorative arts, research, editorial assistance and office administration at small fine art and antique appraisal firm.

2011-2016
Freelance Writer, Editor, Researcher
Worked with Old Master prints and drawings, book specialist. Wrote, edited valuation analyses in collaboration with Fine Art appraiser

2004-2007
ABC-CLIO, Santa Barbara: Writer/Editor
Planned, researched, and produced numerous feature stories on a variety of geographic, political, and cultural topics. Wrote and edited news stories for use on educational web-based database. Collected and managed data on individuals (political leaders and cultural figures) and organizations (political parties, legislatures, cultural groups, et. al.)

PROFESSIONAL AFFILIATIONS

Accredited Senior Appraiser (ASA), American Society of Appraisers
ASA NorCal Chapter Secretary, 2016-2021
ASA NorCal Chapter Treasurer, 2022-2024
American Decorative Arts Forum, member, 2023-present
San Francisco Ceramics Circle, member, 2024-present

Glossary of Terms

Appraisal. An unbiased, supportable estimate of a defined value by a person trained in research and analysis, and who is knowledgeable about the property being appraised and its class, and acts with accepted and professed standards of professional practice. Appraisals are written and oral reports which communicate value.

Auction. A scheduled event where works of art are sold at a specific time and place to the highest bidder.

Characteristics of Value. The characteristics of a property significant in the market such as condition, date, subject matter or color. Characteristics of value are primarily questions of fact and have an objective relationship to the marketplace.

Provenance. The listing of the previous ownership of a work of art, forming an essential part of its history. Provenance is usually given in the entries for works of art in scholarly catalogues of a particular collection or entries for works of art in scholarly catalogues of a particular collection or artist's oeuvre.

PERCENT FOR ART

Case Studies

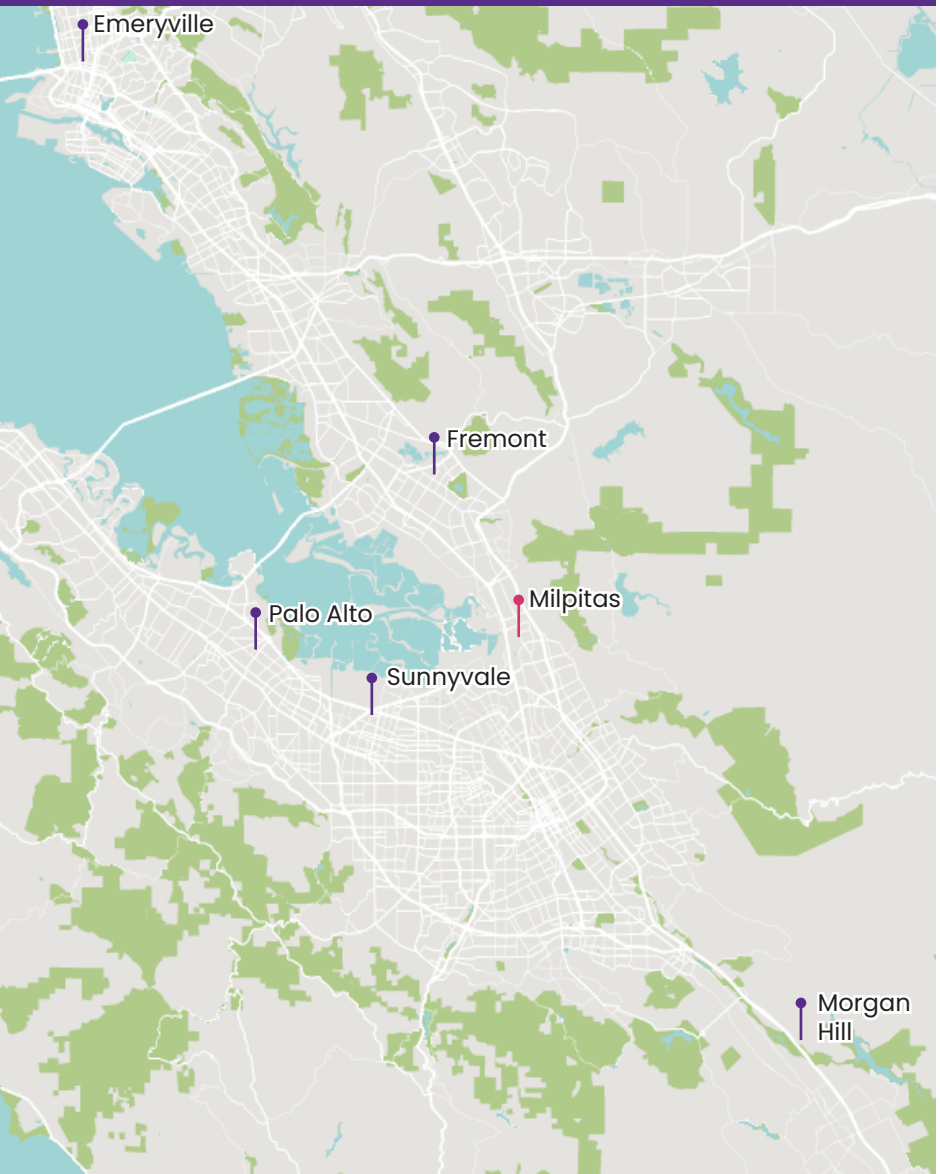

MILPITAS, CA

PUBLIC CIP/DEVELOPMENT ASSESSMENT

One and one-half (1.5) percent of eligible projects expenditures within the City's annual Capital Improvement Projects.

PRIVATE DEVELOPMENT ASSESSMENT

One-half (.5) percent of building development costs for Private nonresidential building developments involving 2,000 square feet or more of new floor area and Private residential building developments of 20 or more new dwelling units.

IN-LIEU CONTRIBUTION

One-half (.5) percent of building development costs.

ANALYSIS AND KEY TAKEAWAYS

Opportunity areas:

- Expanding Private Development assessment for public art to one and one-half (1.5) percent.
- Expanding the in-lieu contribution to one and one-half (1.5) percent.
- Provide clearer definition for eligibility for both private and public projects.

SUNNYVALE, CA

Distance from Milpitas: 10 miles southwest
Population: 155,805
Area: 22.78 miles²

PUBLIC CIP/DEVELOPMENT ASSESSMENT

One (1) percent of the project valuation within a variance of ten percent

PRIVATE DEVELOPMENT ASSESSMENT

Two (2) percent of project construction valuation

IN-LIEU CONTRIBUTION

Yes. The in-lieu fee shall be 1.1% of the building valuation. The additional .1% assessed is to be reserved in the public art fund for maintenance of the collection.

ANALYSIS AND KEY TAKEAWAYS

A public percent for art fee is not included in the ordinance, but Sunnyvale's provision of a maintenance assessment as part of the in-lieu fee is a sustainable approach to ensuring the collection's ongoing maintenance, especially if Sunnyvale private developers are more frequently opting into the in-lieu fee.

FREMONT, CA

Distance from Milpitas: 12 miles northwest
Population: 230,504
Area: 88.46 miles²

PUBLIC CIP/DEVELOPMENT ASSESSMENT

One (1) percent fee assessed for public projects.

PRIVATE DEVELOPMENT ASSESSMENT

The original 1987 ordinance was expanded in 2016 to include a private development assessment. For specified districts in the City, a fee per square foot of construction is assessed.

As of 2016, the fee was $0.52 per square foot. In Fremont, the amount of the fee shall be based on an amount per square foot adopted by resolution each year, based on the Consumer Price Index in the San Francisco-Oakland-San Jose area for the preceding year.

IN-LIEU CONTRIBUTION

Not for all projects, but for private development greater than 100,000 square feet, the developer has the option to contribute 50% of the assessed fee, if public art is not installed.

ANALYSIS AND KEY TAKEAWAYS

A square footage model is highly desirable for communities anticipating significant private development in coming years. This approach ensures a more accurate assessment is made.

PALO ALTO, CA

Distance from Milpitas: 16 west northwest
Population: 68,572
Area: 26 miles²

PUBLIC CIP/DEVELOPMENT ASSESSMENT

One (1) percent of the City's annual Capital Improvement Program (CIP) budget

PRIVATE DEVELOPMENT ASSESSMENT

One (1) percent of the estimated construction valuation

IN-LIEU CONTRIBUTION

Yes, one (1) percent of the estimated construction valuation

ANALYSIS AND KEY TAKEAWAYS

Palo Alto offers a very comprehensive suite of resources to inform Private Developer's understanding of the public art fee, their options for the one (1) percent assessed, and how the Palo Alto Art Program can support these processes.

MORGAN HILL, CA

Distance from Milpitas: 28 miles southeast
Population: 44,478
Area: 12.94h miles²

PUBLIC AND PRIVATE CIP/DEVELOPMENT ASSESSMENT

Applicable for both private and public projects:

Morgan Hill is exploring adopting a one (1) percent fee for the total construction valuation of new residential building developments of 20 housing units or more; nonresidential development projects of 5,000 square feet or more; and new public buildings and new city parks.

IN-LIEU CONTRIBUTION

Yes. The in-lieu fee shall be equal to the one (1) percent assessment.

ANALYSIS AND KEY TAKEAWAYS

Milpitas' current ordinance does not specify an in-lieu fee. It is common for in-lieu fees to be a fraction of the total fee assessed, if art is not selected, but clarifying what this amount should be will ensure consistency from project to project. It is recommended that the maximum amount for an in-lieu fee should be explored for revision in Milpitas' ordinance.

EMERYVILLE, CA

Distance from Milpitas: 50 miles northeast
Population: 12,732
Area: 2.01 miles²

PUBLIC CIP/DEVELOPMENT ASSESSMENT

One and one-half (1.5) percent of building costs for public art is assessed for municipal development projects.

PRIVATE DEVELOPMENT ASSESSMENT

One (1) percent of building costs for public art is assessed for private developers of non-residential buildings with building costs in excess of $300,000.

One-half (.5) percent of building costs for public art is assessed for private developers of residential projects over 20 units allocated.

IN-LIEU CONTRIBUTION

Yes, but the amount is unspecified.

ANALYSIS AND KEY TAKEAWAYS

While the public percent for art fee aligns with Milpitas', Emeryville assesses higher fees in private development.

Section 14 Public Art Requirements for Private Development

XI-10-14.01 Definitions

"Affordable Housing" is defined in Section XI-10-54.15.D of the Zoning Code.

Artist means an individual generally recognized by critics and peers as a professional practitioner of the visual, performing, or literary arts, as judged by the quality of that professional practitioner's body of work, educational background, experience, public performances, past public commissions, sale of works, exhibition record, publications, and/or production of artwork. The members of the architectural, engineering, design or landscaping firms retained for the design and construction of a development project covered by these policies shall not be considered artists for the purposes of these policies.

"Building Development Costs" means those construction costs as declared on building permit applications, and as accepted by the Building Official. Building permit applications shall include building, plumbing, mechanical and electrical permit applications for the project.

"Developer and/or Owner" means any individual, firm, limited liability company, association, partnership, political subdivision, government agency, municipality (other than the City of Milpitas), industry, public or private corporation, or any other entity that undertakes any construction within the City subject to the requirements in this Section 14.

Exterior place means any place, public or private, outdoor and exterior to buildings or structures and exposed to public view, including, but not limited to, buildings, parks, right-of-way medians and open spaces.

Local artist means an artist, as defined in this chapter, who resides in Santa Clara County, California.

Maintenance, with respect to artwork, means the required repairs or cleaning to keep a work of art in its intended condition, including preventative maintenance at scheduled intervals to curtail future deterioration, ordinary repairs or maintenance, including but not limited to, painting, repair, replacement, or installation of mechanical equipment.

Maintenance, with respect to ordinary property maintenance, means ordinary repairs or maintenance of a structure, including but not limited to, painting, roof repair, replacement, or installation of mechanical equipment.

"Public Art" is a process which results in the incorporation of original works of art by artists in publicly accessible spaces and which serves a socio-environmental function identifiable with people; is accessible to the mind and the eye; is integral to the site and responds to the concept of place making; is integrated with the work of other design professionals; is of high quality; serves the City by enhancing the quality of life for citizens and contributes to the City's prestige; is unique to its moment in time and place.

Public art master plan means the Public Art Master Plan of the City of Milpitas, California that pertains to public art, as it exists or may be amended. The Plan shall provide a process for the systematic selection and acquisition of pieces of artwork and locations of art to be included in public places.

"Public Art Program In-Lieu Contribution" means the percentage of Building Development Costs required herein.

"Public Art Projects" are projects which involve artists working through the public art process that result in the creation of original works in publicly accessible spaces that include but are not limited to paintings, mural decorations, inscriptions, stained glass, fiber work, statues, reliefs or other sculpture, monuments, fountains, arches, or other structures intended for ornament or commemoration, carvings, frescoes, mosaics, mobiles,

photographs, drawings, collages, prints, crafts both decorative and utilitarian in clay, fiber, wood, metal, glass, plastics and other materials. Public Art Projects also include artists serving on design and development teams to identify opportunities to incorporate art in publicly accessible space.

"Publicly Accessible Art" means art that is accessible to the general public.

Renovation means a project requiring a building permit where fifty percent (50%) or more of the exterior building area is being modified, rebuilt or improved by construction. For purposes of this chapter, "renovation" does not include the following:

1. Repair or reconstruction of structures which have been damaged by fire, flood, wind, earthquake or other casualty.
2. Historic preservation or restoration.
3. Development activity on existing, previously approved developments for the sole purpose of accessibility compliance.

Total construction costs means the total cost of the improvements, excluding land costs, approved for a development project, as indicated on the construction contract(s) for the subject improvements.

(Ord. No. 38.821, § 3, 5/19/15)

XI-10-14.02 Purpose and Intent

This Section 14 is intended to promote the aesthetics and arts in the City of Milpitas by requiring the inclusion of a public artwork component in new private development projects in Milpitas. A policy is hereby established to require certain private developments to include Publicly Accessible works of art for placement on the development site or contribute a Public Art Program In-Lieu Contribution as a condition of project approval. Developers and/or Owners are encouraged to employ Milpitas artists or arts organizations to fulfill the Public Art requirement.

(Ord. No. 38.821, § 3, 5/19/15)

XI-10-14.03 Contribution Requirements

A. Calculation.
   a. Nonresidential Building Developments. All ~~P~~private nonresidential building developments involving 2,000 square feet or more of new floor area shall devote an amount not less than one and one-half ~~of one~~ percent (1.5%) of total construction costs~~Building Development Costs~~ for acquisition and installation of Publicly Accessible Art on the development site.
   b. Residential Building Developments. All new ~~P~~private residential building developments of 10~~20~~ or more new dwelling units, including new construction, or the renovation or improvement of an existing building where fifty percent (50%) or more of a building is being modified, renovated, expanded, rebuilt or improved by construction, shall devote an amount not less than one and one-half ~~of one~~ percent (1.5%) of total construction costs~~Building Development Costs~~ for acquisition and installation of Publicly Accessible Art on the development site.
B. Public Art Review. All proposed Public Art to be installed on a development site under this Section 14 shall first be reviewed and approved by the Art Commission for its artistic value and appropriateness in light of the size of the development project. The cost of the proposed Public Art shall not be the sole reason for rejecting the proposed Public Art. The Art Commission shall consider the following criteria in recommending approval or disapproval of a work of art:
   a. *Complies*. The proposed art conforms to the definition of art contained in this chapter and will be created by an artist or local artist as defined in this chapter.

b. *Master plan*. The proposed art meets the qualities described in the public art master plan, if applicable to the project.
c. *Visual accessibility*. The proposed art will be readily visible to the public and meet the location requirements of this chapter.
d. *Quality*. The proposed artist is professionally recognized in the medium, and the proposed art is of quality and enduring value.
e. *Appropriateness to site*. The proposed art is of design, scale, and material appropriate to the site.
f. *Compatibility*. The proposed art is compatible with surrounding neighborhoods.
g. *Public Welfare*. The proposed art is not detrimental to the public welfare and will not constitute a safety hazard.
h. *Maintenance*.The proposed art will not require extraordinary maintenance.
i. *Valuation*. The proposed art meets or exceeds the public art assessment requirements of this chapter.
j. *Location*.The proposed location of the art and/or element(s) is in an exterior place and is appropriate to accommodate the size and scale of the proposed art and/or element(s), has or can reasonably accommodate any necessary supporting infrastructure and is in compliance with applicable city code requirements such as visibility triangle. Notwithstanding the foregoing, art purchased with the arts and culture fund or for public construction projects may be located inside publicly owned buildings.

C. *Requirements.* All private development meeting the applicability requirements of this section must elect one of the following assessment methods within ninety (90) days of the issuance of the first building permit or site work permit for a subdivision plat for any portion of the project: ~~In-Lieu Contribution~~.
   a. *Option 1: On-Site Artwork.* At the discretion of the Developer and/or Owner, in lieu of installing on-site Public Art, the Developer and/or Owner may provide a Public Art Program In-Lieu Contribution to be deposited into the Public Art Fund for acquisition and placement of Public Art throughout the City. The Developer may contribute an amount equal to one and one-half (1.5) percent of the total construction costs for deposit to the public art fund. The public art assessment must be paid in full prior to the issuance of a certificate of occupancy except for subdivision plats which are required to submit the public art assessment in full at the time of recording of the final plat;
   b. *Option 2: Contribute to Fund.*The Art Commission may allow a Developer and/or Owner to satisfy the public art requirement by a combination of installing Publicly Accessible Art on the development site and make a Public Art Program In-Lieu Contribution if the Art Commission determines that the location, siting or scale of the development site makes the installation of Publicly Accessible Art inappropriate or impossible for the purposes of satisfying the one and one-half percent (1.5%) requirement for installing Publicly Accessible Art on the development site.
   c. *Option 3. On-site Artwork and Contribute to arts and culture fund.* Where there are combined uses within a development project or portion thereof, the arts fee shall be the sum of the fee requirements of the various uses listed above.
   d. *Option 4: Alternative Equivalent Proposal.* Submit an alternative equivalent proposal to the Director of Planning.
      i. The proposal shall be for the installation of freely accessible work of art on City public right-of-way, on property owned by other public agencies, or on another property under the control or ownership of the developer. The proposal may seek a combination of the public art assessment associated with multiple projects into one larger work of art in lieu of several small works of art.
      ii. The proposal shall contain all information and establish all criteria set forth in section _____ of this Chapter, excluding the document required by _____.

iii. The developer must demonstrate that the cost of the proposal will equal the cost of the public art assessment otherwise required under subsection _____ and not create unbudgeted costs for the City.

iv. The City may approve the proposal if it finds that:

1. The alternative equivalent proposal will further the purposes of this chapter as set forth under section _____; and
2. The proposed location of the alternative equivalent proposal is in reasonable proximity to the location of the site(s) generating the work of art requirement, in order to avoid clustering of all public art in one location; and
3. The cost of the proposal will be equal to or greater than the cost of the public art assessment that would otherwise be required under Subsection _____; and
4. The developer has established to the satisfaction of the City that the alternative equivalent proposal will create freely accessible public art in the City to an equal or greater extent than installation of the public art on the individual project site or a contribution to the Fund.
5. In approving a proposal, the City may impose reasonable conditions of approval requiring the developer to enter into agreements with the City or other public agencies or private parties in order to memorialize the legal obligations of all parties involved with the alternative equivalent proposal.

D. The public art assessment for residential development projects will be calculated on a plat by plat basis. Total construction costs for purposes of calculating the public art assessment will be based on the total construction costs for all property depicted on each plat included within the residential development project.

E. Notwithstanding the foregoing, the public art assessment for any single project, cannot exceed one hundred thousand dollars ($100,000.00).

F. Subsequent Removal of Public Art or Alternative Compliance Space. If the Developer and/or Owner satisfies the Public Art requirement in accordance with subsection (A)(1), (A)(2), above, the Public Art previously installed on the development site may only subsequently be removed if the Developer and/or Owner makes a Public Art Program In-Lieu Contribution equivalent to the original amount to the Public Art Fund.

G. Exclusions. The requirements of this Section 14 shall not apply to:

a. an Affordable Housing development with a minimum of 20 percent Affordable Housing units if the Developer and/or Owner demonstrates to the satisfaction of the City Council that said requirements would cause the development project not to be economically feasible.
b. Transitional housing
c. Ordinary property maintenance.
d. Repairs and restoration resulting from fire, flood, windstorm or other casualty or natural disaster, as determined by the building official.
e. Industrial and commercial development that is not open or accessible to the general public due to the storage or use of hazardous, radiological, or infectious materials, national security reasons, or other reasons related to the health, safety, or security of the public.

(Ord. No. 38.821, § 3, 5/19/15)

XI-10-14.04 Public Art Fund

Public Art Program In-lieu Contribution shall be placed in the Public Art Fund. The fund shall be used exclusively to (1) provide sites for works of art, (2) acquire and install works of art, (3) maintain works of art, or (4) fund other administrative costs associated with the Public Art Program. The Art Commission shall recommend utilization of monies in the Public Art Fund to the City Council.

(Ord. No. 38.821, § 3, 5/19/15)

XI-10-14.05 Compliance

Compliance with the provisions of this Section 14 shall be demonstrated by the Developer and/or Owner at the time of filing the Building Permit application as follows: (a) payment of the full amount of the Public Art Program In-Lieu Contribution, or (b) written proof to the Building Department and the Public Art Program of a contractual agreement to commission or purchase and to install the requested artwork on the development site by a date approved by City. ~~The value of the Publicly Accessible Artwork shall be independently verified by a third-party unrelated to the Developer and/or Owner and submitted to the City with the contractual agreement at the sole expense of the Developer and/or Owner.~~ The Developer and/or Owner shall provide the City with proof of installation of the requested artwork on the development site or proof of full payment of the Public Art In-Lieu Contribution before issuance of the certificate of occupancy, unless the City has approved some other method of assuring compliance with the provisions of this Section 14. In the case of installation of Public Art on the development site, the Developer and/or Owner shall maintain said artwork in proper condition on an ongoing basis.

(Ord. No. 38.821, § 3, 5/19/15)

XI-10-14.06 Violations of this Section

In addition to other fines or penalties provided by State or municipal law, the City may revoke or suspend any permit granted to any Developer and/or Owner who violates the provisions of this Section 14.

(Ord. No. 38.821, § 3, 5/19/15)

****SECTIONS PROPOSED FOR ADDITION****

1.

Sec. _____. Inclusion of art at private development site.

1. *Location.* Artwork must be located in an exterior, publicly accessible place.
2. *Process.* If the developer chooses to provide artwork at the site of the private development, the developer must comply with the following process:
    a. *Escrow and accounting of funds for artwork.* The developer must submit documentation to the city showing a deposit for public art was made with the developer's attorney or escrow agent into an escrow account not more than ninety (90) days after the issuance of the first building permit or site work permit for subdivision plats, in an amount equal to one and one-half percent (1.5%) of the total construction costs.
    b. *Art consultant.* If the developer chooses to provide artwork on site, the developer may utilize up to twelve percent (12%) of the escrowed art deposit to retain an art consultant to assist in the selection and procurement of the required work of art. The art consultant cannot have a financial or other relationship with the artist or developer, or any ownership in the artwork purchased by the developer. The artist is not entitled to the art consultant fee.
    c. *Artist selection.* Selection of the artist will be the responsibility of the developer. The selected artist must be an artist as defined in this chapter. The commission of the artist must be by written contract between the developer and artist.

3. *Application for approval of proposed art.* An application for approval of the work of art must be made to the Art Commission within ninety (90) days of the issuance of the first building permit or site work permit for subdivision plats. The application must include:
    a. Artist's qualifications, including resume and portfolio establishing the artist's credentials.
    b. Detailed description and depiction of the work of art and its location on the site.
    c. Drawings and renderings of the proposed work of art, in terms of size, scale, color, shape, and materials in sufficient detail to provide a clear understanding of the art.
    d. Appraisal of the value of the art.
    e. Documentation showing that a deposit for public art was made into an escrow account.
    f. Maintenance program required for the artwork.
    g. Proposed restrictive covenant running with the land that binds the property owner's successors and assigns to retain and maintain the artwork in compliance with this chapter, as more specifically described in section _____.
    h. Compliance with public accessibility (ADA) requirements.
4. *Board review of contribution of art.* The Art Commission shall review the proposed artwork based on the criteria established in section _____ and shall recommend to the city council whether to approve, deny, or approve with conditions the selection and location of the artwork with sensitivity to the aesthetic and cultural traditions and the history of the city and to the character of the surrounding neighborhoods.
5. *Appraisal.* The value of the Publicly Accessible Artwork shall be independently verified by a third party unrelated to the Developer and/or Owner and submitted to the City with the contractual agreement at the sole expense of the Developer and/or Owner. Such appraisal will be paid for by the developer from the escrowed art deposit.

Sec. _____. Ownership and maintenance of artwork installed on private property.

1. Artwork installed on private property pursuant to the requirements of this chapter is the property of the property owner. Title and ownership of the artwork transfers in whole or in part to any successor in interest of the property. The property owner shall be responsible for maintenance of the artwork in good condition at all times, as determined by the city. The property owner shall be responsible for ensuring that the public's view of the artwork is maintained, and that no vegetation or additional construction obstructs the public's view. Maintenance includes any associated landscaping or related improvements.
2. The owner of any property containing artwork installed in compliance with this chapter must include restrictions by recorded covenant that require retention and maintenance of the artwork in compliance with this chapter to run with the land and be binding on the owner's successors and assigns. The restrictive covenant must be recorded within ten (10) days of the issuance of the certificate of occupancy for the project. Any such restrictive covenant must be approved by the city attorney prior to recordation.

Sec. _____. Removal or replacement of artwork installed on private property.

1. Artwork installed in accordance with this chapter must remain on site in the approved location and cannot be altered, replaced, or removed except as provided in this chapter, or when deemed to be unsafe by the city building official, or require replacement due to destruction or casualty to the artwork.
2. All replacement art must equal or exceed the value of the original artwork and must not be less than the original public art assessment requirement. If the artwork is to be replaced, the Art Commission shall review the proposed artwork and shall recommend to the city council whether to approve, deny, or approve with conditions the selection of the artwork in accordance with the arts and culture implementation guidelines.

Sec. _____. Enforcement.

1. *Certificate of Occupancy.* Unless an alternative deadline is established in a development order, or a time extension is granted by the planning director, no certificate of occupancy for a project subject to the public art assessment pursuant to section _____ will be issued until the artwork is installed and/or the full art assessment has been paid to the city.
2. *Other remedies.* The provisions of this chapter may also be enforced through any remedy available to the city in law or in equity. Violations may also be enforced through the code enforcement provisions of this code; or the city may institute a civil action in a court of competent jurisdiction to seek injunctive or other relief to enforce compliance with the terms of this chapter or any rule or regulation promulgated under this chapter, to enjoin and prohibit said violation or to compel the performance of actions which will result in compliance with this chapter. These remedies are cumulative, and the use of any appropriate remedy does not constitute an election of remedies by the city. The use of one remedy does not preclude the use of any others.

Milpitas, California
PUBLIC ART PROGRAM POLICY
EFFECTIVE [ ]

Introduction **1**
Definitions 1
Roles and Responsibilities **5**
Milpitas Mayor & City Council 6
Arts Commission 6
Public Art Administrator 6
City Manager and City Staff 7
Collection Management **8**
Donations 8
Donation Requirements 8
Donation Conditions 9
Donation Proposal Procedures and Review Process 9
Ownership 9
Criteria for Evaluation 9
Acceptance and Accession of the Artwork 10
Removal, Relocation, or Deaccession of Donated Artwork 11
Art on Loan or Temporary Display on City-owned Property 11
Collection Maintenance 13
Maintenance Guidelines for Acquiring New Works 13
Deaccession 14
Removal from Public Display 14
Provision for Emergency Removal 15
Criteria for Deaccession 15
Deaccession Application Process 16
Deaccession Application Review Process 16
Collection Management Best Practices 18
Public Art Program Update **19**
Use of Funds **20**
Uses for Funds 21
Uses for Funds in Mural Projects 21
Public Art Acquisition **22**
Goals of the Selection Process 22
Purchasing Procedures 22
Artist Selection Methods for Acquiring Existing Artwork 22
Artist Selection Methods for Commissioning New Artwork 23
Artist Services Procurement 24

Artist Selection Process for Artwork Acquisition. 24
Artist Selection Process and Responsibilities 24
Artist Selection Committee 25
Project Implementation Process for Site-Specific Artwork. 25
Mural Program Policy **28**

Introduction

The City of Milpitas has adopted Ordinance 271.1, adding the public art policy to the City of Milpitas Municipal Code (Title V, Chapter 20). This Policy includes the following sections: Roles & Responsibilities; Collection Management; Public Art Program Update; Use of Funds; Public Art Acquisition; and Mural Program Policy. Collectively the Policy administers the Public Art Plan and regulates Public Art pursuant to Title V, Chapter 20.

This policy establishes guidelines to ensure a consistent decision-making process related to the acceptance, placement, display, and long-term maintenance of public art funded in-full or in-part by the City, and/or public installed on City-owned property. The following elements have been considered in developing a public art policy for the City:

A. Develop a dynamic, high-quality collection of public artworks for the City and its residents
B. Involve artists of diverse backgrounds, representative of the City's diverse population
C. Provide opportunities for local artists to advance their art practice through temporary and permanent public artwork opportunities
D. Enhance economic development and encourage cultural tourism
E. Foster an understanding of public art and encourage public dialogue
F. Enhance the aesthetic appeal of Milpitas

Definitions

For these policies, the following terms, phrases, words, and their derivation shall have the meaning given herein:

Accession, when used herein, shall mean a procedure for the acceptance of artwork into the Public Art Collection.

Artist, when used herein, shall mean an individual generally recognized by critics and peers as a professional practitioner of the visual, performing, or literary arts, as judged by the quality of that professional practitioner's body of work, educational background, experience, public performances, past public commissions, sale of works, exhibition record, publications, and/or production of artwork. The members of the architectural, engineering, design or landscaping firms retained for the design and construction of a development project covered by these policies shall not be considered artists for the purposes of these policies.

Arts Commission, or ***Commission***, when used herein, shall mean the City Council-appointed Commission that advises Council on matters pertaining to the arts in Milpitas, as well as serve as the advisory body for the Public Art Program. The Arts Commission was established by Ordinance 271.1 and is pursuant to MMC V-20-410 and the Arts Commission Bylaws.

City, when used herein, shall mean the City of Milpitas, California.

Creative amenity, when used herein, shall mean non-standardized enhancements made to public places. Community art projects may be categorized as “Creative Amenities,” but not as “Artworks.” These projects are not subject to the Milpitas Public Art Policy.

Commissioned Public Art, when used herein, shall mean artwork whose existence or creation was requested and/or funded by the Milpitas Public Art Program. Such art may be permanent or temporary. Commissioned Public Art may be solicited by the City (such as through a Request for Proposals or Call for Artists) as part of a Council-approved public art program or project or planned as part of another City project (such as a development) and is paid for in whole or in part by City funds or City-obtained grant funding.

Community Art, when used herein, shall mean creative projects that are collaborative, place-based initiatives wherein community members participate in the project’s creation. These projects are not subject to the Milpitas Public Art Policy.

Deaccession, when used herein, shall mean a procedure for the withdrawal of artwork from the collection and the determination of its future disposition.

Donation or **Gift**, when used herein, shall mean a contribution, from an external source to the City with or without any restriction from the donor, of any of the following: monetary (cash) contribution; endowment; personal property; real property; financial securities; equipment; in-kind goods or services; or any other asset the City accepts and for which the donor has received no goods or services in return, other than private acknowledgement of the donation or gift, if desired by the donor, notation of the gift on a City maintained record, which shall not be publicized but which is a public record, and the placement of a small plaque on the donated item, if desired by the donor. The terms "donations" and "gift" shall be synonymous in the context of this policy.

Donor, when used herein, shall mean the person or legal entity that proposes or provides a donation to the City.

Historic or civic objects, when used herein, shall mean an object that is historically or civically significant.

Lender, when used herein, shall mean an individual, group, organization, or other legal entity that proposes or provides a loan of artwork to the City

Life Spans

- **Temporary:** less than one year and/or is meant to naturally deteriorate
- **Short term:** 1-10 years
- **Medium term** 10-25 years
- **Long term** 25+ years

Loaned Public Art, when used herein, shall mean public art that is loaned to the City by a third party for display on public property for an agreed upon life span.

Local Artist, when used herein, shall mean an Artist having primary residence with the City of Milpitas

Mural, when used herein, means a singular work of Public Art hand-painted, hand-tiled, or digitally printed (with property owner approval) on a building, structure, fence, or other object within public view. Its primary intent is to be artistic in nature, rather than purely information, creative signage and commercial signage. The work shall not contain text, graphics, or symbols which specifically advertise or promote a business, product, or service; and shall not promote a specific political party or candidate.

Public artwork or ***Public Art*** means works of art that are meant to be enduring original artworks located on, affixed or applied to City property. They shall be of the highest quality and craftsmanship.

- Public Art shall be permanently sited and an integral part of the landscaping and/or architecture of a building considering the historical, geographical and social/cultural context of the site.
- Public Art shall be constructed to a scale that is proportional to the scale of the building or property it relates to or is sited upon.
- Public artwork shall be displayed in a manner that will enhance enjoyment by the general public.

Public artwork may include

- sculpture, furnishings or fixtures, including but not limited to gates, walls, railings, streetlights or seating.
- water elements or features, environmental art consisting of landforms and artistic landscape composition, or artwork created from natural (non-man made) materials, and walkways if created by an Artist or design team that is led by an Artist.
- murals, photography and original works of graphic art, neon, glass, mosaics, or any combination of forms of media, furnishings or fixtures permanently affixed to a building or its grounds, or a combination thereof, and may include architectural features of buildings, if created by an Artist or design team that is led by an Artist.
- Functional art, such as street furniture

Public artwork does not include the following:

- reproductions by mechanical or other means of original works of art, except for limited editions, controlled by the artist, of original prints, cast sculptures, photographs or other works of art
- Art objects that are mass-produced of standard design such as playground equipment, benches or fountains;

- Decorative or functional elements or architectural details of a building designed solely by the building architect, unless such decorative and functional elements or architectural details are artist commissioned, t;
- Landscape architecture and landscape gardening that are designed by a Landscape Architect or Designer. Directional or wayfinding elements such as super graphics, signage, or color coding, except where these elements are integral parts of the original work of art or executed by artists in unique or limited editions. except where sculptural pieces are used to define gateways in Milpitas
- exhibitions and educational programs related to the work;
- and art that displays slogans, logos, mascots or commercial advertising
- Historical markers except where these are designed by an artist or affixed to and an integral part of an artwork.

The definition for Public Artwork is pursuant to MMC V-20-310.

Public Art Administrator or Administrator, when used herein, shall mean the Public Art Program administrator as determined by the City of Milpitas.

Public Art Collection or ***Collection,*** when used herein, shall mean art objects owned by the City of Milpitas, California, its agencies and authorities. Permanent Public Art must be located in a public place with public visibility, accessibility, and impact and shall have a permanence comparable to associated capital projects.

Public Art Fund, when used herein, shall mean the fund established by MMC V-20-610 and used to further the intent and purpose of public art activities in Milpitas and in the administration of the Public Art Policy. Monies in the Public Art Fund shall be used exclusively to (1) provide sites for works of art, (2) acquire and install works of art, (3) maintain works of art, or (4) fund other administrative costs associated with the Public Art Program. The Art Commission shall recommend utilization of monies in the Public Art Fund to the City Council. (Milpitas Municipal Code, Title XI, Chapter 10, Section 14)

Public Art Policy or ***Policy,*** when used herein, shall mean the policies recommended by the City Manager and approved by the City Council for the administration of the Public Art Plan.

Public Art Program, when used herein, shall mean the Public Art Program of the City of Milpitas, California. The Public Art Program intends to promote private and public programs to further the development and public awareness of, and interest in, the visual arts and fine crafts and encourage the integration of art into the architecture of municipal structures and commercial development projects in the City.

Public Art Program Master Plan or ***Plan***, when used herein, is the plan developed by The City of Milpitas with input from the public and upon the review, advice and recommendation of the Arts Commission. The Public Art Program Master Plan shall establish and guide the development and implementation of a Milpitas Public Art Policy. The Public Art Program Master Plan shall:

- Survey opportunities throughout the City for suitable sites and areas for the placement of Public Art;
- Provide advice as to the potential priority for Public Art installations;
- Advise as to potential Public Artwork aesthetic themes;
- Advise as to the appropriate cataloging and maintenance of Public Artwork.

The Arts Commission shall recommend to the City Council the adoption of program guidelines, policies and procedures to ensure consistent administration of the Public Art Program.

Public Art Selection Committee means a small group of residents, stakeholders and Public Art Commissioner chosen to review and recommend artwork for a specific project.

Public place, when used herein, shall mean any area or property (public or private) which is accessible or visible to the general public a minimum of 8 hours per business day.

Publicly-owned land, when used herein, shall mean any land open to the public and managed by the City of Milpitas, California.

Public Art Program Update, when used herein, shall mean an annual document that outlines projects that are in-progress and will be initiated in coming fiscal years.

Purchased Public Art, when used herein, shall mean artwork that existed prior to its purchase by the Milpitas Public Art Program. Purchased Public Art is either solicited by the City (such as through a Request for Proposals or Call for Artists) as part of a Council-approved public art program or project or planned as part of another City project (such as a development) and is paid for in whole or in part by City funds or City-obtained grant funding.

Relocation, when used herein, shall mean a procedure for the movement of an artwork from one location to another.

Roles and Responsibilities

The Department of Recreation and Community Services shall administer the City of Milpitas's Public Art Program, and may require partnership among several City Departments. Day-to-day responsibilities for the program will ultimately reside with the Public Art Administrator, and are outlined below in the Public Art Policy. The Public Art Administrator may be a City staff member or an outside consultant, and has an oversight role for all of the public art projects executed within the City. The Public Art Administrator will collaborate with City staff or outside contractors to execute projects

Milpitas Mayor & City Council

As the community's elected officials, the Mayor and Council members are ultimately responsible for the outcomes of the Public Art Program. In some cases, the Mayor and Council members serve as the final approving authority for artwork acquisitions, donations, and other activities of the Arts Commission.

Arts Commission

The Milpitas Arts Commission is pursuant to MMC V-20-410 and the Arts Commission Bylaws. This Commission advises on matters pertaining to the City of Milpitas's Public Art Collection, wherein the City is funding the creation or acquisition of new artwork in public places, as defined above. The Arts Commission serves as a recommending body to the City Council. General responsibilities include:

- Promote the City's public art to residents and visitors.
- Propose public art projects for the City to consider.
- Recommend sites for public art projects.
- Review and make recommendations on City-commissioned or purchased artwork, donations, or loan submissions.
- Review and make recommendations for artwork relocation or removal.
- Provide input on public art policies and procedures.
- With guidance from the Public Art Administrator, develop an annual Public Art Program Update, in consultation with the Mayor, City staff, and/or consultants that outlines what projects will be initiated in the coming fiscal year.
- Support duties and activities pertaining to the Milpitas Mural Policy
- Provide a member to serve on Public Art Selection Committees.

Public Art Administrator

The Public Art Administrator serves as a central point of contact and plays a key role in the administration of the City's Public Art Program, and will be overseen by the Recreation and Community Services Department. These duties may be assigned to a staff or consultant who will collaborate with various City departments to ensure the processes outlined in the Public Art Policy are carried out efficiently and appropriately. Their responsibilities encompass various aspects of public art processes, including planning, budget oversight, collaboration, artist selection, project management, and art acquisition, and outreach. Additional staff resources or outside consultants may be required to assist in implementing projects, particularly those of a larger scale. Responsibilities shall include, but are not limited to:

1. Work with various departments to develop potential projects for inclusion in the Public Art Program Update.
2. Coordinate with other City planning efforts.

3. Present the Public Art Program Update as part of the City's regular budget process to the City Council.
4. Coordinate and manage the Commission and its quarterly meetings
5. Coordinate with Commission to ascertain advice on any matter pertaining to public art, including:
    a. preparing and presenting the Public Art Program Update to City Council;
    b. artist selection juries and process;
    c. purchase of artworks;
    d. commission and placement of artworks; and
    e. public art programming;
6. Maintain a current written record of all works of art included in the Public Art Collection.
7. Ensure various City departments are following the City's Public Art Policy.
8. Assist with periodically surveying public art to determine if works require maintenance or other attention. Oversee trained art conservators for ongoing artwork maintenance as needed.

City Manager and City Staff

City staff members should look for opportunities to include public art in capital improvement projects (CIP) throughout the City, particularly in locations identified as priorities in this plan. Pursuant to MMC V-20-610.a.3, the City Manager shall annually notify the Arts Commission of which projects are eligible construction projects within the approved categories for the 1.5% formula application, as well as expenditures for the prior year subject to the 1.5% funding.

Collection Management

The City of Milpitas acquires artworks by purchase, commission, and donation. Processes for these acquisitions are dictated by the Acquisition and Donation sections found in this section. Artwork acquired through these processes are considered to have been accessioned into the City's Public Art Collection. They must be cared for in accordance with the policies and Procedure for Maintenance and the Collection Management policies. Artwork in the City's possession that were acquired outside of or before these policies may not be accessioned pieces of the Public Art Collection and thus may not be subject to the Collection Management policies. The Collection Management policies are intended to maintain the value of the City's Public Art Collection and guard against the arbitrary disposal of any of its pieces.

Objectives

- Maintain a collection management program that results in a high-quality, City-owned Collection;
- Eliminate artwork that is unsafe, not repairable, or no longer meets the needs of the City of Milpitas;
- Care for loaned artworks with the same standards and policies extended to the City's Public Art Collection;
- Respect the creative rights of artists; and
- Support an efficient workload for staff.

Donations

Requests to donate artwork to the City may be considered on a case-by-case basis. Pursuant to the City of Milpitas Donation Policy, the City Manager must pre-approve any publicized request(s) for donation, where the Arts Commission has established in advance, and publicized, a need, project, or location in which an art donation may be included. Requests for consideration shall be made to the Public Art Administrator and are ultimately approved by the City Council. The City has no obligation to accept a proposed Donation.

Donation Requirements

The City will consider donations on the following basis:

- The donation contributes to and enhances the City's Collection;
- The donation meets a high standard of quality and is appropriate and meaningful to the community;
- The donation follows required City procedures, including the submission of a Donation Proposal and a Maintenance Plan. Donation Proposal requirements are included in these policies. The requirements for the Maintenance Plan can be found in Procedure for Maintenance policies below;
- The donation proposal includes a plan to fund and deliver ongoing operations and maintenance – or the resolution accepting the public art must identify how maintenance will be funded; and

- The donation proposal is reviewed and endorsed by the Commission and approved by the City of Milpitas.
- The Public Art donation policy is pursuant to the City of Milpitas donation policy.

Donation Conditions

The City will not accept a donation of artwork until all funds for development, fabrication, siting, and installation have been secured. The City will consider the following types of donation proposals for artworks for City-owned property:

- An already completed artwork; or
- A commissioned artwork by a specific artist or artists to be created especially for City-owned property.

Donation Proposal Procedures and Review Process

Formal requests to donate artwork to the City of Milpitas are made to the Public Art Administrator.

1. The donor shall complete an Art Donation Agreement Application (donor form) and submit the form to the Public Art Administrator.
2. Following a positive initial review by the Public Art Administrator, the City will contact the Arts Commission, which will evaluate the donation request to determine the appropriateness of the donation as measured by approval criteria and provide a written recommendation to the City Council.
3. The City will then determine whether the donation is in the City's best interest and is consistent with the City's goals and applicable City laws, policies, Ordinances, and Resolutions.
4. The City will notify the donor in writing, identifying final conditions if approval is granted.

Criteria for Evaluation of Artwork Donation Proposals

The Arts Commission shall review Artwork Donation Proposals using the following criteria:

1. **City-owned Property** – Donated public artwork must be suitable for public display on City-owned or City-managed property;
2. **Relevance and Site Context** – Works of art must be appropriate for the proposed location and its surroundings and/or complement the architecture, topography, history, and social dynamic of the location in which it is placed;
3. **Artist and Artwork Quality** – The artist demonstrates the ability and potential to execute the proposed artwork based on previous artistic achievement and experience. Duplication of work will also be considered. The artwork must enhance the City's Collection;
4. **Physical Durability** – The artwork will be assessed for long term durability against theft, vandalism, and weather;
5. **Public Safety and Liability** – The artwork will be assessed for any public safety concerns, as well as for any potential liabilities for the City;

6. **Sustainability** – Consideration will be given to the environmental impact and sustainability of the proposed artwork, including its operations and maintenance requirements/costs; and
7. **Legal** – Proposed terms of donation, legal title, copyright authenticity, artist's right to reproduce, liability, and other issues as deemed appropriate will be considered.
8. **Originality** - Works of art should be an original design unless it is decided that the work will enhance and complement the character of the surrounding area.
9. **Compliance with Sign Code** - Proposed artwork should feature no copy, lettering, symbols, or any references directly promoting any product, business, or service unless such images are discreet and do not detract from the artwork. Sponsor and artist names may be incorporated in murals but should be discreet and not exceed 5% of the design.
10. **Supporting Costs** - The City's preference is for donors and lenders to provide financial support for public art projects. Donations and loans are an important tool for growing the public arts in Milpitas and they foster civic pride by providing people and businesses the opportunity to shape the public environment. Projects should identify funding sources. All requests for use of City funds for production, siting, installation or ongoing operations and maintenance of the work must be approved by City Council.
11. **Equal Opportunity:** Every effort shall be made to support the cultural diversity of the community and the artists in the City's Public Art Collection.
12. **Installation and Maintenance** - Any applicant for public art should present a reasonable plan to install and remove (or preserve) the work. The maintenance plan agreed upon between the artist, business owner, and/or property owner should adequately make arrangements to preserve and, if necessary, restore the quality of work during its exhibition. Elements of a thorough maintenance plan would include:
    a. Lifespan of artwork and prognosis of durability in consideration of that lifespan.
    b. Routine cleaning protocols, methods, cleaning agents, and frequency.
    c. Itemization of long-range considerations and care, highlighting maintenance and the anticipated need for periodic conservation treatment or repairs.
    d. Specifications of materials used in fabrication.
    e. Guarantee against failures of workmanship over an agreed upon period of time.
    f. Assignment of manufacturers or fabricators warranties to the owner of the artwork.

Acceptance and Accession of the Artwork

City staff should refer to City of Milpitas Donation Policy, prior to finalizing the accession process, as proposed donations may require approval by a Department Head, the City Manager, or City Council acceptance. If the proposal is accepted by the City of Milpitas, a formal agreement will be negotiated outlining the responsibilities of each party (the City, the donor(s), the artist, and outside contractors, where applicable).

The agreement will address project funding, insurance, siting, installation, operations and maintenance, project supervision, vandalism, the right of removal or transfer, public safety, and other issues as necessary.

The City of Milpitas will be the owner of the artwork and reserves the right to remove or alter the work to ensure public safety or because of any other City concerns. The City upholds copyright law and the Visual Artists Rights Act of 1990 (17 U.S.C. §§106A and 113(d)) and the California

Art Preservation Act (Cal. Civil Code §§ 987 and 989). Any changes will be made in consultation with the artist and donor(s) when possible, or notification will be provided.

The completed and installed artwork will be accessioned and added to the City's inventory list and master database with all accompanying documentation. The Acknowledgement of the Donation will be based on the appraised value of the artwork and pursuant to the City of Milpitas Donation Policy, section 4.2.

Removal, Relocation, or Deaccession of Donated Artwork

Once the City accepts a gift, the City shall be the sole owner of the donated item and will have the right, in its sole and absolute discretion, to deaccession any donated item without providing notice to or obtaining the donor's consent. In accepting a donation of artwork, the City of Milpitas will not be bound by any agreement with the donor that restricts the City's ability to act in the best interest of the City of Milpitas. Nothing in the acceptance of a donation of artwork shall prevent the City from approving subsequent removal, relocation, or deaccessioning of such donations if it serves the City's best interest to do so. The City will deaccession and dispose of works of art in its Collection in accordance with the Collection Management policies.

Art on Loan or Temporary Display on City-owned Property

Art on loan, or art on temporary display on City-owned property, must meet the Donation Requirements above, follow the Donation Proposal Procedures 1-11 above, and be reviewed through the Donation Proposal Review Process. Art on loan or art on temporary display on City-owned property must not be accessioned or added to the City's inventory list and master database. The City shall determine whether an expenditure of City funds, either a direct outlay of City funds or the use of City sources and materials, is associated with or required by acceptance of the loan prior to acceptance. The City may accept loaned public art from organizations and residents outside of the City.

All incoming loans should be documented and monitored in accordance with the same detailed procedures the government objects in Milpitas's Public Art Collection. Loans must be documented by written loan agreements between the lender and the City, which should be signed by the lender prior to delivery and/or installation of the work to the City.
Upon City approval of a loaned artwork, the lender must sign an Art Loan Agreement with the City. The agreement should include:

- Term of Loans
    - Loan agreements shall be for a minimum of six months and a maximum of two years, with a provision for up to one year extension with written approval from the lender and the City. When determining the duration of a loan and its duration for display, Lenders and the City should consider an object's material conditions, display location, and display context.

    - At the end of the term of loan, the lender will be granted up to six additional weeks for the removal of the artwork from the site on which it resides.
- Costs
    - The lender will be responsible for all costs associated with the loaned artwork, including but not limited to costs of transportation, installation, maintenance, removal, and repair (if needed).
    - The City will provide site maintenance as well as assistance with installation and removal, under the supervision of the lender or lender's representative. The City shall not be held responsible for any damage to the artwork while it is on loan.
- Installation Requirements
- Insurance
    - The City will not assume responsibility for damage or theft of artwork that is on display in accordance with this policy.
    - The lender will acknowledge that a risk of damage, loss, vandalism, or theft is inherent in a public display.
    - The lender must furnish satisfactory evidence of liability insurance by submitting a Certificate of Insurance, Additional Insured Endorsement listing the City, and Waiver of Subrogation. With approval from City Administration, the liability insurance requirement can be waived if the lender signed an Art Loan Release of Liability form.
- Maintenance Terms
    - Any requirements for routine inspections, and procedures for documenting and reporting any damage
    - The Loaned Public Art and surrounding site shall be kept in a clean and orderly condition and in accordance with Collection Management policies and the terms and conditions of the agreement, if one exists, between the lender and the City.
    - The lender or his or her designated representative will be utilized to make recommendations regarding the care and maintenance of the work of art when deemed appropriate by the City. A visual arts specialist or art conservator should be consulted if the artist or designated representative is not available to advise on the necessary care requirements.
    - The Recreation and Community Services Department shall be responsible for carrying out the lender's advice on such care requirements and for determining such requirements when the artist/donor is unavailable.
    - Prior to accepting the Loaned Public Art, the lender will provide the City with a condition inspection report to be confirmed by the City.
    - Vandalism or other damage to the Loaned Public Art shall be reported to the Milpitas Police Department and/or the Recreation and Community Services Department.
    - The lender shall pay the cost of maintaining the Loaned Public Art, unless otherwise provided in the written agreement between the lender and the City.
- Removal

- Lenders are required to remove Loaned Public Art by the agreed termination date. The City does not accept responsibility for Loaned Public Art not removed within the designated time frame. Any piece of art that is not removed by the deadline shall be treated as abandoned property
- Loaned Public Art may be removed from City property in accordance with the Deaccession section of this policy.

Collection Maintenance

The City of Milpitas will administer the maintenance of the City's Collection with advice from the Public Art Administrator and other outside partners through regular evaluation and planning for the care of the existing Collection. This section addresses:

- Accessioning and inventorying the City's Collection of public art;
- Conducting a biennial Survey and Condition Assessments of all work in the Collection;
- Preparing a biennial Public Art Maintenance Plan; and
- Overseeing routine maintenance and special conservation treatment of the City's Collection.

Every five years, the City of Milpitas will assess the condition of all public art with a qualified professional conservator and develop a prioritized list of works in need of conservation or maintenance. This list will be the basis of the Public Art Maintenance Plan. All artwork maintenance, specialized repair, routine care, and/or preventative treatments will be funded by the Public Art Fund.

Maintenance Guidelines for Acquiring New Works

Maintenance Plan
As described in the Acquisition policy, all acquired artworks must have a maintenance plan developed. The Maintenance Plan will be used to:

- Advise the Commission, appropriate City staff, and others who must review and approve design proposals or accept or decline donated artwork;
- Troubleshoot the production of construction drawings, the fabrication of the artwork, and the preparation of the site;
- Follow-up on the artist's recommendations; and
- Refer to during the post-fabrication/installation inspection to prepare a final report and a punch-list to complete the project.

The City of Milpitas, professional conservators, and artists will strive to address the recommendations in the Maintenance Plan without unduly interfering with the aesthetic intent of the proposed public art.

Post Fabrication/Installation Inspection for Commissioned Artworks.

The Post-Fabrication/Installation Inspection conducted by City staff will be based upon and follow-up on the Maintenance Plan that was developed during the design phase. It will include the following:

- Ensure that recommendations made in the Maintenance Plan and during fabrication were followed;
- Confirm that the artwork is executed as proposed and agreed upon;
- Confirm that there are no missing or incomplete elements;
- Establish that materials quality and stability are acceptable;
- Establish that fabrication quality and stability are acceptable;
- Confirm that installation is stable and secure;
- Confirm that stainless steel is fully and properly “passivated”;
- Confirm that, if required, protective coatings have been applied;
- Ensure that warranties for electronic and other media are submitted as necessary;
- Identify any remaining vulnerabilities;
- Confirm no new damage resulting from installation process;
- Ensure that the maintenance and operations plan is accurate; amend as needed; and
- Confirm that the plaque/public notice meets program policies and is properly installed.

Deaccession

Removal from Public Display

Requests to deaccession artwork to the City may be considered on a case-by-case basis. Requests for consideration shall be made through the Public Art Administrator to the Commission, based on the deaccession criteria below. The Director of the Recreation and Community Services Department shall have the discretion to determine whether a relocation of art is deemed significant or non-significant based on City policy and legal requirements and subject to the approval of the City Manager or their designee.

If the artwork is removed from public display, and the removal is not an emergency removal, then the City of Milpitas may consider the following options for deaccession:

- Relocation: If the Commission recommends that an artwork must be removed from its original site, and if its condition is such that it can be re-installed, the Commission will attempt to identify another appropriate site. If the artwork was designed for a specific site, the Commission will attempt to relocate the work to a new site consistent with the artist’s intention. If possible, the artist’s assistance will be requested to help make this determination. The City may, as necessary or appropriate, transfer City-owned public art from one public site to another, transfer public art to storage, or make a temporary loan of public art to another agency or organization.

- Store artwork until a new site has been identified or the City decides to deaccession the artwork.
- Sell or trade the artwork after deaccession.

If an artwork's Agreement specifies terms of deaccession, then the City shall dispose of the work accordingly. Once deaccessioned from the City's collection, a work may not be installed on City property.

Provision for Emergency Removal

In the event that the structural integrity or condition of an artwork is such that the artwork presents an imminent threat to public safety, the City Manager may authorize immediate removal without the artist's consent, and have the artwork placed in temporary storage. If the Artist's agreement with the City has not been waived under the Visual Artists Rights Act of 1990 (17 U.S.C. §§106A and 113(d)) and the California Art Preservation Act (Cal. Civil Code §§ 987 and 989), then the City must notify the artist of this action within 30 days. The City will then consider options for repair, reinstallation, maintenance provisions or deaccessioning. The City is not obligated to repair, reinstall, and/or replace temporary artworks (including but not limited to utility box wraps, murals, etc.) that have been removed either as a result of the Provision for Emergency Removal, or due to inadvertent damage or destruction.

In the event that the artwork cannot be removed without being altered, modified, or destroyed, and if the Artist's agreement with the City has not been waived under the Visual Artists Rights Act of 1990 (17 U.S.C §§106A and 113(d)) and the California Art Preservation Act (Cal. Civil Code §§ 987 and 989), the City must attempt to gain written permission before proceeding. In the event that this cannot be accomplished before action is required in order to protect the public health and safety, the City shall proceed according to the advice of the City Attorney.

Criteria for Deaccession

The following may be grounds for the City to deaccession public art from City-owned or controlled property, for one or more of the following reasons:

1. An artwork is not, or is only rarely, on display because of lack of a suitable site.
2. The condition or security of the artwork cannot be reasonably guaranteed.
3. The artwork has been damaged or has deteriorated and repair is impractical or unfeasible.
4. The physical structure of the artwork endangers public safety.
5. The public art was stolen from its location and cannot be retrieved.
6. In the case of site specific artwork, the artwork's integrity or relationship to the site is altered because of significant changes in the use, character, or design of the site
7. The artwork has been determined to be incompatible within the context of the collection.
8. The City of Milpitas wishes to replace the artwork with work of more significance by the same artist.
9. Maintenance costs are higher than anticipated

10. Faults of design or workmanship make repair or remedy impractical or unfeasible.
11. The City of Milpitas has approved necessary site alterations
12. Written request from the artist or donor.
13. Significant, adverse public reaction has continued unabated over an extended period of time.
14. Over time, the public has widely publicly associated the artwork with racism, sexism, homophobia, xenophobia, acts of assault or violence, or other offensive themes.
15. The City Council has determined that it is in the best interest of the City to remove the public art.

Deaccession Application Process

Preliminary Request
Permanent artworks must be in place for at least five years before deaccession or relocation requests will be considered unless matters of public safety or emergency removal provisions necessitate the removal. Deaccession or relocation requests may be submitted by the public.

Deaccession and Removal Form
Applicants will be required to submit a written request to the Public Art Administrator City staff, or the appropriate for consideration of deaccession or removal of artwork.

Deaccession Application Review Process

In consultation with the Commission, the Public Art Administrator will review requests and decide on either engaging in the process for deaccession review, or work with the City Staff and the Commission to determine appropriate relocation.

Public Meeting
The City may hold a public meeting to gather community feedback on a proposed deaccession or removal, unless the removal is an emergency. The City may also decide to hold additional public meetings or gather community input through other methods. The City may seek additional information regarding the work from the artists, galleries, curators, appraisers, or other professionals before making a recommendation.

Artist Involvement
If deaccession or removal is recommended, the artist (if available) will be contacted and invited to provide input to the City. The artist’s contract and other agreements or pertinent documents will be reviewed and sent to the City Attorney’s Office for final approval.

Recommendation
The Public Art Administrator will prepare a report and consult with the City Attorney, as necessary. City staff’s recommendation may include dismissing the request and/or modifying, relocating, selling, donating, disposing, or storing the artwork.

The Public Art Administrator will provide all relevant correspondence including, but not limited to:

1. Artist's Name, biographical information, samples of past artwork, and resume.
2. A written description and images of the Artwork.
3. Artist's Statement about the Artwork named in Deaccession or Relocation Request (if possible)
4. A description of the selection process and all related costs that was implemented at the time the Artwork was selected.
5. A formal appraisal of the Artwork (if possible)
6. Information regarding the origin, history, and past ownership of the Artwork
7. Information about the condition of the Artwork and the estimated cost of its conservation.
8. Information and images of the Artwork's site
9. Any information gained from the public meeting held about the deaccession and removal of the work.
10. Feedback from the Recreation and Community Services Department responsible for operating and maintaining the Artwork.
11. Detailed budget for all aspects of conservation, maintenance, repair, installation, operation, insurance, storage, and City Staff support.
12. The Artist's contract with the City.

City staff can recommend one or more of the following methods for an artwork's deaccession:

1. Sale or Exchange - sale shall comply with the State of California and City of Milpitas laws and policies governing the sale of municipal property.
    a. Artist, or estate of the artist, will be given the first option to purchase or exchange the artwork(s).
    b. Sale may be through auction, gallery resale, direct bidding by individuals, or other forms of sale in compliance with the California of California and City of Milpitas law and policies governing surplus property.
    c. Exchange may be through an artist, gallery, museum or other institution for one or more artwork(s) of comparable value by the same artist.
    d. No works of art shall be traded or given to Commission members or City of Milpitas staff.
    e. Proceeds from the sale of artwork shall be placed in the Public Art Fund. Any pre-existing contractual agreements between the artist and the City regarding resale shall be honored. An exception to these provisions may be required if the artwork was originally purchased with funds that carried with them some restriction, for example, bond funds for street and sidewalk improvements, in which case the proceeds shall be placed in an account designated for art allowed under similar restriction(s).

2. Destruction of Artwork – if artwork is deteriorated or damaged beyond repair or deemed of negligible value.
3. If the City of Milpitas is unable to dispose of the artwork in the manner outlined above, the Public Art Administrator may recommend the donation of the artwork to a non-profit organization or another method.

Costs

If deaccession or relocation accommodates the applicant's interests or project, they may be required to cover the deaccession or relocation at no cost to the City.

Conflict Of Interest
No works of art shall be given or otherwise transferred publicly or privately to officers, directors, or employees or staff of the City of Milpitas or their immediate families or representatives of the City of Milpitas.

Compliance With Applicable Policies And Regulations
Deaccession and relocation of artwork will be done in a manner that complies with all other applicable City of Milpitas, State of California, and federal procedures, policies, and regulations.

Existing Public Art Pieces At Time Of Policy Adoption
Existing public art pieces on City-owned property should be evaluated using the accession criteria to ensure that it is appropriate for the City to continue owning and maintaining the artwork. If it does not meet the accession criteria, then the piece will not be accessioned into the Milpitas Public Art Collection.

Collection Management Best Practices

Integrity of Artworks
The Milpitas Public Art Program will seek to ensure the ongoing integrity of the artwork and the sites for which they were created, to the greatest extent feasible, in accordance with the artist's original intentions, and consistent with the rights afforded by the Visual Artists Rights Act of 1990 (17 U.S.C. §§106A and 113(d)) and the California Art Preservation Act (Cal. Civil Code §§ 987 and 989).

Access to Artworks
The City will seek to assure continuing public access to artworks in its Collection and/or artwork that has been funded by public funds. However, the City may limit availability due to circumstances such as funding, public safety, display space, and deaccession processes.

Life Spans
An artwork's life span is either the amount of time its materiality will allow it to be displayed (either for artwork safety or artwork integrity reasons), or the object's display period, as determined by a contract between the City and the artist, whichever is shorter. Life spans assigned to the work during the commissioning process will be considered as part of requests for deaccession or removal. For artworks that have not been assigned a life span, the Public Art Administrator may engage experts to assist in assigning the artwork a life span, based on the life expectancy of the artwork's materials and fabrication methods, and/or the programming priorities of the Commission.

- Temporary: less than one year

- Short Term: 1 -10 years
- Medium-Term 11 - 25 years
- Long-Term 26+ years

Public Art Program Update

The Public Art Program Update is a document that outlines in-process projects, and projects will be initiated in the coming fiscal year(s). The Program Update is one of the most crucial elements of the Public Art Program. It creates a roadmap and allows for the input of community members, elected officials, and others who care deeply about public art in Milpitas.

The Public Art Administrator will develop the Update in consultation with staff and the Commission and submit it as part of the annual operation and/or CIP budget for review and approval. The following steps will be taken to develop the Public Art Program Update:

1. Work with Recreation and Community Services to determine the availability of funds for the upcoming year(s).
2. Identify projects to be paid for by identified funding, including acquisition and maintenance.
3. Identify Creative Amenity or Community Art projects that coincide with City programming and events throughout the year.
4. Develop a draft Public Art Program Update that will include locations, goals, and budgets for public art projects and programs for staff review.
5. Present the Update as part of the City budget approval.
6. Integrate feedback from City Council to determine the final Program Update.
7. Report on the use of funds collected to support the Public Art Program to and increase the amount of art in the City that is available to the public.

Use of Funds

Funding for the Milpitas Public Art Program may come from:

- the Public Art Fund, pursuant to MMC V-20-610 and MMC XI-10-14.04;
- the City's Capital Improvement Budget;
- grants and/or contributions from private entities;
- other public agencies;
- philanthropic sources; or
- through other sources as deemed appropriate by the City.

Uses for Funds

Pursuant to [CODE], expenditures of the Public Art Fund shall include, but are not limited to:

- The cost of public art and its installation, which includes the hiring of artists to develop and design concepts for the selection, acquisition, purchase, commissioning, placement, installation, necessary site preparation, artist travel, exhibition and/or display of artwork;
- Waterworks, landscaping, lighting, plaques and other objects, which may be an integral part of the public artwork;

- Frames, mats, pedestals and other objects necessary for the presentation of the public artwork;
- Walls, pools, landscaping and other architectural or landscape architectural elements necessary for the proper aesthetic and structural placement of the public artwork;
- Maintenance and repair of public artwork funded through the Public Art Fund;
- Administration of the City's Public Art Program, including staff support and related expenses, transportation of Public Art, site preparation, permit or certificate fees, business and legal costs directly associated with specific Public Art projects, master planning, installation and maintenance of Public Art, curatorial services, documentation, publicity and community education. Administrative costs shall also include staff time, direct costs and administrative overhead.
- Hiring of consultants on an as needed basis to advise and assist the Arts Commission in such areas as professional appraisal of Public Artwork; packing and shipping of public artwork; conservation and maintenance; collection documentation; installation design; presentation assistance; contract negotiation; artist selection; program monitoring; on-site monitoring of public artwork installation.
- Reproductions of original works of art.

The public art funds may not be spent for:

- Art objects, which are mass-produced of standard design such as playground equipment or fountains, with the exception of limited editions controlled by the artist.
- Decorative, ornamental, or functional elements which are designed by a project's architect or other designer as opposed to a commissioned artist
- Routine maintenance, conservation, repair, or restoration, exceeding more than 10% of the annual budget.
- Purchase of existing works of art outside of the selection process.
- Landscape architecture and landscape gardening that are designed by a landscape architect or a landscape designer
- Creative Amenities or Community Art projects.
- Professional graphics, unless designed or executed by an artist or used in the development of collateral material.

Uses for Funds in Mural Projects

The installation of a mural may necessitate additional expenses beyond the artist fee and materials. Additional fundable expenses include but are not limited to:

- Artist(s) fees for design and execution of murals.
- Rental or purchase of painting equipment or the purchase of painting supplies.
- Preparation of the mural surface including repairs and priming.
- Rental of barricades and other equipment required of street or alley closures.
- Lighting and electrical equipment.
- Other expenses that are pre-approved by the City Manager or their designee, and the City of Milpitas during the annual budget process.

Public Art Acquisition

These policies establish the practices for acquiring artworks. The procedure creates a thorough and transparent process for acquiring artwork and favors open-ended selection processes to ensure artistic excellence in the City's Collection.

Selecting the artist is one of the most critical steps in commissioning public art. An open, equitable, competitive process that inspires the artist and engages the community can be an enriching experience and lead to more creative and exciting public art. The Public Art Administrator will work with the Commission to determine the appropriate method for commissioning new artwork for each Public Art Program project.

Goals of the Selection Process

- To satisfy the goals of the project site through an appropriate artist selection.
- To further the mission and goals of the Public Art Program.
- To select an artist or artists whose existing public artworks or past collaborative design efforts have demonstrated a level of quality and integrity.
- To identify an approach to public art suitable to the goals and demands of the particular project.
- To select an artist or artists who will best respond to the distinctive characteristics of the site and the community it serves.
- To select an artist or artists who can work successfully as members of an overall project design team.
- To ensure that the selection process represents and considers the interests of all parties concerned, including the public.
- To ensure, on average, the demographics of the artists and selection committees are reflective of Milpitas's population, on average.

Purchasing Procedures

City staff should refer to the City of Milpitas Purchasing Policy, prior to confirming an acquisition method and finalizing the acquisition process.

Artist Selection Methods for Acquiring Existing Artwork

Competitions
In competitions, the City may put out an open call to artists for a possible inclusion in an exhibition at a predetermined site. The competition, which may or may not take the form of a temporary exhibit may feature existing artworks. Each selected artist may receive a stipend and the City may purchase one or more pieces of artwork at the conclusion of the exhibit to be placed in public locations around Milpitas. All calls for artists will be advertised on the City of Milpitas's website, appropriate procurement site.

Direct Selection
On occasion, artists may be recommended directly by the Artist Selection Committee. Direct selection may be useful on projects where an urgent timeline, low budget, or where precise project requirements exist.This list of artists could come from a pre-qualified list. Approval for this method should be in accordance with the City of Milpitas's purchasing procedures. City staff should refer to the City of Milpitas Purchasing Policy, prior to finalizing the acquisition process.

Direct Purchase
Some projects require the purchase of a specific artwork due to the exacting nature of the project or a minimal project timeline. In this case, the work must be "one-of-a-kind" and not mass-produced or off the shelf. This list of artists could come from a pre-qualified list. Approval for this method should be in accordance with the City of Milpitas's purchasing procedures. City staff should refer to the City of Milpitas Purchasing Policy, prior to finalizing the acquisition process.

Artist Selection Methods for Commissioning New Artwork

Open Competition
In an Open Competition, any artist may submit their qualifications or proposal, subject to any requirements established by the Artist Selection Committee. The Requests for Qualifications (RFQs) or Requests for Proposals (RFPs) should be sufficiently detailed to permit artists to determine whether their art is appropriate for consideration. Open Competition allows for the broadest range of possibilities for a site and brings in new, otherwise unknown, and emerging artists.

Limited or Invitational Competition
In a Limited Competition or Invitational, several pre-selected artists are invited by the Artist Selection Committee to submit their qualifications and/or proposals. This method may be appropriate when the City is looking for a small group of experienced artists, a limited time frame, or if the project requirements are so specialized that only a limited number of already identified artists would be eligible.This list of artists could come from a pre-qualified list.

Direct Selection
On occasion, artists may be recommended by the Artist Selection Committee. Direct selection may be useful on projects where an urgent timeline, low budget, or where precise project requirements exist.This list of artists could come from a pre-qualified list.

Direct Purchase
Some projects require the purchase of a specific artwork due to the exacting nature of the project or a minimal project timeline. In this case, the work must be "one-of-a-kind" and not mass-produced or off the shelf. This list of artists could come from a pre-qualified list.

Artist Services Procurement

Design Team Member
In some instances, the City may use a targeted process to select an artist as part of a larger project design team. Language would be added to the project Request for

Qualifications/Request for Proposals specifying that all teams responding to the RFQ/RFP must include a professional artist from a pre-qualified list as described in the section below. Given the nature of the project, a design team responding to an RFQ/RFP may be asked to identify an artist as part of the team based upon criteria established by the City in the RFQ/RFP. In this case, the Public Art Administrator will represent the Program as part of the selection committee for the design team.

Pre-Qualified Artist Lists
The City may decide to develop a pre-qualified pool of artists from which it can choose artists for Limited Competition, Direct Selection, and Direct Purchase. This pool would be developed based on a comprehensive review of artist qualifications. This list could be updated annually or bi-annually, depending on the frequency of new projects. Inclusion on this list does not guarantee that artists will be selected for a commissioned project.

Artist Selection Process for Artwork Acquisition.

Once an Artist Selection method is determined, a selection process will be established. A jury of recognized experts and community members will make recommendations for selected artists to create site-specific artwork or will make recommendations for artwork chosen to be exhibited.

If the budget for a single piece of artwork is $50,000.01 or more, a selection panel must be formed. If the budget for a single piece of artwork is $50,000.00 or less, then the Commission may act as the selection committee.

Artist Selection Process and Responsibilities

The artist selection process will interpret and review the artist's proposals based on the selection criteria. The goals of the selection process are as follows:

- To satisfy the goals of a specific project or site through an appropriate artist selection.
- To further the mission and goals of the Public Art Program.
- To select an artist or artists whose existing public artworks or past collaborative design efforts have demonstrated a level of quality and integrity.
- To identify an approach to public art suitable to the goals and demands of the particular project.
- To select an artist or artists who will best respond to the distinctive characteristics of the site and the community it serves.
- To select an artist or artists who can work successfully as members of an overall project design team.
- To ensure that the selection process represents and considers the interests of all parties concerned, including the public, the arts community, and the City department(s) involved

Artist Selection Committee

Membership of Selection Committees

Membership will be recommended by the Public Art Administrator. The members of the selection panel (panelists) will be representative of the community demographic and will consist of at least five (5) but no more than nine (9) members from the list below:

- Members of the Arts Commission (3 or less to avoid quorum)
- Artist or arts administrator;
- Design professionals
- City of Milpitas project manager who may appoint the project architect or project landscape architect in their stead; and
- A member of the project steering committee if one has been appointed
- Community or neighborhood representative

Artist Selection Committee Conflict of Interest

Artist Selection Committee members will declare any conflicts of interest for all projects and artwork under consideration at the beginning of their meetings. A conflict of interest exists if a committee member, an organization the committee member is associated with as a staff or board member, or a committee member's family member can gain financially from the project under consideration by the Artist Selection Committee. In order to promote public confidence in this process, a committee member may also declare a conflict if they think there may be a perception that they have a conflict. If a committee member has a conflict, he/she must not participate in the Artist Selection Committee's discussion or decision regarding the project. They must also refrain from discussion about the project and from influencing fellow committee members.

Artist Election Committee Procedures

During an artist selection process, Artist Selection Committee members will not submit applications for the placement of their own artwork and/or projects. City Staff and Commission members can invite artists to participate but must refrain from giving advice to applicants or answering their questions and direct such questions to the Public Art Administrator during the selection process. The Commission shall seek public comment for all pieces of public art commissioned or purchased for over $50,000.01. An opportunity for public comment must be given before a formal vote. A formal vote recommending the selection to the City of Milpitas City Council must be recorded in keeping with the City of Milpitas public record requirements.

Project Implementation Process for Site-Specific Artwork.

Upon the decision of the Artist Selection Committee, and with the assistance of the City Attorney's Office, the Public Art Administrator will prepare a contract that includes the scope of work, fee, schedule, and relevant terms and conditions to be approved by the City and artist.

The City will follow the process for contracting required by law. For some projects, the contract with the artist may be phased to include two scopes of work with separate pay schedules and deliverables. The first phase would include all design documentation, including final design, stamped engineering drawings, installation details, and a revised fabrication budget and timeline. The second phase would include all costs related to fabrication and installation.

The Public Art Administrator will ensure all documents are signed and insurance coverage secured before issuing a notice to proceed and will be responsible for coordinating the artist's work to ensure the successful integration of the artwork into the project. The Public Art Administrator will organize a meeting with all integral staff to review roles, responsibilities, and schedules.

If specified in the contract, the artist will develop design development drawings for review and approval from the City before fabrication. The Public Art Administrator will schedule meetings with the appropriate offices to review and approve the plans.

If the artist proposes any significant design changes, the Public Art Administrator will secure the recommendation for approval from the Commission and the appropriate departments of the City before approving said changes in writing, per the terms and conditions of the contract.

If the parties are unable to reach mutually beneficial contract terms, then the contract process will be terminated.

The Public Art Administrator will be responsible for overseeing the installation of the artwork. The Public Art Administrator will ensure that all the necessary requirements have been completed before interim and final invoice payments to the artist.

Maintenance Plan
Understanding maintenance and care of public art begins before an artwork is created. During the design phase or when a donation is initiated, the City, artist, or donor will review and analyze their design proposal and advise on maintenance and operations of the artwork. It is best practice and highly recommended that an art conservator is contracted to give a report on the proposed artwork.

On behalf of the City, the artist, donor, or the appropriate party will submit a Maintenance Plan to the City of Milpitas, who will review and then catalog any tasks associated with maintenance of the artwork.

The Maintenance Plan will enable the City to:

- Evaluate the quality and sustainability of the proposed or existing public artwork;
- Establish maintenance requirements, assign schedules, and identify potential costs; and
- Determine if the City of Milpitas should accept or decline the design proposal and/or public artwork.

To produce the Maintenance Plan, the artist should examine and render an opinion on the following:

- Durability;
- Type and integrity of materials;
- Construction/fabrication technique;
- Internal supports, anchoring and joining, and footings;

- Landscaping;
- Vulnerable and delicate elements;
- Drainage of artwork;
- Potentially dangerous elements;
- Security;
- Location;
- Environment;
- Whether the design encourages/discourages interaction; and
- Effects of skateboarding, graffiti, and any other potentially damaging activities.

The Maintenance Plan will include:

- A record of the artist's intentions for the artwork;
- Recommendations to mitigate potential problems discovered during the examination;
- Notes about how the artist would like the artwork to age;
- An itemization of long-range considerations and care, highlighting maintenance and the anticipated needs for periodic conservation treatment or repairs; and
- Identification of the lifespan of the artwork and a prognosis of its durability in consideration of that lifespan.

The artwork may also be identified as site-integrated, or part of the site and/or the architecture, as appropriate and will fall into the long-term lifespan category above.

Mural Program Policy

The City of Milpitas Mural Program seeks to promote mural activity reflective of the heritage, diversity, and aspirations of our community through engagement with muralists, property owners, community stakeholders and residents. Publicly-owned murals may occur on publicly-owned buildings or on privately-owned buildings where the property owner agrees to a mural easement allowing for the creation and maintenance of a publicly-owned mural on private property for a specific period of time. The Mural Program Policy is pursuant to [link policy?].

—--- End of policies —--

CITY OF MILPITAS
AGENDA REPORT
(AR)

Item Title:	**Adopt a Resolution Appointing an Interim City Manager (Kelli Parmley, Human Resources Director, 408-586-3086)**
Category:	Leadership and Support Services
Meeting Date:	4/15/2025
Recommendation:	(1) Adopt a resolution to appoint an Interim City Manager effective on approval and until a permanent City Manager is appointed, (2) Approve and authorize the Mayor to execute an employment agreement on behalf of the City, and (3) Authorize the Assistant City Manager or designee to take such other actions as necessary and appropriate to carry out the purpose of this appointment.

BACKGROUND:

The City of Milpitas is established as a Council-Manager form of government, which requires the City Council to appoint a City Manager or Chief Executive to handle the day-to-day operations and administration of the City. The departure of City Manager Ned Thomas, effective April 16, 2025, requires the City Council to take action to ensure an effective transition until a permanent City Manager can be appointed.

On February 11, 2025, the City Council convened a sub-committee of the Council comprised of Mayor Carmen Montano and Councilmember Evelyn Chua to guide the process of recruiting and hiring an Interim City Manager. In consultation with the City Attorney and Human Resource Director, the sub-committee retained the services for executive recruitment from a professional firm, WBCP, Inc., to facilitate the process. WBCP conducted a search to identify and preliminarily screen candidates. On April 1, interviews were conducted by the full City Council at a special meeting, convened in closed session. On April 1, the City Council provided direction and authority to the City Attorney to negotiate a contract for the Interim City Manager position with support provided by the Human Resource Director. On April 15, 2025, the Council will meet in closed session to complete their consideration of who to appoint as an Interim City Manager.

ANALYSIS:

On behalf of the City Council, staff is recommending the City receive the City Council final recommendation from the closed session meeting and appoint an Interim City Manager with the terms and conditions identified in the employment contract (Attachment 2). This appointment would be in effect upon approval by City Council and until an appointment of a permanent City Manager.

POLICY ALTERNATIVE(S):

Alternative 1: Do not adopt the resolution appointing an Interim City Manager.

Pros: None
Cons: This will create difficulty in the smooth transition of leadership and the City Council is obligated by the Municipal Code to appoint and/or authorize an officer of the City to perform the duties of the City Manager.

FISCAL IMPACT:

The fiscal impact for the Interim City Manager position is based on a contemplated six-months appointment and includes base salary, customary benefits as established in the City of Milpitas Unrepresented Handbook, and any additional economic benefits identified in the terms and conditions of the employment agreement. The table below demonstrates the estimated fiscal impact for FY 2024-25, approximately 2.5 months, and for FY 2025-26, approximately 3.5 months, for a total contemplated six-months assignment (132 workdays during the period). The Affordable Housing Community Fund is allocated 3% of total salaries and benefits, with the remainder allocated to the General Fund. FY 2024-25 costs will be funded through the vacancy savings of the

City Manager position as of April 17, 2025, with the shortfall funded with forecast Citywide vacancy savings in the 2024-25 fiscal year; those forecast Citywide vacancy savings are approximately $1.5 million as of the writing of this Agenda Report. The estimated expenditures for FY 2025-26 will be included in the FY 2025-26 Proposed Operating Budget and subject to City Council adoption and appropriation.

Use of Funds							
Interim City Manager	FY 2024-25			FY 2025-26 Proposed Operating Budget			
	100 - General Fund	216 - Affordable Housing Community Fund	Total (~2.5 Months)	100 - General Fund	216 - Affordable Housing Community Fund	Total (~3.5 Months)	Total (6 Months)
Salary	$ 74,940	$ 2,318	$ 77,258	$ 111,703	$ 3,455	$ 115,158	$ 192,415
Benefits	49,347	1,526	50,873	73,554	2,275	75,829	126,702
Total Use of Funds	**$ 124,287**	**$ 3,844**	**$ 128,131**	**$ 185,257**	**$ 5,730**	**$ 190,987**	**$ 319,117**

Source of Funds							
City Manager Vacancy Savings	FY 2024-25			FY 2025-26 Proposed Operating Budget			
	100 - General Fund	216 - Affordable Housing Community Fund	Total (~2.5 Months)	100 - General Fund	216 - Affordable Housing Community Fund	Total (~3.5 Months)	Total (6 Months)
Salary	$ 56,822	$ 1,757	$ 58,579	$ 84,697	$ 2,619	$ 87,316	$ 145,896
Benefits	44,576	1,379	45,955	66,443	2,055	68,498	114,453
Total	**$ 101,398**	**$ 3,136**	**$ 104,534**	**$ 151,140**	**$ 4,674**	**$ 155,814**	**$ 260,348**
Citywide Vacancy Savings	22,889	708	23,597	34,117	1,056	35,173	58,769
Total Source of Funds	**$ 124,287**	**$ 3,844**	**$ 128,131**	**$ 185,257** 0	**$ 5,730**	**$ 190,987**	**$ 319,117**

California Environmental Quality Act (CEQA):

Approval of the recommendation is not an activity defined as a "project" under the California Environmental Quality Act (CEQA) pursuant to CEQA Guidelines 15061(b)(3) and 15378(b)(4) either because it can be seen with certainty that there is no possibility that the activity in question may have a significant effect on the environment and/or because the action is financial and/or administrative and does not directly impact the environment.

RECOMMENDATION:

(a) Adopt a resolution to appoint an Interim City Manager effective on approval and until a permanent City Manager is appointed;
(b) Approve and authorize the Mayor to execute an employment agreement on behalf of the City; and
(c) Authorize the Assistant City Manager or designee to take such other actions as necessary and appropriate to carry out the purpose of this appointment.

Attachment(s):

1. Resolution Appointing an Interim City Manager
2. Employment Agreement

RESOLUTION NO. XXXX

A RESOLUTION OF THE CITY COUNCIL OF THE CITY OF MILPITAS AFFIRMING THE APPOINTMENT OF _____ AS CITY MANAGER ON AN INTERIM BASIS AND APPROVING SPECIFIED SALARY AND BENEFITS FOR THE POSITION

WHEREAS, the position of City Manager for the City of Milpitas needs to be filled on a temporary basis to prevent stoppage of public business until a permanent replacement is hired; and

WHEREAS, the City Council desires to appoint _____ as City Manager for the City on an interim basis; and

WHEREAS, _____ has over __ years of public sector experience with an extensive history in leading and managing departments within public agencies and

WHEREAS, the annual salary to be paid to _____ for performance of the City Manager position is $379,000.00 per year; and

WHEREAS, _____ will also continue to receive all other benefits and incentive which Unrepresented Miscellaneous Exempt employees receive unless waived; and

WHEREAS, _____ will also receive benefits as specified in their Employment Agreement.

NOW, THEREFORE, the City Council of the City of Milpitas hereby finds, determines, and resolves as follows:

1. All facts set forth in the background section of this Resolution are true and correct.
2. The City Council hereby affirms its appointment of _____ as City Manager on an interim and temporary basis effective the day following the last day of employment for the present City Manager, currently projected to be April 17, 2025.
3. The City Council hereby approves the salary and benefits specified in this Resolution to be provided to _____ during their appointment as Interim City Manager.
4. The City Council hereby authorizes the Mayor to execute an employment agreement on behalf of the City in the form attached hereto as Exhibit A.
5. The City Council hereby authorizes the Assistant City Manager or designee to take such other actions as necessary and appropriate to carry out the purpose of this appointment, including updating pay and pay schedules as necessary.

PASSED AND ADOPTED this 15th day of April, 2025, by the following vote:

AYES:	()
NOES:	(0) None
ABSENT:	(0) None
ABSTAIN:	(0) None

ATTEST:

_____
Suzanne Guzzetta City Clerk

APPROVED:

_____
Carmen Montano, Mayor

APPROVED AS TO FORM:

_____
Christopher Creech, Acting City Attorney

EMPLOYMENT AGREEMENT

THIS AGREEMENT ("Agreement") is between the City of Milpitas, a municipal corporation ("City" or "Employer"), and _____ ("Employee"), collectively referred to as the "Parties" and individually as "Party." It is effective on the day following the last day of employment for the present City Manager, currently projected to be April 17, 2025 ("the Effective Date").

This Agreement is entered into on the basis of the following facts, among others:

A. The City desires to employ, on a temporary and interim basis, the qualified professional services of Employee as Interim City Manager of the City while it seeks a permanent replacement for its City Manager, as provided by the Milpitas Municipal Code. The Employee is intended to serve as Interim City Manager until the date when the next City Manager's employment commences.

B. Following a professional recruitment, and after interviewing several Interim City Manager candidates, _____ was selected by the City Council to serve as Interim City Manager. The Employee represents that they have the necessary and specialized experience, skills, and expertise required to serve as the City's Interim City Manager and is willing and capable to immediately begin such an appointment for a temporary and interim period.

C. The City Council and Employee desire to establish a reasonable, professional and trustworthy temporary employment relationship, subject to the terms and conditions set forth in this Agreement pertaining to compensation and benefits, performance evaluations, and related matters.

BASED UPON THE FOREGOING, THE CITY AND EMPLOYEE AGREE AS FOLLOWS:

1. **Employee Appointed**.

(a) The City, by and through the Milpitas City Council, appoints and employs Employee as Interim City Manager, and Employee continues to accept the appointment and employment as of the Effective Date.

2. **Duties of Employee**.

(a) Employee shall perform the duties established for the City Manager by State law, the Milpitas Municipal Code, the City Manager job description, the directions of the City Council, or as otherwise provided by law, ordinance, or regulation. The provisions of the Municipal Code pertaining to the City Manager and the City Manager job description, as may be amended from time to time, are attached hereto as Exhibit A and are hereby made a part of this Agreement. Such duties shall include, but not be limited to:

(i) To see that all laws and ordinances of the City are duly enforced and that all franchises, permits, licenses and privileges granted by the City are faithfully performed and observed;

(ii) To control, order and give directions to all directors of departments and to subordinate officers and employees of the City under their jurisdiction through their department directors, and to transfer employees from one department to another;

(iii) To attend all meetings of the City Council unless excused there from by the City Council;

(iv) To recommend to the City Council for adoption such measures and ordinances as they deems necessary or expedient;

(v) To keep the City Council at all times fully advised as to the financial conditions and needs of the City;

(vi) After receiving feedback from the City Council, to prepare and submit to the City Council an annual recommended budget and to administer the adopted budget;

(vii) To purchase or cause to be purchased all supplies for all of the departments or divisions of the City. No expenditures, except those for legal services, shall be submitted or recommended to the City Council except on report and approval of the City Manager;

DRAFT

(viii) To make investigation into the affairs of the City and any department or division thereof and any Contract or the proper performance of any obligation running to the City;

(ix) To oversee and direct the investigation of all complaints in relation to matters concerning the administration of the government of the City and in regard to the services maintained by public utilities in the City and to see that all franchises, permits and privileges granted by the City are faithfully observed;

(x) To execute general supervision over all public buildings, public parks, streets and other public property which are under the control and jurisdiction of the City Council;

(xi) To devote their entire working time, thought and energy to the duties and interests of the City;

(xii) When acting in their official capacity as City Manager, respond to all media and community inquiries in alignment with the City Council's approved values, visions, and goals, and exclusively in the best interests of the City;

(xiii) To make reports and initiate recommendations as may be desirable or as requested by the City Council; and

(xiv) To perform such other duties and exercise such other powers as may be delegated to them from time to time by ordinance, resolution or other action of the City Council.

(b) Full Energy and Skill. Employee shall faithfully, diligently, and to the best of Employee's abilities, perform all duties that may be required under this Agreement. Employee agrees that Employee has a duty of loyalty and a general fiduciary duty to the City. Employee shall devote the whole of Employee's working time, skill, experience, knowledge, ability, labor, energy, attention, and best effort exclusively to the City's business and affairs. Prior to undertaking any secondary activities for which Employee receives compensation,

Employee shall disclose those activities to the Council.

(c) No Conflict. Employee shall not engage in any employment, activity, consulting service, or other enterprise, for compensation or otherwise, which is actually or potentially in conflict with, inimical to, or which interferes with the performance of Employee's duties. Further, Employee shall not, during the term of this Agreement, individually, as a partner, joint venture, officer or shareholder, invest or participate in any business venture conducting business in the corporate limits of the City of Milpitas.

(d) Outside Activities. Consistent with subdivision 2(b) above, the Employee's primary employment is with the City. Any outside activities for which the Employee receives compensation from a third party shall be disclosed, in advance, to the City Council. Employee is expected to take personal leave (i.e., vacation time) for any outside activities of this nature.

3. **Hours of Work**.

The Interim City Manager is an exempt employee, and is expected to engage in those hours of work that are necessary to fulfill the obligations of the City Manager's position. The Interim City Manager does not have set hours of work as the Interim City Manager but is expected to be reasonably available to the City Council with support and coverage by the Assistant or Deputy City Manager at all times. It is recognized that the Interim City Manager must devote a great deal of time to the business of the City outside of the city's customary office hours, and to that end the Interim City Manager's schedule of work each day and week shall vary in accordance with the work required to be performed and in accordance with any specific direction provided by the City Council.

4. **Term**.

The term of this Agreement shall be from the Effective Date until a permanent City Manager assumes that office unless terminated earlier by either Party in accordance with the provisions set forth in Section 14, or unless extended by the City as authorized by Section 6.

\ \ \

5. **No Guarantee of Further Employment**.

The City and Employee mutually agree that nothing contained in this Agreement, or this interim appointment, shall obligate or otherwise affect the selection of the permanent City Manager. Employee may apply for the permanent City Manager position upon the same terms and conditions as offered to any other applicants. The City, including through the City Council, shall retain full and unfettered discretion in the selection of the permanent City Manager and the process for selection of the permanent City Manager. Outside of regularly applying for the permanent City Manager position, the Employee shall not interfere, influence, or otherwise attempt to gain competitive advantage over other applicants. If Employee is selected as the permanent City Manager, the Parties intend that a new employment agreement, separate and distinct from this Agreement, will be entered into between the Parties regarding that employment engagement.

6. **Transition**.

To ensure a smooth and seamless transition upon the appointment of a permanent City Manager, Employee shall perform their functions as Interim City Manager so that ongoing work and responsibilities can be transitioned if a different permanent City Manager is selected. The City at the City Council's election shall have an option to continue to retain Employee's services for an additional period of up to two (2) weeks beyond the initial term of this Agreement with the same salary and benefits in this Agreement. Employee shall not have the title nor authority and responsibilities of the City Manager position during this option period.

7. **City Council Commitments.**

The City Council shall abide by all provisions of the City's Municipal Code regarding the administration of personnel issues, with a copy of the relevant provisions of the City's Municipal Code, as may be amended from time to time, attached hereto as Exhibit A.

8. **Performance Evaluation.**

During this interim appointment, the Interim City Manager shall meet with all members of the City Council to obtain clear goals and objectives for a sixty (60) day performance evaluation. Based on

these meetings, the City Manager will distribute the proposed goals and objectives and present them for approval at the first available City Council meeting following completion of the referenced individual Councilmember meetings. Thereafter, the Employee will be subject to the City Council's evaluation of performance after sixty (60) days of established goals and objectives. The Council can establish a performance evaluation at any such other time(s) selected by the City Council.

9. Compensation.

(a) Base Salary. Employee shall receive the annual Base Salary of Three Hundred Seventy Nine Thousand Dollars ($379,000), payable on a pro-rata basis in the same manner as all full time City employees, and subject to all applicable payroll taxes and withholdings.

(b) COLA Adjustments/Compaction. This interim and temporary appointment does not qualify for a cost of living adjustment or other non-merit based salary increase provided to other miscellaneous unrepresented executive staff, unless determined by the City Council.

(c) Reduction in Salary or Benefits. If the City reduces the Employee's Base Salary, or any benefit described in Sections 10 to 13 of this Agreement, in a percentage that is greater than the average reduction of all miscellaneous unrepresented executive staff, such action shall constitute a termination of this Agreement without Cause under Section 14 of this Agreement.

10. **Regular Benefits and Allowances.**

(a) Employer agrees to provide and pay the City allowance for vision, dental and comprehensive medical health insurance for Employee and their dependents, if any, equal to that which is provided to all other full-time miscellaneous unrepresented executive staff of Employer. The City contribution toward health insurance shall be equal to that which is provided to all other miscellaneous unrepresented executive staff of Employer as specified in the applicable Unrepresented Employee Benefit Handbook ("Benefit Handbook"), dated July 1, 2024, or any amendment thereto or replacement thereof. Similarly, Employee shall receive short-term and long-term disability insurance coverage while this Agreement is in

force, subject to any contributions required of unrepresented miscellaneous unrepresented executive staff.

11. **Deferred Compensation**.

(a) Employee waives deferred compensation as provided for unrepresented employees in the Benefit Handbook.

12. **Retirement Benefits**.

Employer agrees to enroll Employee into the California Public Employees Retirement System ("CalPERS") consistent with other City employees.

13. **Additional Benefits and Allowances.**

In addition to the benefits already specified in this Agreement, Employee shall receive the same benefits afforded to miscellaneous unrepresented executive staff, including and not limited to:

(a) Leaves

(i) Vacation. Employee shall accrue and be eligible to use vacation days in accordance with the City's established vacation policy.

(ii) Sick Leave. Employee shall be entitled to use and accrue sick leave in accordance with established City policy.

(iii) Management Incentive Program (MIP). Employee shall accrue Management Incentive Paid Leave as provided for executive staff in the Benefits Handbook. Employee shall additionally receive 40 hours of such Management Leave upon the Effective Date.

(iv) Delayed Use. Notwithstanding any other City policy, Employee may immediately use such Vacation, Sick, and MIP leave as accrued.

(b) Automobile. Employee shall receive a monthly vehicle allowance of five hundred fifty dollars ($550.00) per month, for automobile trips which shall be equal to that which is provided to all other miscellaneous unrepresented executive staff of Employer as specified in the applicable Benefits Handbook, or any amendment thereto or replacement thereof.

(c) Cellular Phone. Employee shall receive a City cell phone for use for City work purposes in compliance with the City's Cellular Devices policy dated July 19, 2023, as may be amended.

14. Termination of Employment.

(a) No Property Interest/Cause Defined. Employee understands and agrees that Employee has no constitutionally-protected property or other interest in Employee's employment as Interim City Manager. Employee understands and agrees that Employee works at the will and pleasure of the City Council, and that Employee may be terminated, or asked to resign, at any time, with or without Cause, by a majority vote of its members. Notice of termination shall be provided to the Interim City Manager in writing. As used in this Agreement, Cause shall only mean any of the following:

(i) Conviction of, or plea of guilty or *nolo contendere* to, any crime or offense (other than minor traffic violations or similar offenses) which is likely to have a material adverse impact on the City or on the Employee's reputation;

(ii) Proven and willful failure of the Employee to observe or perform any of their duties and obligations as established in this Agreement, if that failure continues for a period of thirty (30) business days from the date of their receipt of notice from the City Council specifying the acts or omissions deemed to amount to that failure;

(iii) Conviction of any crime involving an "abuse of office or position," as that term is defined in Government Code Section 53243.4;

(iv) Repeated failure to carry out a directive or directives of the City Council made by the City Council as a body at a Brown Act compliant meeting;

(v) Any grossly negligent action or inaction by Employee that materially and adversely: (a) impedes or disrupts the operations of City or its organizational units; (b) is detrimental to employees or public safety; or (c) violates the City's properly established rules or procedures; and

(vi) Evidence of interference, influence, or other competitive advantage gained in contravention of Section 5.

(b) Notice Required Of Employee. Employee may voluntarily terminate employment at any time by giving not less than sixty (60) days written notice of a date certain for the conclusion of their employment. The date specified in such notice may not be modified without the written consent of the City Council.

(c) Communications Upon Termination. In the event the Employer terminates the Employee for any reason or no reason, the Employer and Employee agree to undertake reasonable efforts to issue a joint press release or statement, the content of which is mutually agreeable to the Employer and Employee. The joint press release or statement shall not contain any text or information that is reasonably considered to be disparaging to either party. For purposes of this subdivision only, "party" includes City Council members in office at the time of termination and miscellaneous unrepresented executive employees. If the parties are able to agree on a joint statement, either party may verbally repeat the substance of the joint press release or statement in response to any inquiry.

15. **Statutory Requirements.**

(a) This Agreement shall be deemed to incorporate by reference the provisions of Sections 53243 *et seq.* of the Government Code, as it may be amended or renumbered.

16. **Payment of Expenses of Employment.**

The City shall pay the following usual and customary employment expenses:

(a) The cost of any fidelity or other bonds required by law for the City Manager.

(b) Subject to Section 14 and 15 of this Agreement, the cost to defend and indemnify Employee as required by the California Government Claims Act (Government Code §810 *et seq*.), or otherwise. City will determine, in its sole discretion, whether to compromise and settle any such claim or suit against Employee and the amount of any settlement or judgment rendered thereon.

(c) Subject to budget approval, the cost of attending conferences or other events (i.e. retirement dinners, out-of-town meetings, professional memberships and seminars, etc.) necessary for the proper discharge of Employee's duties. The City will not reimburse Employee for any expenses related to membership in service clubs and will not encourage or require service club membership.

17. Miscellaneous.

(a) Notices. Notices given under this Agreement shall be in writing and shall be:

(i) served personally; or

(ii) sent by facsimile (provided a hard copy is mailed within one (1) business day); or

(iii) delivered by first-class United States mail, certified, with postage prepaid and a return receipt requested; or

(iv) Sent by Federal Express, or some equivalent private overnight delivery service. Notices shall be deemed received at the earlier of actual receipt or three (3) days following deposit in the United States mail, postage prepaid.

Notices shall be deemed received at the earlier of actual receipt or three (3) days following deposit in the United States mail, postage prepaid. Notices shall be directed to the addresses shown below, provided that a party may change such party's address for notice by giving written notice to the other party in accordance with this subsection.

CITY:	EMPLOYEE:
City of Milpitas Attn: Mayor	_____
455 E. Calaveras Blvd.	_____
Milpitas, CA 95035	_____

(b) Compliance with Government Code §§53243, 53243.1, & 53243.2. If Employee is convicted of a crime involving an abuse of the Employee's office or position, all of the following shall apply:

(i) if Employee is provided with administrative leave pay pending an investigation, Employee shall be required to fully reimburse the City for such amounts paid;

DRAFT

(ii) if the City pays for the criminal legal defense of Employee (which would be in its sole discretion, as it is not generally required to pay for a criminal defense), Employee shall be required to fully reimburse City such amounts paid; and

(iii) if this Agreement is terminated, any cash settlement related to the termination that Employee may receive from the City shall be fully reimbursed to the City or void if not yet paid to Employee.

(iv) For this subsection, "abuse of office or position" means either (1) an abuse of public authority, including waste, fraud, and violation of the law under color of authority, or (2) a crime against public justice, including but not limited to a crime described in Title 7 (commencing with Section 92) of Part 1 of the Penal Code.

(c) Entire Agreement/Amendment. This Agreement constitutes the entire understanding and agreement between the parties as to those matters contained in it, and supersedes any and all prior or contemporaneous agreements, representations and understandings of the parties. This Agreement may be amended at any time by mutual agreement of the parties, but any such amendment must be in writing, dated, and signed by the parties and attached hereto.

(d) Severability. In the event any portion of this Agreement is declared void, such portion shall be severed from this Agreement and the remaining provisions shall remain in effect, unless the result of that severability would be to substantially alter this Agreement or the obligations of the parties, in which case this Agreement shall be immediately terminated.

(e) Waiver. Any failure of a party to insist upon strict compliance with any term, undertaking, or condition of this Agreement shall not be deemed to be a waiver of such term, undertaking, or condition. To be effective, a waiver must be in writing, signed and dated by the parties.

(f) Representation by Counsel. The parties acknowledge and agree that they were, or had the opportunity to be, represented individually by legal counsel with respect to the matters that are the subject of this Agreement and that they are fully advised with respect to their respective rights and obligations resulting from signing this Agreement.

(g) Neutral Interpretation. The Parties agree that the terms of this Agreement resulted from arm's length negotiation between them and is not a contract of adhesion. This Agreement will be interpreted neutrally as if both Parties jointly drafted and prepared all provisions and will not be construed in favor or against either Party by reason of actual authorship.

(h) Governing Law and Venue. This Agreement shall be governed by and construed in accordance with the laws of the State of California. Employee and City agree that venue for any dispute shall be in Santa Clara County, California.

(i) Section Headings. The headings on each of the sections and subsections of this Agreement are for the convenience of the parties only and do not limit or expand the contents of any such section or subsection.

(j) No Assignment. Employee may not assign this Agreement in whole or in part.

(k) Execution Electronically and in Counterparts. This Agreement may be executed electronically and/or in one or more counterparts, each of which shall be deemed an original, but all of which together shall constitute one and the same instrument. A photocopy, facsimile, or electronic transmission of the Agreement, including signatures, shall be deemed to constitute evidence of the Agreement having been executed.

[REMAINDER OF PAGE INTENTIONALLY LEFT BLANK]
[SIGNATURES ON NEXT PAGE]

DRAFT

SIGNATURE PAGE FOR AGREEMENT FOR EMPLOYMENT AGREEMENT BETWEEN THE CITY OF MILPITAS AND _____

IN WITNESS WHEREOF, the Parties have executed and entered into this Agreement effective as of the Effective Date stated in the Agreement.

Dated: _____ CITY OF MILPITAS

By_____

Mayor

Dated: _____ EMPLOYEE

By_____

[NAME]

Approved as to Form:

_____

Acting City Attorney

DRAFT